TYPE CSD-AA

Aluminum Bolted Bus Support For Cable or Pipe

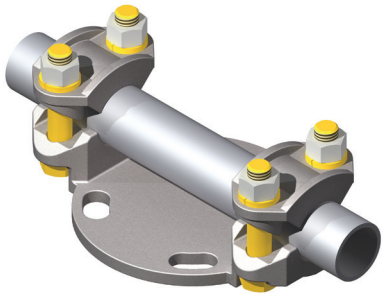

Material

Aluminum Alloy

Hardware

Yellow anodized aluminum nuts, bolts, and lockwashers.
Galvanized steel base mounting hardware is included.

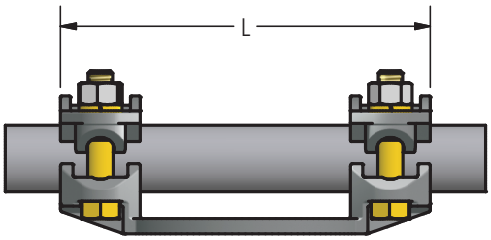

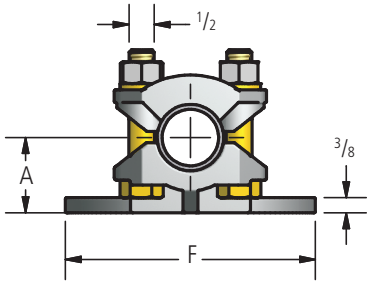

Ordering Information

CATALOG NUMBER	Bolt Mount Circle	AAC CABLE RANGE		ACSR CABLE RANGE		DIMENSIONS IN INCHES		
		MIN	MAX	MIN	MAX	A	F	L
CSD21-3-AA	3	4SOL	4/0STR	6	4/0	1 1/8	4 1/4	7 1/8
CSD21-5-AA	5	4SOL	4/0STR	6	4/0	1 1/8	6 1/4	9 3/8
CSD55-3-AA	3	250	550	266.8	477	1 3/8	4 1/4	7 1/8
CSD55-5-AA	5	250	550	266.8	477	1 3/8	6 1/4	9 3/8
CSD111-3-AA	3	600	1113	556.5	1033.5	1 1/2	4 1/4	7 1/8
CSD111-5-AA	5	600	1113	556.5	1033.5	1 5/8	6 1/4	9 3/8
CSD200-3-AA	3	1200	2000	1113	1780	1 3/4	4 1/4	7 3/4
CSD200-5-AA	5	1200	2000	1113	1780	1 7/8	6 1/4	9 1/4

AFL's Dossert® product line offers a wide range of substation accessories in low voltage up to 765 kV applications in bronze or aluminum materials.

© 2011, AFL, all rights reserved. PP-3-00293, Rev 2, 9.25.2025
Specifications are subject to change without notice.

TYPE PB-AA, PBP-AA

Bus Support With Two Unit Caps

A two unit cap clamping bus support for mounting on insulator bolt circle. Type PB clamps bus directly to insulator while type PBP is provided with two independent matching bus saddles. Available for either cap or base mounting. Unless otherwise specified supports are furnished for cap mounting as illustrated.

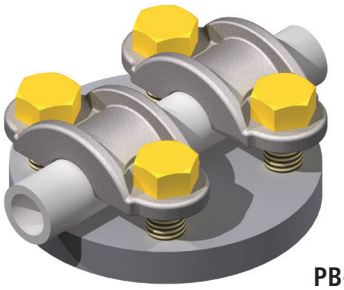

PB-AA

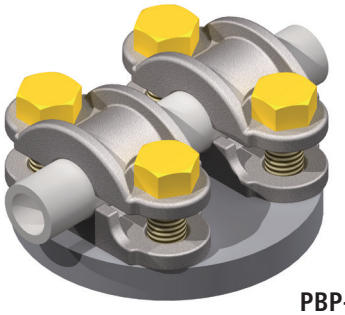

PBP-AA

Material

Aluminum Alloy

Hardware

Yellow anodized aluminum bolts, nuts, and lockwashers.

Note

For a 1" SPS pipe, 3" bolt circle, and saddle order PBP100-3-AA.

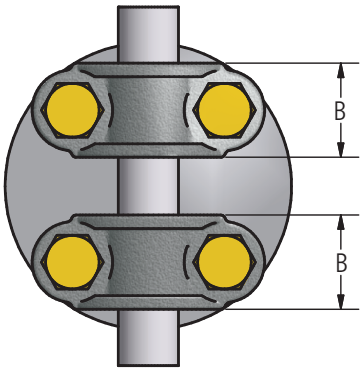

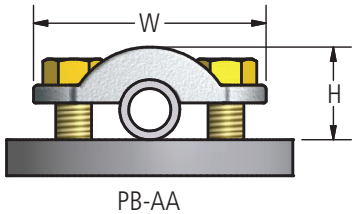

PB-AA

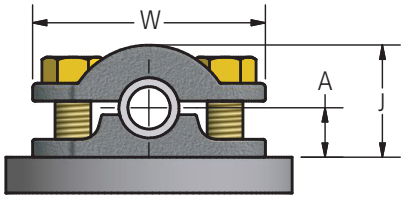

PBP-AA

Ordering Information

CATALOG NUMBER		SPS	BOLT CIRCLE	DIMENSIONS IN INCHES					BOLT SIZE
				A	B	H	J	W	
PB50-3-AA	PBP50-3-AA	1/2	3	3/4	1 5/16	1 3/8	1 11/16	3 1/4	1/2
PB50-5-AA	PBP50-5-AA	1/2	5	3/4	1 3/8	1 1/2	1 13/16	4 15/16	5/8
PB75-3-AA	PBP75-3-AA	3/4	3	7/8	1 5/16	1 9/16	1 15/16	3 1/4	1/2
PB75-5-AA	PBP75-5-AA	3/4	5	7/8	1 3/8	1 11/16	2 1/16	4 15/16	5/8
PB100-3-AA	PBP100-3-AA	1	3	1	1 1/2	1 3/4	2 1/8	3 1/4	1/2
PB100-5-AA	PBP100-5-AA	1	5	1	1 5/8	2	2 5/16	4 15/16	5/8
PB125-3-AA	PBP125-3-AA	1 1/4	3	1 1/8	1 1/2	2 1/8	2 7/16	3 1/4	1/2
PB125-5-AA	PBP125-5-AA	1 1/4	5	1 1/8	1 5/8	2 3/8	2 11/16	4 15/16	5/8
PB150-5-AA	PBP150-5-AA	1 1/2	5	1 1/4	1 3/4	2 7/16	2 3/4	4 15/16	5/8
PB200-5-AA	PBP200-5-AA	2	5	1 1/2	1 3/4	2 3/4	3 1/16	4 15/16	5/8
PB250-5-AA	PBP250-5-AA	2 1/2	5	1 3/4	1 7/8	3 5/16	3 5/8	4 15/16	5/8

AFL's Dossert® product line offers a wide range of substation accessories in low voltage up to 765 kV applications in bronze or aluminum materials.

© 2011, AFL, all rights reserved. PP-3-00390, Rev 1, 9.26.2025
Specifications are subject to change without notice.

TYPE PL-AA

Pipe Bus Support Slide or Tight Fit

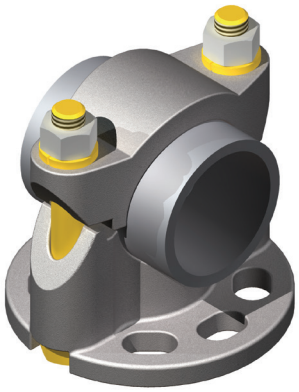

Material

Aluminum Alloy

Hardware

Yellow anodized aluminum bolts, nuts, and lockwashers.
Galvanized steel base mounting hardware is included.

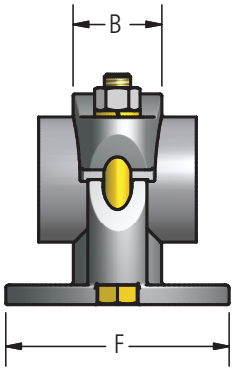

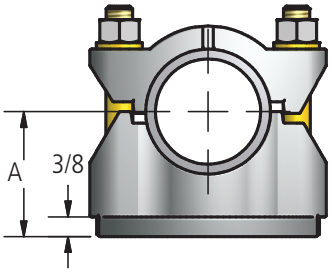

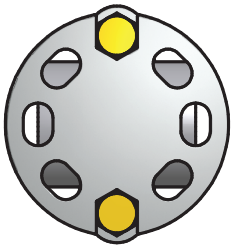

Ordering Information

CATALOG NUMBER	SPS	BOLT CIRCLE	DIMENSIONS IN INCHES			
			A	B	F	Bolt Size
PL75-3-AA	3/4	3	1 3/8	1 1/2	4 1/4	1/2
PL75-5-AA	3/4	5	1	1 1/2	6 1/4	1/2
PL100-3-AA	1	3	1 5/8	1 1/2	4 1/4	1/2
PL100-5-AA	1	5	1 1/8	1 1/2	6 1/4	1/2
PL125-3-AA	1 1/4	3	1 3/4	1 11/16	4 1/4	1/2
PL125-5-AA	1 1/4	5	1 3/8	1 11/16	6 1/4	1/2
PL150-3-AA	1 1/2	3	2	1 11/16	4 1/4	1/2
PL150-5-AA	1 1/2	5	1 1/2	1 11/16	6 1/4	1/2
PL200-3-AA	2	3	2 3/8	1 11/16	4 1/4	1/2
PL200-5-AA	2	5	2 1/4	1 11/16	6 1/4	1/2
PL250-3-AA	2 1/2	3	2 5/8	1 3/4	4 1/4	1/2
PL250-5-AA	2 1/2	5	2 1/2	1 3/4	6 1/4	1/2
PL300-3-AA	3	3	2 7/8	1 3/4	6 1/4	5/8
PL300-5-AA	3 1/2	5	3	1 3/4	6 1/4	5/8

AFL's Dossert® product line offers a wide range of substation accessories in low voltage up to 765 kV applications in bronze or aluminum materials.

© 2011, AFL, all rights reserved. PP-3-00398, Rev 1, 9.26.2025
Specifications are subject to change without notice.

TYPE PLH-AA

Pipe Bus Support Sliding Ring

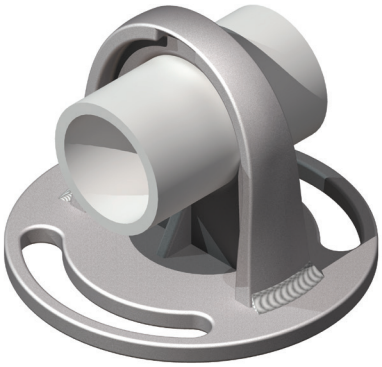

Material

Aluminum Alloy

Hardware

Galvanized steel mounting hardware included.

Note

For Chatter Spring, add -CH to catalog number. Example: PLH300-3-CH-AA

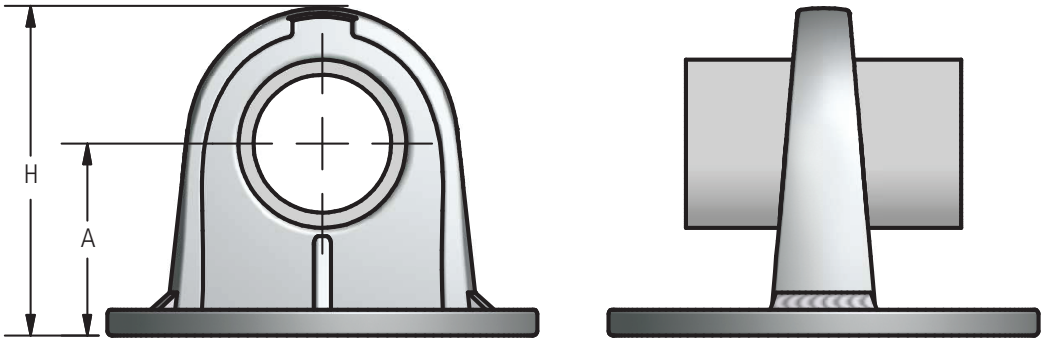

Ordering Information

CATALOG NUMBER	SPS	BOLT CIRCLE	DIMENSIONS IN INCHES	
			A	H
PLH50-3-AA	1/2	3	1-3/4	3
PLH50-5-AA	1/2	5	2-1/8	3-3/4
PLH75-3-AA	3/4	3	2	3-3/8
PLH75-5-AA	3/4	5	2-1/4	4-1/8
PLH100-3-AA	1	3	2	3-1/2
PLH100-5-AA	1	5	2-1/4	4-1/4
PLH125-3-AA	1-1/4	3	2-1/4	4
PLH125-5-AA	1-1/4	5	2-3/8	4
PLH150-3-AA	1-1/2	3	2-1/2	4-3/8
PLH150-5-AA	1-1/2	5	2-1/2	4-5/16
PLH200-3-AA	2	3	2-3/4	4-1/8
PLH200-5-AA	2	5	2-3/4	5-1/4
PLH250-3-AA	2-1/2	3	3-1/8	5-1/4
PLH250-5-AA	2-1/2	5	3-1/8	6
PLH300-3-AA	3	3	3-5/8	6-5/32
PLH300-5-AA	3	5	3-5/8	6-5/32
PLH350-3-AA	3-1/2	3	4	6-25/32
PLH350-5-AA	3-1/2	5	4	6-25/32
PLH350-7-AA	3-1/2	7	4-1/8	6-29/32
PLH400-3-AA	4	3	4-1/2	7-3/8
PLH400-5-AA	4	5	4-1/2	7-17/32
PLH500-3-AA	5	3	5	8-9/16
PLH500-5-AA	5	5	5	8-9/16
PLH500-7-AA	5	7	5-1/8	8-11/16
PLH600-5-AA	6	5	5-1/2	9-7/16

AFL's Dossert® product line offers a wide range of substation accessories in low voltage up to 765 kV applications in bronze or aluminum materials.

© 2011, AFL, all rights reserved. PP-3-00400, Rev 8, 5.11.2026
Specifications are subject to change without notice.

TYPE PSC-AA

Pipe Bus Support Coupler

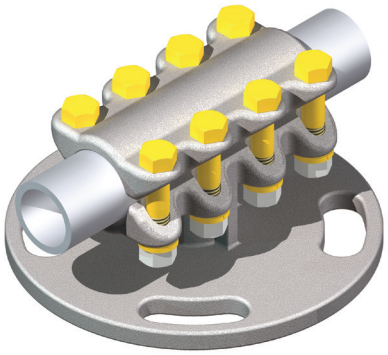

A bus support coupler for joining and supporting two tubular buses on a post type insulator. Designed for a high resistance to impact or sustained cantilever and torsional stresses. Nuts and bolts are furnished for base mounting.

Material

Aluminum Alloy

Hardware

Yellow anodized aluminum bolts, nuts, and lockwashers.

Note

For base mounting dimensions and hardware see page 3 in the general catalog index.

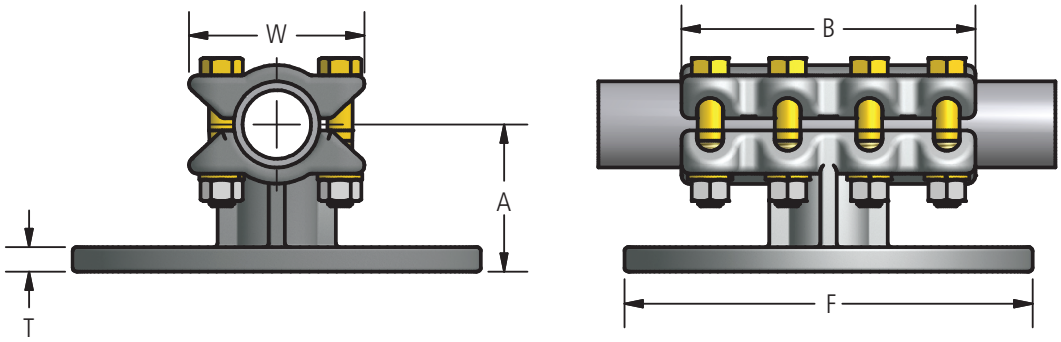

Ordering Information

CATALOG NUMBER	SPS	BOLT CIRCLE	DIMENSIONS IN INCHES					
			A	B	F	T	W	BOLT SIZE
PSC50-3-AA	1/2	3	1 3/4	5 1/4	4 1/4	3/8	2 3/4	1/2
PSC50-5-AA	1/2	5	2 1/8	5 1/4	6 1/4	3/8	2 3/4	1/2
PSC75-3-AA	3/4	3	2	5 3/4	4 1/4	3/8	2 13/16	1/2
PSC75-5-AA	3/4	5	2 1/4	5 3/4	6 1/4	3/8	2 13/16	1/2
PSC100-3-AA	1	3	2	5 3/4	4 1/4	3/8	3 1/16	1/2
PSC100-5-AA	1	5	2 1/4	5 3/4	6 1/4	3/8	3 1/16	1/2
PSC125-3-AA	1 1/4	3	2 1/4	6 1/4	4 1/4	3/8	3 13/32	1/2
PSC125-5-AA	1 1/4	5	2 3/8	6 1/4	6 1/4	3/8	3 13/32	1/2
PSC150-3-AA	1 1/2	3	2 1/2	6 1/4	4 1/4	3/8	4 5/16	1/2
PSC150-5-AA	1 1/2	5	2 1/2	6 1/4	6 1/4	3/8	4 5/16	1/2
PSC200-3-AA	2	3	2 3/4	6 3/4	4 1/4	3/8	4 1/4	1/2
PSC200-5-AA	2	5	2 3/4	6 3/4	6 1/4	3/8	4 1/4	1/2
PSC250-3-AA	2 1/2	3	3 1/8	6 3/4	4 1/4	3/8	4 5/8	1/2
PSC250-5-AA	2 1/2	5	3 1/8	6 3/4	6 1/4	3/8	4 5/8	1/2
PSC300-3-AA	3	3	3 5/8	7 1/4	4 1/4	3/8	5 1/2	5/8
PSC300-5-AA	3	5	3 5/8	7 1/4	6 1/4	3/8	5 1/2	5/8
PSC350-3-AA	3 1/2	3	4	7 1/4	4 1/4	7/16	6	5/8
PSC350-5-AA	3 1/2	5	4	7 1/4	6 1/4	7/16	6	5/8
PSC400-3-AA	4	3	4 1/2	7 1/4	4 1/4	7/16	6 1/2	5/8
PSC400-5-AA	4	5	4 1/2	7 1/4	6 1/4	7/16	6 1/2	5/8

AFL's Dossert® product line offers a wide range of substation accessories in low voltage up to 765 kV applications in bronze or aluminum materials.

© 2011, AFL, all rights reserved. PP-3-00403, Rev 1, 9.26.2025
Specifications are subject to change without notice.

TYPE PSD-AA, PSD-CH-AA

Bus Support, Pipe, Slide or Tight Fit

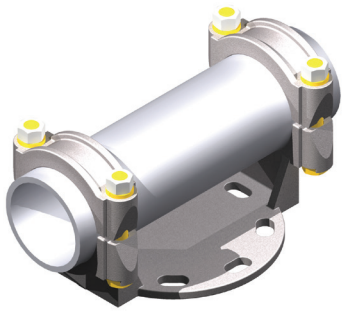

Bolted clamp type support, for pipe-to-pipe connection, with reversible tight or rigid fit.

Material
Aluminum Alloy

Hardware
Yellow anodized aluminum bolts, nuts and lockwashers

Galvanized steel base mounting hardware included

Notes
- For Chatter Spring, add "-CH" to catalog number. EX: PSD400-3-CH-AA
- For Grade Five Galvanized Steel Hardware, add "-GS5" to catalog number. EX: PSD400-5-AA-GS5
- For Stainless Steel bolts, lockwashers and Everdur nuts, add "-SSHBN" to catalog number. EX: PSD400-3-AA-SSBHN
- For base mounting dimensions and hardware, see page 3 in the general catalog index of AFL's Substation Catalog or page 46 of the Swage Accessories Catalog.

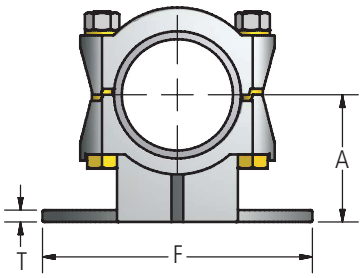

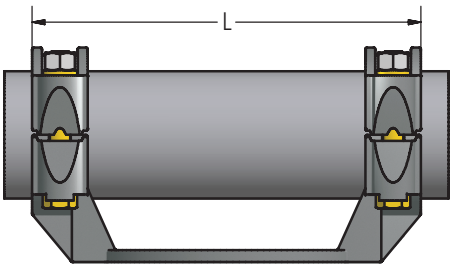

Ordering Information

Catalog Number		SPS	Bolt Circle	Dimensions (Inches)				Bolt Size
Standard	Chatter Spring			A	F	L	T	
PSD75-3-AA	PSD75-3-CH-AA	3/4	3	2	4-1/4	6-3/4	3/8	1/2
PSD75-5-AA	PSD75-5-CH-AA	3/4	5	2-1/4	6-1/4	9	3/8	1/2
PSD100-3-AA	PSD100-3-CH-AA	1	3	2	4-1/4	7	3/8	1/2
PSD100-5-AA	PSD100-5-CH-AA	1	5	2-1/4	6-1/4	9	3/8	1/2
PSD125-3-AA	PSD125-3-CH-AA	1-1/4	3	2-1/4	4-1/4	7-1/4	3/8	1/2
PSD125-5-AA	PSD125-5-CH-AA	1-1/4	5	2-3/8	6-1/4	9-1/2	3/8	1/2
PSD150-3-AA	PSD150-3-CH-AA	1-1/2	3	2-1/2	4-1/4	7-1/4	3/8	1/2
PSD150-5-AA	PSD150-5-CH-AA	1-1/2	5	2-1/2	6-1/4	9-1/2	3/8	1/2
PSD200-3-AA	PSD200-3-CH-AA	2	3	2-3/4	4-1/4	7-1/4	3/8	1/2
PSD200-5-AA	PSD200-5-CH-AA	2	5	2-3/4	6-1/4	9-1/2	3/8	1/2
PSD250-3-AA	PSD250-3-CH-AA	2-1/2	3	3-1/8	4-1/4	7-3/4	3/8	1/2
PSD250-5-AA	PSD250-5-CH-AA	2-1/2	5	3-1/8	6-1/4	10	3/8	1/2
PSD300-3-AA	PSD300-3-CH-AA	3	3	3-5/8	4-1/4	7-3/4	3/8	5/8
PSD300-5-AA	PSD300-5-CH-AA	3	5	3-5/8	6-1/4	10	3/8	5/8
PSD300-7-AA	PSD300-7-CH-AA	3	7	3-5/8	8-1/2	12-1/4	1/2	5/8
PSD350-3-AA	PSD350-3-CH-AA	3-1/2	3	4	4-1/4	7-3/4	3/8	5/8
PSD350-5-AA	PSD350-5-CH-AA	3-1/2	5	4	6-1/4	10	3/8	5/8
PSD350-7-AA	PSD350-7-CH-AA	3-1/2	7	4	8-1/2	12	1/2	5/8

AFL's Dossert® product line offers a wide range of substation accessories in low voltage up to 765 kV applications in bronze or aluminum materials.

continued

© 2011, AFL, all rights reserved. PP-3-00405 , Revision 5, 7.01.2026
Specifications are subject to change without notice.

TYPE PSD-AA, PSD-CH-AA

Bus Support, Pipe, Slide or Tight Fit

Ordering Information

Catalog Number		SPS	Bolt Circle	Dimensions (Inches)				Bolt Size
Standard	Chatter Spring			A	F	L	T	
PSD400-3-AA	PSD400-3-CH-AA	4	3	4-1/2	4-1/4	7-3/4	1/2	5/8
PSD400-5-AA	PSD400-5-CH-AA	4	5	4-1/2	6-1/4	10	3/8	5/8
PSD400-7-AA	PSD400-7-CH-AA	4	7	4-1/2	8-1/2	12-1/4	5/8	5/8
PSD450-3-AA	PSD450-3-CH-AA	4-1/2	3	4-3/4	4-1/4	8	1/2	5/8
PSD450-5-AA	PSD450-5-CH-AA	4-1/2	5	4-3/4	6-1/4	10	1/2	5/8
PSD450-7-AA	PSD450-7-CH-AA	4-1/2	7	4-3/4	8-1/2	12-3/4	1/2	5/8
PSD500-3-AA	PSD500-3-CH-AA	5	3	5	4-1/4	8	7/16	5/8
PSD500-5-AA	PSD500-5-CH-AA	5	5	5	6-1/4	10	1/2	5/8
PSD500-7-AA	PSD500-7-CH-AA	5	7	5	8-1/2	12-3/4	5/8	5/8
PSD600-3-AA	PSD600-3-CH-AA	6	3	5-1/2	4-1/4	8-1/4	1/2	5/8
PSD600-5-AA	PSD600-5-CH-AA	6	5	5-1/2	6-1/4	10-1/2	1/2	5/8
PSD600-7-AA	PSD600-7-CH-AA	6	7	5-1/2	8-1/2	12-3/4	5/8	5/8
PSD800-5-AA	PSD800-5-CH-AA	8	5	6-7/8	6-1/4	10-1/2	1/2	5/8
PSD800-7-AA	PSD800-7-CH-AA	8	7	6-7/8	8-1/2	12-3/4	1/2	5/8

© 2011, AFL, all rights reserved. PP-3-00405 , Revision 5, 7.01.2026
Specifications are subject to change without notice.

TYPE PSDC-AA

Bus Support, Pipe, Slide or Tight Fit

A bus support coupler for joining and supporting two tubular buses on a post type insulator. Designed for high resistance to impact and cantilever and torsional stresses.

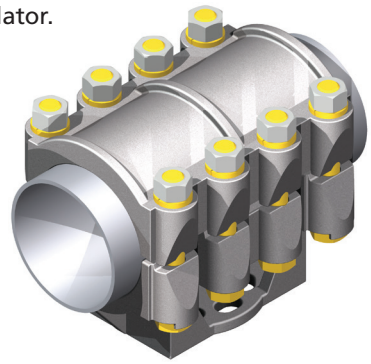

Material

Aluminum Alloy

Hardware

Yellow anodized aluminum nuts, bolts and lockwashers.
Galvanized steel mounting hardware included.

Note

For base mounting dimensions and hardware see page 3 in the general catalog index.

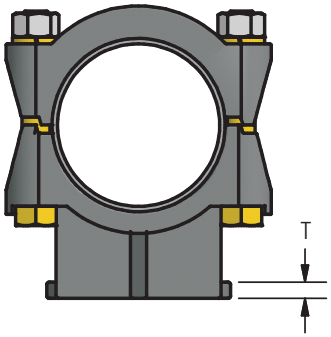

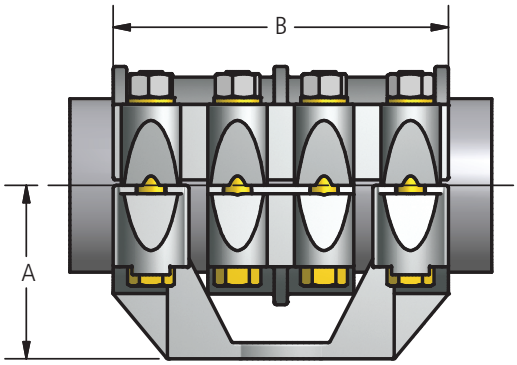

AFL's Dossert® product line offers a wide range of substation accessories in low voltage up to 765 kV applications in bronze or aluminum materials.

Ordering Information

Catalog Number	SPS	Bolt Circle	Dimensions in inches			
			A	B	T	Bolt Size
PSDC75-3-AA	3/4	3	2	6 3/4	3/8	1/2
PSDC75-5-AA	3/4	5	2 1/4	9	3/8	1/2
PSDC100-3-AA	1	3	2	7	3/8	1/2
PSDC100-5-AA	1	5	2 1/4	7 1/4	3/8	1/2
PSDC125-3-AA	1 1/4	3	2 1/4	7 1/4	3/8	1/2
PSDC125-5-AA	1 1/4	5	2 3/8	9 1/2	3/8	1/2
PSDC150-3-AA	1 1/2	3	2 1/2	7 1/4	3/8	1/2
PSDC150-5-AA	1 1/2	5	2 1/2	9 1/2	3/8	1/2
PSDC200-3-AA	2	3	2 3/4	7 1/4	3/8	1/2
PSDC200-5-AA	2	5	2 3/4	9 1/2	3/8	1/2
PSDC250-3-AA	2 1/2	3	3 1/8	7 3/4	3/8	1/2
PSDC250-5-AA	2 1/2	5	3 1/8	10	3/8	1/2
PSDC300-3-AA	3	3	3 5/8	7 3/4	3/8	5/8
PSDC300-5-AA	3	5	3 5/8	10	3/8	5/8
PSDC300-7-AA	3	7	3 5/8	12 1/4	1/2	5/8
PSDC350-3-AA	3 1/2	3	4	7 3/4	3/8	5/8
PSDC350-5-AA	3 1/2	5	4	10	3/8	5/8
PSDC350-7-AA	3 1/2	7	4	12 1/4	1/2	5/8
PSDC400-3-AA	4	3	4 1/2	7 3/4	1/2	5/8
PSDC400-5-AA	4	5	4 1/2	10	3/8	5/8
PSDC400-7-AA	4	7	4 1/2	12 1/4	1/2	5/8
PSDC500-3-AA	5	3	5	8 1/4	1/2	5/8
PSDC500-5-AA	5	5	5	10 1/2	1/2	5/8
PSDC500-7-AA	5	7	5	12 3/4	5/8	5/8
PSDC600-3-AA	6	3	5 1/2	7 3/4	1/2	5/8
PSDC600-5-AA	6	5	5 1/2	10	1/2	5/8
PSDC600-7-AA	6	7	5 1/2	12 3/4	5/8	5/8

© 2011, AFL, all rights reserved. PP-3-00406, Rev 2, 5.11.2026
Specifications are subject to change without notice.

TYPE PSDCS-AA



Bus Support, Pipe, Slide or Tight Fit

The bus support is supplied with chatter springs to reduce chatter. The support can be used as a sliding support or fixed support.

Material

Aluminum Alloy

Hardware

Yellow anodized aluminum nuts, bolts and lockwashers. Galvanized steel mounting hardware included.

Note

For base mounting dimensions and hardware see page 3 in the general catalog index.

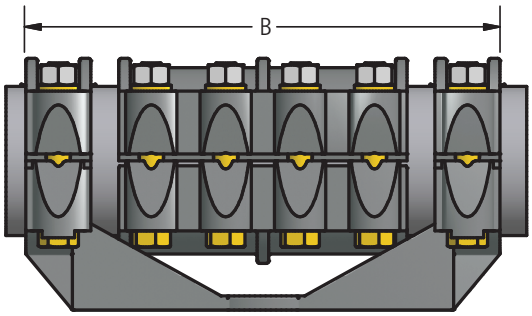

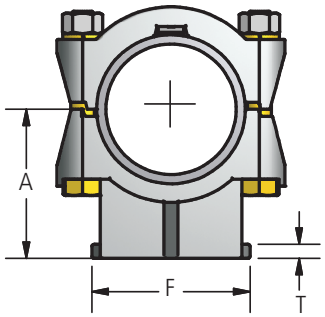

AFL's Dossert® product line offers a wide range of substation accessories in low voltage up to 765 kV applications in bronze or aluminum materials.

Ordering Information

CATALOG NUMBER	SPS	BOLT CIRCLE	DIMENSIONS IN INCHES				
			A	B	F	T	BOLT SIZE
PSDCS75-3-AA	3/4	3	2	6 3/4	4 1/4	3/8	1/2
PSDCS75-5-AA	3/4	5	2 1/4	9	6 1/4	3/8	1/2
PSDCS100-3-AA	1	3	2	7	4 1/4	3/8	1/2
PSDCS100-5-AA	1	5	2 1/4	7 1/4	6 1/4	3/8	1/2
PSDCS125-3-AA	1 1/4	3	2 1/4	7 1/4	4 1/4	3/8	1/2
PSDCS125-5-AA	1 1/4	5	2 3/8	9 1/2	6 1/4	3/8	1/2
PSDCS150-3-AA	1 1/2	3	2 1/2	7 1/4	4 1/4	3/8	1/2
PSDCS150-5-AA	1 1/2	5	2 1/2	9 1/2	6 1/4	3/8	1/2
PSDCS200-3-AA	2	3	2 3/4	7 1/4	4 1/4	3/8	1/2
PSDCS200-5-AA	2	5	2 3/4	9 1/2	6 1/4	3/8	1/2
PSDCS250-3-AA	2 1/2	3	3 1/8	7 3/4	4 1/4	3/8	1/2
PSDCS250-5-AA	2 1/2	5	3 1/8	10	6 1/4	3/8	1/2
PSDCS300-3-AA	3	3	3 5/8	7 3/4	4 1/4	3/8	5/8
PSDCS300-5-AA	3	5	3 5/8	10	6 1/4	3/8	5/8
PSDCS300-7-AA	3	7	3 5/8	12 1/4	8 1/2	1/2	5/8
PSDCS350-3-AA	3 1/2	3	4	7 3/4	4 1/4	3/8	5/8
PSDCS350-5-AA	3 1/2	5	4	10	6 1/4	3/8	5/8
PSDCS350-7-AA	3 1/2	7	4	12 1/4	8 1/2	1/2	5/8
PSDCS400-3-AA	4	3	4 1/2	7 3/4	4 1/4	1/2	5/8
PSDCS400-5-AA	4	5	4 1/2	10	6 1/4	1/2	5/8
PSDCS400-7-AA	4	7	4 1/2	12 1/4	8 1/2	1/2	5/8
PSDCS500-3-AA	5	3	5	8 1/4	4 1/4	1/2	5/8
PSDCS500-5-AA	5	5	5	10 1/2	6 1/4	1/2	5/8
PSDCS500-7-AA	5	7	5	12 3/4	8 1/2	5/8	5/8
PSDCS600-3-AA	6	3	5 1/2	7 3/4	4 1/4	1/2	5/8
PSDCS600-5-AA	6	5	5 1/2	10	6 1/4	1/2	5/8
PSDCS600-7-AA	6	7	5 1/2	12 1/4	8 1/2	1/2	5/8

© 2011, AFL, all rights reserved. PP-3-00407, Rev 1, 9.26.2025
Specifications are subject to change without notice.

TYPE PSS-AA, PSS-CH-AA

Pipe Bus Support Slide or Tight Fit

A high strength aluminum support for securing a tubular bus to a post or pedestal type insulator. Designed with a high resistance to impact and sustained cantilever and torsion stresses. Entire unit is non-magnetic and corrosion resistant. Nuts and bolts are furnished for base mounting or slotted mounting. Reversible cap permits rigid or slip fit on conductor.

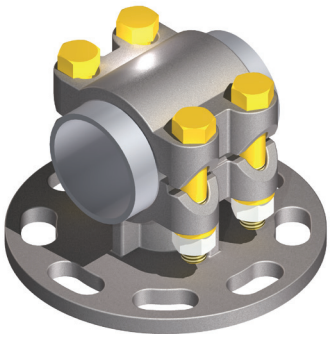

PSS-AA

Material

Aluminum Alloy

Hardware

Yellow anodized aluminum bolts, nuts, and lockwashers. Galvanized steel base mounting hardware is included.

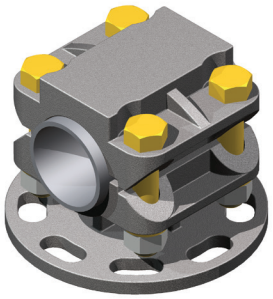

PSS-CH-AA

Note

For base mounting dimensions and hardware see page 3 in the general catalog index.

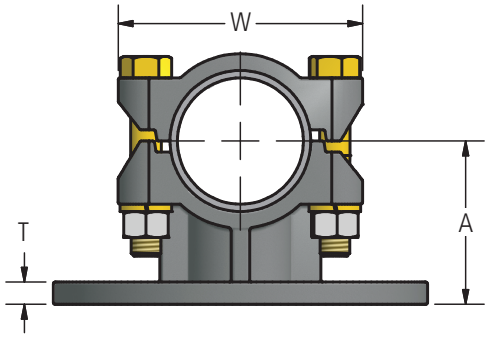

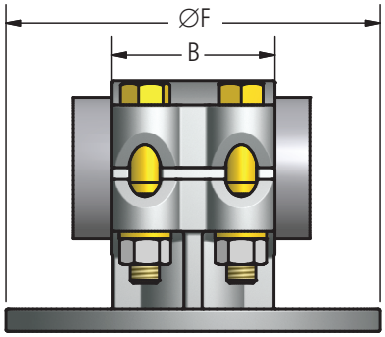

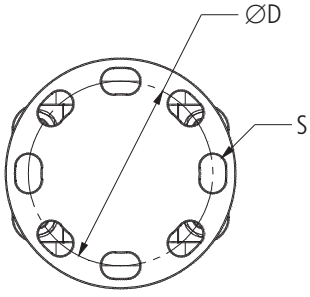

FIG. 1

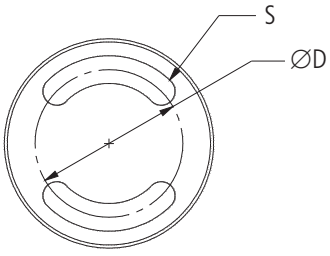

FIG. 2

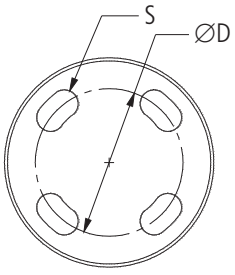

FIG. 3

AFL's Dossert® product line offers a wide range of substation accessories in low voltage up to 765 kV applications in bronze or aluminum materials.

© 2011, AFL, all rights reserved. PP-3-00413, Rev 6, 4.20.2026
Specifications are subject to change without notice.

TYPE PSS-AA, PSS-CH-AA

Pipe Bus Support Slide or Tight Fit

Ordering Information

CATALOG NUMBER		SPS	FIG. NO.	DIMENSIONS IN INCHES							BOLT SIZE
STANDARD	WITH CHATTER SPRING			A	B	D	F	S	T	W	
PSS50-3-AA	PSS50-3-CH-AA	1/2	2	1.75	2.06	3.00	4.25	0.50	0.38	2.41	1/2
PSS50-5-AA	PSS50-5-CH-AA	1/2	1	2.13	2.50	5.00	6.25	0.69	0.38	2.63	1/2
PSS75-3-AA	PSS75-3-CH-AA	3/4	1	2.00	2.75	3.00	4.25	0.56	0.38	2.81	1/2
PSS75-5-AA	PSS75-5-CH-AA	3/4	1	2.25	2.75	5.00	6.25	0.69	0.38	2.81	1/2
PSS100-3-AA	PSS100-3-CH-AA	1	1	2.00	2.75	3.00	4.25	0.56	0.38	3.06	1/2
PSS100-5-AA	PSS100-5-CH-AA	1	1	2.25	2.75	5.00	6.25	0.69	0.38	3.06	1/2
PSS125-3-AA	PSS125-3-CH-AA	1 1/4	3	2.25	3.00	3.00	4.25	0.56	0.38	3.75	1/2
PSS125-5-AA	PSS125-5-CH-AA	1 1/4	1	2.38	3.00	5.00	6.25	0.69	0.38	3.41	1/2
PSS150-3-AA	PSS150-3-CH-AA	1 1/2	1	2.50	3.00	3.00	4.25	0.56	0.38	3.66	1/2
PSS150-5-AA	PSS150-5-CH-AA	1 1/2	1	2.50	3.00	5.00	6.25	0.69	0.38	3.66	1/2
PSS200-3-AA	PSS200-3-CH-AA	2	1	2.75	3.25	3.00	4.25	0.56	0.38	4.13	1/2
PSS200-5-AA	PSS200-5-CH-AA	2	1	2.75	3.25	5.00	6.25	0.69	0.38	4.13	1/2
PSS250-3-AA	PSS250-3-CH-AA	2 1/2	1	3.13	3.25	3.00	4.25	0.56	0.38	4.63	1/2
PSS250-5-AA	PSS250-5-CH-AA	2 1/2	1	3.13	3.25	5.00	6.25	0.69	0.38	4.63	1/2
PSS300-3-AA	PSS300-3-CH-AA	3	1	3.63	3.75	3.00	4.25	0.56	0.44	4.63	5/8
PSS300-5-AA	PSS300-5-CH-AA	3	1	3.63	3.75	5.00	6.25	0.69	0.44	4.63	5/8
PSS350-3-AA	PSS350-3-CH-AA	3 1/2	1	4.00	3.75	3.00	4.25	0.56	0.38	6.38	5/8
PSS350-5-AA	PSS350-5-CH-AA	3 1/2	1	4.13	3.75	5.00	6.25	0.69	0.50	6.38	5/8
PSS350-7-AA	PSS350-7-CH-AA	3 1/2	1	4.13	3.75	7.00	8.25	0.81	0.50	6.38	3/4
PSS400-3-AA	PSS400-3-CH-AA	4	1	4.38	5.25	3.00	4.25	0.56	0.38	7.63	3/4
PSS400-5-AA	PSS400-5-CH-AA	4	1	4.50	3.75	5.00	6.25	0.69	0.50	7.13	5/8
PSS400-7-AA	PSS400-7-CH-AA	4	1	4.50	3.75	7.00	8.25	0.81	0.50	6.63	3/4
PSS400-5-4.75H-AA	PSS400-5-4.75H-CH-AA	4	1	4.75	3.75	5.00	6.25	0.69	0.44	6.63	5/8
PSS400-5-5.0H-AA	PSS400-5-5.0H-CH-AA	4	1	5.00	3.75	5.00	6.25	0.69	0.44	6.63	5/8
PSS450-3-AA	PSS450-3-CH-AA	4 1/2	1	4.75	3.75	3.00	4.25	0.56	0.44	7.13	5/8
PSS450-5-AA	PSS450-5-CH-AA	4 1/2	1	4.75	3.75	5.00	6.25	0.69	0.44	7.13	5/8
PSS500-3-AA	PSS500-3-CH-AA	5	1	5.00	3.75	3.00	4.25	0.56	0.38	7.69	5/8
PSS500-5-AA	PSS500-5-CH-AA	5	1	5.00	3.75	5.00	6.25	0.69	0.50	7.69	5/8
PSS500-7-AA	PSS500-7-CH-AA	5	1	5.00	3.75	7.00	8.50	0.81	0.50	7.69	5/8
PSS600-5-AA	PSS600-5-CH-AA	6	1	6.00	4.00	5.00	6.25	0.69	0.50	8.75	5/8

AFL's Dossert® product line offers a wide range of substation accessories in low voltage up to 765 kV applications in bronze or aluminum materials.

© 2011, AFL, all rights reserved. PP-3-00413, Rev 6, 4.20.2026
Specifications are subject to change without notice.

AFL | AFLglobal.com
1 (800) 890-8878

TYPE PSSR-AA, PSSR-CH-AA

Tubular Bus Support

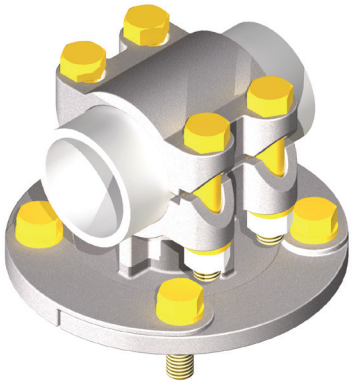

An aluminum support for securing a tubular bus to a post or pedestal type insulator. Fully adjustable to any angle within a complete circle (360°) with the advantage of four bolts maintaining angular setting as well as mounting pressure. Reversible cap permits rigid or slip fit on conductor. Unless otherwise specified cap screws are supplied.

Material

Aluminum Alloy

Hardware

Yellow anodized aluminum bolts, nuts, and lockwashers.
Galvanized steel base mounting hardware is included.

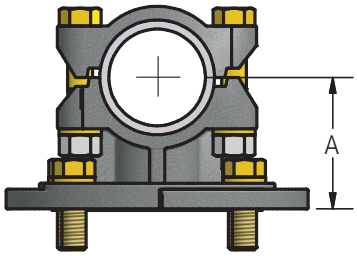

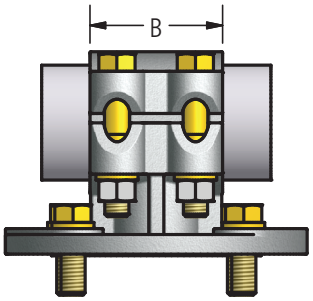

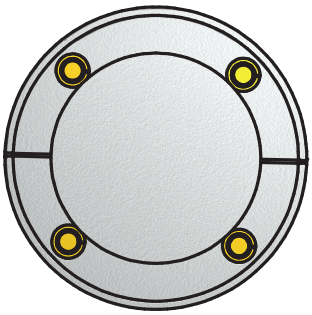

Ordering Information

CATALOG NUMBER		SPS	BOLT CIRCLE	DIMENSIONS IN INCHES			
						BOLT SIZE	
STANDARD	WITH CHATTER SPRING			A	B	CAP	BASE
PSSR50-3-AA	PSSR50-3-CH-AA	1/2	3	1-3/4	2-1/8	3/8	1/2
PSSR50-5-AA	PSSR50-5-CH-AA	1/2	5	2-1/8	2-1/8	3/8	5/8
PSSR75-3-AA	PSSR75-3-CH-AA	3/4	3	2	2-1/8	3/8	1/2
PSSR75-5-AA	PSSR75-5-CH-AA	3/4	5	2-1/4	2-1/8	3/8	5/8
PSSR100-3-AA	PSSR100-3-CH-AA	1	3	2	2-1/8	3/8	1/2
PSSR100-5-AA	PSSR100-5-CH-AA	1	5	2-1/4	2-1/8	3/8	5/8
PSSR125-3-AA	PSSR125-3-CH-AA	1-1/4	3	2-1/4	2-1/4	1/2	1/2
PSSR125-5-AA	PSSR125-5-CH-AA	1-1/4	5	2-3/8	2-1/4	1/2	5/8
PSSR150-3-AA	PSSR150-3-CH-AA	1-1/2	3	2-1/2	2-1/2	1/2	1/2
PSSR150-5-AA	PSSR150-5-CH-AA	1-1/2	5	2-1/2	2-1/2	1/2	5/8
PSSR200-3-AA	PSSR200-3-CH-AA	2	3	2-3/4	2-3/4	1/2	1/2
PSSR200-5-AA	PSSR200-5-CH-AA	2	5	2-3/4	2-3/4	1/2	5/8
PSSR250-3-AA	PSSR250-3-CH-AA	2-1/2	3	3-1/8	3	1/2	1/2
PSSR250-5-AA	PSSR250-5-CH-AA	2-1/2	5	3-1/8	3	1/2	5/8
PSSR300-3-AA	PSSR300-3-CH-AA	3	3	3-5/8	3-1/4	5/8	1/2
PSSR300-5-AA	PSSR300-5-CH-AA	3	5	3-5/8	3-1/4	5/8	5/8
PSSR350-3-AA	PSSR350-3-CH-AA	3-1/2	3	4	3-1/4	5/8	1/2
PSSR350-5-AA	PSSR350-5-CH-AA	3-1/2	5	4	3-1/4	5/8	5/8
PSSR400-3-AA	PSSR400-3-CH-AA	4	3	4-1/2	3-1/4	5/8	1/2
PSSR400-5-AA	PSSR400-5-CH-AA	4	5	4-1/2	3-1/4	5/8	5/8

AFL's Dossert® product line offers a wide range of substation accessories in low voltage up to 765 kV applications in bronze or aluminum materials.

© 2011, AFL, all rights reserved. PP-3-00414, Rev 2, 9.26.2025
Specifications are subject to change without notice.

TYPE PSU-AA
Pipe or Cable Bus Support

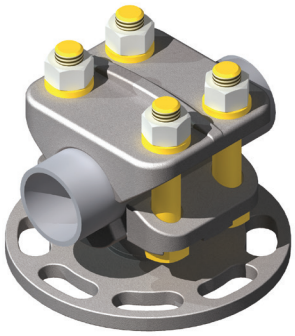

Material

Aluminum Alloy

Hardware

Aluminum nuts, bolts, and lockwashers.
Galvanized steel base mounting hardware is included.

Notes

For base mounting dimensions and hardware see page 3 in the general catalog index.

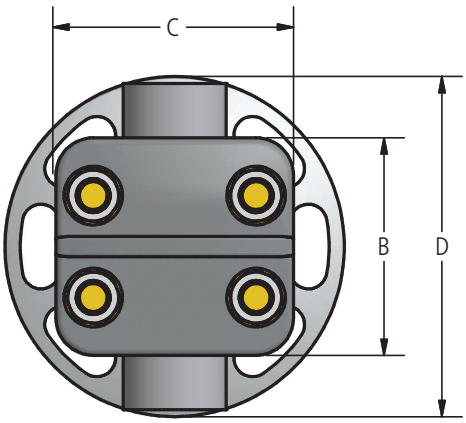

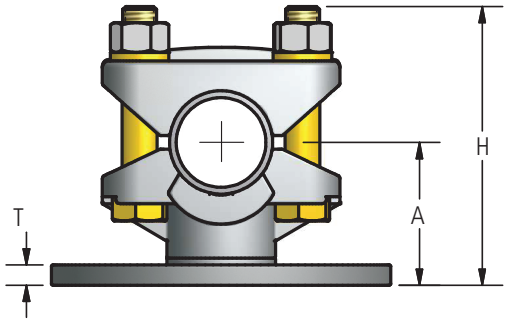

Ordering Information

CATALOG NUMBER	SPS		CABLE RANGE AAC		CABLE RANGE ACSR		BOLT CIRCLE	DIMENSIONS IN INCHES						
	MIN	MAX	MIN	MAX	MIN	MAX		A	B	C	D	H	T	BOLT SIZE
PSU50-3-AA	1/8	1/2	6STR	500MCM	6	336.4	3	2-1/8	3	3-1/8	4-1/4	3-1/2	3/8	1/2
PSU50-5-AA	1/8	1/2	6STR	500MCM	6	336.4	5	2-1/8	3	3-1/8	6-1/4	3-1/2	3/8	1/2
PSU100-3-AA	1/4	1	4/0	1250MCM	4/0	1033.5	3	2-1/4	3-1/2	3-1/2	4-1/4	4-1/4	3/8	1/2
PSU100-5-AA	1/4	1	4/0	1250MCM	4/0	1033.5	5	2-1/4	3-1/2	3-1/2	6-1/4	4-1/4	3/8	1/2
PSU150-3-AA	3/4	1-1/2	850MCM	2500MCM	715.5	2515	3	2-5/8	4	4-3/8	4-1/4	4-3/4	3/8	5/8
PSU150-5-AA	3/4	1-1/2	850MCM	2500MCM	715.5	2515	5	2-5/8	4	4-3/8	6-1/4	4-3/4	3/8	5/8
PSU150-7-AA	3/4	1-1/2	850MCM	2500MCM	715.5	2515	7	2-5/8	4	4-3/8	8-1/2	4-7/8	1/2	5/8
PSU200-3-AA	1-1/4	2	2500MCM	3500MCM	2034	2870	3	2-3/4	3	4-3/8	4-1/4	4-7/8	3/8	5/8
PSU200-5-AA	1-1/4	2	2500MCM	3500MCM	2034	2870	5	2-3/4	3	4-3/8	6-1/4	4-7/8	3/8	5/8

AFL's Dossert® product line offers a wide range of substation accessories in low voltage up to 765 kV applications in bronze or aluminum materials.

© 2011, AFL, all rights reserved. PP-3-00417, Revision 4, 9.26.2025
Specifications are subject to change without notice.

TYPE PSV-AA

Vertical Pipe Bus Supportt

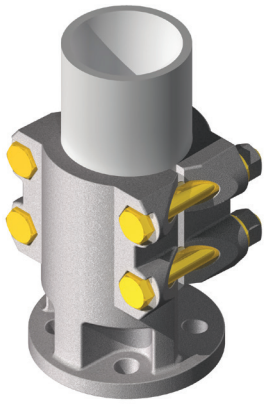

Material

Aluminum Alloy

Hardware

Yellow anodized aluminum nuts, bolts and lockwashers.
Galvanized steel base mounting hardware is included

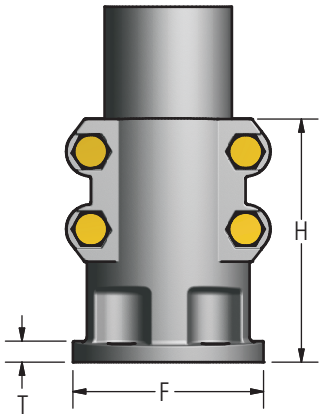

Ordering Information

CATALOG NUMBERS	SPS	BOLT CIRCLE	DIMENSIONS IN INCHES			CANTILEVER FORCE*	
			F	H	T	ALLOWABLE	ULTIMATE
PSV100-3-AA	1	3	4 1/4	4 3/8	3/8	1920	2750
PSV150-3-AA	1 1/2	3	4 1/4	4 3/4	3/8	2000	2880
PSV150-5-AA	1 1/2	5	6 1/4	4 3/4	3/8	4130	5950
PSV200-3-AA	2	3	4 1/4	5 1/2	3/8	2080	2990
PSV200-5-AA	2	5	6 1/4	4 3/4	3/8	4430	6380
PSV250-3-AA	2 1/2	3	4 1/4	5 1/2	13/32	2160	3110
PSV250-5-AA	2 1/2	5	6 1/4	4 3/4	13/32	4590	6610
PSV300-3-AA	3	3	4 1/4	5 5/16	13/32	2240	3230
PSV300-5-AA	3	5	6 1/4	5 5/16	13/32	4870	7010
PSV350-3-AA	3 1/2	3	4 1/4	4 7/8	13/32	2720	3920
PSV350-5-AA	3 1/2	5	6 1/4	5 1/2	13/32	5030	7240
PSV400-3-AA	4	3	4 1/4	4 7/8	13/32	2820	4060
PSV400-5-AA	4	5	6 1/4	5 1/2	13/32	5350	7700

* -Cantilver force is applied at a point on the bus location 2 ft away from the bus support.

AFL's Dossert® product line offers a wide range of substation accessories in low voltage up to 765 kV applications in bronze or aluminum materials.

© 2011, AFL, all rights reserved. PP-3-00419, Revision 1, 9.26.2025
Specifications are subject to change without notice.

AFL
AFLglobal.com
1 (800) 890-8878