TYPE PSV-AA

Vertical Pipe Bus Supportt

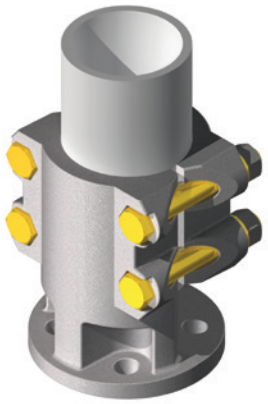

Material

Aluminum Alloy

Hardware

Yellow anodized aluminum nuts, bolts and lockwashers.
Galvanized steel base mounting hardware is included

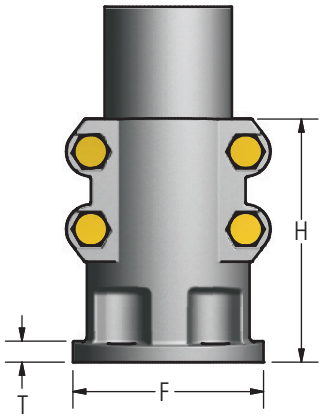

Ordering Information

CATALOG NUMBERS	SPS	BOLT CIRCLE	DIMENSIONS IN INCHES			CANTILEVER FORCE*	
			F	H	T	ALLOWABLE	ULTIMATE
PSV100-3-AA	1	3	4 1/4	4 3/8	3/8	1920	2750
PSV150-3-AA	1 1/2	3	4 1/4	4 3/4	3/8	2000	2880
PSV150-5-AA	1 1/2	5	6 1/4	4 3/4	3/8	4130	5950
PSV200-3-AA	2	3	4 1/4	5 1/2	3/8	2080	2990
PSV200-5-AA	2	5	6 1/4	4 3/4	3/8	4430	6380
PSV250-3-AA	2 1/2	3	4 1/4	5 1/2	13/32	2160	3110
PSV250-5-AA	2 1/2	5	6 1/4	4 3/4	13/32	4590	6610
PSV300-3-AA	3	3	4 1/4	5 5/16	13/32	2240	3230
PSV300-5-AA	3	5	6 1/4	5 5/16	13/32	4870	7010
PSV350-3-AA	3 1/2	3	4 1/4	4 7/8	13/32	2720	3920
PSV350-5-AA	3 1/2	5	6 1/4	5 1/2	13/32	5030	7240
PSV400-3-AA	4	3	4 1/4	4 7/8	13/32	2820	4060
PSV400-5-AA	4	5	6 1/4	5 1/2	13/32	5350	7700

* -Cantilver force is applied at a point on the bus location 2 ft away from the bus support.

AFL's Dossert® product line offers a wide range of substation accessories in low voltage up to 765 kV applications in bronze or aluminum materials.

© 2011, AFL, all rights reserved. PP-3-00419, Revision 1, 9.26.2025
Specifications are subject to change without notice.

AFL
AFLglobal.com
1 (800) 890-8878