TYPE PSD-AA, PSD-CH-AA

Bus Support, Pipe, Slide or Tight Fit

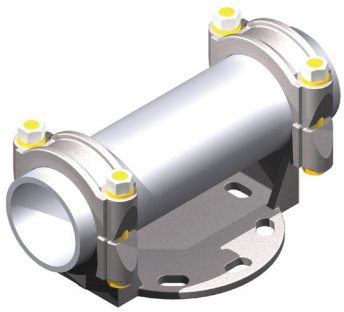

Bolted clamp type support, for pipe-to-pipe connection, with reversible tight or rigid fit.

Material
Aluminum Alloy

Hardware
Yellow anodized aluminum bolts, nuts and lockwashers

Galvanized steel base mounting hardware included

Notes
- For Chatter Spring, add "-CH" to catalog number. EX: PSD400-3-CH-AA
- For Grade Five Galvanized Steel Hardware, add "-GS5" to catalog number. EX: PSD400-5-AA-GS5
- For Stainless Steel bolts, lockwashers and Everdur nuts, add "-SSHBN" to catalog number. EX: PSD400-3-AA-SSBHN
- For base mounting dimensions and hardware, see page 3 in the general catalog index of AFL's Substation Catalog or page 46 of the Swage Accessories Catalog.

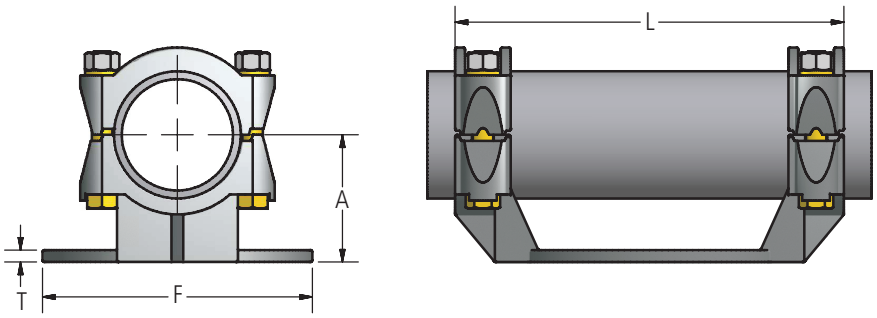

Ordering Information

Catalog Number		SPS	Bolt Circle	Dimensions (Inches)				Bolt Size
Standard	Chatter Spring			A	F	L	T	
PSD75-3-AA	PSD75-3-CH-AA	3/4	3	2	4-1/4	6-3/4	3/8	1/2
PSD75-5-AA	PSD75-5-CH-AA	3/4	5	2-1/4	6-1/4	9	3/8	1/2
PSD100-3-AA	PSD100-3-CH-AA	1	3	2	4-1/4	7	3/8	1/2
PSD100-5-AA	PSD100-5-CH-AA	1	5	2-1/4	6-1/4	9	3/8	1/2
PSD125-3-AA	PSD125-3-CH-AA	1-1/4	3	2-1/4	4-1/4	7-1/4	3/8	1/2
PSD125-5-AA	PSD125-5-CH-AA	1-1/4	5	2-3/8	6-1/4	9-1/2	3/8	1/2
PSD150-3-AA	PSD150-3-CH-AA	1-1/2	3	2-1/2	4-1/4	7-1/4	3/8	1/2
PSD150-5-AA	PSD150-5-CH-AA	1-1/2	5	2-1/2	6-1/4	9-1/2	3/8	1/2
PSD200-3-AA	PSD200-3-CH-AA	2	3	2-3/4	4-1/4	7-1/4	3/8	1/2
PSD200-5-AA	PSD200-5-CH-AA	2	5	2-3/4	6-1/4	9-1/2	3/8	1/2
PSD250-3-AA	PSD250-3-CH-AA	2-1/2	3	3-1/8	4-1/4	7-3/4	3/8	1/2
PSD250-5-AA	PSD250-5-CH-AA	2-1/2	5	3-1/8	6-1/4	10	3/8	1/2
PSD300-3-AA	PSD300-3-CH-AA	3	3	3-5/8	4-1/4	7-3/4	3/8	5/8
PSD300-5-AA	PSD300-5-CH-AA	3	5	3-5/8	6-1/4	10	3/8	5/8
PSD300-7-AA	PSD300-7-CH-AA	3	7	3-5/8	8-1/2	12-1/4	1/2	5/8
PSD350-3-AA	PSD350-3-CH-AA	3-1/2	3	4	4-1/4	7-3/4	3/8	5/8
PSD350-5-AA	PSD350-5-CH-AA	3-1/2	5	4	6-1/4	10	3/8	5/8
PSD350-7-AA	PSD350-7-CH-AA	3-1/2	7	4	8-1/2	12	1/2	5/8

AFL's Dossert® product line offers a wide range of substation accessories in low voltage up to 765 kV applications in bronze or aluminum materials.

continued

© 2011, AFL, all rights reserved. PP-3-00405 , Revision 5, 7.01.2026
Specifications are subject to change without notice.

TYPE PSD-AA, PSD-CH-AA

Bus Support, Pipe, Slide or Tight Fit

Ordering Information

Catalog Number		SPS	Bolt Circle	Dimensions (Inches)				Bolt Size
Standard	Chatter Spring			A	F	L	T	
PSD400-3-AA	PSD400-3-CH-AA	4	3	4-1/2	4-1/4	7-3/4	1/2	5/8
PSD400-5-AA	PSD400-5-CH-AA	4	5	4-1/2	6-1/4	10	3/8	5/8
PSD400-7-AA	PSD400-7-CH-AA	4	7	4-1/2	8-1/2	12-1/4	5/8	5/8
PSD450-3-AA	PSD450-3-CH-AA	4-1/2	3	4-3/4	4-1/4	8	1/2	5/8
PSD450-5-AA	PSD450-5-CH-AA	4-1/2	5	4-3/4	6-1/4	10	1/2	5/8
PSD450-7-AA	PSD450-7-CH-AA	4-1/2	7	4-3/4	8-1/2	12-3/4	1/2	5/8
PSD500-3-AA	PSD500-3-CH-AA	5	3	5	4-1/4	8	7/16	5/8
PSD500-5-AA	PSD500-5-CH-AA	5	5	5	6-1/4	10	1/2	5/8
PSD500-7-AA	PSD500-7-CH-AA	5	7	5	8-1/2	12-3/4	5/8	5/8
PSD600-3-AA	PSD600-3-CH-AA	6	3	5-1/2	4-1/4	8-1/4	1/2	5/8
PSD600-5-AA	PSD600-5-CH-AA	6	5	5-1/2	6-1/4	10-1/2	1/2	5/8
PSD600-7-AA	PSD600-7-CH-AA	6	7	5-1/2	8-1/2	12-3/4	5/8	5/8
PSD800-5-AA	PSD800-5-CH-AA	8	5	6-7/8	6-1/4	10-1/2	1/2	5/8
PSD800-7-AA	PSD800-7-CH-AA	8	7	6-7/8	8-1/2	12-3/4	1/2	5/8

© 2011, AFL, all rights reserved. PP-3-00405 , Revision 5, 7.01.2026
Specifications are subject to change without notice.

AFLglobal.com
1 (800) 890-8878