

NETWORK UNDERGROUND

MICON Accessories, Connectors, Limiter Assemblies

Product Catalog

Founded in 1984, AFL is an international manufacturer providing end-to-end solutions to the energy, service provider, enterprise, hyperscale and industrial markets.

AFL's products are in use in over 130 countries and include fiber optic cable and hardware, transmission and substation accessories, outside plant equipment, connectivity, test and inspection equipment, fusion splicers and training.

AFL also offers a wide variety of services supporting data center, enterprise, wireless and outside plant applications.

AFL is dedicated to bringing our customers a quality product as well as delivering superior value.

AFL

COMPANY WITH
QUALITY SYSTEM
CERTIFIED BY DNV GL
= ISO 9001 =

Table of Contents

Alphanumeric Connector Type Index 2
Pictorial Index 3
Introduction 5
TECH: MICON 6
TECH: MICON Insulation 7
TECH: MICON Ordering Data 9
Limiter Fusing Characteristics 10
MICON Coupling Type MIC 11
Type MA Cable Receptacle 12
MICON Outlet Plugs Type P 13
Type C Tapered Compression Sleeve 14
Type CKS Compression Receptacle 15
Type MIS Insulating Sleeve 16
Type STC Cable Coupler 17

Types NRLA-R123, NRLA-P123

Limiter Link Assembly 18
Type NRLA-PL123 Long Limiter Link Assembly 19
Types NRLA-R3, NLRA-P3 Limiter Link 20
Type NRLA-PL3 Long Limiter Link 21
Types NRLA-R2, NRLA-P2 Limiter Shell for NRLA-R3, NRLA-P3, NRLA-PL3 22
Type NRLA-1 Insulating Sleeve for NRLA-P, NRLA-R, NRLA-PL 23
Types LLA-2R123, LLA-2P123 Limiter Terminal Assembly 24
Type LLA-2PL123 Long Limiter Terminal Assembly 25
Types LLA-2R3, LLA-2P3 Limiter Terminal 26
Type LLA-2PL3 Long Limiter Terminal 27
Type LLA-2P2 Limiter Terminal Shell 28
Type LLA-2P1 Limiter Terminal Insulating Sleeve 29
Types ML-R123, ML-P123 MICON Limiter Assembly 30
Type ML-PL123 MICON Long Limiter Assembly 31
Types ML-R3, ML-P3 MICON Limiter 32
Type ML-PL3 MICON Long Limiter for Paper Insulated Cable 33
Types ML-R2, ML-P2 Limiter Shell 34
Type ML-1 MICON Limiter Insulating Sleeve 35
Types BCLA-R123, BCLA-P123, BCLA-PL123 Limiter Tap Assembly 36
Type RLB-E Renewable MICON Limiter Link Assembly 37
Type RLM-B Limiter Mounting Block 38
Type RL-2 Compression Terminal 39
Type RLM-E Renewable Limiter Link Assembly 40
Type RLL-E Renewable Limiter Link Coupler 41
Type RLBC-E Renewable Limiter Link Connector 42
Type RLLA-E Special Renewable Link Connector 43
Type NCLA-E Straight Tap Connector 44
Types CRC and CRC-C Insulating Caps 45

Type CRW

Thermal Insulating Wedge 46
Type DPC Compression Coupler 47

Type DPR

Compression Reducing Coupler 48
Type CRT Compression Tee Coupler 49
Type DPL Compression Terminal Lug 51
Type BCKT Tee Connector 53
Type HNT Hood Nut Tee Connector 55
Type STLH Hood Nut Terminal Connector 56
Alnox® UG Electrical Joint Compound 58

Alphanumeric Connector Type Index

BCKT . . . 53
BCLA-R123, BCLA-P123, BCLA-PL123 . . . 36
C . . . 14
CKS . . . 15
CRC, CRC-C . . . 45
CRT . . . 49
CRW . . . 46
DPC . . . 47
DPL . . . 51
DPR . . . 48
HNT . . . 55
LLA-2P1 . . . 29
LLA-2P2 . . . 28
LLA-2PL123 . . . 25
LLA-2PL3 . . . 27
LLA-2R123, LLA-2P123 . . . 24
LLA-2R3, LLA-2P3 . . . 26
MA . . . 12
MIC . . . 11
MIS . . . 16
ML-1 . . . 35
ML-PL123 . . . 31
ML-PL3 . . . 33
ML-R123, ML-P123 . . . 30
ML-R2, ML-P2 . . . 34
ML-R3, ML-P3 . . . 32
NCLA-E . . . 44
NRLA-1 . . . 23
NRLA-PL123 . . . 20
NRLA-PL3 . . . 21
NRLA-R123, NRLA-P123 . . . 18
NRLA-R2, NRLA-P2 . . . 22
NRLA-R3, NLRA-P3 . . . 20
P . . . 13
RL-2 . . . 39
RLBC-E . . . 42
RLB-E . . . 37
RLLA-E . . . 43
RLL-E . . . 41
RLM-B . . . 38
RLM-E . . . 40
STC . . . 17
STLH . . . 56

MICON Accessories

	Type MIC PG. 11
	Type MA PG. 12
	Type P PG. 13
	Type C PG. 14
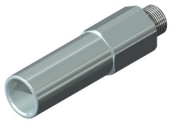	Type CKS PG. 15
	Type MIS PG. 16
	Type STC PG. 17
	Types NRLA-R123, NRLA-P123 PG. 18
	Type NRLA-PL123 PG. 19
	Types NRLA-R3, NRLA-P3 PG. 20
	Type NRLA-PL3 PG. 21
	Types NRLA-R2, NRLA-P2 PG. 22
	Type NRLA-1 PG. 23
	Types LLA- 2R123, LLA-2P123 PG. 24
	Type LLA-2PL123 PG. 25
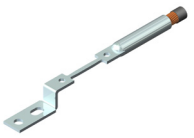	Types LLA-2R3, LLA-2P3 PG. 26
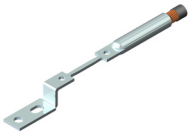	Type LLA-2PL3 PG. 27
	Type LLA-2P2 PG. 28
	Type LLA-2P1 PG. 29

MICON Limiter Assemblies

	Types ML-R123, ML-P123 PG. 30
	Type ML-PL123 PG. 31
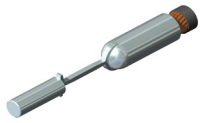	Types ML-R3, ML-P3 PG. 32
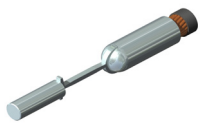	Type ML-PL3 PG. 33

MICON Limiter Assemblies

	Types ML-R2, ML-P2 PG. 34
	Type ML-1 PG. 35
	Types BCLA-R123, BCLA-P123, BCLA-PL123 PG. 36
	Type RLB-E PG. 37
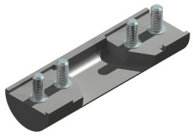	Type RLM-B PG. 38
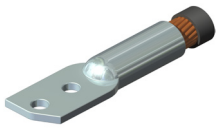	Type RL-2 PG. 39
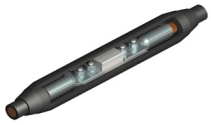	Type RLM-E PG. 40

	Type RLL-E PG. 41
	Type RLBC-E PG. 42
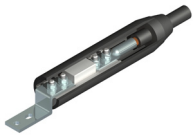	Type RLLA-E PG. 43
	Type NCLA-E PG. 44
	Types CRC, CRC-C PG. 45
	Type CRW PG. 46
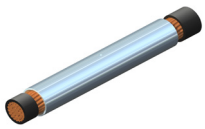	Type DPC PG. 47
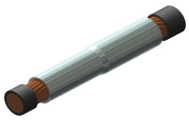	Type DPR PG. 48
	Type CRT PG. 49

	Type DPL PG. 51
	Type BCKT PG. 53
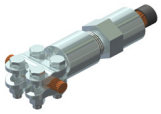	Type HNT PG. 55
	Type STLH PG. 56

Compounds

	Alnox® UG Electrical Joint Compound PG. 60

Introduction

The Dossert line of connectors from AFL have been used underground almost since the first underground electrical distribution systems were installed. Early records show that Dossert connectors were used in underground installations dating from 1910.

Changes in the industry led to the development and manufacture of a complete line of connectors and fittings for underground use. Research in materials and manufacturing techniques enabled improvements to the Dossert line without affecting standardization and interchangeability.

The main emphasis in the development program has been on interchangeability of the connectors and fittings and of their various components. Fortunately, most underground connectors are manufactured to standards established by several public utilities and these standards have gained wide acceptance throughout the country. The advantages of this standardization are great as not only may various components in a system be replaced without concern over the name of the manufacturer, date of manufacture and catalog numbers, but training of personnel and stocking of components are simplified. Compression tools which very often represent a sizeable investment will not be made obsolete.

It did not seem wise to introduce radically different connector designs even though present experience would point to some advantage of newer designs. This is an area where maximum reliability is an essential requirement, and where because of standardization and training of installation crews any changes would be disadvantageous. Improvements in underground connectors were, therefore, limited to those changes which would not affect interchangeability.

Of great prominence in the improvements of the Dossert line is the almost complete elimination of the "factory taped joint." The use of factory taped joints in place of the fully vulcanized and seamless insulation has been at best a poor compromise between economy of manufacture and reliability. Too often have these joints proven defective because of improper fabrication or rough handling before installation. AFL does not make this compromise, and wherever possible fully molds the insulation around the connector without seams of any kind. This feature has been incorporated in all of the MICON and Crab Connectors.

Improvements in the insulating materials by the development of MYPAR and MYPRENE natural and synthetic insulations is perhaps of superior insulating and aging qualities greatly extend the useful life, and reliabilities of underground installations. The specifications and physical properties of these insulations are presented herein.

In addition to the introduction of a complete line of underground connectors and accessories, AFL offers engineering and manufacturing service for any special requirements in this field. A portion of our engineering department has been organized to respond promptly to inquiries on special fittings and unusual problems which AFL has always considered as important as the regular manufacturing production. Frequently "specials" may not be specials at all, even though they are not catalogued, and may be readily and quickly supplied at nominal cost.

AFL's Dossert® product line offers a wide range of substation accessories in low voltage up to 765 kV applications in bronze or aluminum materials.

© 2011, AFL, all rights reserved. PP-3-00135, Revision 2, 12.5.2025
Specifications are subject to change without notice.

TECH: MICON

The Dossert MICON from AFL is the basic element of a connector assembly for joining 2 to 18 or more electrical cables where a fully insulated, watertight electrical connection is required. It is essentially a pre-insulated bus bar to which cables are connected by means of mechanical cable receptacles in such a manner as to facilitate insulating the joints and making future changes. Its use lies mainly with secondary distribution networks but is not limited to this application. Use of the MICON eliminates considerable field labor. More reliable connections are obtained as cable crotches are eliminated.

The body of the MICON is a copper bus bar of hard drawn high strength copper having an electrical conductivity of not less than 98% I.A.C.S. The bar is of hexagon shape having drilled and tapped holes with contact faces at each outlet position. The bus or core of the connector is covered with high quality molded rubber insulation without seams and with a minimum insulation thickness of 0.220 inches. Holes in the insulation with molded tubular projections are provided at each outlet position. The cable receptacle, either type MA or CKS is inserted through the tubular projection and screwed into the bus core making contact on the threads and on the contact face. The tubular projections permit easy taping with a simple winding motion and this can be done directly over the cable receptacle over a telescoping sleeve.

The component which attaches the cable to the MICON is called the cable receptacle. The most popular type, is type MA which is a mechanical connector that is screwed into the body of the MICON and which receives and connects the cable. The cable clamping element is a tapered sleeve which compresses on the conductor as it is driven into the matching tapered hole in the body of the connector as the gland nut is tightened. There is a tremendous overall mechanical advantage in this connector because of the compounding of the mechanical advantage in the screw of the gland nut with the low angle taper of the sleeve. The result is an extremely secure and reliable joint.

The tapered sleeve is slotted in such a way to provide minimum resistance to compression and to assure even radial contact pressure on the conductor. The slots are numerous and of narrow width so that a single strand cannot be caught in a slot and prevent proper compression. The inside of the tapered sleeve has carefully designed serrations for maximum efficiency electrically and mechanically. Each sleeve is used for one conductor size only. A broad range of conductor sizes are available and only the tapered sleeve need be changed to accommodate a cable within the range of conductor sizes for a given MA unit.

To install the type MA cable receptacle it is necessary to connect the MA body to the MICON. This is accomplished by inserting the threaded stud of the MA body into the tapped hole in the MICON to the cable receptacle. This is usually done by placing the gland nut and the tapered sleeve on the conductor after the insulation has been stripped. The end of the conductor is then placed in the socket and the gland nut is tightened. It is very important that the tapered sleeve be positioned flush with the end of the conductor.

If space does not permit this method of assembly the tapered sleeve and gland nut can be assembled in the connector and the gland nut screwed in until it is just finger tight. Then the end of the conductor is placed in the socket and the tapered sleeve. The cable is measured so that the end will come flush with the end of the tapered sleeve. The gland nut is the tightened with a wrench.

An alternate method of connecting the cable to the MICON is by use of the type CKS compression cable receptacle. Similar to the type MA receptacle, the type CKS has a threaded stud which screws into the MICON body. The other end, however, is a compression sleeve in which the cable is inserted and indents made with a standard compression tool. As with all other compression connectors the type CKS cable receptacle cannot be reused or re-adjusted after the indents have been made.

The MICON is furnished in six basic styles – MC, MCA, MCB, MCC, MCD, and MCE each with current ratings of 1500, 2000, 2500, and 3000 amperes. The ampere ratings are based upon the maximum current permitted to pass through the minimum cross section of the MICON conducting body. The minimum cross section of the MICON would constitute that section which would be formed if one were to take a saw cut directly across the MICON at the center of one of the outlet positions. By proper orientation of the line and load cables, current carrying capacities considerably greater than the ampere ratings of the MICON can be obtained. The ideal arrangement of cables would be to have a line cable feed an outlet and have a load cable, on the same center line but in the directly opposite, adjacent outlet, conducting current away from the MICON connector. Any arrangement would be to have the feeder and load cables oriented in such a manner so as to cause total current to pass through the minimum cross section of the MICON. Under such an arrangement the total current must not exceed the MICON rating.

© 2011, AFL, all rights reserved. PP-3-00135, Revision 2, 12.5.2025
Specifications are subject to change without notice.

TECH: MICON Insulation

All of the MICON types of multi-outlet insulated connectors are manufactured with a fully molded insulation. The standard insulating material is Mypar, or compound type GA-20. Mypar is a specially compounded rubber base insulation designed to resist the deteriorating effects of oils, sulphurous and organic gases as well as seepage water containing the types of contaminates found in sewer systems. Mypar has been chosen as the general insulation for the MICON connectors because of the following beneficial qualities:

1. High dielectric strength
2. High mechanical strength
3. High resistance to abrasion
4. Good resistance to action of alkalis
5. Good resistance to moderately concentrated solutions of common acids.
6. Relatively high resistance to deteriorating effects of oil. Will withstand occasional immersion in oil without any deleterious effects.
7. Long age of life under normal operating temperatures found in the underground systems. Like any rubber bearing compound the life expectancy of Mypar is reduced at elevated temperatures. Mypar can be raised to approximately 95 degrees Celsius before deterioration will occur at an accelerated rate. Mypar maintains a relatively stable Durometer hardness throughout its normal temperature operating range. At extremely low temperatures (approximately 0 degrees Celsius) Mypar will become more rigid but will maintain an adequate degree of flexibility.

There are applications where MICON connectors are subject to frequent immersion in waters containing relatively large amounts of oil or higher concentration of acids, alkalis, and hydro-carbons. For these applications Myprene, or compound GA-62 is recommended as the insulating material. Myprene is a neoprene base compound with extremely high resistance to oil or acid container water. In addition, can be used at temperatures up to 145 degrees Celsius for periods of short duration without any measurable deterioration.

The specifications and minimum physical properties of both compounds are presented in tables A and B.

Table A — Specification for Mypar Insulation

Mypar (Compound GA-20) is the standard rubber insulating compound used on all of the MICON components.

Parameter	Value	
Rubber Content	60% by weight	
Specific Gravity	1.16	
Durometer Hardness	55	
Water absorption after immersion in water at 70°F for 24 hours	0.23%	
Tensile Strength	3000 lbs per sq. in.	
Elongation at Rupture	550%	
Modification of Properties after immersion in ASTM oil #1 for 48 hour period at 70°F	Tensile Strength	1.3% Loss
	Elongation at Rupture	Zero
	Volume Swelling	5% Gain
	Durometer Hardness	Minus 1
Modification of Properties after 96 hour oxygen bomb test at 158°F	Tensile Strength	14.4% Loss
	Elongation at Rupture	17.9% Loss
	Durometer	Plus 3
Electrical Characteristics of Insulation as molded on connector	Effect of rising voltage breakdown test showed 2000 ampere capacity type MC MICON to run between 35 and 40 kV. Test run dry with MICON covered with powdered zinc.	
	Effect of rising voltage breakdown test with same size connector immersed in a 3% Saline solution at 70°F average temperature showed MICON breakdown voltages to run 15-18 kV after 30 weeks.	

© 2011, AFL, all rights reserved. PP-3-00135, Revision 2, 12.5.2025
Specifications are subject to change without notice.

TECH: MICON Insulation (continued)

Table B—Specification for MYPRENE Insulation

MYPRENE (Compound GA-62) is the neoprene insulating compound used when specified in place of MYPAR for more severe applications on MICON components.

Parameter	Value	
Rubber Content	None	
Neoprene Content	52% Neoprene by weight	
Specific Gravity	1.35	
Durometer Hardness	60	
Water absorption after immersion in water at 70°F for 24 hours	1.12%	
Tensile Strength	2500 lbs per sq. in.	
Elongation at Rupture	400%	
Modification of Properties after immersion in ASTM oil #1 for 48 hour period at 70°F	Tensile Strength	19% Gain
	Elongation at Rupture	7% Gain
	Volume Swelling	1.8% Gain
	Durometer Hardness	Minus 1
Modification of Properties after 96 hour oxygen bomb test at 158°F	Tensile Strength	11.9% Loss
	Elongation at Rupture	14% Loss
	Durometer Hardness	Plus 8
Electrical Characteristics of Insulation as molded on connector	Effect of rising voltage breakdown test showed 2000 ampere capacity type MC MICON to run between 20 and 25 kV. Test run dry with MICON covered with powdered zinc.	
	Effect of rising voltage breakdown test with same size connector immersed in a 3% Saline solution at 70°F average temperature showed MICON breakdown voltages to run 12-17 kV.	

© 2011, AFL, all rights reserved. PP-3-00135, Revision 2, 12.5.2025
Specifications are subject to change without notice.

TECH: MICON Ordering Data

All of the Dossert MICON connectors are furnished, unless otherwise specifies, with #63 size outlets as standard connector units. There are also available outlet sizes #88 and #112 which permit use of larger cable sizes in the outlet positions. Table 1 shows the outlet size number, with the corresponding range of specific cable sizes and the receptacle stud mounting thread size.

Table 1

Outlet Size No.	Range of Specific Cable Sizes Handled by Outlet		Stud Mounting Thread Size
	Min.	Max.	
63	#6 Str.	600 MCM	5/8 - 18 NF2
88	#6 Str.	1000 MCM	7/8 - 14 NF2
112	1250 MCM	2000 MCM	1 1/8 - 12 NF2

Table 2

Micon Current Rating (amperes)	Positions A and/or R	Positions All Remaining
1500	#63 or #88	#63
2000	#63, #88, or #112	#63 or #88
2500	#63, #88, or #112	#63, #88, or #112
3000	#63, #88, or #112	#63, #88, or #112

Outlet sizes larger than #63 may be used to advantage in meeting higher load conditions for present installations or for the planning of higher loads on future installations. Table 2 shows the available outlet sizes and their position for the various ampere capacity MICONS.

Table 3

Outlet Position	Cable Size
A	1500 MCM
B	750 MCM
C	800 MCM
R	750 MCM

Order for Type MCD should be written:

MCD 200-8

Outlet Positions	Outlet Size
A	#112
B, C, R	#88
Remaining Outlets	#63

For making proper selection of a MICON connector requiring a cable outlet connection larger than 600 MCM, take the following steps:

A. Choose the desired catalog number from the MICONS shown on pages 10 to 15.
B. Using Table 1 select the outlet size number required for the size cable employed.
C. Using Table 2 determine the available outlet positions for cables larger than 600 MCM.
D. Specify your MICON connector by the following order example:

Assume that an 8 outlet MICON connector in type MCD for 2000 ampere current rating is required. This would call for catalog number MCD 200-8. Let it further be assumed that cable sizes will be required for outlets in accordance with the following schedule:

The wide overlapping of conductor sizes for outlet sizes #63 and #88 permits one to use a #88 outlet with any cable size within the range of the #63 outlet. As future load requirements necessitate larger cables one can connect to the outlet the #88 outlet cable sizes from our 600 MCM to 1000 MCM inclusive. Where no future expansion of load requirements is anticipated it is most economical to select the #63 outlet.

For all MICONS and insulating accessories MYPAR insulation is used as standard procedure. To specify MYPRENE insulation add the suffix "-N" to the catalog number of any part for which MYPRENE insulation is desired.

© 2011, AFL, all rights reserved. PP-3-00135, Revision 2, 12.5.2025
Specifications are subject to change without notice.

Limiter Fusing Characteristics

The Dossert Limiter from AFL is designed with a fusible element which is held to close tolerances to insure a close consistency of operation on all production made elements of any given size. The fusible section provides a time lag on intermittent overloads and does not open the circuit as does a common fuse. The fusible section is designed to sustain moderate overloads but to burn clear and open the circuit under such heavy overloads or faults which would be of a magnitude sufficient to cause damage to the cable insulation.

The time-current characteristics are in consequences derived from the insulation damage characteristics of the cable. Since the insulation damage characteristics of rubber covered and oil-impregnated, paper cable are practically identical, the curves on the chart constitute the damage characteristics for both types of cable. The curves resolving the time-current characteristics of Limiters and the insulation damage characteristics of cables found on the chart represent those sizes commonly used in underground network systems.

The limiter fusing characteristics shown on the chart apply to all types of limiter designs whether they be straight Limiters, Limiter lugs or any Limiter modification designed for the particular conductor size shown.

AFL's Dossert® product line offers a wide range of substation accessories in low voltage up to 765 kV applications in bronze or aluminum materials.

© 2011, AFL, all rights reserved. PP-3-00135, Revision 2, 12.5.2025
Specifications are subject to change without notice.

MICON Coupling Type MIC

A coupling for joining Micon connectors on end. The special engaging feature of the coupling permits the outlets of each unit, when joined in series, to assume any position about the center axis. The small exposed area makes possible a neatly taped junction. Coupling may also be used on side outlets for different assembled configurations.

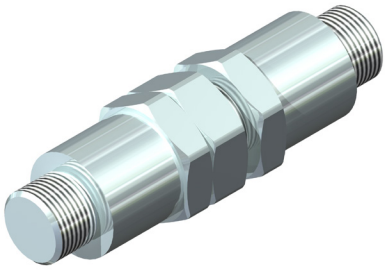

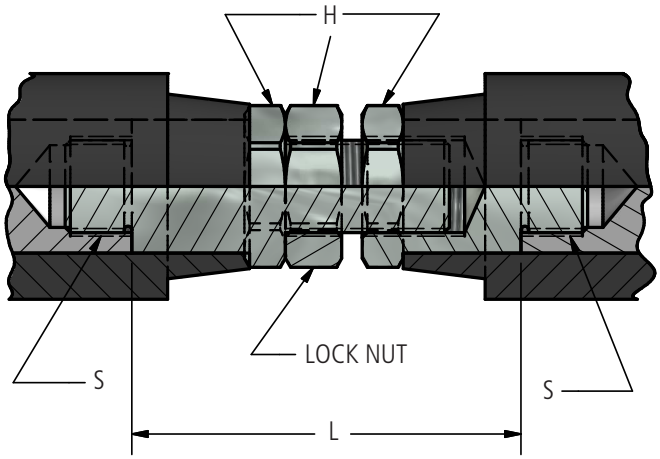

Ordering Information

Catalog Number	Current Rating Amperes	Number of Outlets	Stud Size (S)	Dimensions in Inches	
				L	H*
MIC63	63	1275	5/8 - 18 NF-2	4 3/16	1 5/16
MIC88	88	1700	7/8 - 14 NF-2	4 5/16	1 5/8
MIC112	112	2125	1 1/8 - 12 NF-2	4 11/16	2 1/8

* Across hexagonal flats.

AFL's Dossert® product line offers a wide range of substation accessories in low voltage up to 765 kV applications in bronze or aluminum materials.

© 2011, AFL, all rights reserved. PP-3-00108, Revision 2, 11.5.2025
Specifications are subject to change without notice.

Type MA Cable Receptacle

A high strength, high conductivity cable receptacle for securing cables electrically and mechanically to the MICON outlet positions. Each size accommodates a wide range of cable sizes from maximum to a selected minimum size through use of Type C tapered compression sleeves. The turned edges, compactness, and close fit to the MICON outlets make possible a neat and easy taping.

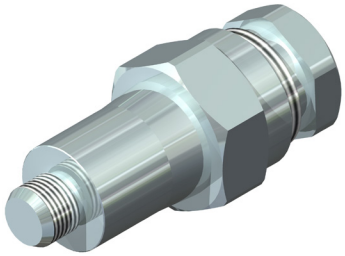

Note

- For Lock Washer, add "-LW" to end of catalog number

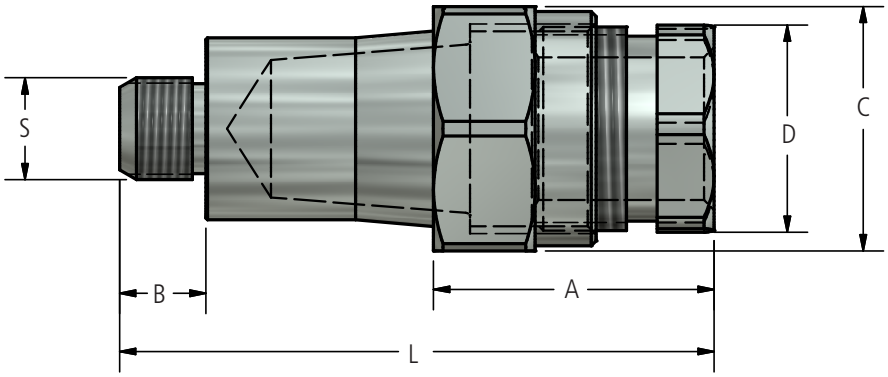

Ordering Information

Catalog Number	Maximum Cable Size	Stud Size (S)	Outlet Size*	Dimensions in Inches				
				A	B	C**	D**	L
MA21	4/0 STR	5/8 - 18 NF-2	63	1 7/16	9/16	1 1/8	7/8	3 13/32
MA25	250 MCM	5/8 - 18 NF-2	63	1 11/16	9/16	1 3/16	15/16	3 21/32
MA30	300 MCM	5/8 - 18 NF-2	63	1 3/4	9/16	1 1/4	1	3 23/32
MA40	400 MCM	5/8 - 18 NF-2	63	1 13/16	9/16	1 3/8	1 1/8	3 25/32
MA50	500 MCM	5/8 - 18 NF-2	63	1 7/8	9/16	1 1/2	1 1/4	3 27/32
MA60	600 MCM	5/8 - 18 NF-2	63	1 15/16	9/16	1 1/2	1 1/4	3 29/32
MA80	800 MCM	7/8 - 14 NF-2	88	2 3/16	3/4	1 13/16	1 1/2	4 11/32
MA100	1000 MCM	7/8 - 14 NF-2	88	2 1/2	3/4	1 15/16	1 5/8	4 21/32
MA125	1250 MCM	1 - 1/8 - 12 NF-2	112	2 9/16	7/8	2 1/4	2	4 27/32
MA150	1500 MCM	1 - 1/8 - 12 NF-2	112	2 3/4	7/8	2 3/8	2 1/8	5 1/32
MA175	1750 MCM	1 - 1/8 - 12 NF-2	112	2 7/8	7/8	2 1/2	2 1/4	5 5/32
MA200	2000 MCM	1 - 1/8 - 12 NF-2	112	3	7/8	2 5/8	2 3/8	5 9/32

* MICON Outlet Size.
** Dimensions across hexagonal flats.

AFL's Dossert® product line offers a wide range of substation accessories in low voltage up to 765 kV applications in bronze or aluminum materials.

© 2011, AFL, all rights reserved. PP-3-00099, Revision 3, 10.27.2025
Specifications are subject to change without notice.

MICON Outlet Plugs Type P

All Micon connectors are furnished with Mypar plugs, accommodating 25% of the outlets. Myprene plugs can also be furnished. To specify, suffix catalog number with -N. Type P plugs make a snug fit on all outlet positions and provide a convenient means for sealing unused outlets.



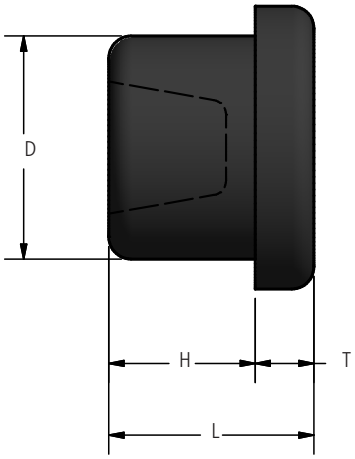

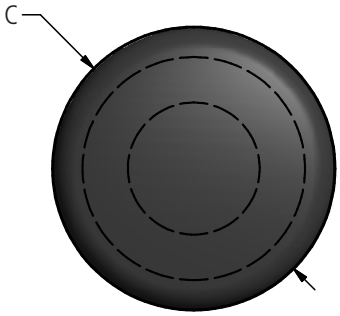

Ordering Information

Catalog Number	Outlet Size	Dimensions in inches				
		C	D	H	L	T
P63	63	1 1/2	1 5/32	1 1/8	1 9/16	7/16
P88	88	1 13/16	1 13/32	1 1/4	1 11/16	7/16
P112	112	2 1/8	1 5/8	1 1/4	1 3/4	1/2

AFL's Dossert® product line offers a wide range of substation accessories in low voltage up to 765 kV applications in bronze or aluminum materials.

© 2011, AFL, all rights reserved. PP-3-00118, Revision 2, 11.10.2025
Specifications are subject to change without notice.

Type C Tapered Compression Sleeve

Designed for use with type MA cable receptacles. Each size is machined with close tolerances for a specific cable size. A low angle of taper provides for greater mechanical advantage effecting a high clamping action. Internal serrations further add to the electrical contact efficiency and secureness of grip.

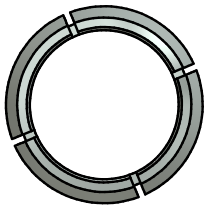





Ordering Information

Cable Size	D in inches	Sleeve Catalog Nos. for Use with Cable Receptacle No.											
		MA-21	MA-25	MA-30	MA-40	MA-50	MA-60	MA-80	MA-100	MA-125	MA-150	MA-175	MA-200
6 STR	0.184	C21-2	C25-2	C30-2									
4 STR	0.232	C21-4	C25-4	C30-4									
2 STR	0.292	C21-6	C25-6	C30-6	C40-6	C50-6							
1 STR	0.332	C21-8	C25-8	C30-8	C40-8	C50-8							
1/0 STR	0.372	C21-10	C25-10	C30-10	C40-10	C50-10							
2/0 STR	0.419	C21-13	C25-13	C30-13	C40-13	C50-13							
3/0 STR	0.47	C21-17	C25-17	C30-17	C40-17	C50-17							
4/0 STR	0.528	C21-21	C25-21	C30-21	C40-21	C50-21							
250 MCM	0.575		C25-25	C30-25	C40-25	C50-25	C60-25						
300 MCM	0.63			C30-30	C40-30	C50-30	C60-30						
350 MCM	0.681				C40-35	C50-35	C60-35	C80-35					
400 MCM	0.728				C40-40	C50-40	C60-40	C80-40					
500 MCM	0.813					C50-50	C60-50	C80-50	C100-50				
550 MCM	0.855						C60-55	C80-55	C100-55				
600 MCM	0.893						C60-60	C80-60	C100-60				
650 MCM	0.929							C80-65	C100-65				
700 MCM	0.964							C80-70	C100-70				
750 MCM	0.998							C80-75	C100-75	C125-75			
800 MCM	1.031							C80-80	C100-80	C125-80			
850 MCM	1.062								C100-85	C125-85			
900 MCM	1.094								C100-90	C125-90			
950 MCM	1.123								C100-95	C125-95			
1000 MCM	1.152								C100-100	C125-100	C150-100		
1250 MCM	1.289									C125-125	C150-125	C175-125	
1500 MCM	1.412										C150-150	C175-150	C200-150
1750 MCM	1.526											C175-175	C200-175
2000 MCM	1.632												C200-200

AFL's Dossert® product line offers a wide range of substation accessories in low voltage up to 765 kV applications in bronze or aluminum materials.

© 2011, AFL, all rights reserved. PP-3-00072, Revision 2, 11.10.2025
Specifications are subject to change without notice.

Type CKS Compression Receptacle

A compression type receptacle for securing cables electrically and mechanically to the MICON outlet positions. For a number of cable sizes, other than listed, type DR corrugated reducing adapters can be used to advantage with catalog numbers CKS21-63 and CKS50-63.

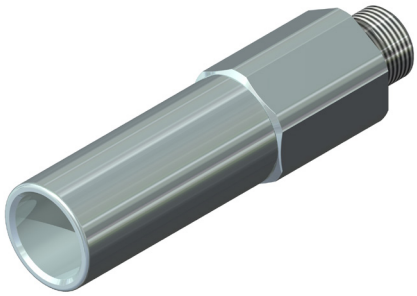

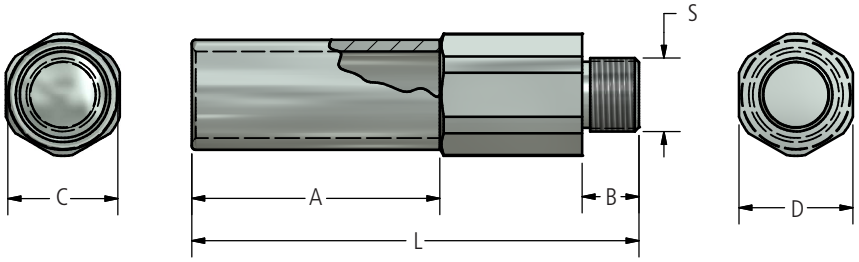

Ordering Information

Catalog Number	Maximum Cable Size	Outlet Size	Stud Size (S)	No. of Indents	Dimensions in inches				
					A	B	C	D	L
CKS21-63	4/0	63	5/8-18	1	1 5/8	9/16	11/16	15/16	4 5/8
CKS25-63	250	63	5/8-18	1	1 5/8	9/16	3/4	15/16	4 5/8
CKS30-63	300	63	5/8-18	2	2	9/16	13/16	15/16	5
CKS35-63	350	63	5/8-18	2	2	9/16	7/8	15/16	5
CKS40-63	400	63	5/8-18	2	2 1/8	9/16	15/16	15/16	5 1/8
CKS50-63	500	63	5/8-18	2	2 1/4	9/16	1 1/16	15/16	5 1/4
CKS60-63	600	63	5/8-18	2	2 11/16	9/16	1 3/16	15/16	5 11/16
CKS70-88	700	88	7/8-14	2	2 13/16	3/4	1 1/4	1 1/4	6 1/4
CKS75-88	750	88	7/8-14	2	2 7/8	3/4	1 5/16	1 1/4	6 5/16
CKS80-88	800	88	7/8-14	2	2 15/16	3/4	1 3/8	1 1/4	6 3/8
CKS90-88	900	88	7/8-14	2	2 15/16	3/4	1 7/16	1 1/4	6 3/8
CKS100-88	1000	88	7/8-14	2	3	3/4	1 1/2	1 1/4	6 7/16
CKS125-112	1250	112	1 1/8-12	2	3 3/16	7/8	1 3/4	1 3/4	6 7/8
CKS150-112	1500	112	1 1/8-12	2	3 13/16	7/8	1 7/8	1 3/4	6 7/8
CKS175-112	1750	112	1 1/8-12	2	3 7/16	7/8	2	1 3/4	7 1/8
CKS200-112	2000	112	1 1/8-12	2	3 7/16	7/8	2 1/8	1 3/4	7 1/8

AFL's Dossert® product line offers a wide range of substation accessories in low voltage up to 765 kV applications in bronze or aluminum materials.

© 2011, AFL, all rights reserved. PP-3-00078, Revision 2, 11.12.2025
Specifications are subject to change without notice.

Type MIS Insulating Sleeve

An insulating sleeve to facilitate the taping of the MICON outlet. The sleeve makes a snug fit over the MICON outlet as well as the cable insulation. A positive seal is established by several turns of tape at each end of the sleeve. When ordering, specify the catalog number or size of MICON, the cable receptacle size type MA, and the diameter of insulation over cable. For largest sleeve grouping, spacings of MICON outlets must be ascertained to establish feasibility of using sleeves in adjacent positions.

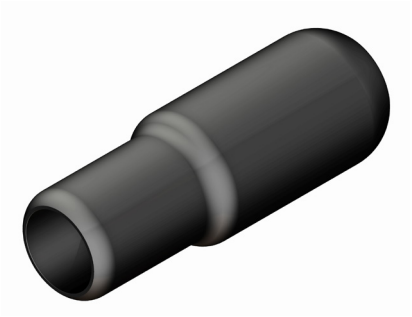

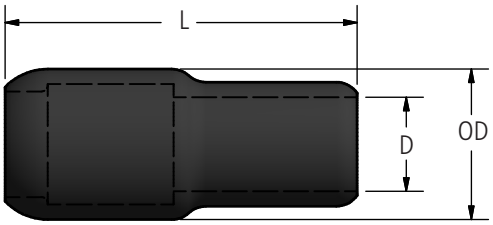

Fig. 1

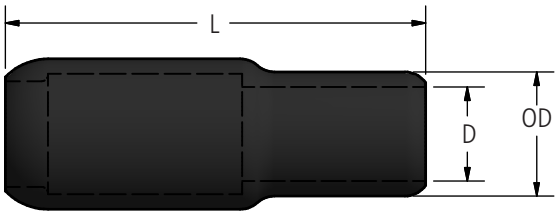

Fig. 2

Ordering Information

Catalog Number	For Use with Receptacles	Fig. No.	Dimensions in inches		
			D	OD	L
MIS25-30-56	MA-21 MA-25 MA-30	1	9/16	1 15/16	4 13/16
MIS25-30-75		1	3/4	1 15/16	4 13/16
MIS25-30-88		1	7/8	1 15/16	4 13/16
MIS25-30-100		1	1	1 15/16	4 13/16
MIS25-30-112		1	1 1/8	1 15/16	4 13/16
MIS25-60-100	MA-40 MA-50 MA-60	1	1	2 3/16	5 1/4
MIS25-60-112		1	1 1/8	2 3/16	5 1/4
MIS25-60-125		1	1 1/4	2 3/16	5 1/4
MIS25-60-138		1	1 3/8	2 3/16	5 1/4
MIS50-80-125	MA-80	1	1 1/4	2 23/32	5 3/4
MIS50-80-138		1	1 3/8	2 23/32	5 3/4
MIS50-80-150		1	1 1/2	2 23/32	5 3/4
MIS50-80-163		1	1 5/8	2 23/32	5 3/4
MIS50-80-175		1	1 3/4	2 23/32	5 3/4
MIS50-100-125	MA-100	2	1 1/4	2 23/32	7 1/4
MIS50-100-138		2	1 3/8	2 23/32	7 1/4
MIS50-100-150		2	1 1/2	2 23/32	7 1/4
MIS50-100-163		2	1 5/8	2 23/32	7 1/4
MIS50-100-175		2	1 3/4	2 23/32	7 1/4
MIS80-200-175	MA-125 MA-150 MA-175 MA-200	2	1 3/4	3 7/16	9 3/8
MIS80-200-188		2	1 7/8	3 7/16	9 3/8
MIS80-200-200		2	2	3 7/16	9 3/8
MIS80-200-212		2	2 1/8	3 7/16	9 3/8
MIS80-200-225		2	2 1/4	3 7/16	9 3/8

AFL's Dossert® product line offers a wide range of substation accessories in low voltage up to 765 kV applications in bronze or aluminum materials.

© 2011, AFL, all rights reserved. PP-3-00109, Revision 2, 11.12.2025
Specifications are subject to change without notice.

Type STC Cable Coupler

A straight line coupler for joining two cables on end. The symmetry and compact design render the connector easy to tape. A high mechanical advantage ensures a sound mechanical and electrical connection for trouble free operation.

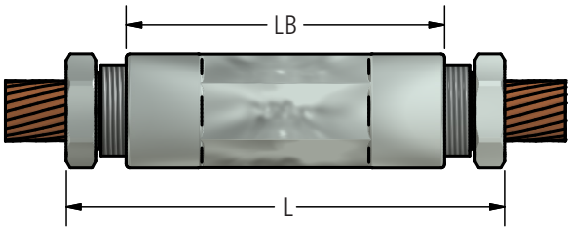

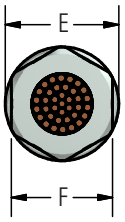

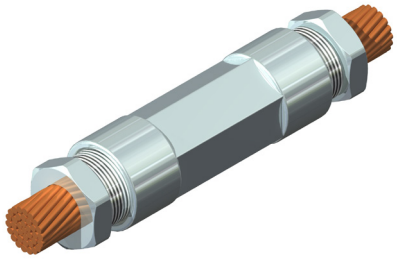

Ordering Information

Catalog Number	Cable Size	Cable Diameter	Dimensions in inches			
			E	F	L	LB
STC2	6 STR	0.184	9/16	7/16	2 5/16	1 1/2
STC4	4 STR	0.232	5/8	1/2	2 5/16	1 1/2
STC6	2 STR	0.292	11/16	9/16	2 3/4	1 7/8
STC8	1 STR	0.332	13/16	5/8	3	2
STC10	1/0 STR	0.372	15/16	3/4	3 3/8	2 1/8
STC13	2/0 STR	0.419	1	13/16	3 1/2	2 1/4
STC17	3/0 STR	0.47	1	13/16	3 3/4	2 1/2
STC21	4/0 STR	0.528	1 1/8	7/8	3 13/16	2 5/8
STC25	250 MCM	0.575	1 3/16	15/16	4	2 3/4
STC30	300 MCM	0.63	1 1/4	1	4 3/8	3
STC35	350 MCM	0.681	1 3/8	1 1/8	5 1/8	3 3/4
STC40	400 MCM	0.728	1 3/8	1 1/8	5 3/16	3 13/16
STC50	500 MCM	0.813	1 1/2	1 1/4	5 1/4	3 7/8
STC60	600 MCM	0.893	1 9/16	1 5/16	5 3/4	4
STC70	700 MCM	0.964	1 3/4	1 7/16	6	4 1/4
STC75	750 MCM	0.998	1 13/16	1 1/2	6 1/2	4 5/8
STC80	800 MCM	1.031	1 13/16	1 1/2	6 5/8	4 3/4
STC90	900 MCM	1.094	1 15/16	1 5/8	6 3/4	4 7/8
STC100	1000 MCM	1.152	1 13/16	1 5/8	7 1/4	5 3/16
STC125	1250 MCM	1.289	2 1/4	2	8	5 5/8
STC150	1500 MCM	1.412	2 3/8	2 1/8	8 3/4	6 1/8
STC175	1750 MCM	1.526	2 1/2	2 1/4	9 1/4	6 1/2
STC200	2000 MCM	1.632	2 5/8	2 3/8	10	7

AFL's Dossert® product line offers a wide range of substation accessories in low voltage up to 765 kV applications in bronze or aluminum materials.

© 2011, AFL, all rights reserved. PP-3-00130, Revision 2, 11.12.2025
Specifications are subject to change without notice.

Types NRLA-R123, NRLA-P123 Limiter Link Assembly

A cable coupler which serves as both a fuse and connector. The fusible element has a time-current characteristic which will enable it to clear faults severe enough to cause cable insulation damage. Unlike a fuse, the limiter will not clear a circuit on system overloads.



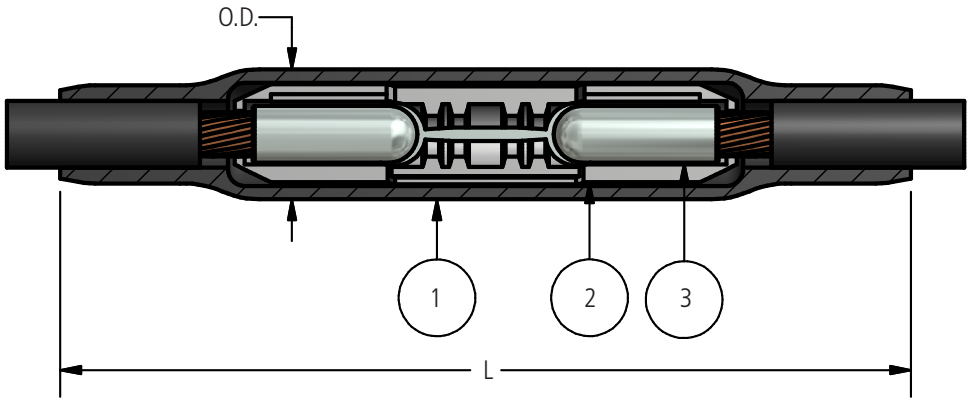

Elements

Type No.	Name
NRLA -1	1 Insulating Sleeve
NRLA-R2 NRLA-P2	2 Shell
NRLA-R3	3 Limiter Link
NRLA-P3	

Ordering Information

Catalog Number		Cable Size	Indents in Cable Socket	Dia. Over Cable Insulation	Dimensions in inches	
For Rubber Insulated Cable	For Paper* Insulated Cable				L	O.D.
NRLA21-R123	NRLA21-P123	4/0	1	Diameter over cable insulation to be specified on order.	12 7/8	2
NRLA25-R123	NRLA25-P123	250 MCM	1		12 7/8	2
NRLA30-R123	NRLA30-P123	300 MCM	2		13 5/8	2 1/4
NRLA35-R123	NRLA35-P123	350 MCM	2		13 5/8	2 1/4
NRLA40-R123	NRLA40-P123	400 MCM	2		13 5/8	2 1/4
NRLA50-R123	NRLA50-P123	500 MCM	2		16	2 7/16
NRLA75-R123	NRLA75-P123	750 MCM	2		16	2 5/8

* Closed end of sockets are sealed to make sockets oil tight.

AFL's Dossert® product line offers a wide range of substation accessories in low voltage up to 765 kV applications in bronze or aluminum materials.

© 2011, AFL, all rights reserved. PP-3-00146, Revision 2, 11.12.2025
Specifications are subject to change without notice.

Type NRLA-PL123 Long Limiter Link Assembly for Paper Insultated Cable

A cable coupler which serves as both a fuse and connector. The fusible element will clear the line on faults or overloads servere enough to cause cable damage. The longer cable sockets offer greater taping area for establishing an oil sealed joint.*

* Closed end of sockets are sealed to make sockets oil tight.



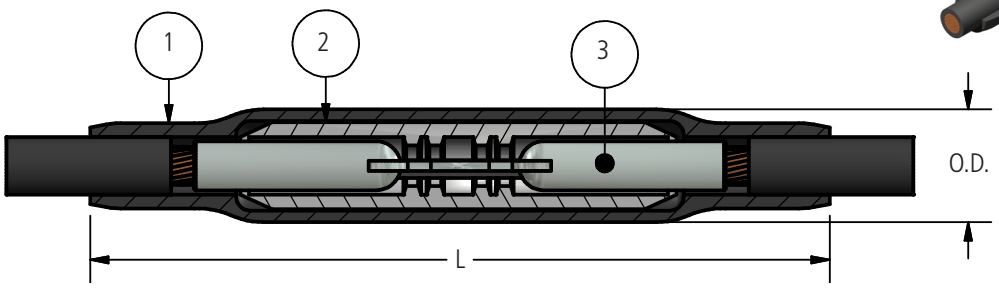

Elements

Type No.	Name
NRLA -1	1 Insulating Sleeve
NRLA-P2	2 Shell
NRLA-PL3	3 Limiter Link

Ordering Information

Catalog Number	Cable Size	iIndents in Cable Socket	Dia. over Cable Insulation	Dimensions in inches	
				L	O.D.
NRLA21-PL123	4/0	1	Diameter over cable insulation to be specified on order.	12 7/8	2
NRLA25-PL123	250 MCM	1		12 7/8	2
NRLA30-PL123	300 MCM	2		13 5/8	2 1/4
NRLA35-PL123	350 MCM	2		13 5/8	2 1/4
NRLA40-PL123	400 MCM	2		13 5/8	2 1/4
NRLA50-PL123	500 MCM	2		16	2 7/16
NRLA75-PL123	750 MCM	2		16	2 5/8

AFL's Dossert® product line offers a wide range of substation accessories in low voltage up to 765 kV applications in bronze or aluminum materials.

© 2011, AFL, all rights reserved. PP-3-00108, Revision 2, 11.5.2025
Specifications are subject to change without notice.

Types NRLA-R3, NLRA-P3 Limiter Link

The limiter link has a dual function of serving as a connecting coupler as well as a fuse. The fusible section determines the time-current characteristics of each size. This is made to close tolerances to insure consistent conformity with the fusing time-current curves.

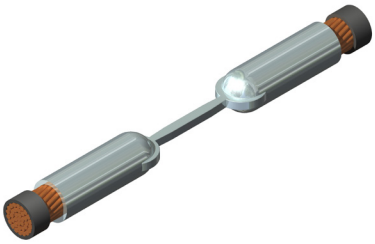

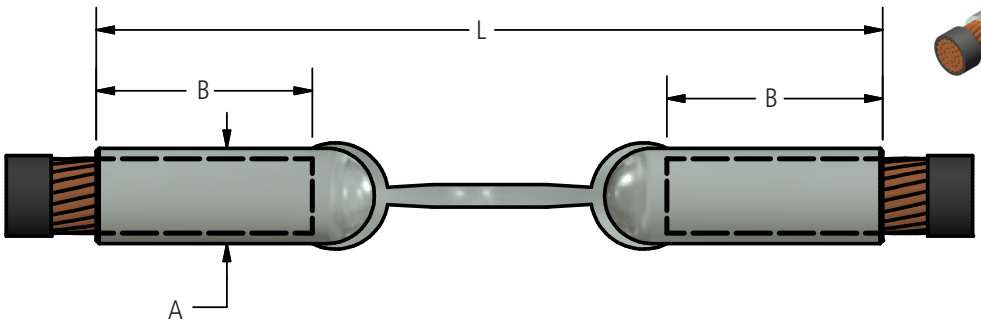

Ordering Information

Catalog Number		Cable Size	Indents in Cable Socket	Dimensions in inches		
For Rubber Insulated Cable	For Paper* Insulated Cable			A**	B	L
NRLA21-R3	NRLA21-P3	4/0 STR	1	11/16	1 3/4	6 3/8
NRLA25-R3	NRLA25-P3	250 MCM	1	3/4	1 7/8	6 3/8
NRLA30-R3	NRLA30-P3	300 MCM	2	13/16	2	6 3/4
NRLA35-R3	NRLA35-P3	350 MCM	2	7/8	2	6 3/4
NRLA40-R3	NRLA40-P3	400 MCM	2	31/32	2 1/8	7
NRLA50-R3	NRLA50-P3	500 MCM	2	1 1/16	2 3/4	8 3/4
NRLA75-R3	NRLA75-P3	750 MCM	2	1 5/16	2 3/4	9

* Closed end of sockets are sealed to make sockets oil tight.
** Diameter.

AFL's Dossert® product line offers a wide range of substation accessories in low voltage up to 765 kV applications in bronze or aluminum materials.

© 2011, AFL, all rights reserved. PP-3-00147, Revision 2, 11.12.2025
Specifications are subject to change without notice.

Type NRLA-PL3 Long Limiter Link for Paper Insulated Cable*

The long limiter link has a dual function of serving as a connecting coupler as well as a fuse. The fusible section determines the time-current characteristics of each size. This is made to close tolerances to insure consistent conformity with the fusing time-current curves. The limiter will not clear the circuit on system overloads but will clear the circuit on faults severe enough to cause cable insulation damage.

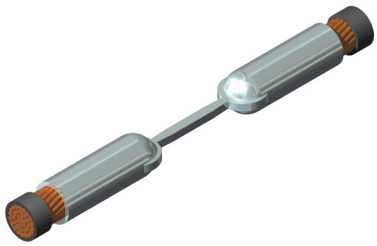

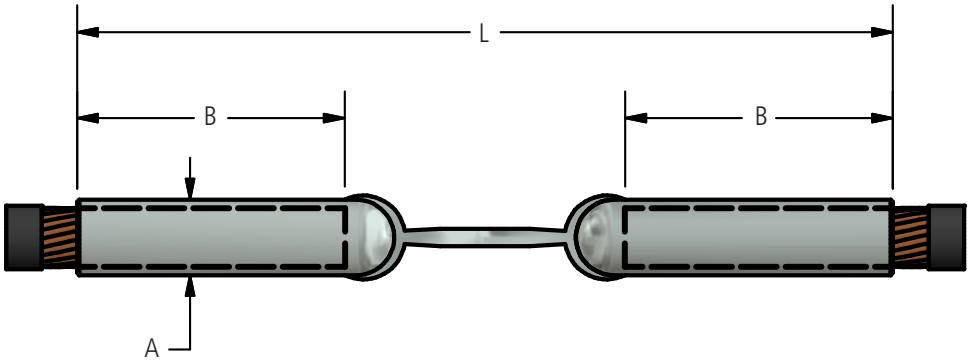

Ordering Information

Catalog Number	Cable Size	Indents in Cable Cocket	Dimensions in inches		
			A**	B	L
NRLA21-PL3	4/0 STR	1	11/16	3	8 7/8
NRLA25-PL3	250 MCM	1	3/4	3 1/8	8 7/8
NRLA30-PL3	300 MCM	2	13/16	3 1/2	9 5/8
NRLA35-PL3	350 MCM	2	7/8	3 1/2	9 5/8
NRLA40-PL3	400 MCM	2	31/32	3 1/2	9 5/8
NRLA50-PL3	500 MCM	2	1 1/16	4 1/4	11 1/2
NRLA75-PL3	750 MCM	2	1 5/16	4 1/4	11 3/4

* Closed end of sockets are sealed to make sockets oil tight.
** Diameter

AFL's Dossert® product line offers a wide range of substation accessories in low voltage up to 765 kV applications in bronze or aluminum materials.

© 2011, AFL, all rights reserved. PP-3-00116, Revision 3, 11.12.2025
Specifications are subject to change without notice.

Types NRLA-R2, NRLA-P2 Limiter Shell for Use with Limiter Link Types NRLA-R3, NRLA-P3, and NRLA-PL3

An arc proof shell of molded composition provided with a system of cavities and heat confining barriers. The shell assembly permits fusible section of limiter to melt and clear line without causing damage to surrounding insulation by restraining and confining the arc and insolating the resulting heat.

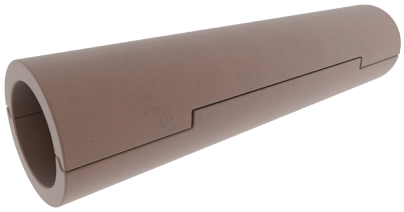



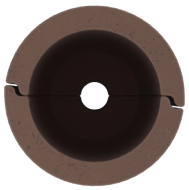

Material

Asbestite Cement, Varnish Coated

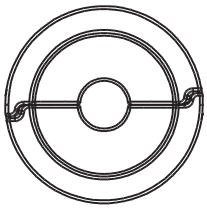

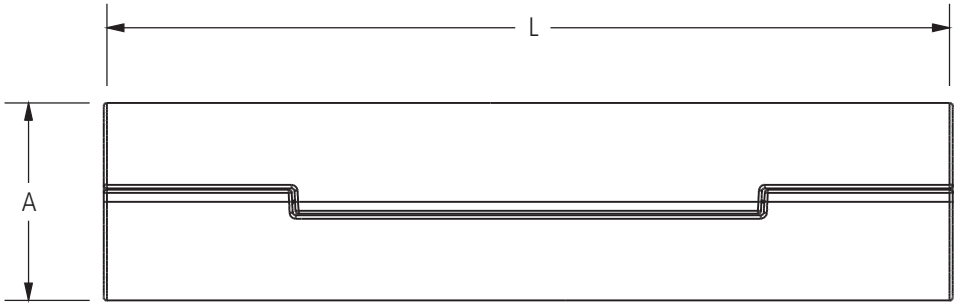

Ordering Information

Catalog Number		Cable Range	Dimensions in inches	
For Rubber Insulated Cable	For Paper* Insulated Cable		A	L
NRLA25-R2	NRLA25-P2	4/0 STR-250 MCM	1 1/2	6 13/16
NRLA40-R2	NRLA40-P2	300 MCM - 400 MCM	1 3/4	7 9/16
NRLA50-R2	NRLA50-P2	500 MCM	1 7/8	9 7/16
NRLA75-R2	NRLA75-P2	750 MCM	2 1/8	8 7/8

* For use with regular or long limiter link types NRLA-P3 and NRLA-PL3.

AFL's Dossert® product line offers a wide range of substation accessories in low voltage up to 765 kV applications in bronze or aluminum materials.

© 2011, AFL, all rights reserved. PP-3-00117, Revision 4, 11.12.2025
Specifications are subject to change without notice.

Type NRLA-1 Insulating Sleeve for Types NRLA-P, NRLA-R, and NRLA-PL Limiter Link Assemblies

A MYPAR molded insulating sleeve for use with limiter link assemblies. This two section unit is provided with interlocking ends to form a smooth junction. Its use simplifies taping and improves the accessibility to the enclosed limiter.



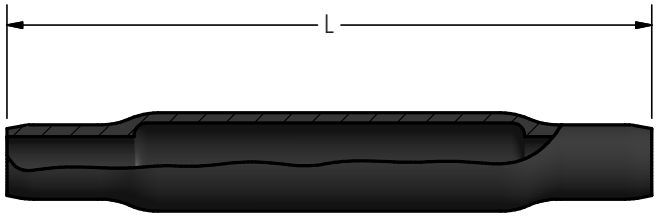

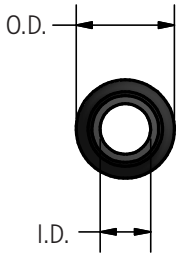

Ordering Information

Catalog Number	Cable Range	Diameter Over Cable Insulation (I.D.)	Dimensions in inches	
			L	O.D.
NRLA25-1	4/0 STR - 250 MCM	Diameter over cable insulation to be specified on order.	12 7/8	2
NRLA40-1	300 MCM - 400 MCM		13 5/8	2 1/4
NRLA50-1	500 MCM		16	2 7/16
NRLA75-1	750 MCM		16 1/4	2 5/8

AFL's Dossert® product line offers a wide range of substation accessories in low voltage up to 765 kV applications in bronze or aluminum materials.

© 2011, AFL, all rights reserved. PP-3-00114, Revision 3, 11.12.2025
Specifications are subject to change without notice.

Types LLA-2R123, LLA-2P123 Limiter Terminal Assembly

A cable terminal which serves as both a fuse and connector. The fusible element has a time-current characteristic which will enable it to clear faults severe enough to cause cable insulation damage. Unlike a fuse, the limiter will not clear a circuit on system overloads of short period.

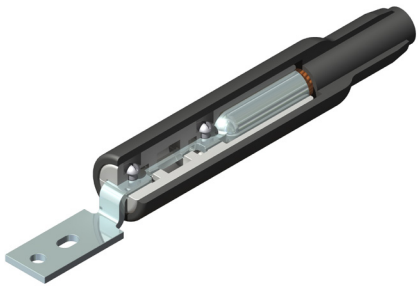

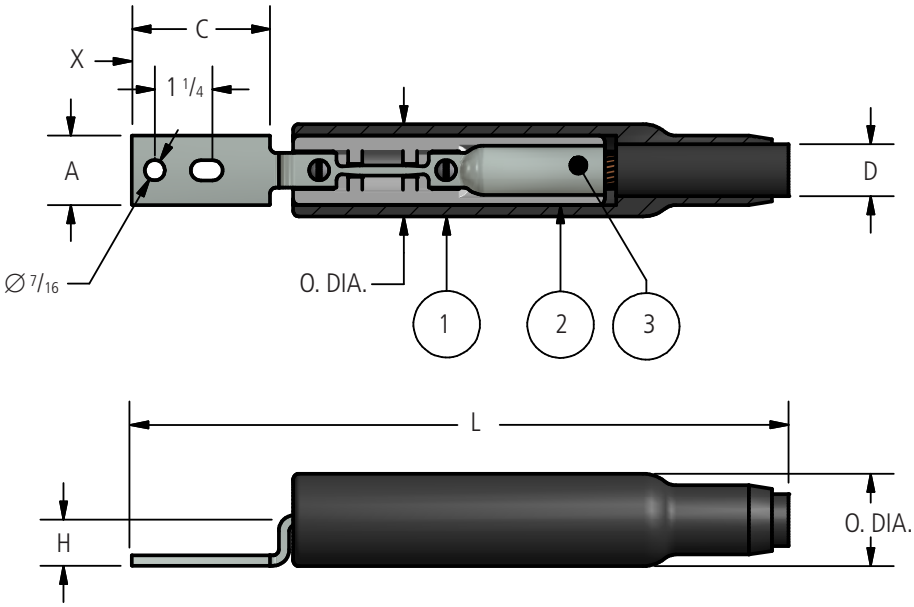

Elements

Type No.	Name
LLA-2P1	1 Insulating Sleeve
LLA-2P2	2 Shell
LLA-2R3 OR LL1-2P3	3 Limiter Terminal

Ordering Information

Catalog Number		Cable Size	No. of Indents	Dimensions in inches						
For Rubber Insulated Cable	For Paper Insulated Cable*			A	C	D	L	H	X	O.D.
LLA21-2R123	LLA21-2P123	4/0 STR	1	1	2 3/16	Diameter over cable insulation to be specified on order.	11 5/8	7/8	7/16	2
LLA25-2R123	LLA25-2P123	250 MCM	1	1 3/32	2 3/16		11 5/8	7/8	7/16	2
LLA30-2R123	LLA30-2P123	300 MCM	2	1 3/16	2 5/16		13 1/4	1	1/2	2 7/16
LLA35-2R123	LLA35-2P123	350 MCM	2	1 9/32	2 5/16		13 1/4	1	1/2	2 7/16
LLA40-2R123	LLA40-2P123	400 MCM	2	1 13/32	2 5/16		13 1/4	1	1/2	2 7/16
LLA50-2R123	LLA50-2P123	500 MCM	2	1 1/2	2 3/4		13 5/8	1	1/2	2 7/16
LLA75-2R123	LLA75-2P123	750 MCM	2	1 15/16	2 3/4		13 5/8	1	1/2	2 7/16

* Closed end of sockets are sealed to make sockets oil tight.

AFL's Dossert® product line offers a wide range of substation accessories in low voltage up to 765 kV applications in bronze or aluminum materials.

© 2011, AFL, all rights reserved. PP-3-00141, Revision 2, 11.12.2025
Specifications are subject to change without notice.

Type LLA-2PL123 Long Limiter Terminal Assembly for Paper Insulated Cable*

A cable terminal which serves as both a fuse and a connector. The fusible element has a time-current characteristic which will enable it to clear faults severe enough to cause cable insulation damage. Unlike a fuse, the limiter will not clear a circuit on system overloads of short period.

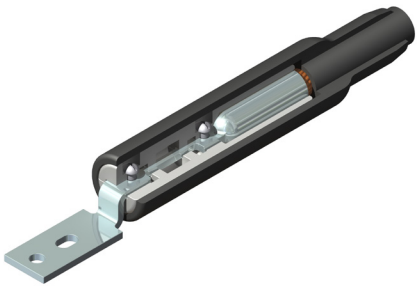

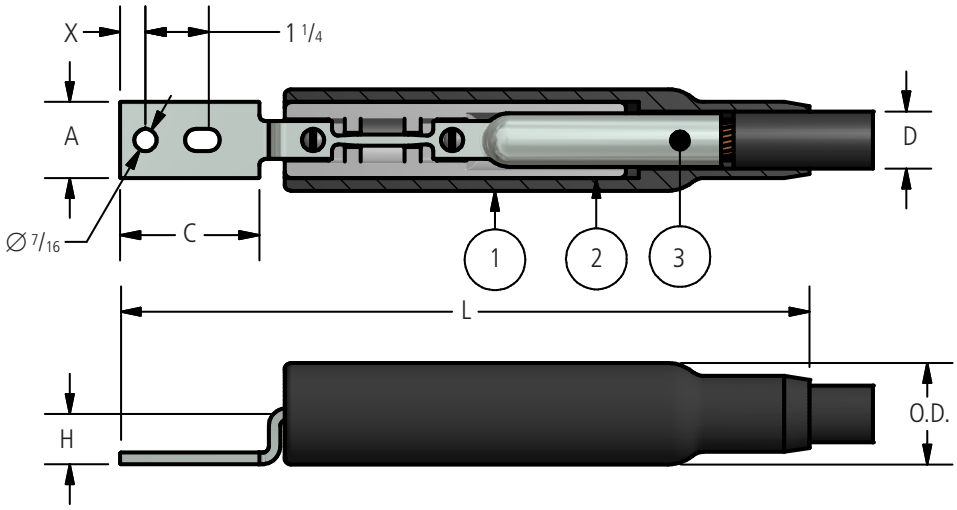

Elements

Type No.	Name
LLA-2P1	1 Insulating Sleeve
LLA-2P2	2 Shell
LLA-2PL3	3 Long Limiter Terminal

Ordering Information

Catalog Number	Cable Size	No. of Indents	Dimensions in inches						
			A	C	D	L	H	X	O.D.
LLA21-2PL123	4/0 STR	1	1	2 3/16	Diameter over cable insulation to be specified on order.	11 5/8	7/8	7/16	2
LLA25-2PL123	250 MCM	1	1 3/32	2 3/16		11 5/8	7/8	7/16	2
LLA30-2PL123	300 MCM	2	1 3/16	2 5/16		13 1/4	1	1/2	2 7/16
LLA35-2PL123	350 MCM	2	1 9/32	2 5/16		13 1/4	1	1/2	2 7/16
LLA40-2PL123	400 MCM	2	1 13/32	2 5/16		13 1/4	1	1/2	2 7/16
LLA50-2PL123	500 MCM	2	1 1/2	2 3/4		13 5/8	1	1/2	2 7/16
LLA75-2PL123	750 MCM	2	1 15/16	2 3/4		13 5/8	1	1/2	2 7/16

* Closed end of sockets are sealed to make sockets oil tight.

AFL's Dossert® product line offers a wide range of substation accessories in low voltage up to 765 kV applications in bronze or aluminum materials.

© 2011, AFL, all rights reserved. PP-3-00096, Revision 2, 11.12.2025
Specifications are subject to change without notice.

Types LLA-2R3, LLA-2P3 Limiter Terminal

The limiter terminal acts as a cable terminal as well as a current limiting fuse. The fusible section is made to close tolerances to insure consistent conformity with the fusing time-current curves. The limiter terminal will clear on severe loads or faults but will not clear on system overloads of short period.

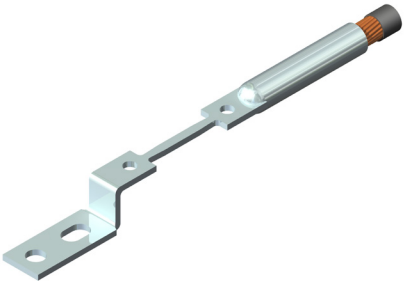

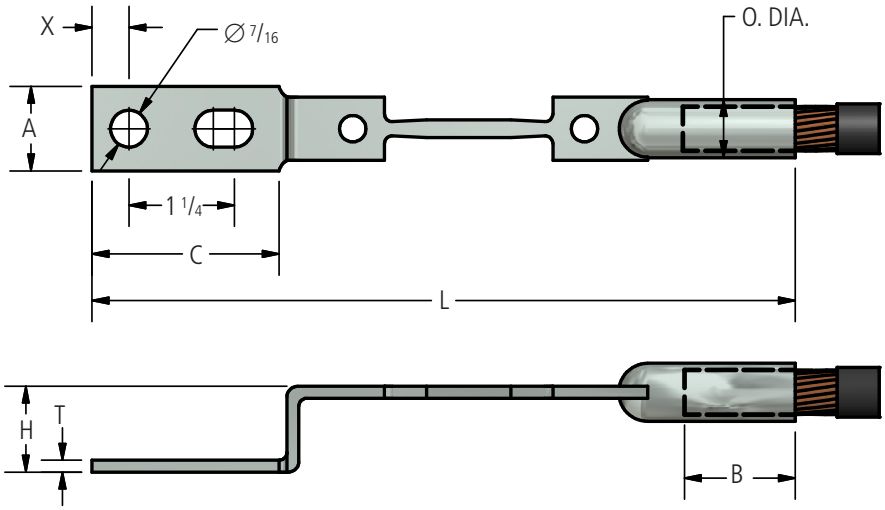

Ordering Information

Catalog Number		Cable Size	No. of Indents	Dimensions ininches							
For Rubber Insulated Cable	For Paper* Insulated Cable			A	B	C	H	L	O	T	X
LLA21-2R3	LLA21-2P3	4/0 STR	1	1	1 7/8	2 3/16	7/8	8 1/4	11/16	5/32	7/16
LLA25-2R3	LLA25-2P3	250 MCM	1	1 3/32	1 7/8	2 3/16	7/8	8 1/4	3/4	5/32	7/16
LLA30-2R3	LLA30-2P3	300 MCM	2	1 3/16	2	2 5/16	1	8 7/8	13/16	3/16	1/2
LLA35-2R3	LLA35-2P3	350 MCM	2	1 9/32	2	2 5/16	1	8 7/8	7/8	3/16	1/2
LLA40-2R3	LLA40-2P3	400 MCM	2	1 13/32	2 1/8	2 5/16	1	9	31/32	3/16	1/2
LLA50-2R3	LLA50-2P3	500 MCM	2	1 1/2	2 5/8	2 3/4	1	10	1 1/16	7/32	1/2
LLA75-2R3	LLA75-2P3	750 MCM	2	1 15/16	2 5/8	2 3/4	1	10	1 5/16	1/4	1/2

* Closed end of sockets are sealed to make sockets oil tight.

AFL's Dossert® product line offers a wide range of substation accessories in low voltage up to 765 kV applications in bronze or aluminum materials.

© 2011, AFL, all rights reserved. PP-3-00142, Revision 2, 11.13.2024
Specifications are subject to change without notice.

Type LLA-2PL3 Long Limiter Terminal for Paper Insulated Cable*

The limiter terminal acts as a cable terminal as well as a current limiting fuse. The fusible section is made to close tolerances to insure consistent conformity with the fusing time-current curves. The limiter terminal will clear on severe loads or faults but will not clear on system overloads of short period.

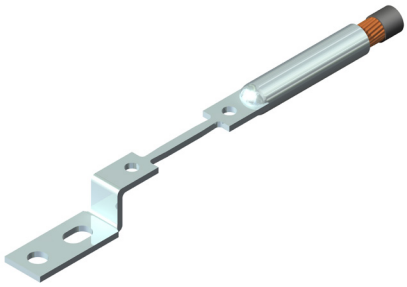

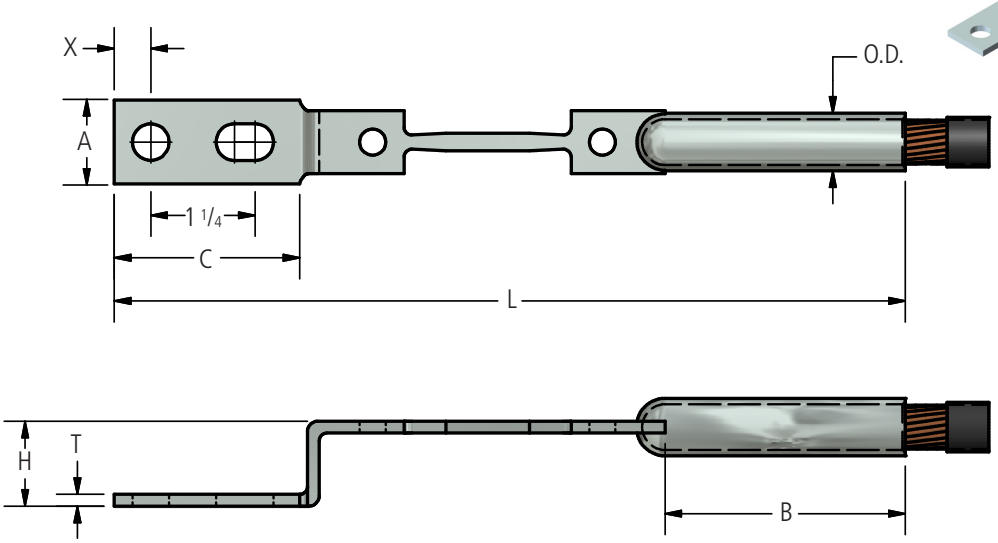

Ordering Information

Catalog Number	Cable Size	No. of Indents	Dimensions in inches							
			A	B	C	H	L	O	ST	X
LLA21-2PL3	4/0 STR	1	1	3 5/8	2 3/16	7/8	10	11/16	5/32	7/16
LLA25-2PL3	250 MCM	1	1 3/32	3 5/8	2 3/16	7/8	10	3/4	5/32	7/16
LLA30-2PL3	300 MCM	2	1 3/16	3 3/4	2 5/16	1	10 5/8	13/16	3/16	1/2
LLA35-2PL3	350 MCM	2	1 9/32	3 3/4	2 5/16	1	10 5/8	7/8	3/16	1/2
LLA40-2PL3	400 MCM	2	1 13/32	3 7/8	2 5/16	1	10 3/4	31/32	3/16	1/2
LLA50-2PL3	500 MCM	2	1 1/2	4 1/4	2 3/4	1	11 3/4	1 1/16	7/32	1/2
LLA75-2PL3	750 MCM	2	1 15/16	4 1/4	2 3/4	1	11 3/4	1 5/16	1/4	1/2

* Closed end of sockets are sealed to make sockets oil tight.

AFL's Dossert® product line offers a wide range of substation accessories in low voltage up to 765 kV applications in bronze or aluminum materials.

© 2011, AFL, all rights reserved. PP-3-00097, Revision 2, 11.13.2025
Specifications are subject to change without notice.

Type LLA-2P2 Limiter Terminal Shell for Use with Limiter Terminal Assembly Types LLA-2R123, LLA-2PL, LLA-2P123, and LLA-2PL123

A composition molded shell consisting of two symmetrical halves assembled with machine screws and nuts. Internal cavities and heat confining barriers permit fusible section of limiter to clear circuit without damage to surrounding insulation.



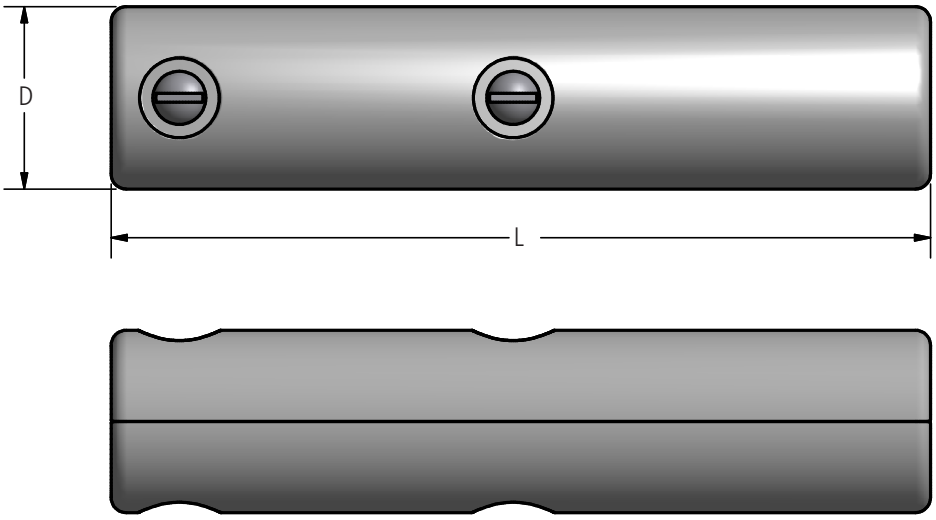

Ordering Information

Catalog Number	Cable Range	Dimensions in inches	
		D-Diameter	L
LLA25-2P2	4/0 STR - 250 MCM	1 1/2	5 3/4
LLA50-2P2	300 MCM - 500 MCM	1 7/8	7 1/16
LLA75-2P2	750 MCM	1 7/8	7 1/16

AFL's Dossert® product line offers a wide range of substation accessories in low voltage up to 765 kV applications in bronze or aluminum materials.

© 2011, AFL, all rights reserved. PP-3-00095, Revision 2, 11.13.2025
Specifications are subject to change without notice.

Type LLA-2P1 Limiter Terminal Insulating Sleeve for Use with Types LLA-2R123, LLA-2P123, and LLA-2PL123

A MYPAR molded insulating sleeve for use with limiter terminal assemblies. Designed to provide a close fit over shell type LLA-2P2 and specified cable insulation. Its use simplifies taping and improves the accessibility to and easy replacement of a blown limiter.

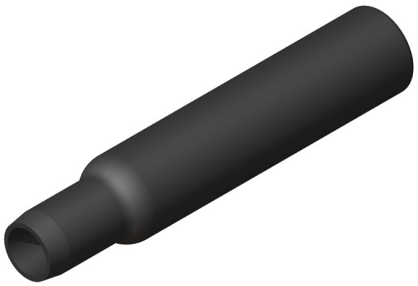

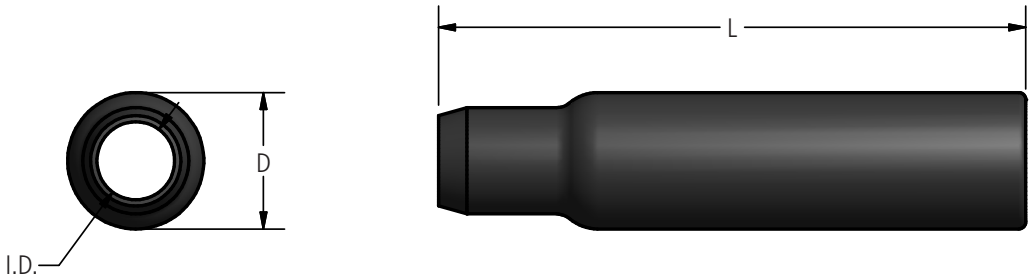

Ordering Information

Catalog Number	Cable Range	Dimensions in inches		
		D	L	I.D.
LLA25-2P1	4/0 STR - 250 MCM	2	9	*
LLA75-2P1	300 MCM - 500 MCM	2 7/16	10 1/2	*

* Diameter over cable insulation to be specified on order.

AFL's Dossert® product line offers a wide range of substation accessories in low voltage up to 765 kV applications in bronze or aluminum materials.

© 2011, AFL, all rights reserved. PP-3-00094, Revision 2, 11.13.2025
Specifications are subject to change without notice.

Types ML-R123, ML-P123 MICON Limiter Assembly

The MICON limiter assembly is designed to establish a fusible connecting point at a MICON outlet. The cable is simply installed by making a compression connection on the socket end. The MICON connecting end is then secured through use of the cable receptacle Type MA and tapered compression sleeve Type C. MICON limiters which have cleared a faulted or over loaded circuit can be readily replaced.



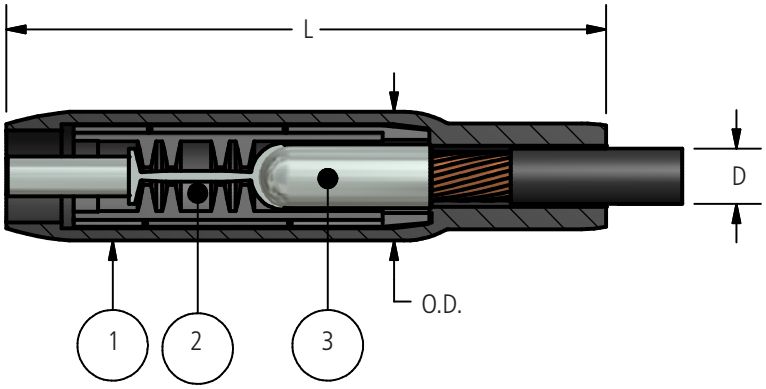

Elements

Type No.	Name
ML-1	1 Insulating Sleeve
ML-R2	2 Shell
ML-P2	
ML-R3	3 Limiter
ML-P3	

Ordering Information

Catalog Number		Cable Size	Recommended MICON Outlet Connection		Indents in Cable Socket	Dimensions in inches		
For Rubber Insulated Cable*	For Paper Insulated Cable		Cable Receptacle	Compression Sleeve		D	L	O.D.
ML21-R123	ML21-P123	4/0 STR	MA-21	C21-21	1	Diameter over cable insulation to be specified on order.	9 7/8	1 7/8
ML25-R123	ML25-P123	250 MCM	MA-25	C25-25	1		9 7/8	1 7/8
ML30-R123	ML30-P123	300 MCM	MA-30	C30-30	2		10 3/8	2 3/16
ML35-R123	ML35-P123	350 MCM	MA-40	C40-35	2		10 3/8	2 3/16
ML40-R123	ML40-P123	400 MCM	MA-40	C40-40	2		10 3/8	2 3/16
ML50-R123	ML50-P123	500 MCM	MA-50	C50-50	2		11 3/4	2 3/8
ML75-R123	ML75-P123	750 MCM	MA-50-88	C50-50	2		12 1/4	2 9/16

* Closed end of sockets are sealed to make sockets oil tight.

AFL's Dossert® product line offers a wide range of substation accessories in low voltage up to 765 kV applications in bronze or aluminum materials.

© 2011, AFL, all rights reserved. PP-3-00143, Revision 2, 11.13.2025
Specifications are subject to change without notice.

Type ML-PL123 MICON Long Limiter Assembly for Paper Insulated Cable*

The MICON long limiter assembly is designed to establish a fusible connecting point at a MICON outlet for oil-filled paper insulated cable. The cable is simply installed by making a compression connection on the socket end and by a cable receptacle and tapered sleeve, types MA and C, on the MICON end. MICON Limiters which have cleared a faulted or over loaded circuit can be readily replaced.



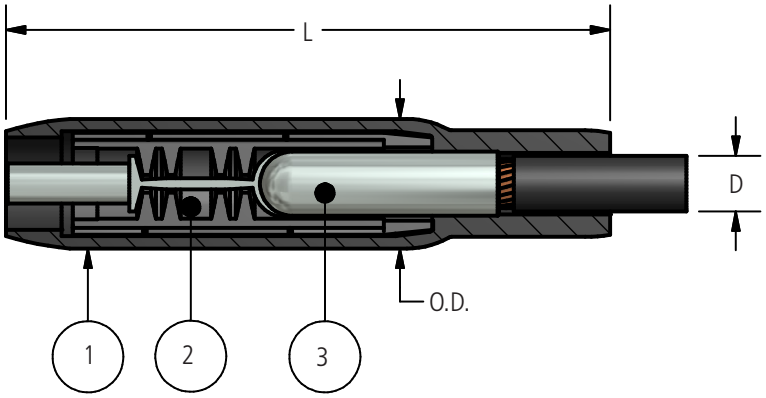

Elements

Type No.	Name
ML-1	1 Insulating Sleeve
ML-PL2	2 Shell
ML-PL3	3 Long Limiter

Ordering Information

Catalog Number	Cable Size	Recommended MICON Outlet Connection		Indents in Cable Socket	Dimensions in inches		
		Cable Receptacle	Compression Sleeve		D	L	O.D.
ML21-PL123	4/0 STR	MA-21	C21-21	1	Diameter over cable insulation to be specified on order.	9 7/8	1 7/8
ML25-PL123	250 MCM	MA-25	C25-25	1		9 7/8	1 7/8
ML30-PL123	300 MCM	MA-30	C30-30	2		10 3/8	2 3/16
ML35-PL123	350 MCM	MA-40	C40-35	2		10 3/8	2 3/16
ML40-PL123	400 MCM	MA-40	C40-40	2		10 3/8	2 3/16
ML50-PL123	500 MCM	MA-50	C50-50	2		11 3/4	2 3/8
ML75-PL123	750 MCM	MA-50-88	C50-50	2		12 1/4	2 9/16

* Closed end of sockets are sealed to make sockets oil tight.

AFL's Dossert® product line offers a wide range of substation accessories in low voltage up to 765 kV applications in bronze or aluminum materials.

© 2011, AFL, all rights reserved. PP-3-00111, Revision 2, 11.13.2025
Specifications are subject to change without notice.

Types ML-R3, ML-P3 MICON Limiter for Use with MICON Limiter Assembly Types ML-R123 and ML-P123

The MICON limiter is designed to provide a fusible connecting point to the MICON outlet. The fusible section is made to close tolerances to ensure consistent conformity with the fusing time-current curves. The limiter will clear on severe loads or faults but will not clear on system overloads of short period.

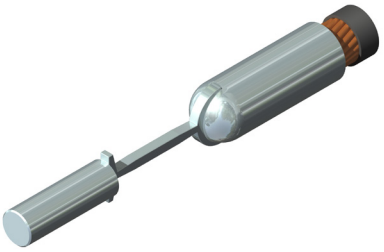

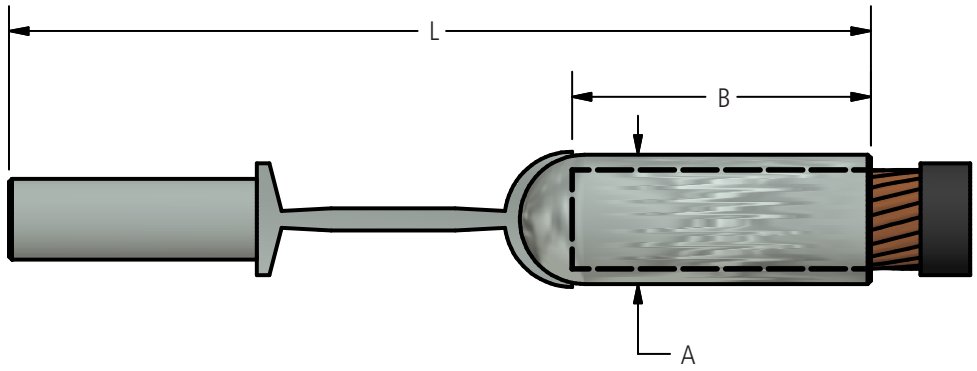

Ordering Information

Catalog Number		Cable Size	Indents in Cable Socket	Dimensions in inches		
For Rubber Insulated Cable	For Paper* Insulated Cable			A**	B	L
ML21-R3	ML21-P3	4/0 STR	1	11/16	1 7/8	6 1/8
ML25-R3	ML25-P3	250 MCM	1	3/4	1 7/8	6 1/8
ML30-R3	ML30-P3	300 MCM	2	13/16	2	6 5/8
ML35-R3	ML35-P3	350 MCM	2	7/8	2	7
ML40-R3	ML40-P3	400 MCM	2	31/32	2 1/8	7
ML50-R3	ML50-P3	500 MCM	2	1 1/16	2 3/4	8 1/8
ML75-R3	ML75-P3	750 MCM	2	1 5/16	2 3/4	9 1/8

* Closed end of sockets are sealed to make sockets oil tight.
** Diameter.

AFL's Dossert® product line offers a wide range of substation accessories in low voltage up to 765 kV applications in bronze or aluminum materials.

© 2011, AFL, all rights reserved. PP-3-00108, Revision 2, 11.5.2025
Specifications are subject to change without notice.

Type ML-PL3 MICON Long Limiter for Paper Insulated Cable* for Use with MICON Long Limiter Assembly Type ML-PL123

The MICON long limiter, for oil filled paper insulated cable, is designed to provide a fusible connecting point to the MICON outlet. The fusible section is made to close tolerances to insure consistent conformity with the fusing time-current curves. The limiter will clear on severe loads or faults but will not clear on system overloads of short period.

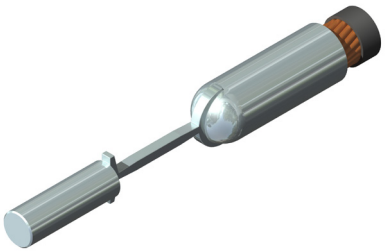

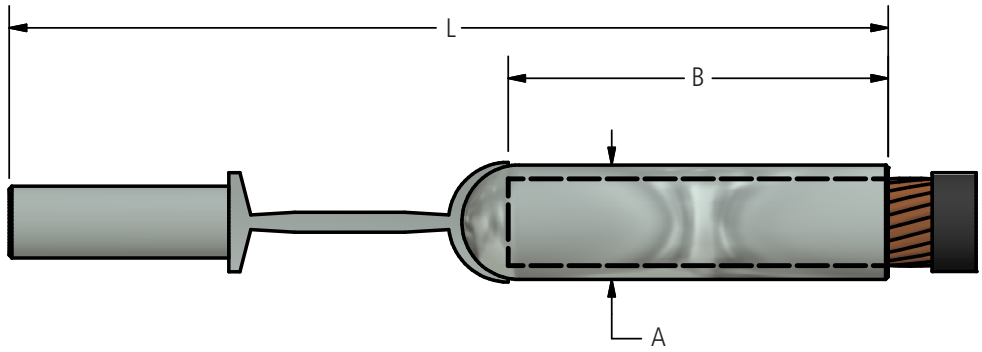

Ordering Information

Catalog Number	Cable Size	Indents in Cable Socket	Dimensions in inches		
			A**	B	L
ML21-PL3	4/0 STR	1	11/16	3	7 1/4
ML25-PL3	250 MCM	1	3/4	3 1/8	7 1/4
ML30-PL3	300 MCM	2	13/16	3 1/2	8
ML35-PL3	350 MCM	2	7/8	3 1/2	8 3/8
ML40-PL3	400 MCM	2	31/32	3 1/2	8 3/8
ML50-PL3	500 MCM	2	1 1/16	4 1/4	9 9/16
ML75-PL3	750 MCM	2	1 5/16	4 1/4	10 7/16

* Closed end of sockets are sealed to make sockets oil tight.
** Diameter.

AFL's Dossert® product line offers a wide range of substation accessories in low voltage up to 765 kV applications in bronze or aluminum materials.

© 2011, AFL, all rights reserved. PP-3-00112, Revision 2, 11.25.2025
Specifications are subject to change without notice.

Types ML-R2, ML-P2 Limiter Shell for Use with MICON Limiter Assembly Types ML-R123, ML-P123, and ML-PL123

A composition molded shell consisting of two symmetrical halves with interlocking fingers. Internal cavities and heat confining barriers permit fusible section of MICON limiter to clear circuit without damage to surrounding insulation. Two shells constitute a pair as illustrated and defined by pairs in catalog numbers. Shells may be ordered independently by pairs for replacement.

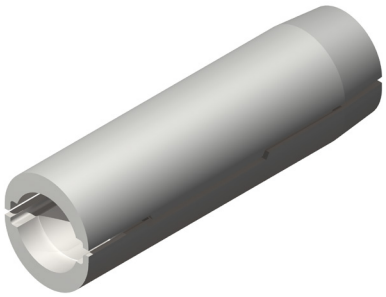

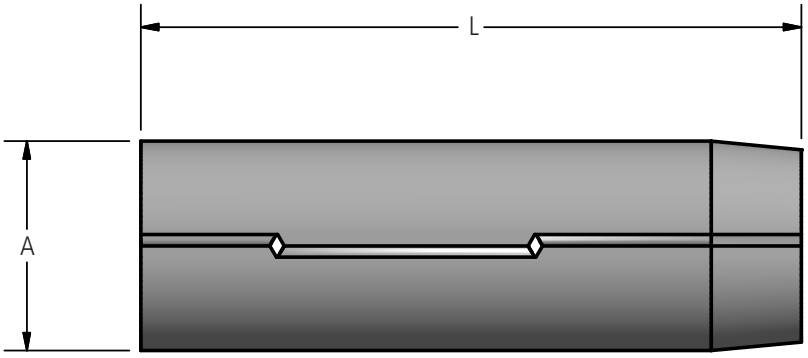

Ordering Information

Catalog Number		Cable Range	Dimensions in inches	
For Rubber Insulated Cable	For Paper* Insulated Cable		L	A**
ML21-R2	ML21-P2	4/0 STR	5 15/32	1 17/32
ML25-R2	ML25-P2	250 MCM	5 15/32	1 17/32
ML30-R2	ML40-P2	300-400 MCM	5 15/16	1 21/32
ML40-R2	ML40-P2	300-400 MCM	5 15/16	1 21/32
ML50-R2	ML50-P2	500 MCM	7 1/16	1 13/16
ML75-R2	ML75-P2	750 MCM	7 5/16	2 3/32

* For use with regular or long MICON limiter types ML-P3 and ML-PL3.
** Diameter

AFL's Dossert® product line offers a wide range of substation accessories in low voltage up to 765 kV applications in bronze or aluminum materials.

© 2011, AFL, all rights reserved. PP-3-00144, Revision 3, 11.25.2025
Specifications are subject to change without notice.

Type ML-1 MICON Limiter Insulating Sleeve for Use with MICON Limiter Assembly Types ML-R123, ML-P123, and ML-PL123

A two piece MYPAR sleeve for insulating the MICON limiter and shell assembly. The sleeve is designed to establish a snug fit on the MICON outlet and cable insulation reducing the operation of taping to a minimum.



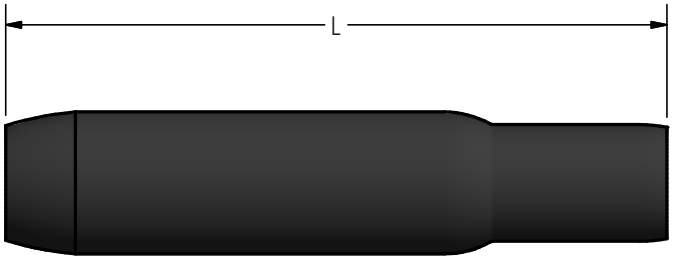

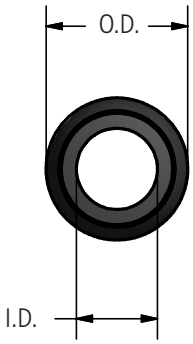

Ordering Information

Catalog Number	Cable Range	Diameter Over Cable Insulation (I.D.)	Dimensions in inches	
			L	O.D.
ML25-1	4/0 STR - 250 MCM	Diameter over cable insulation to be specified on order.	9 3/4	1 29/32
ML40-1	300-400 MCM		10 3/8	2 7/32
ML50-1	500 MCM		11 3/4	2 21/32
ML75-1	750 MCM		12 1/4	2 5/8

AFL's Dossert® product line offers a wide range of substation accessories in low voltage up to 765 kV applications in bronze or aluminum materials.

© 2011, AFL, all rights reserved. PP-3-00110, Revision 2, 11.25.2025
Specifications are subject to change without notice.

Types BCLA-R123, BCLA-P123, and BCLA-PL123 Limiter Tap Assembly for Rubber or Paper Insulated Cable

A limiter tap for making tap connections from a continuous or cable ring bus in a transformer vault or manhole junction. Available for use with rubber or oil-filled paper insulated cable. The run section insulating cover and limiter insulating sleeve can be furnished on a number of sizes to offer complete molded insulation and reduce taping to a minimum. Information on the availability of complete or partial insulation will be readily furnished upon request.

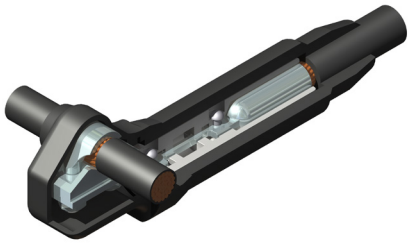

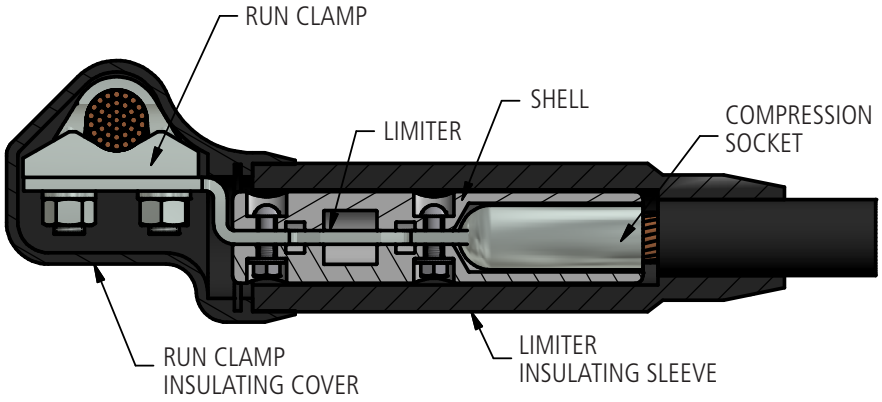

Type Description

Assembly Type Number	Application
BCLA-R123	For use with rubber insulated cable.
BCLA-P123	For use with paper insulated cable – furnished with regular length compression socket, but with closed end of socket sealed to make it oil tight.
BCLA-PL123	For use with paper insulated cable – furnished with long length compression socket, but with closed end of socket sealed to make it oil tight.

Ordering Information

Catalog Number	Description	Type Equivalent
BCLA-1H	Run clamp insulating cover	-
BCLA-1S	Limiter insulating sleeve	LLA-2P1
BCLA-2	Shell	LLA-2P2
BCLA-3M	Run clamp	-
BCLA-3F	Limiter	LLA-2R3
		LLA-2P3
		LLA-2PL3

AFL's Dossert® product line offers a wide range of substation accessories in low voltage up to 765 kV applications in bronze or aluminum materials.

© 2011, AFL, all rights reserved. PP-3-00139, Revision 2, 11.25.2025
Specifications are subject to change without notice.

Type RLB-E Renewable MICON Limiter Link Assembly

The renewable MICON limiter link assembly is designed to establish a fusible connection to a MICON unit. The renewable link offers a quick and inexpensive means of re-energizing a cleared circuit. The renewable link also provides the possibility of regulating the circuit protection to various levels of current by choice of link ampere capacity.



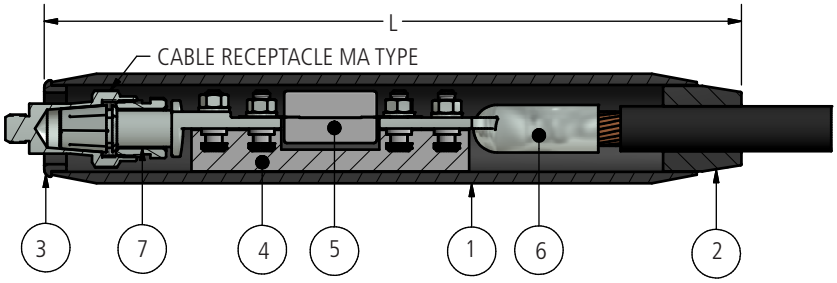

Elements

Type No.	Name
RLM-1	1 Insulating sleeve
RLM-2	2 Insulating brushing
RLM-3	3 Insulating adaptor
RLM-50B	4 Mounting block
F	5 Limiter link
RL-2	6 Compression Terminal
RLB-2	7 Micon Terminal

Ordering Information

Catalog Number	Cable Size	Recommended for Use with RLB-E		Indents in Cable Socket	Dimensions in inches		Renewable Limiter Link Furnished*	
		Cable Receptacle	Compression Sleeve		D	L	Catalog Number	Amp. Capacity
RLB2-E	6 STR	MA-21	C21-21	1	Diameter over cable insulation to be specified on order.	15 1/2	F50	50
RLB4-E	4 STR	MA-21	C21-21	1		15 1/2	F75	75
RLB6-E	2 STR	MA-21	C21-21	1		15 1/2	F100	100
RLB8-E	1 STR	MA-21	C21-21	1		15 1/2	F100	100
RLB10-E	1/0 STR	MA-21	C21-21	1		15 1/2	F150	150
RLB13-E	2/0 STR	MA-21	C21-21	1		15 1/2	F150	150
RLB17-E	3/0 STR	MA-21	C21-21	1		15 1/2	F200	200
RLB21-E	4/0 STR	MA-21	C21-21	1		15 1/2	F250	250
RLB25-E	250 MCM	MA-25	C25-25	1		15 1/2	F250	250
RLB30-E	300 MCM	MA-30	C30-30	2		15 1/2	F300	300
RLB35-E	350 MCM	MA-40	C40-35	2		15 1/2	F300	300
RLB40-E	400 MCM	MA-40	C40-40	2		15 1/2	F400	400
RLB50-E	500 MCM	MA-50	C50-50	2		15 1/2	F400	400

* Minimum clearing current of furnished limiter is approximately NEC rubber insulated cable rating X2.

AFL's Dossert® product line offers a wide range of substation accessories in low voltage up to 765 kV applications in bronze or aluminum materials.

© 2011, AFL, all rights reserved. PP-3-00122, Revision 2, 11.25.2025
Specifications are subject to change without notice.

Type RLM-B Limiter Mounting Block for Use with Renewable Limiter Link Assembly Types RLM-E and RLB-E

A high impact, heat resistant, fiber reinforced phenolic resin base insulating mounting block. Designed to serve as a junction for connecting lugs or terminal adapters to limiter renewable link type F. Mounting studs are solidly anchored in block during molding process. The block may be ordered separately for replacement or other applications.

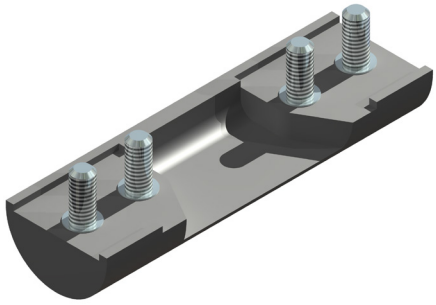

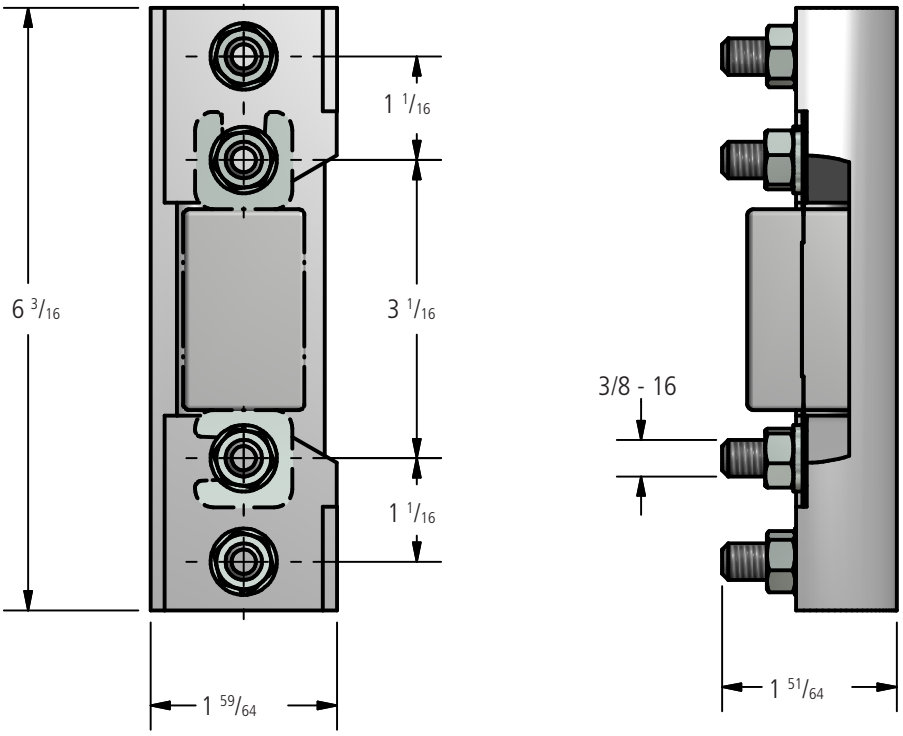

Ordering Information

Catalog Number
RLM50-B

AFL's Dossert® product line offers a wide range of substation accessories in low voltage up to 765 kV applications in bronze or aluminum materials.

© 2011, AFL, all rights reserved. PP-3-00128, Revision 2, 11.25.2025
Specifications are subject to change without notice.

Type RL-2 Compression Terminal for Use with Type RLM-B Limiter Mounting Block

A compression terminal designed to fit terminal ends of type RLM-B limiter mounting block. Closed end of lug is sealed to permit interchangeable use with rubber insulated or oil filled paper insulated cables. To insure high resistance to corrosion terminal is completely tin coated.

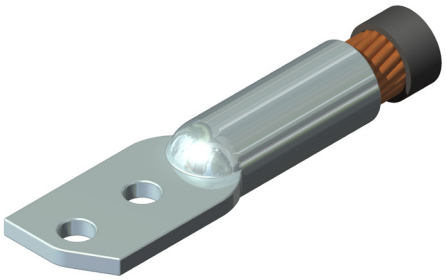

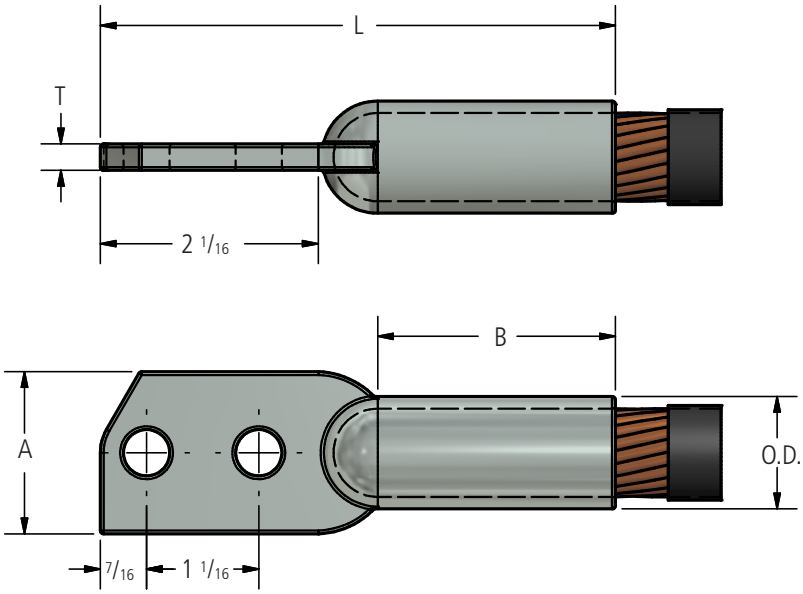

Ordering Information

Catalog Number	Cable Size	Dimensions in inches					Number of Indents	Index Number
		A	B	O.D.	L	T		
RL2-2	6 STR	1	1 1/8	5/16	3 3/4	7/32	1	7
RL4-2	4 STR	1	1 1/8	11/32	3 3/4	7/32	1	8
RL6-2	2 STR	1	1 1/4	13/32	3 15/16	7/32	1	10
RL8-2	1 STR	1	1 3/8	15/32	4 1/16	7/32	1	11
RL10-2	1/0 STR	1	1 3/8	17/32	4 1/16	7/32	1	12
RL13-2	2/0 STR	13/16	1 1/2	9/16	3 13/16	1/8	1	13
RL17-2	3/0 STR	29/32	1 1/2	5/8	3 7/8	9/64	1	14
RL21-2	4/0 STR	1	1 5/8	11/16	4 1/16	9/64	1	15
RL25-2	250 MCM	1 1/8	1 5/8	3/4	4 1/8	5/32	1	16
RL30-2	300 MCM	1 3/16	2	13/16	4 1/2	5/32	2	17
RL35-2	350 MCM	1 9/32	2	7/8	4 9/16	11/64	2	18
RL40-2	400 MCM	1 3/8	2 1/8	31/32	4 3/4	3/16	2	19
RL50-2	500 MCM	1 17/32	2 1/4	1 1/16	4 7/8	7/32	2	20

AFL's Dossert® product line offers a wide range of substation accessories in low voltage up to 765 kV applications in bronze or aluminum materials.

© 2011, AFL, all rights reserved. PP-3-00120, Revision 2, 11.15.2025
Specifications are subject to change without notice.

Type RLM-E Renewable Limiter Link Assembly

An insulating renewable limiter link assembly which serves as both a fuse and coupler. The renewable link offers a quick and inexpensive means of re-energizing cleared circuits. The renewable link also provides the possibility of regulating the circuit protection to various levels of current by choice of link ampere capacity.

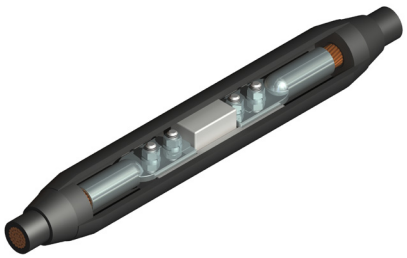

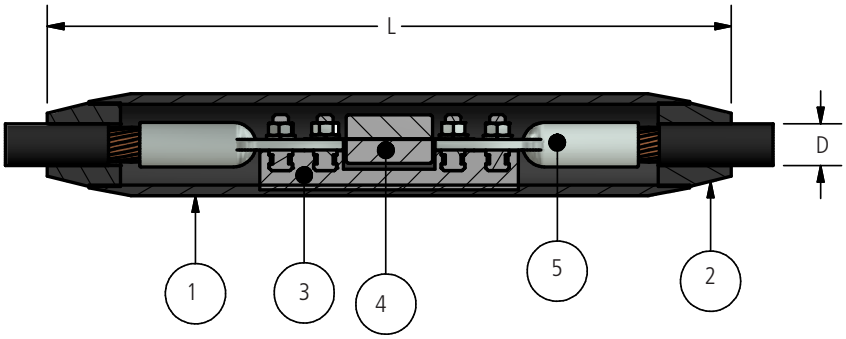

Elements

Type No.	Name
RLM-1	1 Limiter Insulating Sleeve
RLM-2	2 Limiter Insulating Bushing
RLM-50B	3 Limiter Mounting Block
F	4 Limiter Renewable Link
RL-2	5 Compression Terminal

Ordering Information

Catalog Number	Cable Size	No. of Indents	Dia. Over Cable Insulation D	L in inches	Renewable Limiter Link Furnished*	
					Catalog Number	Amp. Capacity
RLM2-E	6 STR	1	Diameter over cable insulation to be specified on order.	16 3/8	F50	50
RLM4-E	4 STR	1		16 3/8	F75	75
RLM6-E	2 STR	1		16 3/8	F100	100
RLM8-E	1 STR	1		16 3/8	F100	100
RLM10-E	1/0 STR	1		16 3/8	F150	150
RLM13-E	2/0 STR	1		16 3/8	F150	150
RLM17-E	3/0 STR	1		16 3/8	F200	200
RLM21-E	4/0 STR	1		16 3/8	F250	250
RLM25-E	250 MCM	1		16 3/8	F250	250
RLM30-E	300 MCM	2		16 3/8	F300	300
RLM35-E	350 MCM	2		16 3/8	F300	300
RLM40-E	400 MCM	2		16 3/8	F400	400
RLM50-E	500 MCM	2		16 3/8	F400	400

* Minimum clearing current of furnished limiter is approximately NEC rubber insulated cable rating X2.

AFL's Dossert® product line offers a wide range of substation accessories in low voltage up to 765 kV applications in bronze or aluminum materials.

© 2011, AFL, all rights reserved. PP-3-00129, Revision 2, 11.25.2025
Specifications are subject to change without notice.

Type RLL-E Renewable Limiter Link Coupler

A renewable type limiter link coupler for connecting rubber or paper insulated cables on end and providing a fusible element for cable protection. The cables are securely terminated at each end by a compression connector provided with a tapered sleeve and compression nut; the combination of which establishes high mechanical advantage and electrical efficiency. The fusible links are readily replaced after clearing a faulted line. Circuit protection can be established at various current levels by choice of link ampere capacity.



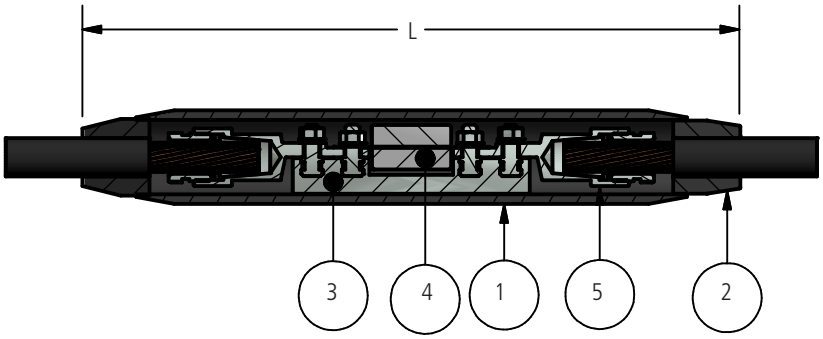

Elements

Type No.	Name
1	Insulating Sleeve
2	Insulating Bushing
3	Limiter Mounting Block
4	Limiter Renewable Link
5	Socket Terminal

Ordering Information

Catalog Number
RLL-E

AFL's Dossert® product line offers a wide range of substation accessories in low voltage up to 765 kV applications in bronze or aluminum materials.

© 2011, AFL, all rights reserved. PP-3-00124, Revision 2, 11.25.2025
Specifications are subject to change without notice.

Type RLBC-E Renewable Limiter Link Connector

A renewable MICON Limiter connector for making a fusible connection to an outlet of a MICON. Can be used for either rubber or paper insulated cable. The fusible assembly is connected to the MICON through use of the MICON terminal (3) and a standard cable receptacle, type MA (not furnished with assembly unless specified).

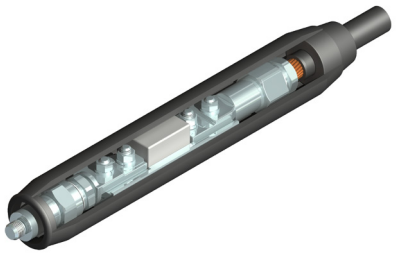

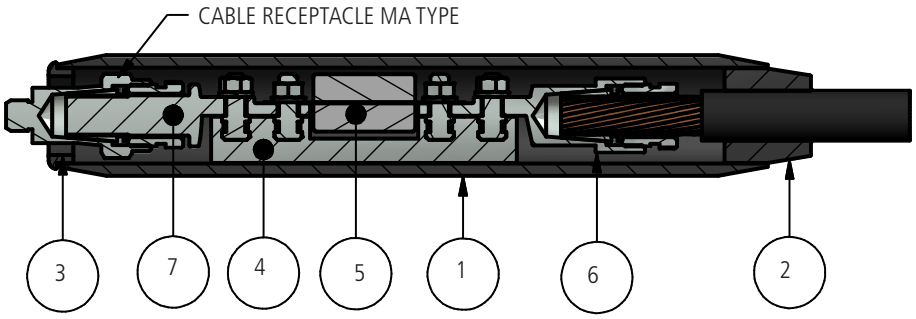

Elements

Type No.	Name
1	Insulating Sleeve
2	Insulating Bushing
3	Insulating Adapter
4	Limiter Mounting Block
5	Limiter Renewable Link
6	Socket Terminal
7	MICON Terminal

Ordering Information

Catalog Number
RLBC-E

AFL's Dossert® product line offers a wide range of substation accessories in low voltage up to 765 kV applications in bronze or aluminum materials.

© 2011, AFL, all rights reserved. PP-3-00121, Revision 2, 11.26.2025
Specifications are subject to change without notice.

Type RLLA-E Special Renewable Link Connector for Rubber Oil-Filled, Paper Insulated Cable

For making fusible connections to a flat bar bus or contact pad. Terminal pad can be furnished to any specified drilling and set at any desired angle. Limiter link is supplied as a unit with the fusible link housed in a shell to confine the arc established when link fuses.

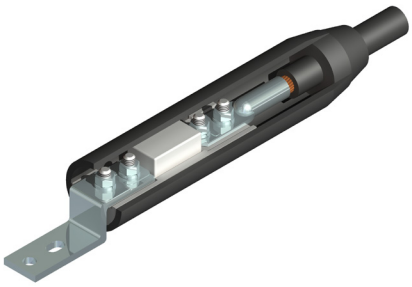

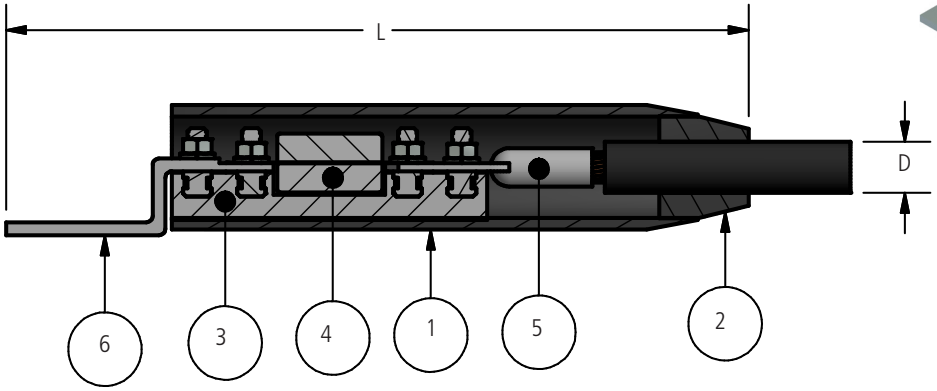

Elements

Type No.	Name
1	Insulating Sleeve
2	Insulating Bushing
3	Limiter Mounting Block
4	Limiter Renewable Link
5	Compression Terminal
6	Terminal

Ordering Information

Catalog Number
RLLA-E

AFL's Dossert® product line offers a wide range of substation accessories in low voltage up to 765 kV applications in bronze or aluminum materials.

© 2011, AFL, all rights reserved. PP-3-00123, Revision 2, 11.26.2025
Specifications are subject to change without notice.

Type NCLA-E Straight Tap Connector

For providing a fusible tap connection to a continuous or ring bus.
The renewable link can be readily replaced on cleared connectors.



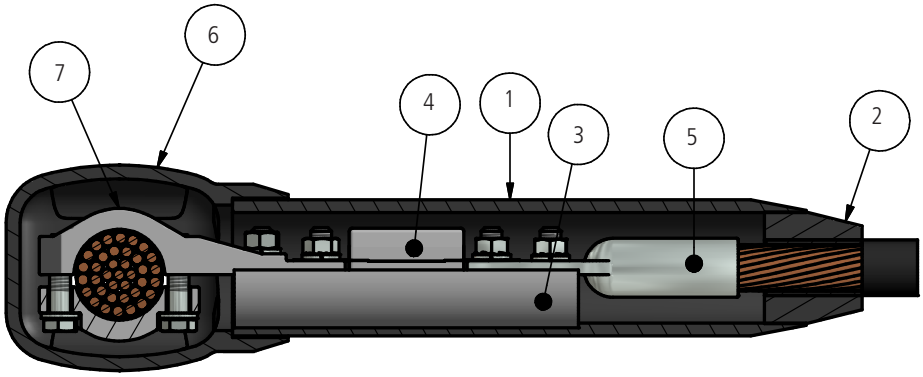

Elements

Type No.	Name
1	Insulating Sleeve
2	Insulating Bushing
3	Limiter Mounting Block
4	Limiter Renewable Link
5	Compression Terminal
6	Insulating Hood
7	Run Clamp

Ordering Information

Catalog Number
NCLA-E

AFL's Dossert® product line offers a wide range of substation accessories in low voltage up to 765 kV applications in bronze or aluminum materials.

© 2011, AFL, all rights reserved. PP-3-00113, Revision 2, 11.26.2025
Specifications are subject to change without notice.

Types CRC and CRC-C Insulating Caps

An insulating cap to protect unused outlets on types CB10R and CB6R fusible crab connectors. The cap is slipped over unused outlets and held securely in position with several turns of rubber tape.

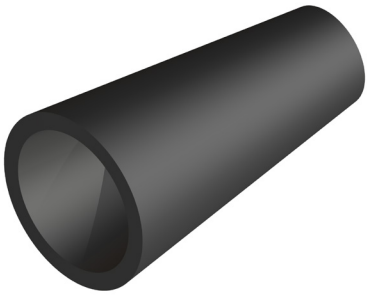

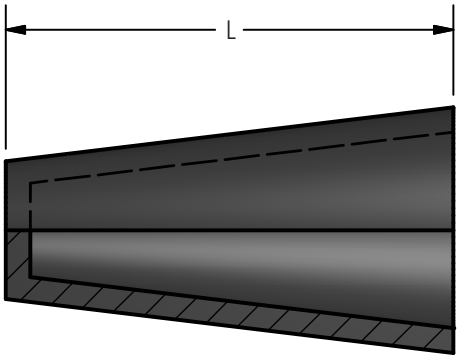

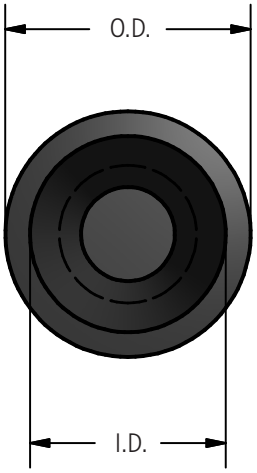

Ordering Information

Catalog Number	Application	Dimensions in inches		
		I.D.	O.D.	L
CRC-21	On 4/0 Tubing Outlet	2 7/64	2 15/32	4 3/16
CRC-50	On 500 MCM Tubing Outlet	2 5/32	2 33/64	4 9/16
CRC-50C	On 500 MCM Cable Outlet	27/32	1 1/4	2 3/8

AFL's Dossert® product line offers a wide range of substation accessories in low voltage up to 765 kV applications in bronze or aluminum materials.

© 2011, AFL, all rights reserved. PP-3-00140, Revision 2, 11.26.2025
Specifications are subject to change without notice.

Type CRW
Thermal Insulating Wedge

A thermal insulating wedge which is placed over the compressed tubular sections of outlets on types CB10R and CB6R fusible crab connectors. The wedges provide a thermal insulating protection from heat generated by fusible sections for the rubber taping which is wound from the cable insulation over the tubular outlet to the molded insulation of the connector.



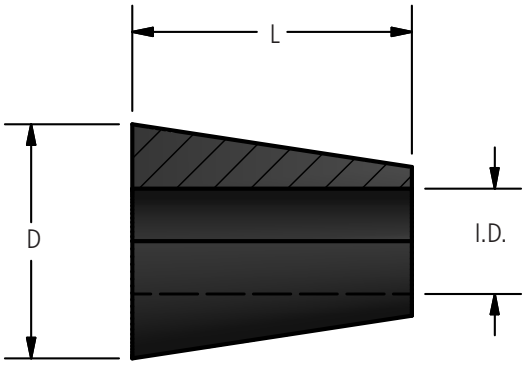



Ordering Information

Catalog Number	Application	Dimensions in inches		
		I..D.	D	L
CRW-21	On 4/0 Tubing Outlet	3/4	2 1/8	2 3/4
CRW-50	On 500 MCM Tubing Outlet	1 1/8	2 3/16	3

AFL's Dossert® product line offers a wide range of substation accessories in low voltage up to 765 kV applications in bronze or aluminum materials.

© 2011, AFL, all rights reserved. PP-3-00081, Revision 2, 11.26.2025
Specifications are subject to change without notice.

Type DPC Compression Coupler

A seamless sleeve coupler for splicing two cables end to end. This coupler is designed to fit the assembling dies of all standard hydraulic presses. Installation is quickly effected by slipping the connector over the free cable ends and forming indentations. Made of a pure high conductivity copper and tin coated.

This style also available with an internal barrier for oil seal connections.
Catalog Number: DPCP

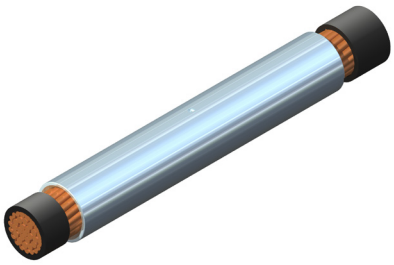

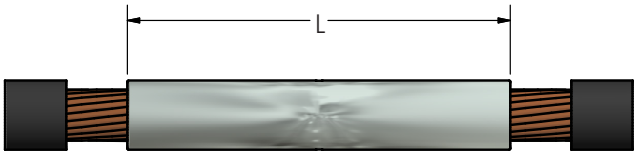

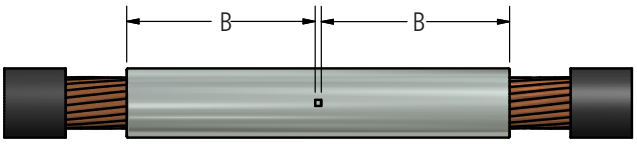

Ordering Information

Catalog Number	Cable Size D	No. of Indents per Cable	Dimensions in inches	
			B	L
DPC-1	8 STR	1	1/2	1 1/16
DPC-2	6 STR	1	1 1/8	2 5/16
DPC-4	4 STR	1	1 1/8	2 5/16
DPC-5	3 STR	1	1 1/4	2 5/8
DPC-6	2 STR	1	1 1/4	2 5/8
DPC-8	1 STR	1	1 7/16	3
DPC-10	1/0 STR	1	1 7/16	3
DPC-13	2/0 STR	1	1 1/2	3 1/8
DPC-17	3/0 STR	1	1 1/2	3 1/8
DPC-21	4/0 STR	1	1 5/8	3 3/8
DPC-25	250 MCM	1	1 5/8	3 3/8
DPC-30	300 MCM	2	2 1/16	4 1/4
DPC-35	350 MCM	2	2 1/16	4 1/4
DPC-40	400 MCM	2	2 1/8	4 3/8
DPC-50	500 MCM	2	2 1/4	4 5/8
DPC-55	550 MCM	2	2 5/8	5 3/8
DPC-60	600 MCM	2	2 11/16	5 1/2
DPC-65	650 MCM	2	2 13/16	5 3/4
DPC-75	750 MCM	2	2 7/8	5 7/8
DPC-80	800 MCM	2	2 15/16	6
DPC-85	850 MCM	2	2 15/16	6
DPC-100	1000 MCM	2	3	6 1/8
DPC-125	1250 MCM	2	3 1/4	6 5/8
DPC-130	1300 MCM	2	3 1/4	6 5/8
DPC-150	1500 MCM	2	3 1/4	6 5/8
DPC-175	1750 MCM	2	3 1/2	7 1/8
DPC-200	2000 MCM	2	3 1/2	7 1/8

AFL's Dossert® product line offers a wide range of substation accessories in low voltage up to 765 kV applications in bronze or aluminum materials.

© 2011, AFL, all rights reserved. PP-3-00083, Revision 2, 11.26.205
Specifications are subject to change without notice.

Type DPR
Compression Reducing Coupler

A seamless sleeve reducing coupler for splicing two cables end to end.
Compression indents can be made with all standard compression tools.
Made of pure high conductivity copper tin coated.



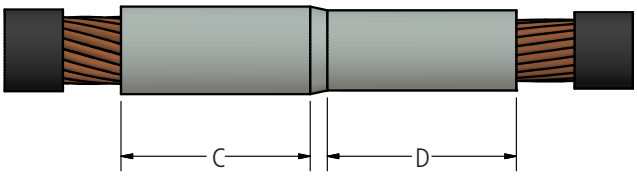

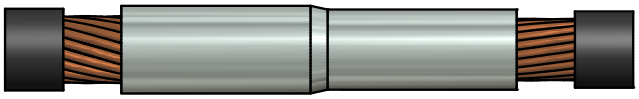

Ordering Information

Catalog Number	Cable Size D	No. of Indents per Cable	Dimensions in inches	
			C	D
DPR4-2	#4-#6	1-1	1 1/8	1 1/8
DPR6-2	#2-#6	1-1	1 1/4	1 1/8
DPR6-4	#2-#4	1-1	1 1/4	1 1/8
DPR10-2	1/0-#6	1-1	1 3/8	1 1/8
DPR10-4	1/0-#4	1-1	1 3/8	1 1/8
DPR10-6	1/0-#6	1-1	1 3/8	1 1/4
DPR13-2	2/0-#6	1-1	1 1/2	1 1/8
DPR13-4	2/0-#4	1-1	1 1/2	1 1/8
DPR13-6	2/0-#2	1-1	1 1/2	1 1/4
DPR13-10	2/0-1/0	1-1	1 1/2	1 3/8
DPR21-2	4/0-#6	1-1	1 5/8	1 1/8
DPR21-4	4/0-#4	1-1	1 5/8	1 1/8
DPR21-6	4/0-#2	1-1	1 5/8	1 1/4
DPR21-10	4/0-1/0	1-1	1 5/8	1 3/8
DPR21-13	4/0-2/0	1-1	1 5/8	1 1/2
DPR25-4	250-#4	1-1	1 5/8	1 1/8
DPR25-6	250-#2	1-1	1 5/8	1 1/4
DPR25-10	250-1/0	1-1	1 5/8	1 3/8
DPR25-13	250-2/0	1-1	1 5/8	1 1/2
DPR25-21	250-4/0	1-1	1 5/8	1 5/8
DPR35-6	350-#2	2-1	2	1 1/4
DPR35-10	350-1/0	2-1	2	1 3/8
DPR35-13	350-2/0	2-1	2	1 1/2

Catalog Number	Cable Size D	No. of Indents per Cable	Dimensions in inches	
			C	D
DPR35-21	350-4/0	2-1	2	1 5/8
DPR35-25	350-250	2-1	2	1 5/8
DPR50-10	500-1/0	2-1	2 1/4	1 3/8
DPR50-13	500-2/0	2-1	2 1/4	1 1/2
DPR50-21	500-4/0	2-1	2 1/4	1 5/8
DPR50-25	500-210	2-1	2 1/4	1 5/8
DPR50-35	500-350	2-2	2 1/4	2
DPR75-13	750-2/0	2-1	2 7/8	1 1/2
DPR75-21	750-4/0	2-1	2 7/8	1 5/8
DPR75-25	750-250	2-1	2 7/8	1 5/8
DPR75-35	750-350	2-1	2 7/8	2
DPR75-50	750-500	2-2	2 7/8	2 1/4
DPR100-21	1000-4/0	2-1	3	1 5/8
DPR100-25	1000-250	2-1	3	1 5/8
DPR100-35	1000-350	2-2	3	2
DPR100-50	1000-500	2-2	3	2 1/4
DPR100-75	1000-750	2-2	3	2 7/8
DPR150-25	1500-250	2-1	3 1/4	1 5/8
DPR150-35	1500-350	2-2	3 1/4	2
DPR150-50	1500-500	2-2	3 1/4	2 1/4
DPR150-75	1500-750	2-1	3 1/4	2 7/8
DPR150-100	1500-1000	2-2	3 1/4	3

AFL's Dossert® product line offers a wide range of substation accessories in low voltage up to 765 kV applications in bronze or aluminum materials.

© 2011, AFL, all rights reserved. PP-3-00085, Revision 2, 11.26.2025
Specifications are subject to change without notice.

Type CRT Compression Tee Coupler

A tee coupler for joining two cables o the run and taking off a right angle tap at the junction. Made of high conductivity copper and completely tin plated. The round run and tap sections make for an easy and neat taping job. Other sizes than those listed can be readily furnished upon request.

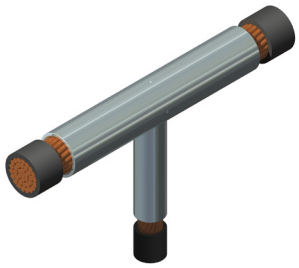

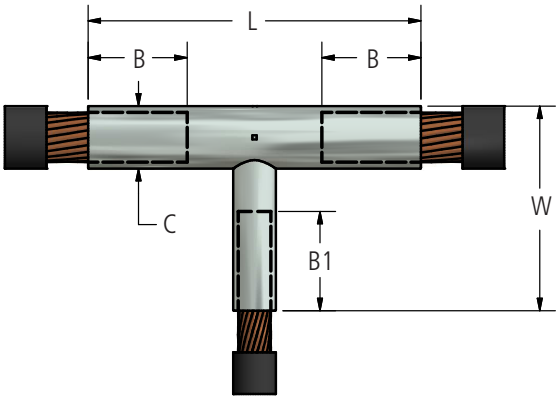

Ordering Information

Catalog Number	Cable Size		No. of Indents B/B1	Dimensions in inches				
	Run D	Tap D1		B	B1	C*	L	W
CTR10-2	1/0 STR	6 STR	1/1	1 7/16	1 1/8	17/32	3 11/16	2
CTR10-4	1/0 STR	4 STR	1/1	1 7/16	1 1/8	17/32	3 3/4	2
CTR10-6	1/0 STR	2 STR	1/1	1 7/16	1 1/4	17/32	3 13/16	2 1/8
CTR10-8	1/0 STR	1 STR	1/1	1 7/16	1 7/16	17/32	3 7/8	2 1/4
CTR10-10	1/0 STR	1/0 STR	1/1	1 7/16	1 7/16	17/32	3 7/8	2 1/4
CTR13-2	2/0 STR	6 STR	1/1	1 1/2	1 1/8	9/16	3 11/16	2
CTR13-4	2/0 STR	4 STR	1/1	1 1/2	1 1/8	9/16	3 3/4	2
CTR13-6	2/0 STR	2 STR	1/1	1 1/2	1 1/4	9/16	3 13/16	2 1/8
CTR13-8	2/0 STR	1 STR	1/1	1 1/2	1 7/16	9/16	3 7/8	2 1/4
CTR13-10	2/0 STR	1/0 STR	1/1	1 1/2	1 7/16	9/16	3 7/8	2 1/4
CTR13-13	2/0 STR	2/0 STR	1/1	1 1/2	1 1/2	9/16	3 15/16	2 5/16
CTR21-4	4/0 STR	4 STR	1/1	1 5/8	1 1/8	11/16	3 15/16	2 1/8
CTR21-6	4/0 STR	2 STR	1/1	1 5/8	1 1/4	11/16	4 1/16	2 1/4
CTR21-8	4/0 STR	1 STR	1/1	1 5/8	1 7/16	11/16	4 1/16	2 3/8
CTR21-10	4/0 STR	1/0 STR	1/1	1 5/8	1 7/16	11/16	4 1/8	2 3/8
CTR21-13	4/0 STR	2/0 STR	1/1	1 5/8	1 1/2	11/16	4 3/16	2 7/16
CTR21-21	4/0 STR	4/0 STR	1/1	1 5/8	1 5/8	11/16	4 1/4	2 1/2
CTR25-4	250 MCM	4 STR	1/1	1 5/8	1 1/8	3/4	3 7/8	2 1/4
CTR25-6	250 MCM	2 STR	1/1	1 5/8	1 1/4	3/4	4	2 3/8
CTR25-8	250 MCM	1 STR	1/1	1 5/8	1 7/16	3/4	4	2 7/16
CTR25-10	250 MCM	1/0 STR	1/1	1 5/8	1 7/16	3/4	4 1/16	2 7/16
CTR25-13	250 MCM	2/0 STR	1/1	1 5/8	1 1/2	3/4	4 1/8	2 1/2

* Diameter over run barrel.

AFL's Dossert® product line offers a wide range of substation accessories in low voltage up to 765 kV applications in bronze or aluminum materials.

© 2011, AFL, all rights reserved. PP-3-00080, Revision 1, 2.18.2022
Specifications are subject to change without notice.

Type CRT Compression Tee Coupler

Catalog Number	Cable Size		No. of Indents B/B1	Dimensions in inches				
	Run D	Tap D1		B	B1	C*	L	W
CTR25-21	250 MCM	4/0 STR	1/1	1 5/8	1 5/8	3/4	4 3/16	2 9/16
CTR25-25	250 MCM	250 MCM	1/1	1 5/8	1 5/8	3/4	4 1/4	2 9/16
CTR30-6	300 MCM	2 STR	2-1	2 1/16	1 1/4	13/16	5 3/16	2 3/8
CTR30-8	300 MCM	1 STR	2-1	2 1/16	1 7/16	13/16	5 5/16	2 7/16
CTR30-10	300 MCM	1/0 STR	2-1	2 1/16	1 7/16	13/16	5 5/16	2 7/16
CTR30-13	300 MCM	2/0 STR	2-1	2 1/16	1 1/2	13/16	5 5/16	2 1/2
CTR30-21	300 MCM	4/0 STR	2-1	2 1/16	1 5/8	13/16	5 7/16	2 9/16
CTR30-25	300 MCM	250 MCM	2-1	2 1/16	1 5/8	13/16	5 1/2	2 9/16
CTR30-30	300 MCM	300 MCM	2-2	2 1/16	2 1/16	13/16	5 9/16	3 1/8
CTR35-6	350 MCM	2 STR	2-1	2 1/16	1 1/4	7/8	5 3/16	2 7/16
CTR35-8	350 MCM	1 STR	2-1	2 1/16	1 7/16	7/8	5 5/16	2 5/8
CTR35-10	350 MCM	1/0 STR	2-1	2 1/16	1 7/16	7/8	5 5/16	2 9/16
CTR35-13	350 MCM	2/0 STR	2-1	2 1/16	1 1/2	7/8	5 5/16	2 9/16
CTR35-21	350 MCM	4/0 STR	2-1	2 1/16	1 5/8	7/8	5 7/16	2 5/8
CTR35-25	350 MCM	250 MCM	2-1	2 1/16	1 5/8	7/8	5 1/2	2 5/8
CTR35-30	350 MCM	300 MCM	2-2	2 1/16	2 1/16	7/8	5 9/16	3 1/4
CTR35-35	350 MCM	350 MCM	2-2	2 1/16	2 1/16	7/8	5 5/8	3 1/4
CTR40-10	400 MCM	1/0 STR	2-1	2 1/8	1 7/16	31/32	5 5/16	2 5/8
CTR40-13	400 MCM	2/0 STR	2-1	2 1/8	1 1/2	31/32	5 5/16	2 5/8
CTR40-21	400 MCM	4/0 STR	2-1	2 1/8	1 5/8	31/32	5 7/16	2 11/16
CTR40-25	400 MCM	250 MCM	2-1	2 1/8	1 5/8	31/32	5 1/2	2 11/16
CTR40-30	400 MCM	300 MCM	2-2	2 1/8	2 1/16	31/32	5 9/16	3 3/16
CTR40-35	400 MCM	350 MCM	2-2	2 1/8	2 1/16	31/32	5 5/8	3 3/16
CTR40-40	400 MCM	400 MCM	2-2	2 1/8	2 1/8	31/32	5 5/8	3 1/4
CTR50-10	500 MCM	1/0 STR	2-1	2 1/4	1 7/16	1 1/16	5 11/16	2 3/4
CTR50-13	500 MCM	2/0 STR	2-1	2 1/4	1 1/2	1 1/16	5 11/16	2 3/4
CTR50-21	500 MCM	4/0 STR	2-1	2 1/4	1 5/8	1 1/16	5 13/16	2 13/16
CTR50-25	500 MCM	250 MCM	2-1	2 1/4	1 5/8	1 1/16	5 7/8	2 13/16
CTR50-30	500 MCM	300 MCM	2-2	2 1/4	2 1/16	1 1/16	5 15/16	3 7/16
CTR50-35	500 MCM	350 MCM	2-2	2 1/4	2 1/16	1 1/16	6	3 7/16
CTR50-40	500 MCM	400 MCM	2-2	2 1/4	2 1/8	1 1/16	6 1/16	3 1/2
CTR50-50	500 MCM	500 MCM	2-2	2 1/4	2 1/4	1 1/16	6 3/16	3 5/8

* Diameter over run barrel.

© 2011, AFL, all rights reserved. PP-3-00080, Revision 1, 2.18.2022
Specifications are subject to change without notice.

Type DPL Compression Terminal Lug

A precision made compression terminal lug for a full range of conductor sizes with 1, 2, and 4 hole pads in the larger sizes. Made of tin coated pure copper with a minimum conductivity of 98% I.A.C.S. Conductor is secured by identifying the barrel with any standard compression tool made for electrical lugs.

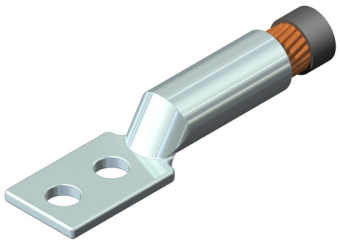

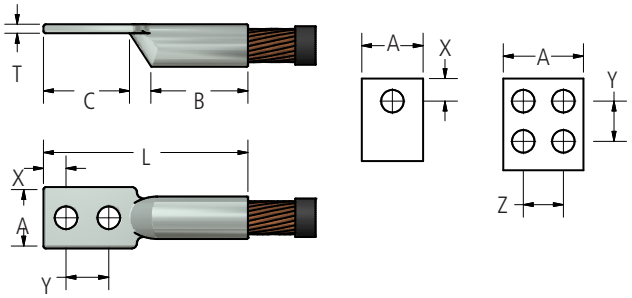

Ordering Information

Catalog Number	Cable Size D	Screw Size	No. of Holes in Pad	No. of Indents B/B1	Dimensions in inches						
					A	B	C	L	T	X	Y & Z
DPL1-1	#8 STR	#10	1	1	11/32	7/16	1/2	1 1/8	5/64	7/32	-
DPL2-1	#6 STR	1/4	1	1	11/32	1 1/8	1/2	1 13/16	3/32	1/4	-
DPL2-2	#6 STR	1/4	2	1	11/32	1 1/8	1 3/16	2 1/2	3/32	1/4	5/8
DPL4-1	#4 STR	1/4	1	1	1/2	1 1/8	1/2	1 13/16	3/32	1/4	-
DPL4-2	#4 STR	1/4	2	1	1/2	1 1/8	1 3/16	2 1/2	3/32	1/4	5/8
DPL5-1	#3 STR	5/16	1	1	17/32	1 1/4	3/4	2 1/4	3/32	3/8	-
DPL5-2	#3 STR	5/16	2	1	17/32	1 1/4	1 1/2	2 15/16	3/32	11/32	3/4
DPL6-1	#2 STR	5/16	1	1	19/32	1 1/4	3/4	2 1/4	7/64	3/8	-
DPL6-2	#2 STR	5/16	2	1	19/32	1 1/4	1 1/2	2 15/16	7/64	11/32	3/4
DPL8-1	#1 STR	5/16	1	1	11/16	1 3/8	3/4	2 3/8	7/64	3/8	-
DPL8-2	#1 STR	5/16	2	1	11/16	1 3/8	1 5/8	3 1/4	7/64	11/32	7/8
DPL10-1	1/0 STR	5/16	1	1	3/4	1 3/8	3/4	2 11/16	1/8	3/8	-
DPL10-2	1/0 STR	5/16	2	1	3/4	1 3/8	1 5/8	3 7/16	1/8	11/32	7/8
DPL13-1	2/0 STR	3/8	1	1	13/16	1 1/2	7/8	2 13/16	1/8	7/16	-
DPL13-2	2/0 STR	5/16	2	1	13/16	1 1/2	1 5/8	3 5/8	1/8	11/32	7/8
DPL17-1	3/0 STR	1/2	1	1	29/32	1 1/2	1	3	1/8	1/2	-
DPL17-2	3/0 STR	3/8	2	1	29/32	1 1/2	1 13/16	3 13/16	1/8	3/8	1
DPL21-1	4/0 STR	1/2	1	1	1	1 5/8	1	3 3/16	9/64	1/2	-
DPL21-2	4/0 STR	3/8	2	1	1	1 5/8	1 13/16	3 15/16	9/64	3/8	1
DPL25-1	250 MCM	1/2	1	1	1 3/32	1 5/8	1 1/8	3 9/16	5/32	9/16	-
DPL25-2	250 MCM	3/8	2	1	1 3/32	1 5/8	1 7/8	4 5/16	5/32	3/8	1 1/16
DPL30-1	300 MCM	1/2	1	2	1 3/16	2	1 1/8	3 9/16	5/32	9/16	-
DPL30-2	300 MCM	3/8	2	2	1 3/16	2	1 7/8	4 5/16	5/32	3/8	1 1/16
DPL35-1	350 MCM	1/2	1	2	1 9/32	2	1 1/8	3 9/16	3/16	9/16	-
DPL35-2	350 MCM	3/8	2	2	1 9/32	2	1 7/8	4 5/16	3/16	3/8	1 1/16

AFL's Dossert® product line offers a wide range of substation accessories in low voltage up to 765 kV applications in bronze or aluminum materials.

© 2011, AFL, all rights reserved. PP-3-00084, Revision 2, 11.26.2025
Specifications are subject to change without notice.

Type DPL Compression Terminal Lug

Catalog Number	Cable Size D	Screw Size	No. of Holes in Pad	No. of Indents B/B1	Dimensions in inches						
					A	B	C	L	T	X	Y & Z
DPL40-1	400 MCM	5/8	1	2	1 13/32	2 1/8	1 1/2	4 1/4	3/16	3/4	-
DPL40-2	400 MCM	3/8	2	2	1 13/32	2 1/8	2	4 3/4	3/16	7/16	1 1/16
DPL 50-1	500 MCM	5/8	1	2	1 17/32	2 1/4	1 1/2	4 3/8	1/4	3/4	-
DPL 50-2	500 MCM	3/8	2	2	1 17/32	2 1/4	2	4 7/8	1/4	7/16	1 1/16
DPL 55-1	550 MCM	5/8	1	2	1 5/8	2 5/8	1 5/8	4 15/16	1/4	13/16	-
DPL 55-2	550 MCM	3/8	2	2	1 5/8	2 5/8	2 1/16	5 3/8	1/4	7/16	1 1/8
DPL 60-1	600 MCM	5/8	1	2	1 3/4	2 11/16	1 3/4	5 1/8	9/32	7/8	-
DPL 60-2	600 MCM	3/8	2	2	1 3/4	2 11/16	2 1/16	5 7/16	9/32	7/16	1 1/8
DPL 65-1	650 MCM	5/8	1	2	1 25/32	2 13/16	1 3/4	5 5/16	9/32	7/8	-
DPL 65-2	650 MCM	3/8	2	2	1 25/32	2 13/16	2 3/16	5 3/4	9/32	1/2	1 1/8
DPL 75-1	750 MCM	5/8	1	2	1 29/32	2 7/8	1 15/16	5 5/8	9/32	7/8	-
DPL 75-2	750 MCM	3/8	2	2	1 29/32	2 7/8	2 3/16	5 7/8	9/32	1/2	1 1/8
DPL 80-1	800 MCM	5/8	1	2	1 31/32	2 15/16	1 15/16	5 11/16	5/16	15/16	-
DPL 80-2	800 MCM	3/8	2	2	1 31/32	2 15/16	2 3/16	5 15/16	5/16	1/2	1 1/8
DPL 85-1	850 MCM	5/8	1	2	2	2 15/16	1 15/16	5 11/16	5/16	15/16	-
DPL 85-2	850 MCM	3/8	2	2	2	2 15/16	2 3/16	5 15/16	5/16	1/2	1 1/8
DPL 85-2-S50	850 MCM	1/2	2	2	2	2 15/16	3	6 3/4	5/16	5/8	1 3/4
DPL 100-1	1000 MCM	5/8	1	2	2 3/16	3	2 1/8	6	11/32	15/16	-
DPL 100-2	1000 MCM	1/2	2	2	2 3/16	3	2 7/16	6 5/16	11/32	9/16	1 1/4
DPL 100-2-S50	1000 MCM	1/2	2	2	2 3/16	3	3	6 7/8	11/32	5/8	1 3/4
DPL 100-4	1000 MCM	3/8	4	2	2 3/16	3	2 3/16	6 1/16	11/32	1/2	1 1/8
DPL 125-1	1250 MCM	3/4	1	2	2 13/32	3 3/16	2 1/8	6 3/8	3/8	1 1/16	-
DPL 125-2	1250 MCM	1/2	2	2	2 13/32	3 3/16	2 5/8	6 7/8	3/8	9/16	1 3/8
DPL 125-2-S50	1250 MCM	1/2	2	2	2 13/32	3 3/16	3	7 1/4	3/8	5/8	1 3/4
DPL 125-4	1250 MCM	1/2	4	2	2 13/32	3 3/16	2 5/8	6 7/8	3/8	9/16	1 3/8
DPL 130-1	1300 MCM	3/4	1	2	2 17/32	3 3/16	2 1/8	6 1/2	13/32	1 1/16	-
DPL 130-2	1300 MCM	1/2	2	2	2 17/32	3 3/16	2 5/8	7	13/32	9/16	1 3/8
DPL 130-2-S50	1300 MCM	1/2	2	2	2 17/32	3 3/16	3	7 3/8	13/32	5/8	1 3/4
DPL 150-1	1500 MCM	3/4	1	2	2 11/16	3 3/16	2 5/8	6 11/16	13/32	1 1/8	-
DPL 150-2	1500 MCM	1/2	2	2	2 11/16	3 3/16	2 1/4	7 1/16	13/32	9/16	1 3/8
DPL 150-2-S50	1500 MCM	1/2	2	2	2 11/16	3 3/16	3	7 1/16	13/32	5/8	1 3/4
DPL 150-4	1500 MCM	1/2	4	2	2 11/16	3 3/16	2 5/8	7 1/16	13/32	9/16	1 3/8
DPL 175-1	1750 MCM	3/4	1	2	2 7/8	3 7/16	2 1/4	7 1/4	7/16	1 1/8	-
DPL 175-2	1750 MCM	1/2	2	2	2 7/8	3 7/16	2 3/4	7 3/4	7/16	9/16	1 1/2
DPL 175-2-S50	1750 MCM	1/2	2	2	2 7/8	3 7/16	3	8	7/16	5/8	1 3/4
DPL 175-4	1750 MCM	1/2	4	2	2 7/8	3 7/16	2 3/4	7 3/4	7/16	9/16	1 1/2
DPL 200-1	2000 MCM	3/4	1	2	3 3/32	3 7/16	2 3/8	7 7/16	15/32	13/16	-
DPL 200-2	2000 MCM	1/2	2	2	3 3/32	3 7/16	2 3/4	7 13/16	15/32	9/16	1 1/2
DPL 200-2-S50	2000 MCM	1/2	2	2	3 3/32	3 7/16	3	8 1/16	15/32	5/8	1 3/4
DPL 200-4	2000 MCM	1/2	4	2	3 3/32	3 7/16	2 3/4	7 13/16	15/32	9/16	1 1/2

© 2011, AFL, all rights reserved. PP-3-00084, Revision 2, 11.26.2025
Specifications are subject to change without notice.

Type BCKT Tee Connector

A tee connector composed of a clamp type run element and a compression type connector for the tap. This connector has a wide application where various taps are to be taken from a continuous run. To ensure high resistance to corrosion connector is completely tin coated. Bolts, also tin plated are made of high strength silicon bronze. Other sizes than those shown below can be readily furnished.

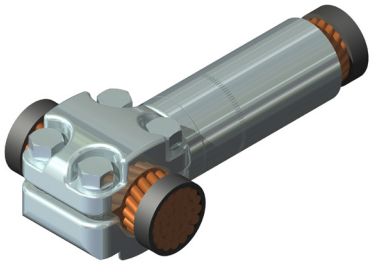

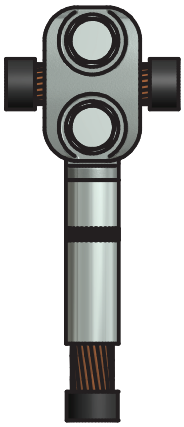

FIG. 1

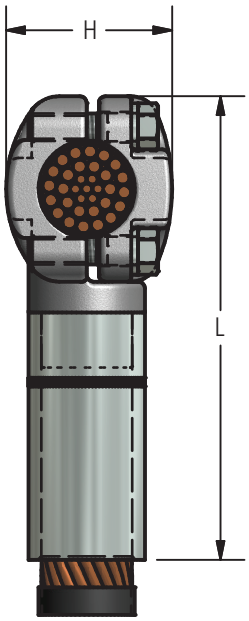

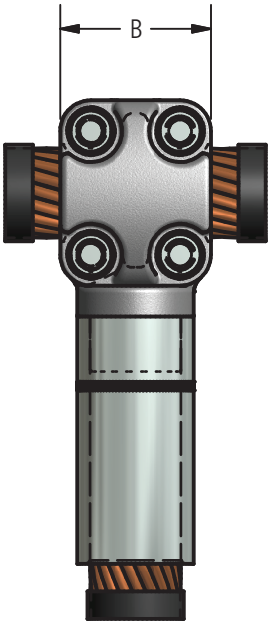

FIG. 2

Ordering Information

Catalog No.	Conductor Size		Fig. No.	Dimensions in inches			
	Run	Tap		B	H	L	Bolt Size
BCKT21-6	4/0 STR	2 STR	1	1.25	1.25	3.63	3/8
BCKT21-10	4/0 STR	1/0 STR	1	1.25	1.25	3.75	3/8
BCKT21-13	4/0 STR	2/0 STR	1	1.25	1.27	3.88	3/8
BCKT21-21	4/0 STR	4/0 STR	2	2.00	1.34	4.38	3/8
BCKT25-6	250 MCM	2 STR	1	1.38	1.44	3.75	3/8
BCKT25-10	250 MCM	1/0 STR	1	1.38	1.4375	3.875	3/8
BCKT25-13	250 MCM	2/0 STR	1	1.38	1.4375	4.00	3/8
BCKT25-21	250 MCM	4/0 STR	2	2.00	1.50	4.50	3/8
BCKT25-25	250 MCM	250 MCM	2	2.00	1.625	4.70	3/8
BCKT35-10	350 MCM	1/0 STR	1	1.38	1.50	4.00	3/8
BCKT35-13	350 MCM	2/0 STR	1	1.38	1.50	4.125	3/8
BCKT35-21	350 MCM	4/0 STR	2	2.00	1.50	4.25	3/8
BCKT35-25	350 MCM	250 MCM	2	2.00	1.75	4.88	3/8
BCKT35-35	350 MCM	350 MCM	2	2.00	1.75	5.00	3/8

AFL's Dossert® product line offers a wide range of substation accessories in low voltage up to 765 kV applications in bronze or aluminum materials.

© 2011, AFL, all rights reserved. PP-3-00071, Revision 3, 11.26.2025
Specifications are subject to change without notice.

Type BCKT Tee Connector

Ordering Information

Catalog No.	Conductor Size		Fig. No.	Dimensions in inches			
	Run	Tap		B	H	L	Bolt Size
BCKT50-13	500 MCM	2/0 STR	1	1.25	1.66	4.00	3/8
BCKT50-21	500 MCM	4/0 STR	2	2.00	1.66	4.59	3/8
BCKT50-25	500 MCM	250 MCM	2	2.00	1.75	4.50	3/8
BCKT50-35	500 MCM	350 MCM	2	2.00	1.94	5.22	3/8
BCKT50-50	500 MCM	500 MCM	2	2.00	1.94	5.19	3/8
BCKT75-10	750 MCM	1/0 STR	1	1.38	1.94	4.63	3/8
BCKT75-13	750 MCM	2/0 STR	1	1.38	1.94	4.75	3/8
BCKT75-21	750 MCM	4/0 STR	2	2.00	2.00	5.00	3/8
BCKT75-25	750 MCM	250 MCM	2	2.00	2.00	4.50	3/8
BCKT75-35	750 MCM	350 MCM	2	2.00	2.00	5.38	3/8
BCKT75-50	750 MCM	500 MCM	2	2.00	2.00	5.63	3/8
BCKT75-75	750 MCM	750 MCM	2	2.00	2.25	5.63	3/8
BCKT100-13	1000 MCM	2/0 STR	1	1.50	2.13	4.81	3/8
BCKT100-21	1000 MCM	4/0 STR	2	2.00	2.22	5.00	3/8
BCKT100-25	1000 MCM	250 MCM	2	2.00	2.19	5.25	3/8
BCKT100-35	1000 MCM	350 MCM	2	2.00	2.19	5.44	3/8
BCKT100-50	1000 MCM	500 MCM	2	2.00	2.19	5.69	3/8
BCKT100-75	1000 MCM	750 MCM	2	2.00	2.19	6.41	3/8
BCKT100-100	1000 MCM	1000 MCM	2	2.63	2.50	7.00	1/2
BCKT150-21	1500 MCM	4/0 STR	2	2.00	2.50	5.31	3/8
BCKT150-25	1500 MCM	250 MCM	2	2.00	2.50	5.81	3/8
BCKT150-35	1500 MCM	350 MCM	2	2.00	2.50	6.19	3/8
BCKT150-50	1500 MCM	500 MCM	2	2.00	2.50	6.19	3/8
BCKT150-60	1500 MCM	600 MCM	2	2.00	2.50	6.81	3/8
BCKT150-75	1500 MCM	750 MCM	2	2.00	2.50	6.69	3/8
BCKT150-100	1500 MCM	1000 MCM	2	2.75	2.69	7.25	1/2
BCKT150-150	1500 MCM	1500 MCM	2	2.75	2.69	7.97	1/2
BCKT200-25	2000 MCM	250 MCM	2	2.00	2.50	5.63	3/8
BCKT200-35	2000 MCM	350 MCM	2	2.00	2.50	6.25	3/8
BCKT200-50	2000 MCM	500 MCM	2	2.00	2.50	6.25	3/8
BCKT200-75	2000 MCM	750 MCM	2	2.75	2.50	6.88	3/8
BCKT200-100	2000 MCM	1000 MCM	2	2.75	2.69	7.44	1/2
BCKT200-150	2000 MCM	1500 MCM	2	2.75	2.69	7.75	1/2
BCKT200-200	2000 MCM	2000 MCM	2	2.75	2.69	8.13	1/2

© 2011, AFL, all rights reserved. PP-3-00071, Revision 3, 11.26.2025
Specifications are subject to change without notice.

Type HNT Hood Nut Tee Connector

A cast bronze tee connector whose tap element is provided with a cast hood which serves as a shroud over the insulation of the cable. This accomplishes a watertight weather seal on the tap cable when the body and shroud is taped to the insulation of the cable. The clamping element is a tapered sleeve and gland nut similar to type MA cable receptacles. When ordering specify kV rating and diameter over cable insulation.

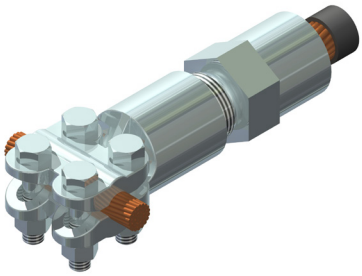

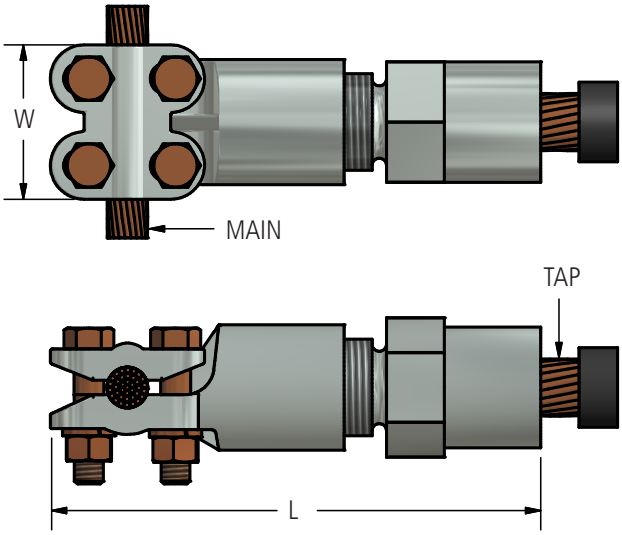

Ordering Information

Catalog Number*	Cable Size		Dimensions in inches		Bolt Size
	Main	Tap	W	L Approx.	
HNT21-6-X	4/0	#2	2	4.403	3/8
HNT21-10-X	4/0	1/0	2	4.403	3/8
HNT21-13-X	4/0	2/0	2	4.653	3/8
HNT21-21-X	4/0	4/0	2	4.653	3/8
HNT25-6-X	250	#2	2	4.450	3/8
HNT25-10-X	250	1/0	2	4.450	3/8
HNT25-13-X	250	2/0	2	4.450	3/8
HNT25-21-X	250	4/0	2	4.700	3/8
HNT25-25-X	250	250	2	4.700	3/8
HNT35-10-X	350	1/0	2	4.556	3/8
HNT35-13-X	350	2/0	2	4.556	3/8
HNT35-21-X	350	4/0	2	4.556	3/8
HNT35-25-X	350	250	2	4.806	3/8
HNT35-35-X	350	350	2	4.806	3/8
HNT50-13-X	500	2/0	2	5.289	3/8
HNT50-21-X	500	4/0	2	5.539	3/8

Catalog Number*	Cable Size		Dimensions in inches		Bolt Size
	Main	Tap	W	L Approx.	
HNT50-25-X	500	250	2	5.539	3/8
HNT50-35-X	500	350	2	5.539	3/8
HNT50-50-X	500	500	2	5.539	3/8
HNT75-13-X	750	2/0	2	5.623	3/8
HNT75-21-X	750	4/0	2	5.873	3/8
HNT75-25-X	750	250	2	5.873	3/8
HNT75-35-X	750	350	2	5.873	3/8
HNT75-50-X	750	500	2	5.873	3/8
HNT75-75-X	750	750	2	5.873	3/8
HNT100-13-X	1000	2/0	2	6.277	3/8
HNT100-21-X	1000	4/0	2	6.527	3/8
HNT100-25-X	1000	250	2	6.527	3/8
HNT100-35-X	1000	350	2	6.527	3/8
HNT100-50-X	1000	500	2	6.527	3/8
HNT100-75-X	1000	750	2	6.527	3/8
HNT100-100-X	1000	1000	2	6.902	3/8

* X in the catalog number is to be replaced with the kV rating.

AFL's Dossert® product line offers a wide range of substation accessories in low voltage up to 765 kV applications in bronze or aluminum materials.

© 2011, AFL, all rights reserved. PP-3-00093, Revision 2, 12.5.2025
Specifications are subject to change without notice.

Type STLH Hood Nut Terminal Connector

A cast bronze terminal with a cast hood serving as a shroud over the insulation of the cable. This provides a watertight weather seal on cable when the body and hood is taped to the insulation of the cable. The cable clamping element is a tapered sleeve and gland nut similar to type MA cable receptacles. When ordering specify kV rating and diameter over cable insulation.

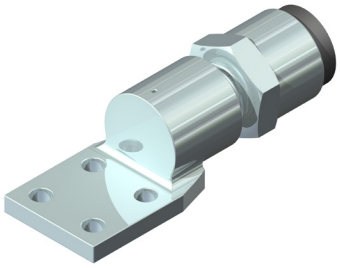

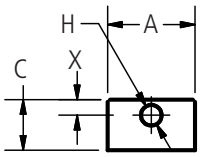

FIG. 1

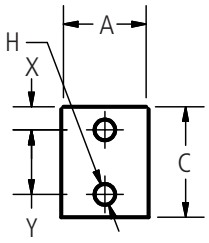

FIG. 2

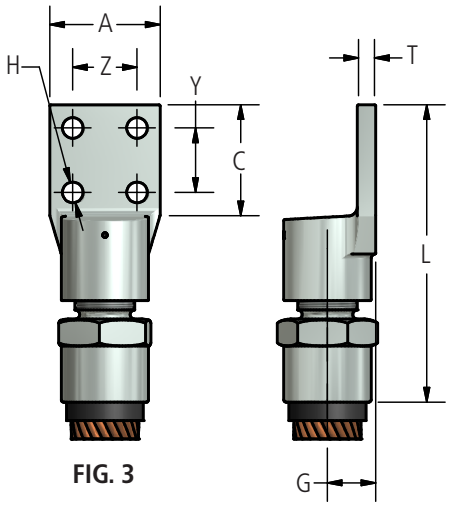

FIG. 3

Ordering Information

Catalog Number	Cable Size	Fig. No.	Dimensions in inches							
			A	C	G	L	X	Y & Z	H	T
STLH10-1	1/0	1	13/16	13/16	1/2	3 1/8	13/32	-	13/32	1/4
STLH10-2	1/0	2	13/16	1 7/8	1/2	4 3/16	7/16	1	13/32	1/4
STLH13-1	2/0	1	13/16	13/16	9/16	3 7/16	13/32	-	13/32	1/4
STLH13-2	2/0	2	13/16	1 7/8	9/16	4 1/2	7/16	1	13/32	1/4
STLH17-1	3/0	1	1	1	5/8	3 3/4	1/2	-	13/32	9/32
STLH17-2	3/0	2	1	1 7/8	5/8	4 5/8	7/16	1	13/32	9/32
STLH21-1	4/0	1	1	1	5/8	3 3/4	1/2	-	13/32	9/32
STLH21-2	4/0	2	1	1 7/8	5/8	4 5/8	7/16	1	13/32	9/32
STLH25-1	250 MCM	1	1 3/16	1 3/16	11/16	4 1/8	19/32	-	17/32	5/16
STLH25-2	250 MCM	2	1 3/16	1 7/8	11/16	5	7/16	1	13/32	5/16
STLH30-1	300 MCM	1	1 3/16	1 3/16	3/4	4 1/4	19/32	-	17/32	5/16
STLH30-2	300 MCM	2	1 3/16	1 7/8	3/4	5 1/8	7/16	1	13/32	5/16
STLH35-1	350 MCM	1	1 3/16	1 3/16	3/4	4 1/4	19/32	-	17/32	11/32
STLH35-2	350 MCM	2	1 3/16	1 7/8	3/4	5 1/8	7/16	1	13/32	11/32
STLH40-1	400 MCM	1	1 3/8	1 3/8	7/8	5	11/16	-	17/32	11/32
STLH40-2	400 MCM	2	1 7/8	1 7/8	7/8	5 1/2	7/16	1	13/32	11/32

AFL's Dossert® product line offers a wide range of substation accessories in low voltage up to 765 kV applications in bronze or aluminum materials.

© 2011, AFL, all rights reserved. PP-3-00131, Revision 2, 12.5.2025
Specifications are subject to change without notice.

Type STLH Hood Nut Terminal Connector

Ordering Information (cont.)

Catalog Number	Cable Size	Fig. No.	Dimensions in inches							
			A	C	G	L	X	Y & Z	H	T
STLH50-1	500 MCM	1	1 3/8	1 3/8	7/8	5 1/4	11/16	-	17/32	3/8
STLH50-2	500 MCM	2	1 3/8	1 7/8	7/8	5 3/4	7/16	1	13/32	3/8
STLH50-4	500 MCM	3	2	2	7/8	5 7/8	1/2	1	13/32	3/8
STLH75-2	750 MCM	2	1 3/4	2 5/8	1	6 7/8	9/16	1 1/2	9/16	7/16
STLH75-4	750 MCM	3	2	2	1	6 1/4	1/2	1	13/32	7/16
STLH80-2	800 MCM	2	1 3/4	2 5/8	1	7 1/8	9/16	1 1/2	9/16	7/16
STLH80-4	800 MCM	3	2	2	1	6 1/2	1/2	1	13/32	7/16
STLH100-2	1000 MCM	2	2	3	1 1/8	7 7/8	9/16	1 1/2	9/16	15/32
STLH100-4	1000 MCM	3	3	3	1 1/8	7 7/8	3/4	1 1/2	9/16	15/32
STLH125-2	1250 MCM	2	2 1/4	2 5/8	1 3/16	7 1/2	9/16	1 1/2	9/16	1/2
STLH125-4	1250 MCM	3	3	3	1 3/16	7 7/8	3/4	1 1/2	9/16	1/2
STLH150-2	1500 MCM	2	2 1/2	3	1 1/4	8 1/4	5/8	1 3/4	9/16	9/16
STLH150-4	1500 MCM	3	3	3	1 1/4	8 1/4	3/4	1 1/2	9/16	9/16
STLH175-2	1750 MCM	2	2 1/2	3	1 1/2	8 1/2	5/8	1 3/4	9/16	5/8
STLH175-4	1750 MCM	3	3	3	1 1/2	8 1/2	3/4	1 1/2	9/16	5/8
STLH200-2	2000 MCM	2	2 3/4	3	1 5/8	8 7/8	5/8	1 3/4	9/16	5/8
STLH200-4	2000 MCM	3	3	3	1 5/8	8 7/8	3/4	1 1/2	9/16	5/8

© 2011, AFL, all rights reserved. PP-3-00131, Revision 2, 12.5.2025
Specifications are subject to change without notice.

Alnox® UG Electrical Joint Compound



Alnox UG is recommended for use in underground applications. It is recommended for Aluminum to Aluminum and Aluminum to Copper connections where compatibility to rubber products is required. It has the same characteristics as Alnox, but with less electrical efficiency. Stored in a dry environment, Alnox UG has an infinite shelf life.

Features

- ***Low Electrical Resistance:*** Alnox UG contains extremely hard metallic particles with sharp, irregular shapes of carefully controlled grain size. This forms many metal to metal contact points for low resistance connections.
- ***Weather Resistant:*** Alnox UG adheres to pad surfaces and parallel groove clamps, protecting the connection against the environment.
- ***Wide Temperature Tolerance:*** It is workable at low temperatures , -18° C (0° F) and will not drip below 190° C (375° F).

Application

- Flat to flat connections below 190° C (375° F) such as bus to bus, dead end terminals, aluminum to aluminum and aluminum to copper.
- Parallel groove clamps.
- Underground applications.

Ordering Information

Catalog Number	Packaging
ALNOXUG10T	8.82 oz tube (250 g), carton of 10 tubes
ALNOXUG12CAN	One pound can (.45 kg), carton of 12 cans
ALNOXUG1GAL	One gallon pail, 10 Lbs (4.5 kg)
ALNOXUG5GAL	Five gallon pail, 50 Lbs (22.7 kg)

© 2011, AFL, all rights reserved. PP-3-00079, Revision 2, 12.5.2025
Specifications are subject to change without notice.

Please contact your AFL Sales Representative for information about our other products or services.

FIBER OPTIC CABLE (OPGW, ADSS, Loose Tube)

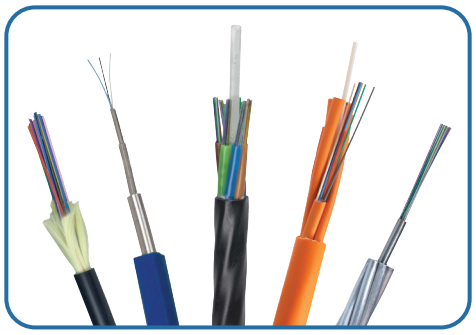

FIBER OPTIC CABLE ACCESSORIES

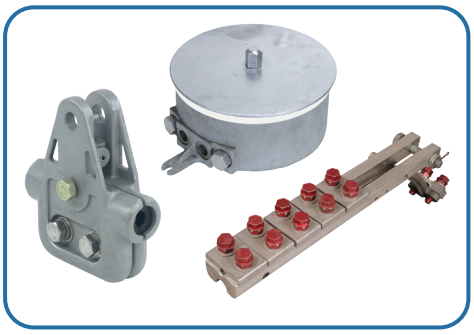

TRANSMISSION AND DISTRIBUTION



SUBSTATION AND NETWORK UNDERGROUND



AFL



AFL

www.AFLglobal.com

CAT-03003 11.11.2026