TYPE PB-AA, PBP-AA

Bus Support With Two Unit Caps

A two unit cap clamping bus support for mounting on insulator bolt circle. Type PB clamps bus directly to insulator while type PBP is provided with two independent matching bus saddles. Available for either cap or base mounting. Unless otherwise specified supports are furnished for cap mounting as illustrated.

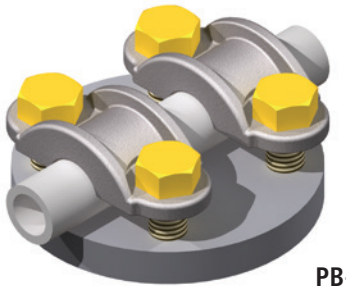

PB-AA

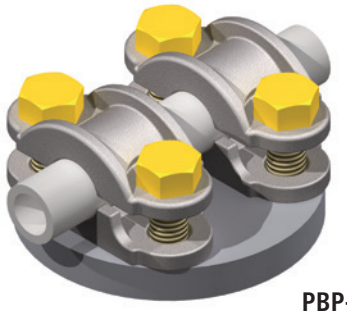

PBP-AA

Material

Aluminum Alloy

Hardware

Yellow anodized aluminum bolts, nuts, and lockwashers.

Note

For a 1" SPS pipe, 3" bolt circle, and saddle order PBP100-3-AA.

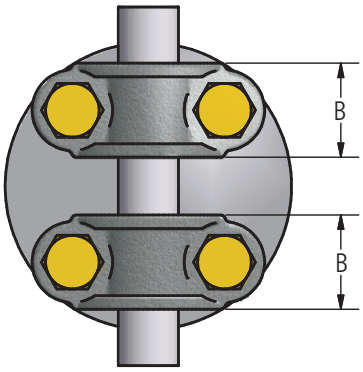

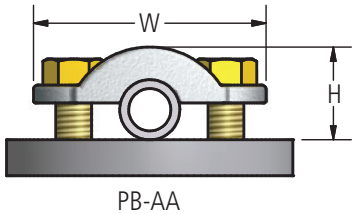

PB-AA

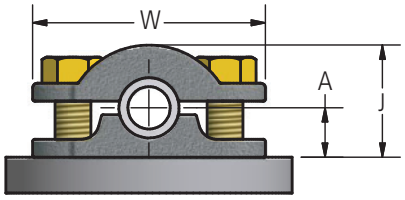

PBP-AA

Ordering Information

CATALOG NUMBER		SPS	BOLT CIRCLE	DIMENSIONS IN INCHES					BOLT SIZE
				A	B	H	J	W	
PB50-3-AA	PBP50-3-AA	1/2	3	3/4	1 5/16	1 3/8	1 11/16	3 1/4	1/2
PB50-5-AA	PBP50-5-AA	1/2	5	3/4	1 3/8	1 1/2	1 13/16	4 15/16	5/8
PB75-3-AA	PBP75-3-AA	3/4	3	7/8	1 5/16	1 9/16	1 15/16	3 1/4	1/2
PB75-5-AA	PBP75-5-AA	3/4	5	7/8	1 3/8	1 11/16	2 1/16	4 15/16	5/8
PB100-3-AA	PBP100-3-AA	1	3	1	1 1/2	1 3/4	2 1/8	3 1/4	1/2
PB100-5-AA	PBP100-5-AA	1	5	1	1 5/8	2	2 5/16	4 15/16	5/8
PB125-3-AA	PBP125-3-AA	1 1/4	3	1 1/8	1 1/2	2 1/8	2 7/16	3 1/4	1/2
PB125-5-AA	PBP125-5-AA	1 1/4	5	1 1/8	1 5/8	2 3/8	2 11/16	4 15/16	5/8
PB150-5-AA	PBP150-5-AA	1 1/2	5	1 1/4	1 3/4	2 7/16	2 3/4	4 15/16	5/8
PB200-5-AA	PBP200-5-AA	2	5	1 1/2	1 3/4	2 3/4	3 1/16	4 15/16	5/8
PB250-5-AA	PBP250-5-AA	2 1/2	5	1 3/4	1 7/8	3 5/16	3 5/8	4 15/16	5/8

AFL's Dossert® product line offers a wide range of substation accessories in low voltage up to 765 kV applications in bronze or aluminum materials.

© 2011, AFL, all rights reserved. PP-3-00390, Rev 1, 9.26.2025
Specifications are subject to change without notice.