TYPE PSU-AA
Pipe or Cable Bus Support

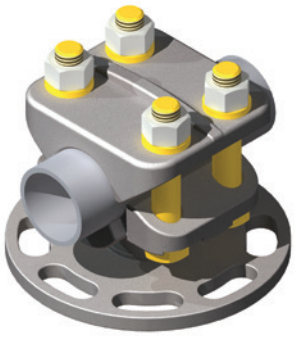

Material

Aluminum Alloy

Hardware

Aluminum nuts, bolts, and lockwashers.
Galvanized steel base mounting hardware is included.

Notes

For base mounting dimensions and hardware see page 3 in the general catalog index.

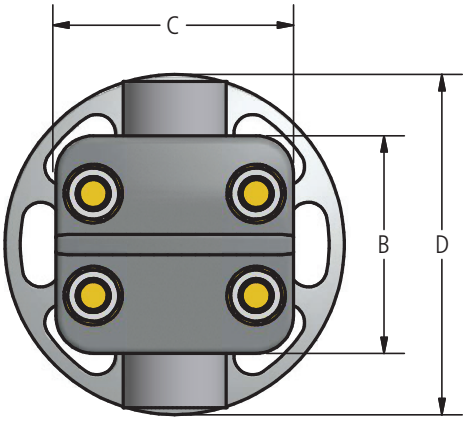

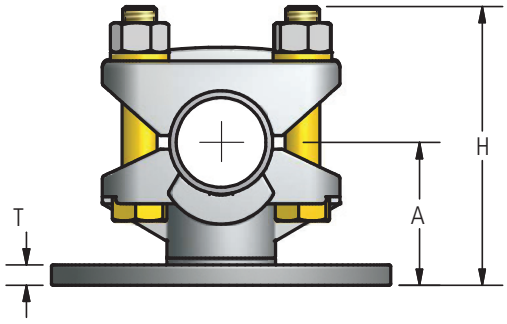

Ordering Information

CATALOG NUMBER	SPS		CABLE RANGE AAC		CABLE RANGE ACSR		BOLT CIRCLE	DIMENSIONS IN INCHES						
	MIN	MAX	MIN	MAX	MIN	MAX		A	B	C	D	H	T	BOLT SIZE
PSU50-3-AA	1/8	1/2	6STR	500MCM	6	336.4	3	2-1/8	3	3-1/8	4-1/4	3-1/2	3/8	1/2
PSU50-5-AA	1/8	1/2	6STR	500MCM	6	336.4	5	2-1/8	3	3-1/8	6-1/4	3-1/2	3/8	1/2
PSU100-3-AA	1/4	1	4/0	1250MCM	4/0	1033.5	3	2-1/4	3-1/2	3-1/2	4-1/4	4-1/4	3/8	1/2
PSU100-5-AA	1/4	1	4/0	1250MCM	4/0	1033.5	5	2-1/4	3-1/2	3-1/2	6-1/4	4-1/4	3/8	1/2
PSU150-3-AA	3/4	1-1/2	850MCM	2500MCM	715.5	2515	3	2-5/8	4	4-3/8	4-1/4	4-3/4	3/8	5/8
PSU150-5-AA	3/4	1-1/2	850MCM	2500MCM	715.5	2515	5	2-5/8	4	4-3/8	6-1/4	4-3/4	3/8	5/8
PSU150-7-AA	3/4	1-1/2	850MCM	2500MCM	715.5	2515	7	2-5/8	4	4-3/8	8-1/2	4-7/8	1/2	5/8
PSU200-3-AA	1-1/4	2	2500MCM	3500MCM	2034	2870	3	2-3/4	3	4-3/8	4-1/4	4-7/8	3/8	5/8
PSU200-5-AA	1-1/4	2	2500MCM	3500MCM	2034	2870	5	2-3/4	3	4-3/8	6-1/4	4-7/8	3/8	5/8

AFL's Dossert® product line offers a wide range of substation accessories in low voltage up to 765 kV applications in bronze or aluminum materials.

© 2011, AFL, all rights reserved. PP-3-00417, Revision 4, 9.26.2025
Specifications are subject to change without notice.