TYPE PSDC-AA

Bus Support, Pipe, Slide or Tight Fit

A bus support coupler for joining and supporting two tubular buses on a post type insulator. Designed for high resistance to impact and cantilever and torsional stresses.

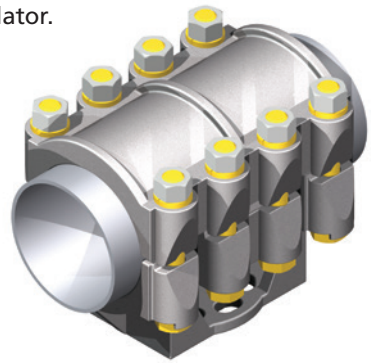

Material

Aluminum Alloy

Hardware

Yellow anodized aluminum nuts, bolts and lockwashers.
Galvanized steel mounting hardware included.

Note

For base mounting dimensions and hardware see page 3 in the general catalog index.

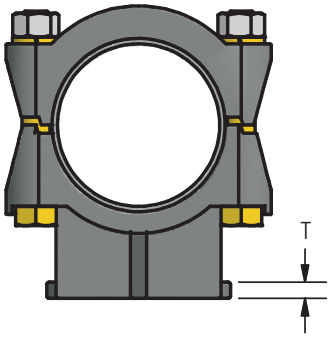

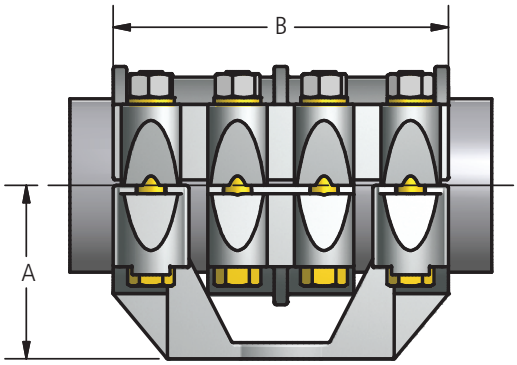

AFL's Dossert® product line offers a wide range of substation accessories in low voltage up to 765 kV applications in bronze or aluminum materials.

Ordering Information

Catalog Number	SPS	Bolt Circle	Dimensions in inches			
			A	B	T	Bolt Size
PSDC75-3-AA	3/4	3	2	6 3/4	3/8	1/2
PSDC75-5-AA	3/4	5	2 1/4	9	3/8	1/2
PSDC100-3-AA	1	3	2	7	3/8	1/2
PSDC100-5-AA	1	5	2 1/4	7 1/4	3/8	1/2
PSDC125-3-AA	1 1/4	3	2 1/4	7 1/4	3/8	1/2
PSDC125-5-AA	1 1/4	5	2 3/8	9 1/2	3/8	1/2
PSDC150-3-AA	1 1/2	3	2 1/2	7 1/4	3/8	1/2
PSDC150-5-AA	1 1/2	5	2 1/2	9 1/2	3/8	1/2
PSDC200-3-AA	2	3	2 3/4	7 1/4	3/8	1/2
PSDC200-5-AA	2	5	2 3/4	9 1/2	3/8	1/2
PSDC250-3-AA	2 1/2	3	3 1/8	7 3/4	3/8	1/2
PSDC250-5-AA	2 1/2	5	3 1/8	10	3/8	1/2
PSDC300-3-AA	3	3	3 5/8	7 3/4	3/8	5/8
PSDC300-5-AA	3	5	3 5/8	10	3/8	5/8
PSDC300-7-AA	3	7	3 5/8	12 1/4	1/2	5/8
PSDC350-3-AA	3 1/2	3	4	7 3/4	3/8	5/8
PSDC350-5-AA	3 1/2	5	4	10	3/8	5/8
PSDC350-7-AA	3 1/2	7	4	12 1/4	1/2	5/8
PSDC400-3-AA	4	3	4 1/2	7 3/4	1/2	5/8
PSDC400-5-AA	4	5	4 1/2	10	3/8	5/8
PSDC400-7-AA	4	7	4 1/2	12 1/4	1/2	5/8
PSDC500-3-AA	5	3	5	8 1/4	1/2	5/8
PSDC500-5-AA	5	5	5	10 1/2	1/2	5/8
PSDC500-7-AA	5	7	5	12 3/4	5/8	5/8
PSDC600-3-AA	6	3	5 1/2	7 3/4	1/2	5/8
PSDC600-5-AA	6	5	5 1/2	10	1/2	5/8
PSDC600-7-AA	6	7	5 1/2	12 3/4	5/8	5/8

© 2011, AFL, all rights reserved. PP-3-00406, Rev 2, 5.11.2026
Specifications are subject to change without notice.