DOSSERT®

TYPE HPS-AA, HPS-CH-AA

HPS is a horizontal support for a rigid fit and the HPS-CH is a for a horizontal support for a slip fit.

Material

Aluminum Alloy

Hardware

Galvanized steel hardware supplied for base mounting.

Notes

- For Slip Bus Support, add suffix "-CH" to catalog number. Ex: HPS100-3B-CH-AA.
- For base mounting dimensions and hardware, see page 3 in the general catalog index of AFL's Substation catalog.

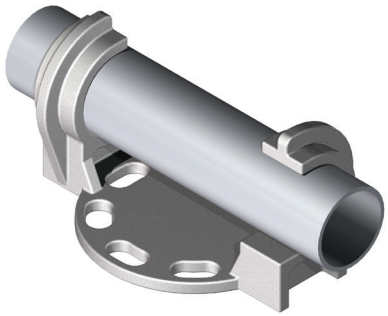

HPS-AA

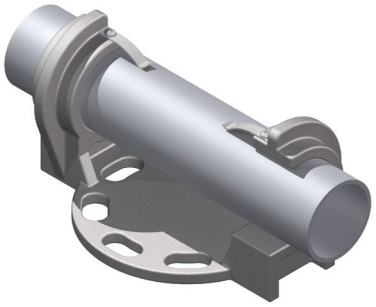

HPS-CH-AA

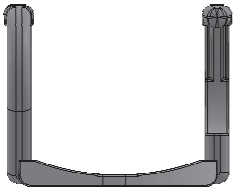

HPS-AA

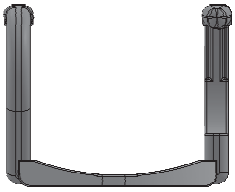

HPS-CH-AA

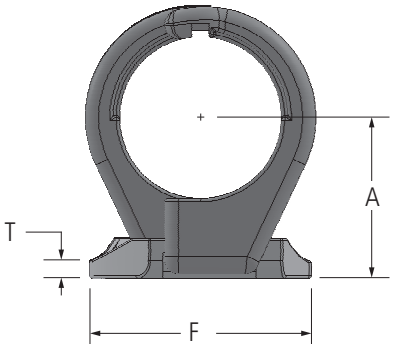

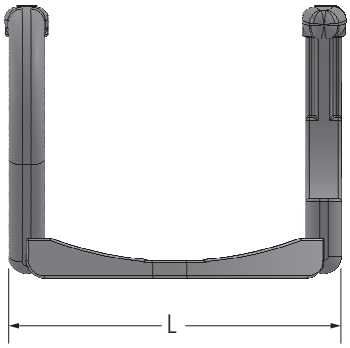

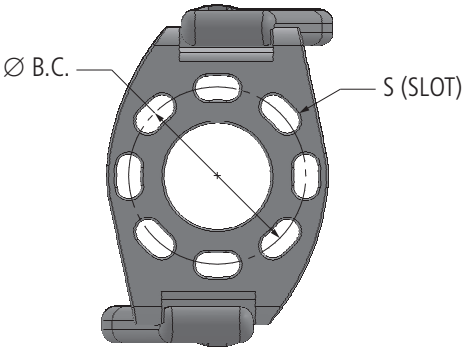

continued

© 2010, AFL, all rights reserved. PP-3-00374, Revision 2, 10.18.2022
Specifications are subject to change without notice.

DOSSERT®

TYPE HPS-AA, HPS-CH-AA

Ordering Information

CATALOG NUMBER		SPS	DIMENSIONS IN INCHES					
STANDARD	WITH CHATTER SPRING		A	B.C.	F	L	S	T
HPS100-3-AA	HPS100-3-CH-AA	1	2	3	4 1/4	5 3/4	9/16	3/8
HPS100-5-AA	HPS100-5-CH-AA	1	2	5	6 1/4	8	11/16	3/8
HPS125-3-AA	HPS125-3-CH-AA	1 1/4	2 1/4	3	4 1/4	5 3/4	9/16	3/8
HPS125-5-AA	HPS125-5-CH-AA	1 1/4	2 3/8	5	6 1/4	8	11/16	3/8
HPS150-3-AA	HPS150-3-CH-AA	1 1/2	2 1/2	3	4 1/4	5 3/4	9/16	3/8
HPS150-5-AA	HPS150-5-CH-AA	1 1/2	2 1/2	5	6 1/4	8 1/2	11/16	3/8
HPS200-3-AA	HPS200-3-CH-AA	2	2 3/4	3	4 1/4	6 1/4	9/16	3/8
HPS200-5-AA	HPS200-5-CH-AA	2	2 3/4	5	6 1/4	8 1/2	11/16	3/8
HPS250-3-AA	HPS250-3-CH-AA	2 1/2	3 1/8	3	4 1/4	6 5/8	9/16	3/8
HPS250-5-AA	HPS250-5-CH-AA	2 1/2	3 1/8	5	6 1/4	8 7/8	11/16	3/8
HPS300-3-AA	HPS300-3-CH-AA	3	3 5/8	3	4 1/4	6 5/8	9/16	3/8
HPS300-5-AA	HPS300-5-CH-AA	3	3 5/8	5	6 1/4	8 7/8	11/16	3/8
HPS350-3-AA	HPS350-3-CH-AA	3 1/2	4	3	4 1/4	7 1/4	9/16	7/16
HPS350-5-AA	HPS350-5-CH-AA	3 1/2	4	5	6 1/4	9 1/2	11/16	7/16
HPS400-3-AA	HPS400-3-CH-AA	4	4 1/2	3	4 1/4	7 5/8	9/16	1/2
HPS400-5-AA	HPS400-5-CH-AA	4	4 1/2	5	6 1/4	9 3/8	11/16	1/2
HPS400-7-AA	HPS400-7-CH-AA	4	4 1/2	7	8 1/2	11 7/8	13/16	1/2
HPS500-3-AA	HPS500-3-CH-AA	5	5	3	4 1/4	8 1/4	9/16	1/2
HPS500-5-AA	HPS500-5-CH-AA	5	5	5	6 1/4	10	11/16	1/2
HPS500-7-AA	HPS500-7-CH-AA	5	5	7	8 1/2	11 7/8	13/16	1/2
*HPS600-3-AA	HPS600-3-CH-AA	6	5 1/2	3	4 1/4	8 1/8	9/16	1/2
HPS600-5-AA	HPS600-5-CH-AA	6	5 1/2	5	6 1/4	10	11/16	1/2
HPS600-7-AA	HPS600-7-CH-AA	6	5 1/2	7	8 1/2	12 1/4	13/16	1/2
*HPS800-3-AA	HPS800-3-CH-AA	8	6 1/2	3	4 1/4	9 3/4	9/16	1/2
*HPS800-5-AA	HPS800-5-CH-AA	8	6 1/2	5	6 1/4	11	11/16	1/2
HPS800-7-AA	HPS800-7-CH-AA	8	6 7/8	7	8 1/2	12 1/4	13/16	1/2

* Denotes this size will not install rotated 90 degrees from bus pipe.

© 2010, AFL, all rights reserved. PP-3-00374, Revision 2, 10.18.2022
Specifications are subject to change without notice.

TYPE PLHS-AA, PLHS-CH-AA

Slip or Fixed Bus Support



PLHS-AA

Can be used as a slip or fixed bus support or fixed support by being welded into position.

Material

Aluminum Alloy

Hardware

Galvanized steel hardware supplied for base mounting.

Notes

1. For base mounting dimensions and hardware see page 3 in the general catalog index.

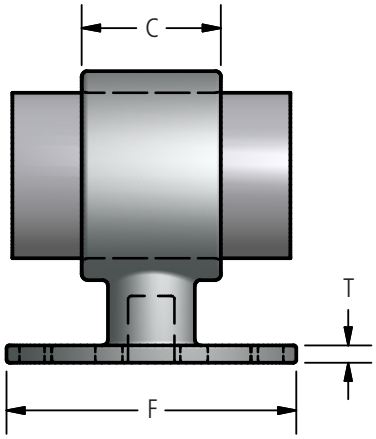

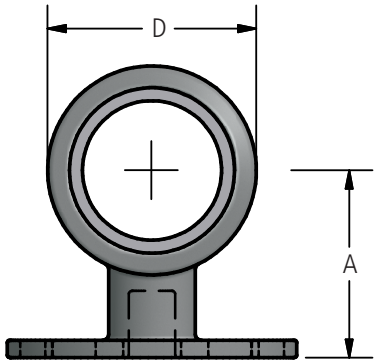

Ordering Information

Catalog Number		SPS	Bolt Circle	Dimensions in Inches				
Standard	With Chatter Spring			A	C	D	T	F
PLHS75-3-AA	PLHS75-3-CH-AA	3/4	3	2	1-1/4	1-9/16	3/8	4-1/4
PLHS75-5-AA	PLHS75-5-CH-AA	3/4	5	2-1/4	1-1/4	1-9/16	3/8	6-1/4
PLHS100-3-AA	PLHS100-3-CH-AA	1	3	2	1-1/4	1-7/8	3/8	4-1/4
PLHS100-5-AA	PLHS100-5-CH-AA	1	5	2-1/4	1-1/4	1-7/8	3/8	6-1/4
PLHS125-3-AA	PLHS125-3-CH-AA	1-1/4	3	2-1/4	1-1/2	2-1/4	3/8	4-1/4
PLHS125-5-AA	PLHS125-5-CH-AA	1-1/4	5	2-3/8	1-1/2	2-1/4	3/8	6-1/4
PLHS150-3-AA	PLHS150-3-CH-AA	1-1/2	3	2-1/2	1-1/2	2-5/8	3/8	4-1/4
PLHS150-5-AA	PLHS150-5-CH-AA	1-1/2	5	2-1/2	1-1/2	2-5/8	3/8	6-1/4
PLHS200-3-AA	PLHS200-3-CH-AA	2	3	2-3/4	2	3-1/4	3/8	4-1/4
PLHS200-5-AA	PLHS200-5-CH-AA	2	5	2-3/4	2	3-1/4	3/8	6-1/4
PLHS250-3-AA	PLHS250-3-CH-AA	2-1/2	3	3-1/8	2	3-11/16	3/8	4-1/4
PLHS250-5-AA	PLHS250-5-CH-AA	2-1/2	5	3-1/8	2	3-11/16	3/8	6-1/4
PLHS300-3-AA	PLHS300-3-CH-AA	3	3	3-5/8	2-1/2	4-1/2	3/8	4-1/4
PLHS300-5-AA	PLHS300-5-CH-AA	3	5	3-5/8	3	4-1/2	7/16	6-1/4
PLHS350-3-AA	PLHS350-3-CH-AA	3-1/2	3	4	3	5	7/16	4-1/4
PLHS350-5-AA	PLHS350-5-CH-AA	3-1/2	5	4	3	5	7/16	6-1/4
PLHS400-3-AA	PLHS400-3-CH-AA	4	3	4-1/2	3	5-9/16	3/8	4-1/4
PLHS400-5-AA	PLHS400-5-CH-AA	4	5	4-1/2	3	5-1/2	7/16	6-1/4
PLHS450-3-AA	PLHS450-3-CH-AA	4-1/2	3	4-3/4	3	6	7/16	4-1/4
PLHS450-5-AA	PLHS450-5-CH-AA	4-1/2	5	4-3/4	3	6	7/16	6-1/4
PLHS500-3-AA	PLHS500-3-CH-AA	5	3	5	3	6-9/16	7/16	4-1/4
PLHS500-5-AA	PLHS500-5-CH-AA	5	5	5	3	6-9/16	7/16	6-1/4
PLHS600-3-AA	PLHS600-3-CH-AA	6	3	5-1/2	4	7-5/8	7/16	4-1/4
PLHS600-5-AA	PLHS600-5-CH-AA	6	5	5-1/2	4	7-5/8	7/16	6-1/4

AFL's Dossert® product line offers a wide range of substation accessories in low voltage up to 765 kV applications in bronze or aluminum materials.

© 2010, AFL, all rights reserved. PP-3-00401, Revision 4, 1.9.2025
Specifications are subject to change without notice.

230 kV Aluminum Welded Bus Supports

DOSSERT®

TYPE PLHSO-AA

Bus Support for Pipes, Slip or Fixed



Material

Aluminum Alloy

Hardware

Galvanized steel hardware supplied for base mounting.

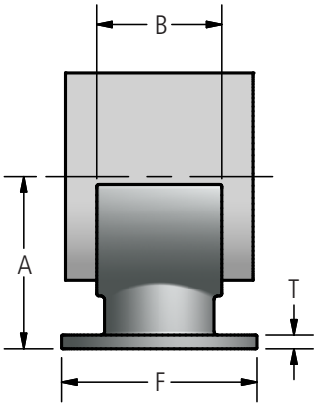

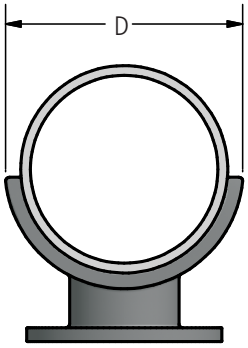

Ordering Information

CATALOG NUMBER	SPS	BOLT CIRCLE	DIMENSIONS IN INCHES				
			A	B	D	F	T
PLHSO75-3-AA	3/4	3	2	1-1/4	1-9/16	4-1/4	3/8
PLHSO75-5-AA	3/4	5	2-1/4	1-1/4	1-9/16	6-1/4	3/8
PLHSO100-3-AA	1	3	2	1-1/4	1-7/8	4-1/4	3/8
PLHSO100-5-AA	1	5	2-1/4	1-1/4	1-7/8	6-1/4	3/8
PLHSO125-3-AA	1-1/4	3	2-1/4	1-1/2	2-1/4	4-1/4	3/8
PLHSO125-5-AA	1-1/4	5	2-3/8	1-1/2	2-1/4	6-1/4	3/8
PLHSO150-3-AA	1-1/2	3	2-1/2	1-1/2	2-5/8	4-1/4	3/8
PLHSO150-5-AA	1-1/2	5	2-1/2	1-1/2	2-5/8	6-1/4	3/8
PLHSO200-3-AA	2	3	2-3/4	2	3-1/4	4-1/4	3/8
PLHSO200-5-AA	2	5	2-3/4	2	3-1/4	6-1/4	3/8
PLHSO250-3-AA	2-1/2	3	3-1/8	2	3-11/16	4-1/4	3/8
PLHSO250-5-AA	2-1/2	5	3-1/8	2	3-11/16	6-1/4	3/8
PLHSO300-3-AA	3	3	3-5/8	3	4-1/2	4-1/4	7/16
PLHSO300-5-AA	3	5	3-5/8	3	4-1/2	6-1/4	7/16
PLHSO350-3-AA	3-1/2	3	4	3	5	4-1/4	7/16
PLHSO350-5-AA	3-1/2	5	4	3	5	6-1/4	7/16
PLHSO400-3-AA	4	3	4-1/2	3	5-1/2	4-1/4	7/16
PLHSO400-5-AA	4	5	4-1/2	3	5-1/2	6-1/4	1/2
PLHSO450-3-AA	4-1/2	3	4-3/4	3	6	4-1/4	7/16
PLHSO450-5-AA	4-1/2	5	4-3/4	3	6	6-1/4	7/16
PLHSO500-3-AA	5	3	5	3	6-9/16	4-1/4	7/16
PLHSO500-5-AA	5	5	5	3	6-9/16	6-1/4	7/16
PLHSO600-3-AA	6	3	5-1/2	4	7-5/8	4-1/4	7/16
PLHSO600-5-AA	6	5	5-1/2	4	7-5/8	6-1/4	7/16
PLHSO800-5-AA	8	5	6-15/16	4	9-5/8	6-1/4	7/16
PLHSO800-7-AA	8	7	6-15/16	4	9-5/8	8-1/2	7/16

© 2010, AFL, all rights reserved. PP-3-00030, Revision, 1, 10.17.2022
Specifications are subject to change without notice.

DOSSERT®

TYPE WPS-AA

Aluminum Bus Support

Horizontal type support for pipe or tube to insulator. Slip or rigid fit applications.

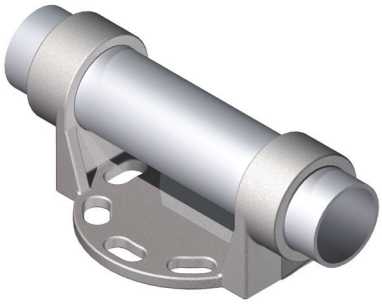

Material

Aluminum Alloy

Hardware

Galvanized steel mounting hardware.

Notes

1. For base mounting dimensions and hardware see page 3 in the general catalog index.

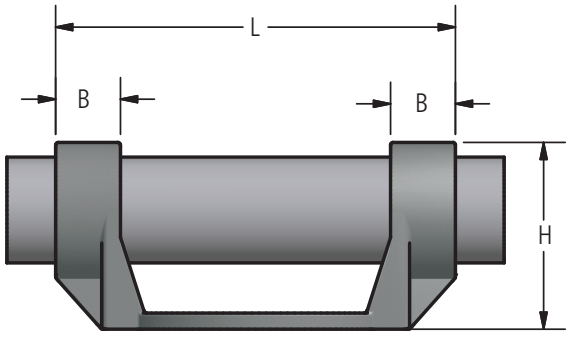

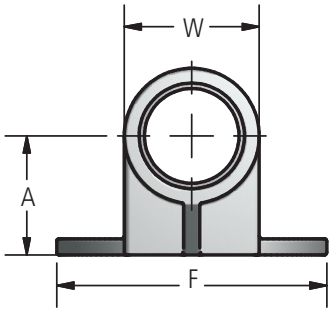

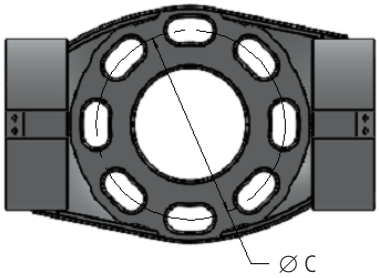

DETAIL A

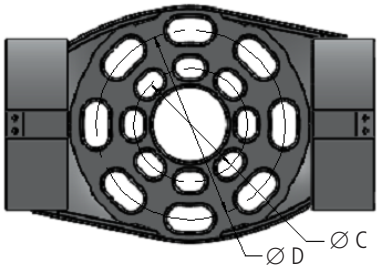

DETAIL B

continued

© 2010, AFL, all rights reserved. PP-3-00537, Revision 1, 10.17.2022
Specifications are subject to change without notice.

DOSSERT®

TYPE WPS-AA

Aluminum Welded Bus Support

Ordering Information

CATALOG NUMBER		SPS	BOLT CIRCLE	DIMENSIONS IN INCHES							
STANDARD	WITH CHATTER SPRING			A	B	C	D	F	H	L	W
WPS100-3-AA	WPS100-3-CH-AA	1	A	2	1	3	-	4 1/4	2 31/32	6 1/4	1 29/32
WPS100-5-AA	WPS100-5-CH-AA	1	A	2 1/4	1	5	-	6 1/4	3 7/32	7 27/32	1 29/32
WPS125-3-AA	WPS125-3-CH-AA	1 1/4	A	2 1/4	1	3	-	4 1/4	3 3/8	6 1/4	2 9/32
WPS125-5-AA	WPS125-5-CH-AA	1 1/4	A	2 3/8	1	5	-	6 1/4	3 17/32	8 1/8	2 9/32
WPS150-3-AA	WPS150-3-CH-AA	1 1/2	A	2 1/2	1 1/4	3	-	4 1/4	3 3/4	6 3/4	2 9/32
WPS150-5-AA	WPS150-5-CH-AA	1 1/2	A	2 1/2	1 1/4	5	-	6 1/4	3 3/4	8 3/4	2 9/32
WPS200-3-AA	WPS200-3-CH-AA	2	A	2 3/4	1 1/2	3	-	4 1/4	4 1/4	7 1/4	3 5/32
WPS200-5-AA	WPS200-5-CH-AA	2	A	2 3/4	1 1/2	5	-	6 1/4	4 1/4	9 1/8	3 5/32
WPS250-3-AA	WPS250-3-CH-AA	2 1/2	A	3 1/8	1 1/2	3	-	4 1/4	5	7 1/4	3 13/16
WPS250-5-AA	WPS250-5-CH-AA	2 1/2	A	3 1/8	1 1/2	5	-	6 1/4	5	9 3/16	3 13/16
WPS250-7-AA	WPS250-7-CH-AA	2 1/2	A	3 1/8	1 1/2	7	-	8 1/2	5	12	3 13/16
WPS300-3-AA	WPS300-3-CH-AA	3	A	3 5/8	1 3/4	3	-	4 1/4	5 25/32	7 3/4	4 5/16
WPS300-3/5-AA	WPS300-3/5-CH-AA	3	B	3 5/8	1 3/4	3	5	6 1/4	5 25/32	9 3/4	4 5/16
WPS300-5-AA	WPS300-5-CH-AA	3	A	3 5/8	1 3/4	5	-	6 1/4	5 25/32	9 3/4	4 5/16
WPS300-5/7-AA	WPS300-5/7-CH-AA	3	B	3 5/8	1 3/4	5	7	8 1/2	5 25/32	12 1/4	4 5/16
WPS300-7-AA	WPS300-7-CH-AA	3	A	3 5/8	1 3/4	7	-	8 1/2	5 25/32	12 1/4	4 5/16
WPS350-3-AA	WPS350-3-CH-AA	3 1/2	A	4	1 3/4	3	-	4 1/4	6 1/2	7 3/4	5
WPS350-3/5-AA	WPS350-3/5-CH-AA	3 1/2	B	4	1 3/4	3	5	6 1/4	6 1/2	9 3/4	5
WPS350-5-AA	WPS350-5-CH-AA	3 1/2	A	4	1 3/4	5	-	6 1/4	6 1/2	9 3/4	5
WPS350-5/7-AA	WPS350-5/7-CH-AA	3 1/2	B	4	1 3/4	5	7	8 1/2	6 1/2	12 1/8	5
WPS350-7-AA	WPS350-7-CH-AA	3 1/2	A	4	1 3/4	7	-	8 1/2	6 1/2	12 1/8	5
WPS400-3-AA	WPS400-3-CH-AA	4	A	4 1/2	2	3	-	4 1/4	7 1/4	8 1/8	5 15/32
WPS400-3/5-AA	WPS400-3/5-CH-AA	4	B	4 1/2	2	3	5	6 1/4	7 1/4	10 1/4	5 15/32
WPS400-5-AA	WPS400-5-CH-AA	4	A	4 1/2	2	5	-	6 1/4	7 1/4	10 1/4	5 15/32
WPS400-5/7-AA	WPS400-5/7-CH-AA	4	B	4 1/2	2	5	7	8 1/2	7 1/4	12 1/2	5 15/32
WPS400-7-AA	WPS400-7-CH-AA	4	A	4 1/2	2	7	-	8 1/2	7 1/4	12 1/2	5 15/32
WPS450-3-AA	WPS450-3-CH-AA	4 1/2	A	4 3/4	2	3	-	4 1/4	7 1/4	8 1/4	5 31/32
WPS450-3/5-AA	WPS450-3/5-CH-AA	4 1/2	B	4 3/4	2	3	5	6 1/4	7 1/4	10 1/4	5 31/32
WPS450-5-AA	WPS450-5-CH-AA	4 1/2	A	4 3/4	2	5	-	6 1/4	7 1/4	10 1/4	5 31/32
WPS450-5/7-AA	WPS450-5/7-CH-AA	4 1/2	B	4 3/4	2	5	7	8 1/2	7 1/4	12 1/2	5 15/32
WPS450-7-AA	WPS450-7-CH-AA	4 1/2	A	4 3/4	2	7	-	8 1/2	7 1/4	12 1/2	5 15/32
WPS500-3-AA	WPS500-3-CH-AA	5	A	5	2 1/4	3	-	4 1/4	8 9/16	8 7/8	6 5/8
WPS500-3/5-AA	WPS500-3/5-CH-AA	5	B	5	2 1/4	3	5	6 1/4	8 9/16	10 7/8	6 5/8
WPS500-5-AA	WPS500-5-CH-AA	5	A	5	2 1/4	5	-	6 1/4	8 9/16	10 7/8	6 5/8
WPS500-5/7-AA	WPS500-5/7-CH-AA	5	B	5	2 1/4	5	7	8 1/2	8 9/16	13 1/8	6 5/8
WPS500-7-AA	WPS500-7-CH-AA	5	A	5	2 1/4	7	-	8 1/2	8 9/16	13 1/8	6 5/8
WPS600-3-AA	WPS600-3-CH-AA	6	A	5 1/2	2 1/4	3	-	4 1/4	9 23/32	8 7/8	7 7/8
WPS600-3/5-AA	WPS600-3/5-CH-AA	6	B	5 1/2	2 1/4	3	5	6 1/4	9 23/32	10 7/8	7 7/8
WPS600-5-AA	WPS600-5-CH-AA	6	A	5 1/2	2 1/4	5	-	6 1/4	9 23/32	10 7/8	7 7/8
WPS600-5/7-AA	WPS600-5/7-CH-AA	6	B	5 1/2	2 1/4	5	7	8 1/2	9 23/32	13 1/8	7 7/8
WPS600-7-AA	WPS600-7-CH-AA	6	A	5 1/2	2 1/4	7	-	8 1/2	9 23/32	13 1/8	7 7/8
WPS800-5-AA	WPS800-5-CH-AA	8	A	6 15/16	2	5	-	8 1/2	11 3/4	13 7/8	9 3/4
WPS800-7-AA	WPS800-7-CH-AA	8	A	6 15/16	2	7	-	8 1/2	11 3/4	13 7/8	9 3/4

© 2010, AFL, all rights reserved. PP-3-00537, Revision 1, 10.17.2022
Specifications are subject to change without notice.

DOSSERT®

TYPE WPSO-AA
Aluminum Welded Bus Support

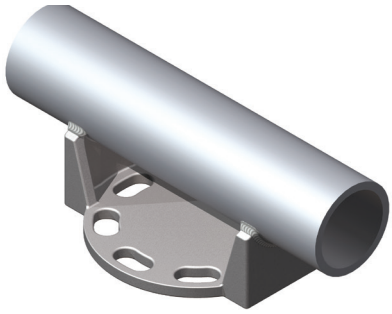

Open saddle horizontal type support for pipe to insulator. Rigid applications only. Pipe lays into support and is welded in the field.

Material

Aluminum Alloy

Hardware

Galvanized steel base mounting hardware.

Note

1. For base mounting dimensions and hardware, see page 3 in the general catalog index.

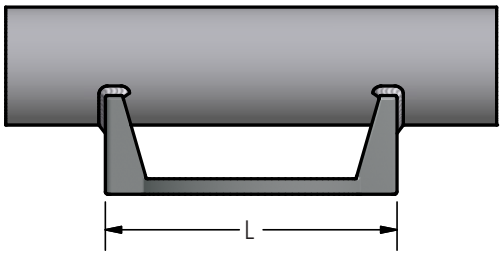

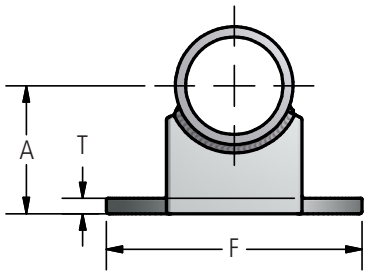

Ordering Information

CATALOG NUMBER	SPS	BOLT CIRCLE	DIMENSIONS IN INCHES			
			A	F	L	T
WPSO75-3-AA	3/4	3	2	4 1/4	4 3/4	3/8
WPSO75-5-AA	3/4	5	2 1/4	6 1/4	6 7/8	3/8
WPSO100-3-AA	1	3	2	4 1/4	4 3/4	3/8
WPSO100-5-AA	1	5	2 1/4	6 1/4	6 7/8	3/8
WPSO125-3-AA	1 1/4	3	2 1/4	4 1/4	5 1/4	3/8
WPSO125-5-AA	1 1/4	5	2 3/8	6 1/4	7	3/8
WPSO150-3-AA	1 1/2	3	2 1/2	4 1/4	4 7/8	3/8
WPSO150-5-AA	1 1/2	5	2 1/2	6 1/4	7	3/8
WPSO200-3-AA	2	3	2 3/4	4 1/4	5	3/8
WPSO200-5-AA	2	5	2 3/4	6 1/4	7 1/8	3/8
WPSO250-3-AA	2 1/2	3	3 1/8	4 1/4	5	3/8
WPSO250-5-AA	2 1/2	5	3 1/8	6 1/4	7 1/8	3/8
WPSO300-3-AA	3	3	3 5/8	4 1/4	5 1/8	3/8
WPSO300-5-AA	3	5	3 5/8	6 1/4	7 1/4	3/8
WPSO350-3-AA	3 1/2	3	4	4 1/4	5 3/8	1/2
WPSO350-5-AA	3 1/2	5	4	6 1/4	7 1/4	1/2
WPSO400-3-AA	4	3	4 1/2	4 1/4	5 1/8	1/2
WPSO400-5-AA	4	5	4 1/2	6 1/4	7 1/4	1/2
WPSO500-3-AA	5	3	5	4 1/4	5 3/8	1/2
WPSO500-5-AA	5	5	5	6 1/4	7 1/2	1/2
WPSO600-3-AA	6	3	5 1/2	4 1/4	5 3/8	1/2
WPSO600-5-AA	6	5	5 1/2	6 1/4	7 1/2	1/2
WPSO400-7-AA	4	7	4 1/4	8 5/8	9 5/8	1/2
WPSO500-7-AA	5	7	5	8 5/8	9 5/8	1/2
WPSO600-7-AA	6	7	5 1/2	8 5/8	9 5/8	1/2
WPSO800-5-AA	8	5	6 15/16	6 1/4	9 5/8	1/2
WPSO800-7-AA	8	7	6 15/16	8 5/8	9 5/8	1/2

© 2010, AFL, all rights reserved. PP-3-00538, Revision 3, 10.17.2022
Specifications are subject to change without notice.

230 kV Aluminum Welded Bus Supports

DOSSERT®

TYPE WPSSL-AA

Welded Slide Bus Support

Pipe or bus tube is welded to support. The support is then bolted directly into the insulator. Bolt sleeves allow the whole support to slide on the insulator. Bolt sleeves for rigid fix support can be ordered.

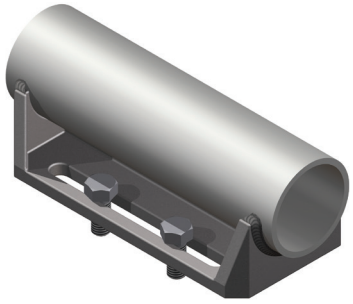

Material

Aluminum Alloy

Hardware

Galvanized steel hardware for base mounting.

Notes

Add "R" to catalog number for rigid fit; EX: WPSSL300-5-R-AA
Add "SR"for slip and rigid fit; EX: WPSSL30-5-R-AA

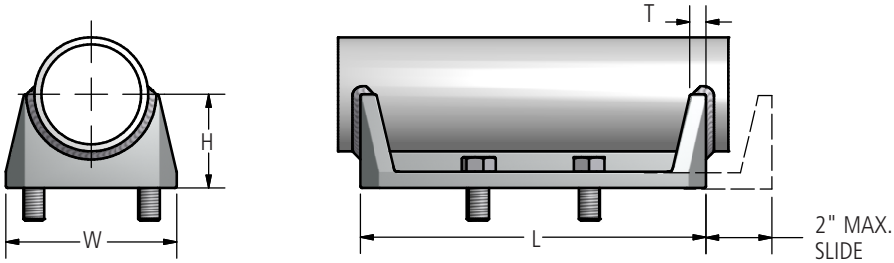

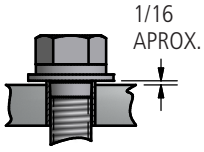

SLIDE BUS SUPPORT ASSEMBLY 1

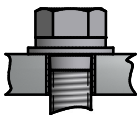

FIXED BUS SUPPORT ASSEMBLY 2

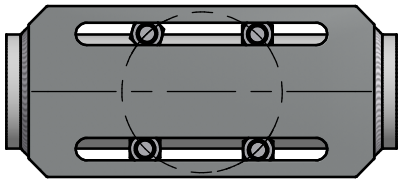

Ordering Information

CATALOG NUMBER		SPS	BOLT CIRCLE	DIMENSIONS IN INCHES				
SLIP FIT	RIGID FIT			H	L	T	W	BOLT SIZE
WPSSL100-3-AA	WPSSL100-3-R-AA	1	3	2	8-1/2	1/2	3-1/4	1/2
WPSSL100-5-AA	WPSSL100-5-R-AA	1	5	2-1/4	10-1/2	1/2	5-3/8	5/8
WPSSL125-3-AA	WPSSL125-3-R-AA	1-1/4	3	2-1/4	8-1/2	1/2	3-1/4	1/2
WPSSL125-5-AA	WPSSL125-5-R-AA	1-1/4	5	2-3/8	10-1/2	1/2	5-3/8	5/8
WPSSL150-3-AA	WPSSL150-3-R-AA	1-1/2	3	2-1/2	8-1/2	1/2	3-1/4	1/2
WPSSL150-5-AA	WPSSL150-5-R-AA	1-1/2	5	2-1/2	10-1/2	1/2	5-3/8	5/8
WPSSL200-3-AA	WPSSL200-3-R-AA	2	3	2-3/4	8-1/2	1/2	3-1/4	1/2
WPSSL200-5-AA	WPSSL200-5-R-AA	2	5	2-3/4	10-1/2	1/2	5-3/8	5/8
WPSSL250-3-AA	WPSSL250-3-R-AA	2-1/2	3	3-1/8	8-1/2	1/2	3-1/4	1/2
WPSSL250-5-AA	WPSSL250-5-R-AA	2-1/2	5	3-1/8	10-1/2	1/2	5-3/8	5/8
WPSSL300-3-AA	WPSSL300-3-R-AA	3	3	3-5/8	8-1/2	1/2	3-3/4	1/2
WPSSL300-5-AA	WPSSL300-5-R-AA	3	5	3-5/8	10-1/2	5/8	5-1/2	5/8
WPSSL350-3-AA	WPSSL350-3-R-AA	3-1/2	3	4	8-1/2	1/2	4-1/4	1/2
WPSSL350-5-AA	WPSSL350-5-R-AA	3-1/2	5	4	10-1/2	5/8	5-1/2	5/8
WPSSL400-3-AA	WPSSL400-3-R-AA	4	3	4-1/2	8-1/2	1/2	4-1/2	1/2
WPSSL400-5-AA	WPSSL400-5-R-AA	4	5	4-1/2	10-1/2	5/8	5-1/2	5/8
WPSSL450-3-AA	WPSSL450-3-R-AA	4-1/2	3	4-3/4	8-1/2	1/2	4-1/2	1/2
WPSSL450-5-AA	WPSSL450-5-R-AA	4-1/2	5	2-3/4	10-1/2	5/8	5-1/2	5/8
WPSSL500-3-AA	WPSSL500-3-R-AA	5	3	5	8-1/2	1/2	5	1/2
WPSSL500-5-AA	WPSSL500-5-R-AA	5	5	5	10-1/2	5/8	5-1/2	5/8
WPSSL500-7-AA	WPSSL500-7-R-AA	5	7	5	12-1/2	5/8	7-3/4	5/8
WPSSL600-3-AA	WPSSL600-3-R-AA	6	3	5-1/2	8-1/2	1/2	5-3/4	1/2
WPSSL600-5-AA	WPSSL600-5-R-AA	6	5	5-1/2	10-1/2	5/8	6	5/8
WPSSL800-5-AA	WPSSL800-5-R-AA	8	5	6-15/16	8-1/2	5/8	7-11/16	1/2
WPSSL800-7-AA	WPSSL800-7-R-AA	8	7	6-15/16	10-1/2	5/8	9-15/16	5/8

© 2010, AFL, all rights reserved. PP-3-00539, Revision 3, 11.2.2022
Specifications are subject to change without notice.

DOSSERT®

TYPE WPSV-AA

Vertical Welded Bus Support for Tubing or Pipe

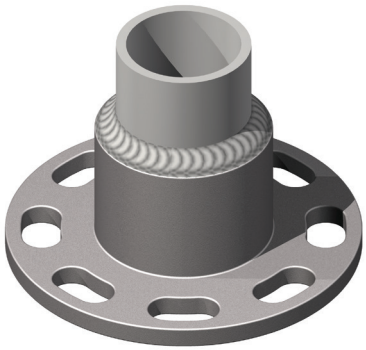

Material
Aluminum Alloy

Hardware
Galvanized steel bolts and lockwashers.

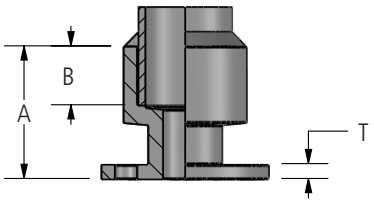

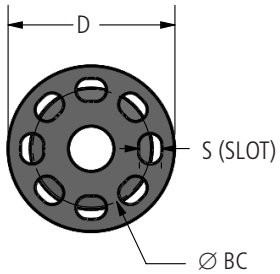

FIG. 1

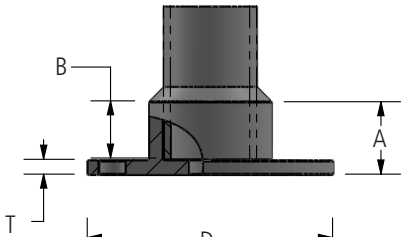

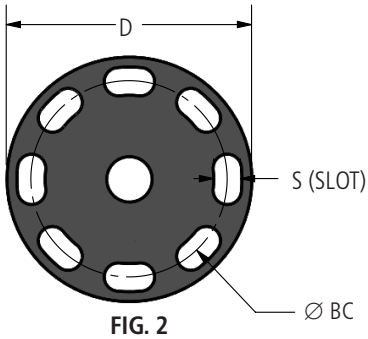

FIG. 2

Ordering Information

CATALOG NUMBER	SPS	BOLT CIRCLE	FIG. NO.	DIMENSIONS IN INCHES				
				A	B	D	S	T
WPSV100-3-AA	1	3	2	1-3/8	1	4-1/4	9/16	3/8
WPSV125-3-AA	1-1/4	3	1	3	1-1/4	4-1/4	9/16	3/8
WPSV125-5-AA	1-1/4	5	2	1-3/8	1	6-1/4	11/16	3/8
WPSV150-3-AA	1-1/2	3	1	3	1-1/4	4-1/4	9/16	3/8
WPSV150-5-AA	1-1/2	5	2	1-7/8	1-1/2	6-1/4	11/16	3/8
WPSV200-3-AA	2	3	1	3-3/8	1-1/2	4-1/4	9/16	3/8
WPSV200-5-AA	2	5	2	2-1/8	1-3/4	6-1/4	11/16	3/8
WPSV250-3-AA	2-1/2	3	1	3-3/4	1-3/4	4-1/4	9/16	3/8
WPSV250-5-AA	2-1/2	5	2	2-1/8	1-3/4	6-1/4	11/16	3/8
WPSV300-3-AA	3	3	1	3-7/8	1-3/4	4-1/4	9/16	3/8
WPSV300-5-AA	3	5	1	3-5/8	1-3/4	6-1/4	11/16	3/8
WPSV300-7-AA	3	7	2	2-1/8	1-3/4	8-1/2	13/16	3/8
WPSV350-3-AA	3-1/2	3	1	4-5/16	2	4-1/4	9/16	7/16
WPSV350-5-AA	3-1/2	5	1	4-5/16	2	6-1/4	11/16	7/16
WPSV350-7-AA	3-1/2	7	2	2-1/2	2	8-1/2	13/16	1/2
WPSV400-3-AA	4	3	1	3-7/8	1-3/4	4-1/4	9/16	3/8
WPSV400-5-AA	4	5	1	3-7/8	1-3/4	6-1/4	11/16	3/8
WPSV400-7-AA	4	7	1	3-7/8	1-3/4	8-1/2	13/16	1/2
WPSV450-3-AA	4-1/2	3	1	4-5/16	2	4-1/4	9/16	3/8
WPSV450-5-AA	4-1/2	5	1	4-1/8	1-3/4	6-1/4	11/16	3/8
WPSV450-7-AA	4-1/2	7	1	4-7/16	2	8-1/2	13/16	1/2
WPSV500-3-AA	5	3	1	4-5/16	2	4-1/4	9/16	1/2
WPSV500-5-AA	5	5	1	5-1/16	2	6-1/4	11/16	1/2
WPSV500-7-AA	5	7	1	5-1/16	2	8-1/2	13/16	1/2
WPSV600-3-AA	6	3	1	5-1/4	3	4-1/4	9/16	3/8
WPSV600-5-AA	6	5	1	5-3/8	3	6-1/4	11/16	1/2
WPSV600-7-AA	6	7	1	5-3/8	3	8-1/2	13/16	1/2
WPSV800-5-AA	8	5	1	6-3/8	3-3/4	6-1/4	11/16	1/2
WPSV800-7-AA	8	7	1	6-3/8	3-3/4	8-1/2	13/16	1/2

© 2010, AFL, all rights reserved. PP-3-00541, Revision 4, 11.2.2022
Specifications are subject to change without notice.

TYPE WXBC-AA, WXBC-E-AA

Expansion Support is designed to compensate for expansion and contraction in long bus runs.

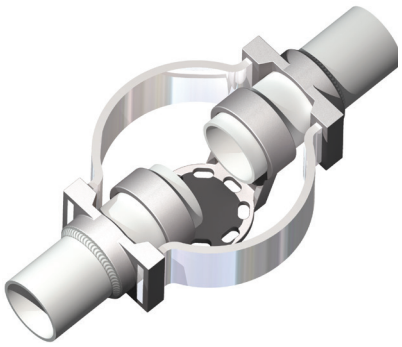

WXBC-AA

Material

Aluminum Alloy

Hardware

Galvanized steel bolts and lockwashers

Notes

- For Welded End Plug, add "-WP" to the catalog number. EX: WXBC400-5-AA-WP
- For Chatter Spring, add "-CH" to the catalog number. EX: WXBC400-5-CH-AA

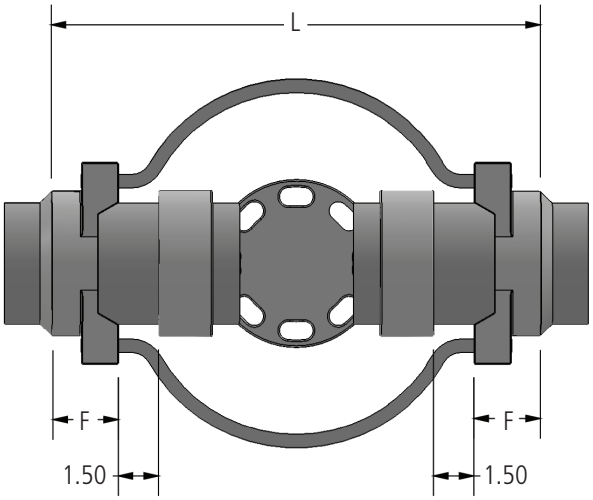

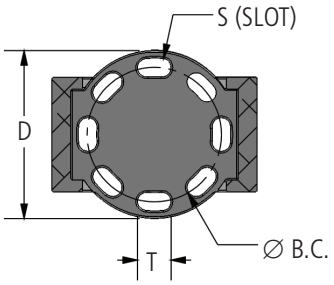

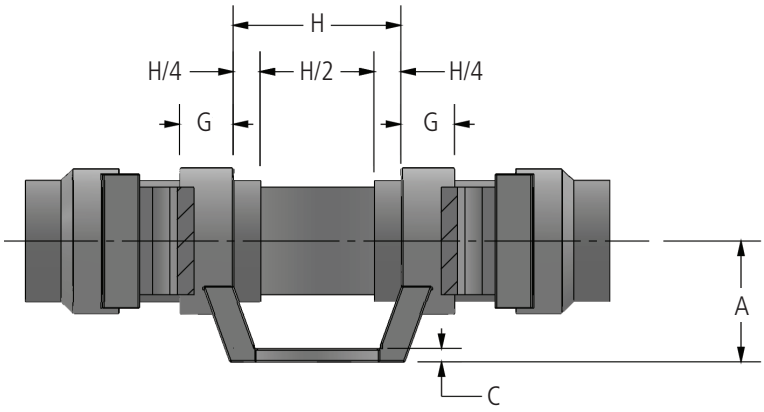

AFL's Dossert® product line offers a wide range of substation accessories in low voltage up to 765 kV applications in bronze or aluminum materials.

continued

© 2010, AFL, all rights reserved. PP-3-00590, Revision 2, 6.23.2026
Specifications are subject to change without notice.

TYPE WXBC-AA, WXBC-E-AA

Ordering Information

Catalog Number		SPS	Dimensions in Inches									
Schedule 40	Schedule 80		A	B.C.	C	D	F	G	H	L	S	T
WXBC100-3-AA	WXBC100E-3-AA	1	2.00	3.00	0.38	4.25	1.50	1.25	4.50	13.00	0.56	0.81
WXBC125-3-AA	WXBC125E-3-AA	1 1/4	2.25	3.00	0.38	4.25	1.50	1.25	4.50	13.00	0.56	0.81
WXBC125-5-AA	WXBC125E-5-AA	1 1/4	2.38	5.00	0.38	6.25	1.50	1.25	6.25	14.75	0.69	1.06
WXBC150-3-AA	WXBC150E-3-AA	1 1/2	2.50	3.00	0.38	4.25	1.75	1.25	4.50	13.50	0.56	0.81
WXBC150-5-AA	WXBC150E-5-AA	1 1/2	2.50	5.00	0.38	6.25	1.75	1.25	6.25	15.25	0.69	1.06
WXBC200-3-AA	WXBC200E-3-AA	2	2.75	3.00	0.38	4.25	2.19	1.25	4.50	14.38	0.56	0.81
WXBC200-5-AA	WXBC200E-5-AA	2	2.75	5.00	0.38	6.25	2.19	1.25	6.25	16.13	0.69	1.06
WXBC200-7-AA	WXBC200E-7-AA	2	2.75	7.00	0.38	8.50	2.19	1.25	8.75	18.75	0.81	1.63
WXBC250-3-AA	WXBC250E-3-AA	2 1/2	3.13	3.00	0.38	4.25	2.19	1.25	4.50	14.38	0.56	0.81
WXBC250-5-AA	WXBC250E-5-AA	2 1/2	3.13	5.00	0.38	6.25	2.19	1.25	6.25	16.13	0.69	1.06
WXBC250-7-AA	WXBC250E-7-AA	2 1/2	3.13	7.00	0.38	8.50	2.19	1.25	8.75	18.75	0.81	1.63
WXBC300-3-AA	WXBC300E-3-AA	3	3.63	3.00	0.44	4.25	2.31	1.63	4.50	14.63	0.56	0.81
WXBC300-5-AA	WXBC300E-5-AA	3	3.63	5.00	0.50	6.25	2.31	1.63	6.50	16.38	0.69	1.06
WXBC300-7-AA	WXBC300E-7-AA	3	3.63	7.00	0.44	8.50	2.31	1.63	8.75	19.75	0.81	1.63
WXBC350-3-AA	WXBC350E-3-AA	3 1/2	4.00	3.00	0.50	4.25	2.31	1.25	4.50	14.63	0.56	0.81
WXBC350-5-AA	WXBC350E-5-AA	3 1/2	4.00	5.00	0.50	6.25	2.25	1.25	7.13	17.13	0.69	1.06
WXBC350-7-AA	WXBC350E-7-AA	3 1/2	4.00	7.00	0.50	6.25	2.25	1.25	8.75	19.75	0.81	1.63
WXBC350-5-S-AA	WXBC350E-5-S-AA	3 1/2	5.00	5.00	0.50	6.25	2.25	1.25	7.13	17.13	0.69	1.06
WXBC400-3-AA	WXBC400E-3-AA	4	4.50	3.00	0.50	4.25	2.50	2.00	4.50	15.50	0.56	0.81
WXBC400-5-AA	WXBC400E-5-AA	4	4.50	5.00	0.50	6.25	2.50	2.00	6.25	17.25	0.69	1.06
WXBC400-7-AA	WXBC400E-7-AA	4	4.50	7.00	0.50	8.50	2.50	2.00	8.75	20.50	0.81	1.63
WXBC500-3-AA	WXBC500E-3-AA	5	5.00	3.00	0.50	4.25	2.50	2.00	4.50	15.50	0.56	0.81
WXBC500-5-AA	WXBC500E-5-AA	5	5.00	5.00	0.50	6.25	2.50	2.00	6.25	18.25	0.69	1.06
WXBC500-7-AA	WXBC500E-7-AA	5	5.00	7.00	0.63	8.50	2.50	2.00	8.75	19.75	0.81	1.63
WXBC500-5-S-AA	WXBC500E-5-S-AA	5	4.88	5.00	0.50	6.25	2.50	2.00	6.25	17.25	0.69	1.06
WXBC600-3-AA	WXBC600E-3-AA	6	5.50	3.00	0.50	4.25	2.50	2.00	4.50	15.50	0.56	0.81
WXBC600-5-AA	WXBC600E-5-AA	6	5.50	5.00	0.50	6.25	2.50	2.00	6.25	19.75	0.69	1.06
WXBC600-7-AA	WXBC600E-7-AA	6	5.50	7.00	0.63	8.50	25.50	2.00	8.75	22.75	0.81	1.63
WXBC800R-5-AA	—	8 OD	6.38	5.00	0.50	6.25	2.50	2.00	6.38	18.38	0.69	1.25
WXBC800R-7-AA	—	8 OD	6.38	7.00	0.63	8.50	3.00	2.00	8.50	21.50	0.81	1.63
WXBC800-5-AA	WXBC800E-5-AA	8	6.89	5.00	0.50	6.25	2.50	2.00	6.25	18.25	0.69	1.25

© 2010, AFL, all rights reserved. PP-3-00590, Revision 2, 6.23.2026
Specifications are subject to change without notice.

AFL
AFLglobal.com/contact
Sales & Support