Table of Contents

230 kV Aluminum Bolted

230 kV Bolted Table of Contents . . . 245
Pictorial Index . . . 247

Bolted Bus Supports

Type 16300, 16500, 16700 . . . 251
Type 31400 . . . 252
Type CBP-AA . . . 253
Type CSD-AA . . . 254
Type CSP-AA, C2SP-AA . . . 255
Type CVSP-AA . . . 256
Type PB-AA, PBP-AA . . . 257
Type PL-AA . . . 258
Type PLH-AA . . . 259
Type PSC-AA . . . 260
Type PSD-AA, PSD-CH-AA . . . 261
Type PSDC-AA . . . 263
Type PSDCS-AA . . . 264
Type PSG-AA . . . 265
Type PSRE-AA . . . 266
Type PSS-AA, PSS-CH-AA . . . 267
Type PSSR-AA, PSSR-CH-AA . . . 269
Type PSU-AA . . . 270
Type PSV-AA . . . 271
Type SAH-AA, SHH-AA . . . 272
Type SAV-AA, SHV-AA . . . 273
Type XBC-AA . . . 275
Type XBCW-AA . . . 276

Bolted Couplers

Type BCX-AA . . . 277
Type CCV-AA . . . 278
Type CP-AA . . . 279
Type RCV-AA . . . 280
Type RP-AA . . . 281
Type RPCV-AA . . . 282
Type UK-AA . . . 284
Type UKR-AA . . . 285
Type UPK-AA . . . 286
Type XCW-AA . . . 287

Bolted Corona Bells

Type CI-AA . . . 288
Type 16200 . . . 289
Type CX-AA . . . 290

Bolted Dead End Clamps

Type DEC-AA, DEC-G-AA . . . 291
Type SEC-A-2U-AA . . . 292
Type SEC-AA, SEC-P-AA . . . 293

Bolted Elbows

Type EP-AA, EP-30-AA, EP-45-AA, EP-60-AA . . . 294

Bolted Bar Clamps and Spacers

Type BS-AA . . . 295
Type DA-AA . . . 296
Type DH-AA . . . 297

Bolted Ground Clamps

Type GA-AA, GAA-AA . . . 298
Type GD-AA . . . 299
Type GF-AA . . . 300
Type GPC-AA . . . 301
Type GS-AA . . . 303
Type GW-AA . . . 304
Type GCHV-AA . . . 305
Type GPH-AA . . . 306
Type GPH-N-AA . . . 307

Bolted Parallel Clamps

Type AC, ACA . . . 308
Type AC100-AA . . . 310
Type PC-AA . . . 311
Type TRV-AA . . . 313
Series 390 and 490 Distribution Parallel Groove Clamps . . . 314
Series 480 Center Bolt Clamps . . . 315
Series 580 U-Bolt Clamps . . . 316
Type UD-AA . . . 317

© 2011, AFL, all rights reserved. PP-3-00132 , Revision 16, 11.12.2024
Specifications are subject to change without notice.

Table of Contents

230 kV Aluminum Bolted

Bolted Stud Connectors

Type SCB-F-N-AA 318
Type SCV-AA 320
Type SCX-AA, S2CX-AA 322
Type SP-AA 322
Type SX-AA, SX-90-AA 324
Type SXLW-SI-AA 326

Bolted Tee and Vee Connectors

Type BAP-AA 327
Type BCV-AA 329
Type BP-AA, BPA-75-AA, BPA-80-AA 331
Type BPCV-AA, BP2CV-AA 333
Type PFTS-AA 336
Type U2T-AA, UUTT-AA 338
Type UPT-AA 340
Type UT-AA, UUT-AA 342
Type VBP-20-AA, VBP-30-AA 345
Type CFTL-AA 347

Bolted Cable Spacers

Type CASV-AA 348
Type CASV-N-AA, CASV-N-90-AA 350

Bolted Terminal Connectors

Type CFTV-AA 352
Type T3CV-AA 354
Type T2CV-AA, T2CVA-30-AA, T2CVA-45-AA, T2CVA-90-AA 356
Type TCV-N-AA, TCVA-15-AA, TCVA-30-AA, TCVA-45-AA, TCVA-90-AA 360
Type TCX-AA 362
Type TP-AA, TPA-30-AA, TPA-45-AA, TPA-60-AA, TPA-90-AA 364
Type TPC-AA 366
Type U2L-AA, U2LA-45-AA, U2LA-90-AA 368
Type UL-AA, ULA-45-AA, ULA-90-AA 369
Type XLW-AA 371
Type XLW-90V-AA, XLWO-AA 373
Type BM Series 375

Bolted Vibration Dampers

Type 1706 Series 376

© 2011, AFL, all rights reserved. PP-3-00132 , Revision 16, 11.12.2024
Specifications are subject to change without notice.

230 kV Aluminum Bolted Bus Supports

	16300, 16500, 16700 SERIES PG. 251
	31400 SERIES PG. 252
	CBP-AA SERIES PG. 253
	CSD-AA SERIES PG. 254
	CSP-AA SERIES PG. 255
	C2SP-AA SERIES PG. 255
	CVSP-AA SERIES PG. 256
	PB-AA SERIES PG. 257
	PBP-AA SERIES PG. 257
	PL-AA SERIES PG. 258
	PLH-AA SERIES PG. 259
	PSC-AA SERIES PG. 260
	PSD-CH-AA SERIES PG. 261
	PSDC-AA SERIES PG. 263
	PSDCS-AA SERIES PG. 264
	PSG-AA SERIES PG. 265
	PSRE-AA SERIES PG. 266
	PSS-AA SERIES PG. 267
	PSS-CH-AA SERIES PG. 267
	PSSR-AA SERIES PG. 269
	PSU-AA SERIES PG. 270
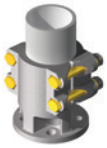	PSV-AA SERIES PG. 271
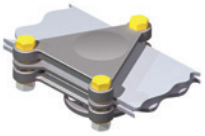	SAH-AA SERIES PG. 272
	SHH-AA SERIES PG. 272
	SAV-AA SERIES PG. 273
	SHV-AA SERIES PG. 273
	XBC-AA SERIES PG. 275
	XBCW-AA SERIES PG. 276

© 2011, AFL, all rights reserved. PP-3-00082, Revision 9, 11.30.2023
Specifications are subject to change without notice.

230 kV or Less Aluminum Bolted

230 kV Aluminum Bolted Couplers

	BCX-AA SERIES PG. 277
	CCV-AA SERIES PG. 278
	CP-AA SERIES PG. 279
	RCV-AA SERIES PG. 280
	RP-AA SERIES PG. 281
	RPCV-AA SERIES PG. 282
	UK-AA SERIES PG. 284
	UKR-AA SERIES PG. 285
	UPK-AA SERIES PG. 286
	XCW-AA SERIES PG. 287

230 kV Aluminum Bolted Corona Bells

	CI-AA SERIES PG. 288
	16200 SERIES PG. 289
	CX-AA SERIES PG. 290

230 kV Aluminum Dead End Clamps

	DEC-AA SERIES PG. 291
	DEC-G-AA PG. 291
	SEC-A-2U SERIES PG. 292
	SEC-AA SERIES PG. 293

230 kV Aluminum Bolted Elbows

	EP-AA SERIES PG. 294
	EP-30-AA SERIES PG. 294
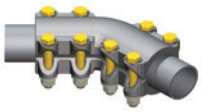	EP-45-AA SERIES PG. 294
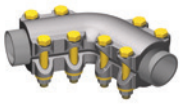	EP-60-AA SERIES PG. 294

230 kV Aluminum Bolted Bar Clamps And Spacers

	BS-AA SERIES PG. 295
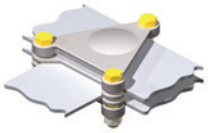	DA-AA SERIES PG. 296
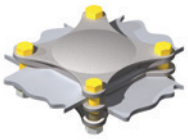	DH-AA SERIES PG. 297

© 2011, AFL, all rights reserved. PP-3-00082, Revision 9, 11.30.2023
Specifications are subject to change without notice.

230 kV or Less Aluminum Bolted

230 kV Aluminum Bolted Ground Clamps

	GA-AA, GAA-AA SERIES PG. 298
	GD-AA SERIES PG. 299
	GF-AA SERIES PG. 300
	GPC-AA SERIES PG. 301
	GS-AA SERIES PG. 303
	GW-AA SERIES PG. 304
	GCHV-AA SERIES PG. 305
	GPH-AA SERIES PG. 306
	GPH-N-AA SERIES PG. 307

230 kV Aluminum Bolted Parallel Clamps

	AC, ACA SERIES PG. 308
	AC100-AA SERIES PG. 310
	PC-AA SERIES PG. 311
	TRV-AA SERIES PG. 313
	390, 490 SERIES PG. 314
	480 SERIES PG. 315
	580 SERIES PG. 316
	UD-AA SERIES PG. 317

230 kV Aluminum Bolted Stud Connectors

	SCB-F-N-AA SERIES PG. 318
	SCV-AA SERIES PG. 320
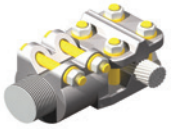	SCX-AA SERIES PG. 322
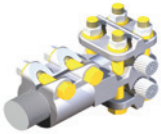	S2CX-AA SERIES PG. 322
	SP-AA SERIES PG. 323
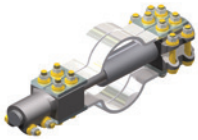	SX-AA SERIES PG. 324
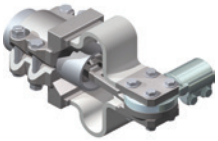	SXLW-SI-AA SERIES PG. 326

230 kV Aluminum Bolted Tee and Vee Connectors

	BAP-AA SERIES PG. 327
	BCV-AA SERIES PG. 329
	BP-AA, BPA-AA SERIES PG. 331

© 2011, AFL, all rights reserved. PP-3-00082, Revision 9, 11.30.2023
Specifications are subject to change without notice.

230 kV or Less Aluminum Bolted

	BPCV-AA, BP2CV-AA SERIES PG. 333
	PFTS-AA SERIES PG. 336
	U2T-AA, UUTT-AA SERIES PG. 338
	UPT-AA SERIES PG. 340
	UT-AA, UUT-AA SERIES PG. 342
	VBP-AA SERIES PG. 345
	CFTL-AA SERIES PG. 347

230 kV Aluminum Bolted Cable Spacers

	CASV-AA SERIES PG. 348
	CASV-N-AA, CASV-N-90-AA SERIES PG. 350

230 kV Aluminum Bolted Terminal Connectors

	CFTV-AA SERIES PG. 352
	T3CV-AA PG. 354
	T2CV-AA, T2CVA-30-AA, -45, -90 SERIES PG. 356
	TCV-AA, TCVA-15-AA, -30, -45, -90 SERIES PG. 360
	TCX-AA SERIES PG. 362
	TP, TPA-30-AA, -45, -90 SERIES PG. 364
	TPC-AA SERIES PG. 366

	U2L-AA, U2LA-45-AA, -90 SERIES PG. 368
	UL-AA, ULA-45-AA, -90 SERIES PG. 369
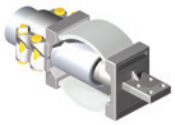	XLW-AA SERIES PG. 371
	XLW-90V-AA, XLWO-AA SERIES PG. 373
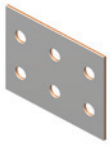	BM SERIES PG. 375

230 kV Aluminum Bolted Vibration Bampers

	1706 SERIES PG. 376

© 2011, AFL, all rights reserved. PP-3-00082, Revision 9, 11.30.2023
Specifications are subject to change without notice.

DOSSERT®

TYPE 16300, 16500, 16700

Cable Support

The 16300, 16500 and 16700 series supports are designed for mounting stranded aluminum or ACSR conductors. New cable support reduces stock with extended range taking capabilities. These supports can be used for two or four conductors and the cables can be oriented in any angle from the base. Three supports provide cable range from 4/0 to 3500 MCM. Available in 3", 5" and 7" bolt circles.

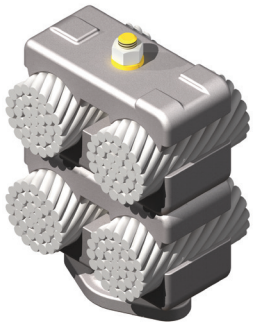

Material

Aluminum Alloy

Hardware

Yellow anodized aluminum nuts, bolts and lockwashers.
Galvanized steel mounting hardware included.

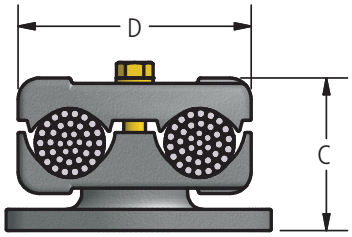

FIG. 1

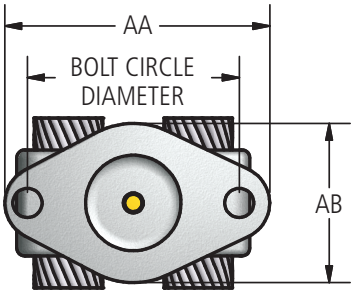

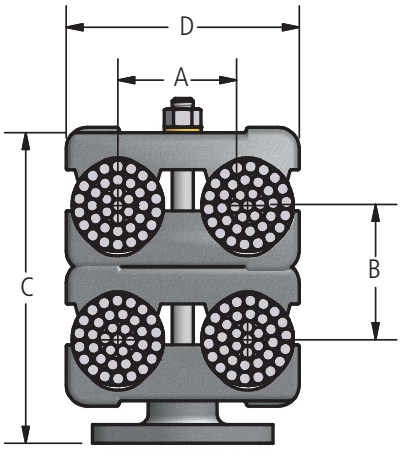

FIG. 2

Ordering Information

NO. OF CABLES	FIG. NO.	AAC CABLE RANGE		CATALOG NUMBER			DIAMETER RANGE	DIMENSIONS IN INCHES						ULTIMATE CANTILEVER FORCE (LBS)
		MIN	MAX	3" BOLT CIRCLE	5" BOLT CIRCLE	7" BOLT CIRCLE	IN.	A	B		C		D	
									MIN	MAX	MIN	MAX		
2	1	4/0	795 MCM	16320-795C	16520-795C	16720-795C	.522 - 1.026	2.40	-	-	3 1/16	3 13/16	4 3/8	600
4	2	4/0	795 MCM	16340-795C	16540-795C	16740-795C	.522 - 1.026	2.40	1 13/16	2 1/2	4 7/8	6 1/4	4 3/8	300
2	1	795 MCM	2000 MCM	16320-2000C	16520-2000C	16720-2000C	1.026 - 1.630	2.40	-	-	3 1/4	4 1/16	4 3/8	600
4	2	795 MCM	2000 MCM	16340-2000C	16540-2000C	16740-2000C	1.026 - 1.630	2.40	2	2 13/16	5 1/4	6 7/8	4 3/8	300
2	1	2000 MCM	3500 MCM	16320-3500C	16520-3500C	16720-3500C	1.630 - 2.158	2.75	-	-	3 7/8	4 1/2	5 1/2	600
4	2	2000 MCM	3500 MCM	16340-3500C	16540-3500C	16740-3500C	1.630 - 2.158	2.75	2 5/8	3 3/16	7 9/16	7 9/16	5 1/2	300

BOLT MOUNTING CIRCLE	DIMENSIONS IN INCHES	
IN	AA	AB
3	4.25	2.50
5	6.25	3.75
7	8.75	3.75

© 2011, AFL, all rights reserved. PP-3-00159, Revision 2, 11.30.18
Specifications are subject to change without notice.

230 kV Aluminum Bolted Bus Supports

DOSSERT®

TYPE 31400

Bus Support Slip Or Fixed

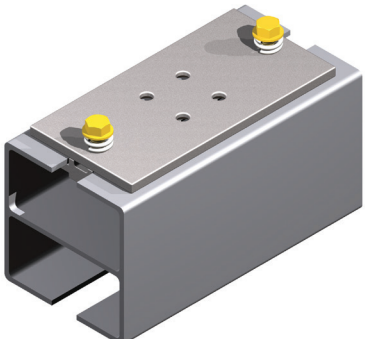

The 31400 Series support is designed to provide reliable mounting for integral web channel bus (IWCB) conductors. Support may be used for tight fit or slip fit applications by rotating keeper. Assembly includes four galvanized steel flat head cap screws for mounting on insulator.

Material

Aluminum Alloy

Hardware

Yellow anodized aluminum bolts, nuts, and lockwashers.
Galvanized steel mounting hardware included.

Ordering Instructions

Step 1: Determine the catalog number based on the IWCB being used and the bolt circle mount (BCM).

Step 2: For slip application, add 'AC'. For Fixed application, leave blank. Ex: A bus support for 4"x 4" IWBC with a 5" BCM for a slip application, the complete catalog number is: 31444-5AC

Step 3: Build Catalog Number
Slip or Fixed Application + Catalog Number

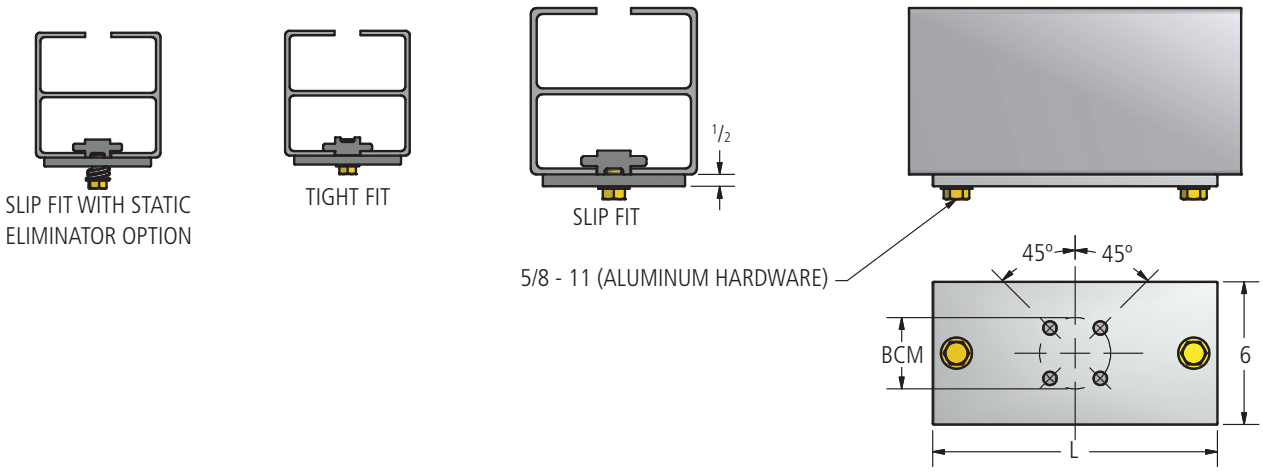

Ordering Information

CONDUCTOR SIZE	CATALOG NUMBER		NOMINAL WEIGHT		DIMENSIONS
IWCB	3" BOLT CIRCLE (76.2 MM)	5" BOLT CIRCLE (127.0 MM)	3" BOLT CIRCLE	5" BOLT CIRCLE	L
IN			LBS	LBS	INCHES
4x4	31444-3	31444-5	6.2	6.3	12
6x4	31464-3	31464-5	6.3	6.4	12
6x5	31465-3	31465-5	7.9	8	12
6x6	31466-3	31466-5	7.2	7.3	12
7x7	31477-3	31477-5	7.2	7.3	12
8x5	31485-3	31485-5	7.2	7.3	12
8x8	31488-3	31488-5	7.2	7.3	12
9x9	31499-3	31499-5	8.3	8.4	12
10x10	B4705-K	B4705-AC	8.67	8.69	16
12x12	B4705-M	B4705-AE	10.1	10.2	18

© 2011, AFL, all rights reserved. PP-3-00172, Revision 2, 7.27.18
Specifications are subject to change without notice.

DOSSERT®

TYPE CBP-AA

Two Unit Bus Support For Cable

A two unit, four piece cable support which mounts conductor to cap of insulator. A single unit for light service can be supplied on request. Clamp is furnished with cap screws for threading into tapped holes of insulator.

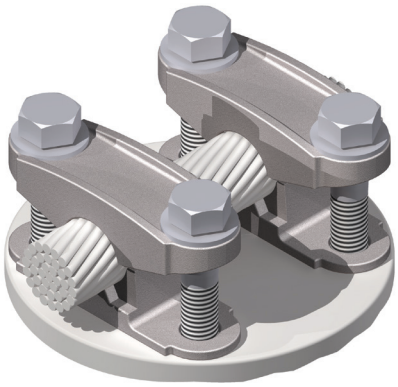

Material

Aluminum Alloy

Hardware

Galvanized steel bolts and lockwashers.

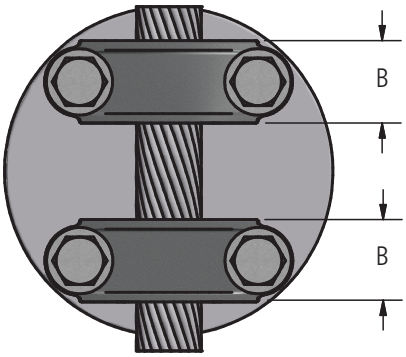

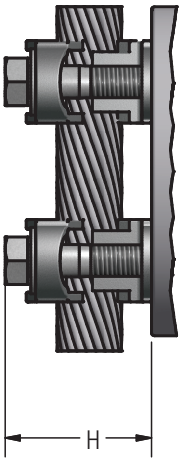

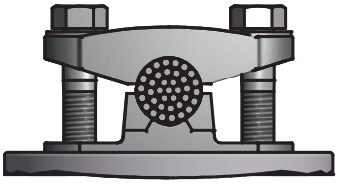

Ordering Information

CATALOG NUMBER	AAC CABLE RANGE		BOLT CIRCLE	DIMENSIONS IN INCHES		
	MIN	MAX		B	H	BOLT SIZE
CBP21-3-AA	2 Stranded	4/0 Stranded	3	1 1/8	1 9/16	1/2
CBP21-5-AA	2 Stranded	4/0 Stranded	5	1 3/8	1 13/16	5/8
CBP50-3-AA	2/0 Stranded	500 kcmil	3	1 1/8	1 13/16	1/2
CBP50-5-AA	2/0 Stranded	500 kcmil	5	1 3/8	2 9/32	5/8
CBP125-3-AA	550 kcmil	1250 kcmil	3	1 3/8	2 3/16	1/2
CBP125-5-AA	550 kcmil	1250 kcmil	5	1 5/8	2 3/4	5/8

© 2011, AFL, all rights reserved. PP-3-00274, 3, 11.8.2022
Specifications are subject to change without notice.

230 kV Aluminum Bolted Bus Supports

DOSSERT®
TYPE CSD-AA

Aluminum Bolted Bus Support For Cable or Pipe

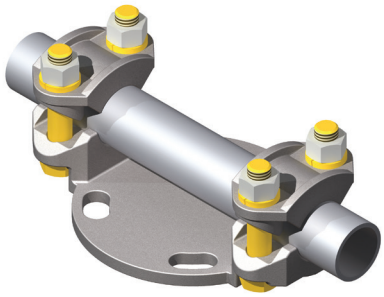

Material

Aluminum Alloy

Hardware

Yellow anodized aluminum nuts, bolts, and lockwashers.
Galvanized steel base mounting hardware is included.

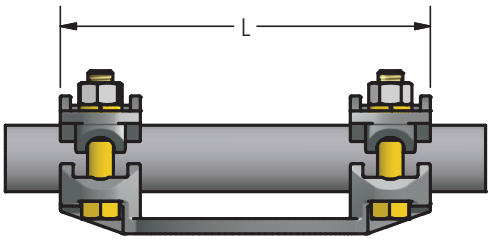

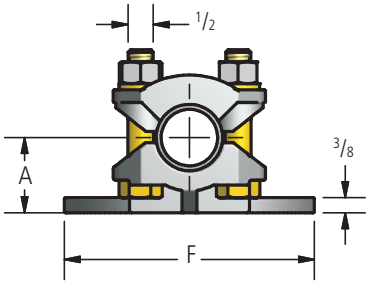

Ordering Information

CATALOG NUMBER	BOLT MOUNT CIRCLE	AAC CABLE RANGE		ACSR CABLE RANGE		DIMENSIONS IN INCHES		
		MIN	MAX	MIN	MAX	A	F	L
CSD21-3-AA	3	4SOL	4/0STR	6	4/0	1 1/8	4 1/4	7 1/8
CSD21-5-AA	5	4SOL	4/0STR	6	4/0	1 1/8	6 1/4	9 3/8
CSD55-3-AA	3	250	550	266.8	477	1 3/8	4 1/4	7 1/8
CSD55-5-AA	5	250	550	266.8	477	1 3/8	6 1/4	9 3/8
CSD111-3-AA	3	600	1113	556.5	1033.5	1 1/2	4 1/4	7 1/8
CSD111-5-AA	5	600	1113	556.5	1033.5	1 5/8	6 1/4	9 3/8
CSD200-3-AA	3	1200	2000	1113	1780	1 3/4	4 1/4	7 3/4
CSD200-5-AA	5	1200	2000	1113	1780	1 7/8	6 1/4	9 1/4

© 2011, AFL, all rights reserved. PP-3-00293, Rev 1, 7.3.13
Specifications are subject to change without notice.

DOSSERT®

TYPE CSP-AA, C2SP-AA

One or Two Pipe Cable Bus Support

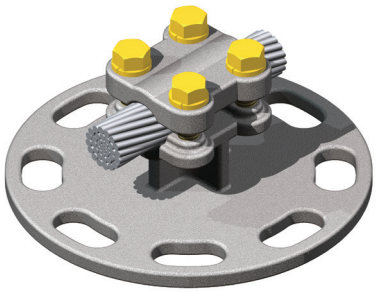

Pipe or Cable Bus Support for two cables or pipes.

Material

Aluminum Alloy

Hardware

Yellow anodized aluminum nuts, bolts, and lockwashers.
Galvanized steel base mounting hardware is included.

Notes

1. For a Double Cable Bus Support add a 2 after 'C'.
2. For two 300 MCM cable, with a 3 in Bolt Circle C2SP87-3-AA.
3. For base mounting dimensions and hardware see page 3 in the general catalog index.

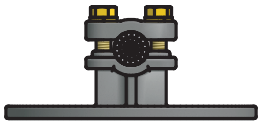

CSP-AA

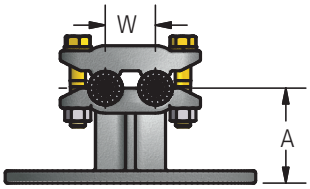

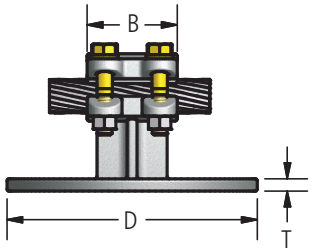

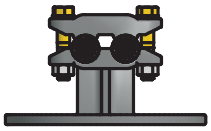

C2SP-AA

Ordering Information

CATALOG NUMBER	CABLE RANGE				SPS	BOLT CIRCLE	DIMENSIONS IN INCHES					BOLT SIZE
	ALUMINUM		ACSR									
	MIN	MAX	MIN	MAX			A	B	D	T	W	
CSP56-3-AA	8SOL	250MCM	6	#4/0	1/8-1/4	3	2 1/4	2 1/2	4 1/4	3/8	1	1/2
CSP56-5-AA	8SOL	250MCM	6	#4/0	1/8-1/4	5	2 1/4	2 1/2	6 1/4	3/8	1	1/2
CSP87-3-AA	300MCM	556.5MCM	226.8MCM	556.5MCM	3/8-1/2	3	2 1/2	2 1/2	4 1/4	3/8	1 1/4	1/2
CSP87-5-AA	300MCM	556.5MCM	226.8MCM	556.5MCM	3/8-1/2	5	2 1/2	2 1/2	6 1/4	3/8	1 1/4	1/2
CSP87-7-AA	300MCM	556.5MCM	226.8MCM	556.5MCM	3/8-1/2	7	2 1/2	2 1/2	8 1/2	1/2	1 1/4	1/2
CSP111-3-AA	636MCM	900MCM	556.5MCM	795MCM	1/2	3	2 3/4	2 3/4	4 1/4	3/8	1 1/2	1/2
CSP111-5-AA	636MCM	900MCM	556.5MCM	795MCM	1/2	5	2 3/4	2 3/4	6 1/4	3/8	1 1/2	1/2
CSP111-7-AA	636MCM	900MCM	556.5MCM	795MCM	1/2	7	2 3/4	2 3/4	8 1/2	1/2	1 1/2	1/2
CSP125-3-AA	954MCM	1192.5MCM	795MCM	1113MCM	3/4	3	3	2 3/4	4 1/4	3/8	1 3/4	1/2
CSP125-5-AA	954MCM	1192.5MCM	795MCM	1113MCM	3/4	5	3	2 3/4	6 1/4	1/2	1 3/4	1/2
CSP125-7-AA	954MCM	1192.5MCM	795MCM	1113MCM	3/4	7	3	2 3/4	8 1/2	1/2	1 3/4	1/2
CSP143-3-AA	1272MCM	1510.5MCM	1113MCM	1431MCM	1	3	3 3/8	2 3/4	4 1/4	3/8	1 7/8	1/2
CSP143-5-AA	1272MCM	1510.5MCM	1113MCM	1431MCM	1	5	3 3/8	2 3/4	6 1/4	1/2	1 7/8	1/2
CSP143-7-AA	1272MCM	1510.5MCM	1113MCM	1431MCM	1	7	3 3/8	2 3/4	8 1/2	1/2	1 7/8	1/2
CSP163-3-AA	1590MCM	2000MCM	1431MCM	1780MCM	1	3	3 1/2	2 3/4	4 1/4	3/8	2 1/16	5/8
CSP163-5-AA	1590MCM	2000MCM	1431MCM	1780MCM	1	5	3 1/2	2 3/4	6 1/4	1/2	2 1/16	5/8
CSP163-7-AA	1590MCM	2000MCM	1431MCM	1780MCM	1	7	3 1/2	2 3/4	8 1/2	1/2	2 1/16	5/8
CSP182-3-AA	2000MCM	2500MCM	2034MCM	2312MCM	1 1/4	3	3 5/8	3 1/4	4 1/4	3/8	2 1/2	5/8
CSP182-5-AA	2000MCM	2500MCM	2034MCM	2312MCM	1 1/4	5	3 5/8	3 1/4	6 1/4	3/8	2 1/2	5/8
CSP182-7-AA	2000MCM	2500MCM	2034MCM	2312MCM	1 1/4	7	3 5/8	3 1/4	8 1/2	1/2	2 1/2	5/8
CSP199-3-AA	2000MCM	3000MCM	2034MCM	2870MCM	1-1/4 - 1-1/2	3	3 5/8	3 1/4	4 1/4	3/8	2 5/8	5/8
CSP199-5-AA	2000MCM	3000MCM	2034MCM	2870MCM	1-1/4 - 1-1/2	5	3 5/8	3 1/4	6 1/4	1/2	2 5/8	5/8
CSP216-3-AA	2500MCM	3500MCM	—	—	1 1/2	3	3 5/8	3 1/4	4 1/4	7/16	3 1/4	5/8
CSP216-5-AA	2500MCM	3500MCM	—	—	1 1/2	5	3 5/8	3 1/4	6 1/4	7/16	3 1/4	5/8

© 2011, AFL, all rights reserved. PP-3-00294, Rev 6, 11.29.2023
Specifications are subject to change without notice.

230 kV Aluminum Bolted Bus Supports

DOSSERT®

TYPE CVSP-AA

Cable Bus Support

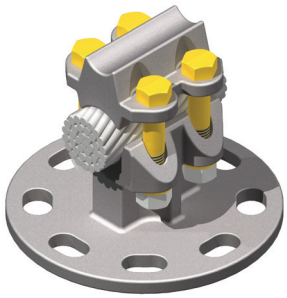

Base mounting holes are slotted to allow for misalignment in insulator stack. Used for both cable and pipe applications. Reversible for covering a broad range of conductor sizes.

Material

Aluminum Alloy

Hardware

Yellow anodized aluminum nuts, bolts, and lockwashers.
Galvanized steel base mounting hardware is included.

Note

For base mounting dimensions and hardware see page 3 in the general catalog index.

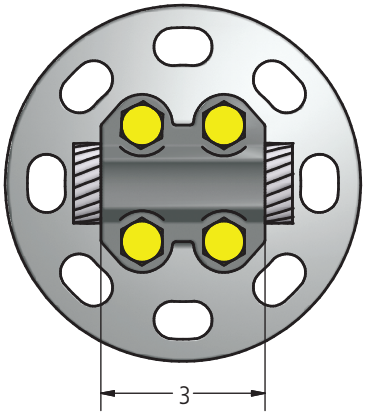

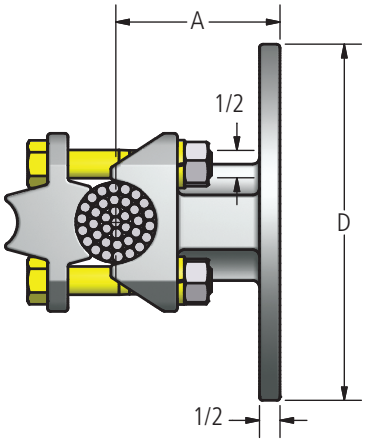

Ordering Information

CATALOG NUMBER	ALUMINUM		SPS		BOLT CIRCLE	DIMENSIONS IN INCHES	
	MIN	MAX	SMALL GROOVE	LARGE GROOVE		A	D
CVSP143A-3-AA	3/0 ACSR-700 MCM AL	750 MCM AL. - 1431 ACSR	1/4	1	3	3	4 1/4
CVSP143A-5-AA	3/0 ACSR-700 MCM AL	751 MCM AL. - 1431 ACSR	1/4	1	5	3	6 1/4

© 2011, AFL, all rights reserved. Rev 1, PP-3-00299, 11.7.17
Specifications are subject to change without notice.

230 kV Aluminum Bolted Bus Supports

DOSSERT®

TYPE PB-AA, PBP-AA

Bus Support With Two Unit Caps

A two unit cap clamping bus support for mounting on insulator bolt circle. Type PB clamps bus directly to insulator while type PBP is provided with two independent matching bus saddles. Available for either cap or base mounting. Unless otherwise specified supports are furnished for cap mounting as illustrated.

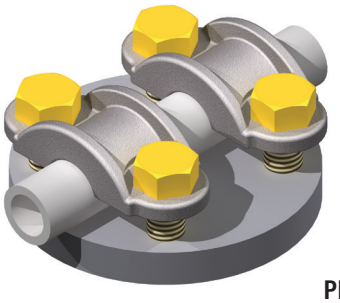

PB-AA

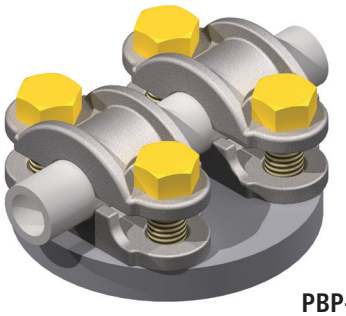

PBP-AA

Material

Aluminum Alloy

Hardware

Yellow anodized aluminum bolts, nuts, and lockwashers.

Note

For a 1" SPS pipe, 3" bolt circle, and saddle order PBP100-3-AA.

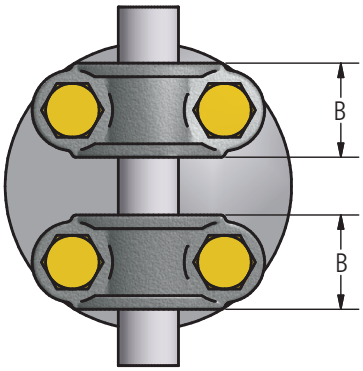

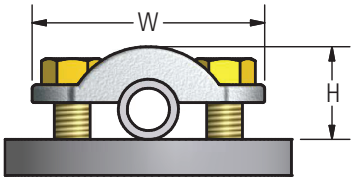

PB-AA

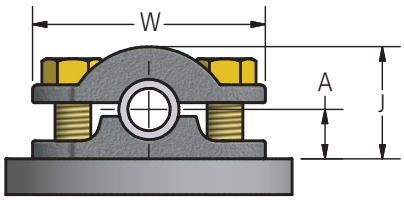

PBP-AA

Ordering Information

CATALOG NUMBER		SPS	BOLT CIRCLE	DIMENSIONS IN INCHES					BOLT SIZE
				A	B	H	J	W	
PB50-3-AA	PBP50-3-AA	1/2	3	3/4	1 5/16	1 3/8	1 11/16	3 1/4	1/2
PB50-5-AA	PBP50-5-AA	1/2	5	3/4	1 3/8	1 1/2	1 13/16	4 15/16	5/8
PB75-3-AA	PBP75-3-AA	3/4	3	7/8	1 5/16	1 9/16	1 15/16	3 1/4	1/2
PB75-5-AA	PBP75-5-AA	3/4	5	7/8	1 3/8	1 11/16	2 1/16	4 15/16	5/8
PB100-3-AA	PBP100-3-AA	1	3	1	1 1/2	1 3/4	2 1/8	3 1/4	1/2
PB100-5-AA	PBP100-5-AA	1	5	1	1 5/8	2	2 5/16	4 15/16	5/8
PB125-3-AA	PBP125-3-AA	1 1/4	3	1 1/8	1 1/2	2 1/8	2 7/16	3 1/4	1/2
PB125-5-AA	PBP125-5-AA	1 1/4	5	1 1/8	1 5/8	2 3/8	2 11/16	4 15/16	5/8
PB150-5-AA	PBP150-5-AA	1 1/2	5	1 1/4	1 3/4	2 7/16	2 3/4	4 15/16	5/8
PB200-5-AA	PBP200-5-AA	2	5	1 1/2	1 3/4	2 3/4	3 1/16	4 15/16	5/8
PB250-5-AA	PBP250-5-AA	2 1/2	5	1 3/4	1 7/8	3 5/16	3 5/8	4 15/16	5/8

© 2011, AFL, all rights reserved. PP-3-00390, 1.12.11
Specifications are subject to change without notice.

230 kV Aluminum Bolted Bus Supports

DOSSERT®

TYPE PL-AA

Pipe Bus Support Slide or Tight Fit

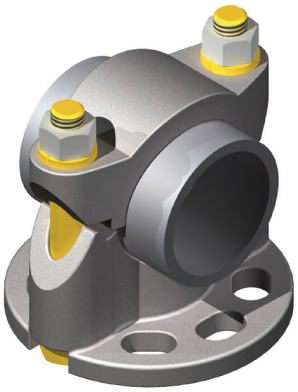

Material

Aluminum Alloy

Hardware

Yellow anodized aluminum bolts, nuts, and lockwashers.
Galvanized steel base mounting hardware is included.

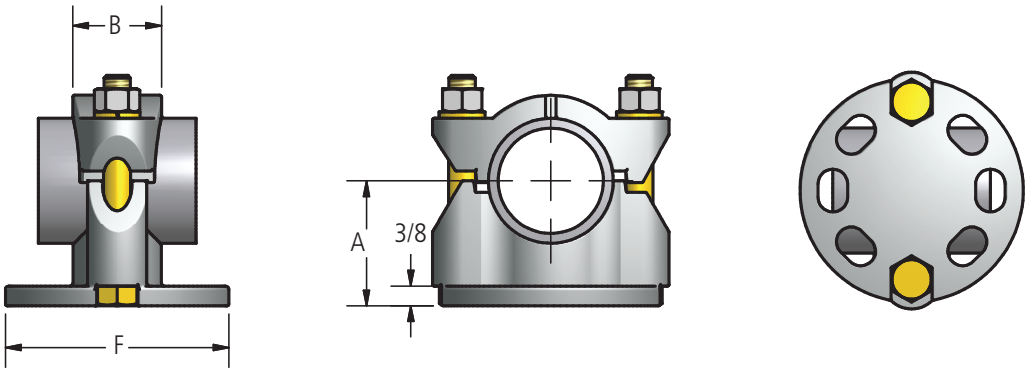

Ordering Information

CATALOG NUMBER	SPS	BOLT CIRCLE	DIMENSIONS IN INCHES			
			A	B	F	BOLT SIZE
PL75-3-AA	3/4	3	1 3/8	1 1/2	4 1/4	1/2
PL75-5-AA	3/4	5	1	1 1/2	6 1/4	1/2
PL100-3-AA	1	3	1 5/8	1 1/2	4 1/4	1/2
PL100-5-AA	1	5	1 1/8	1 1/2	6 1/4	1/2
PL125-3-AA	1 1/4	3	1 3/4	1 11/16	4 1/4	1/2
PL125-5-AA	1 1/4	5	1 3/8	1 11/16	6 1/4	1/2
PL150-3-AA	1 1/2	3	2	1 11/16	4 1/4	1/2
PL150-5-AA	1 1/2	5	1 1/2	1 11/16	6 1/4	1/2
PL200-3-AA	2	3	2 3/8	1 11/16	4 1/4	1/2
PL200-5-AA	2	5	2 1/4	1 11/16	6 1/4	1/2
PL250-3-AA	2 1/2	3	2 5/8	1 3/4	4 1/4	1/2
PL250-5-AA	2 1/2	5	2 1/2	1 3/4	6 1/4	1/2
PL300-3-AA	3	3	2 7/8	1 3/4	6 1/4	5/8
PL300-5-AA	3 1/2	5	3	1 3/4	6 1/4	5/8

© 2011, AFL, all rights reserved. PP-3-00398, 1.12.11
Specifications are subject to change without notice.

DOSSERT®

TYPE PLH-AA

Pipe Bus Support Sliding Ring

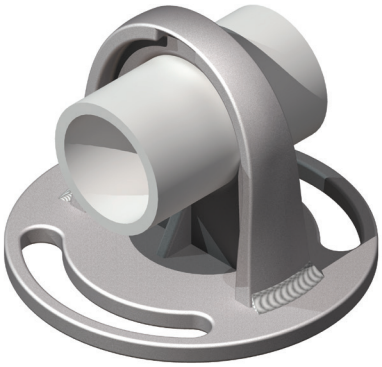

Material

Aluminum Alloy

Hardware

Galvanized steel mounting hardware included.

Note

For Chatter Spring, add -CH to catalog number. Example: PLH300-3-CH-AA

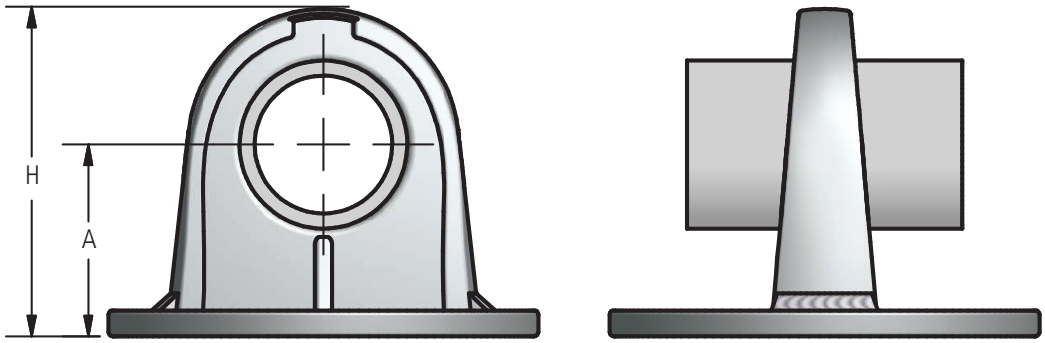

Ordering Information

CATALOG NUMBER	SPS	BOLT CIRCLE	DIMENSIONS IN INCHES	
			A	H
PLH50-3-AA	1/2	3	1-3/4	3
PLH50-5-AA	1/2	5	2-1/8	3-3/4
PLH75-3-AA	3/4	3	2	3-3/8
PLH75-5-AA	3/4	5	2-1/4	4-1/8
PLH100-3-AA	1	3	2	3-1/2
PLH100-5-AA	1	5	2-1/4	4-1/4
PLH125-3-AA	1-1/4	3	2-1/4	4
PLH125-5-AA	1-1/4	5	2-3/8	4-3/4
PLH150-3-AA	1-1/2	3	2-1/2	4-3/8
PLH150-5-AA	1-1/2	5	2-1/2	5-1/8
PLH200-3-AA	2	3	2-3/4	4-1/8
PLH200-5-AA	2	5	2-3/4	5-1/4
PLH250-3-AA	2-1/2	3	3-1/8	5-1/4
PLH250-5-AA	2-1/2	5	3-1/8	6
PLH300-3-AA	3	3	3-5/8	6-5/32
PLH300-5-AA	3	5	3-5/8	6-5/32
PLH350-3-AA	3-1/2	3	4	6-25/32
PLH350-5-AA	3-1/2	5	4	6-25/32
PLH350-7-AA	3-1/2	7	4-1/8	6-29/32
PLH400-3-AA	4	3	4-1/2	7-3/8
PLH400-5-AA	4	5	4-1/2	7-17/32
PLH500-3-AA	5	3	5	8-9/16
PLH500-5-AA	5	5	5	8-9/16
PLH500-7-AA	5	7	5-1/8	8-11/16
PLH600-5-AA	6	5	5-1/2	9-7/16

© 2011, AFL, all rights reserved. PP-3-00400, Revision 6, 3.1.2023
Specifications are subject to change without notice.

230 kV Aluminum Bolted Bus Supports

DOSSERT®

TYPE PSC-AA

Pipe Bus Support Coupler

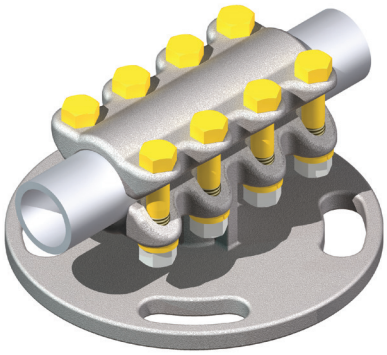

A bus support coupler for joining and supporting two tubular buses on a post type insulator. Designed for a high resistance to impact or sustained cantilever and torsional stresses. Nuts and bolts are furnished for base mounting.

Material

Aluminum Alloy

Hardware

Yellow anodized aluminum bolts, nuts, and lockwashers.

Notes

For base mounting dimensions and hardware see page 3 in the general catalog index.

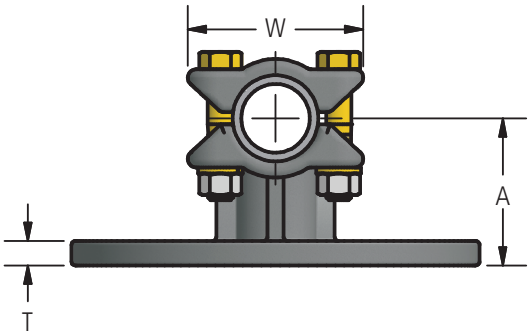

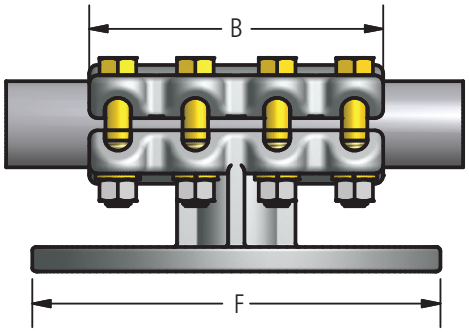

Ordering Information

CATALOG NUMBER	SPS	BOLT CIRCLE	DIMENSIONS IN INCHES					
			A	B	F	T	W	BOLT SIZE
PSC50-3-AA	1/2	3	1 3/4	5 1/4	4 1/4	3/8	2 3/4	1/2
PSC50-5-AA	1/2	5	2 1/8	5 1/4	6 1/4	3/8	2 3/4	1/2
PSC75-3-AA	3/4	3	2	5 3/4	4 1/4	3/8	2 13/16	1/2
PSC75-5-AA	3/4	5	2 1/4	5 3/4	6 1/4	3/8	2 13/16	1/2
PSC100-3-AA	1	3	2	5 3/4	4 1/4	3/8	3 1/16	1/2
PSC100-5-AA	1	5	2 1/4	5 3/4	6 1/4	3/8	3 1/16	1/2
PSC125-3-AA	1 1/4	3	2 1/4	6 1/4	4 1/4	3/8	3 13/32	1/2
PSC125-5-AA	1 1/4	5	2 3/8	6 1/4	6 1/4	3/8	3 13/32	1/2
PSC150-3-AA	1 1/2	3	2 1/2	6 1/4	4 1/4	3/8	4 5/16	1/2
PSC150-5-AA	1 1/2	5	2 1/2	6 1/4	6 1/4	3/8	4 5/16	1/2
PSC200-3-AA	2	3	2 3/4	6 3/4	4 1/4	3/8	4 1/4	1/2
PSC200-5-AA	2	5	2 3/4	6 3/4	6 1/4	3/8	4 1/4	1/2
PSC250-3-AA	2 1/2	3	3 1/8	6 3/4	4 1/4	3/8	4 5/8	1/2
PSC250-5-AA	2 1/2	5	3 1/8	6 3/4	6 1/4	3/8	4 5/8	1/2
PSC300-3-AA	3	3	3 5/8	7 1/4	4 1/4	3/8	5 1/2	5/8
PSC300-5-AA	3	5	3 5/8	7 1/4	6 1/4	3/8	5 1/2	5/8
PSC350-3-AA	3 1/2	3	4	7 1/4	4 1/4	7/16	6	5/8
PSC350-5-AA	3 1/2	5	4	7 1/4	6 1/4	7/16	6	5/8
PSC400-3-AA	4	3	4 1/2	7 1/4	4 1/4	7/16	6 1/2	5/8
PSC400-5-AA	4	5	4 1/2	7 1/4	6 1/4	7/16	6 1/2	5/8

© 2011, AFL, all rights reserved. PP-3-00403, 1.12.11
Specifications are subject to change without notice.

TYPE PSD-AA, PSD-CH-AA
Bus Support, Pipe, Slide or Tight Fit

DOSSERT®

Bolted clamp type support, for pipe-to-pipe connection, with reversible tight or rigid fit.

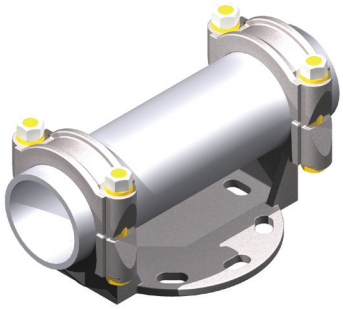

Material
Aluminum Alloy

Hardware
Yellow anodized aluminum bolts, nuts and lockwashers

Galvanized steel base mounting hardware included

Notes
- For Chatter Spring, add "-CH" to catalog number. EX: PSD400-3-CH-AA
- For Grade Five Galvanized Steel Hardware, add "-GS5" to catalog number. EX: PSD400-5-AA-GS5
- For Stainless Steel bolts, lockwashers and Everdur nuts, add "-SSHBN" to catalog number. EX: PSD400-3-AA-SSBHN
- For base mounting dimensions and hardware, see page 3 in the general catalog index of AFL's Substation Catalog or page 46 of the Swage Accessories Catalog.

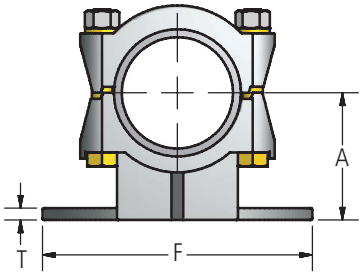

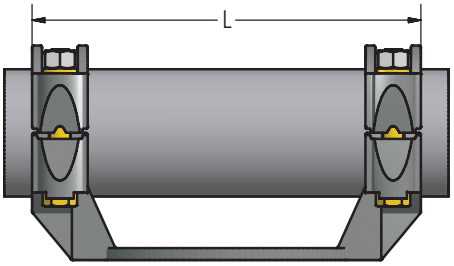

Ordering Information

CATALOG NUMBER		S.P.S.	BOLT CIRCLE	DIMENSIONS (inches)				BOLT SIZE
STANDARD	CHATTER SPRING			A	F	L	T	
PSD75-3-AA	PSD75-3-CH-AA	3/4	3	2	4-1/4	6-3/4	3/8	1/2
PSD75-5-AA	PSD75-5-CH-AA	3/4	5	2-1/4	6-1/4	9	3/8	1/2
PSD100-3-AA	PSD100-3-CH-AA	1	3	2	4-1/4	7	3/8	1/2
PSD100-5-AA	PSD100-5-CH-AA	1	5	2-1/4	6-1/4	9	3/8	1/2
PSD125-3-AA	PSD125-3-CH-AA	1-1/4	3	2-1/4	4-1/4	7-1/4	3/8	1/2
PSD125-5-AA	PSD125-5-CH-AA	1-1/4	5	2-3/8	6-1/4	9-1/2	3/8	1/2
PSD150-3-AA	PSD150-3-CH-AA	1-1/2	3	2-1/2	4-1/4	7-1/4	3/8	1/2
PSD150-5-AA	PSD150-5-CH-AA	1-1/2	5	2-1/2	6-1/4	9-1/2	3/8	1/2
PSD200-3-AA	PSD200-3-CH-AA	2	3	2-3/4	4-1/4	7-1/4	3/8	1/2
PSD200-5-AA	PSD200-5-CH-AA	2	5	2-3/4	6-1/4	9-1/2	3/8	1/2
PSD250-3-AA	PSD250-3-CH-AA	2-1/2	3	3-1/8	4-1/4	7-3/4	3/8	1/2
PSD250-5-AA	PSD250-5-CH-AA	2-1/2	5	3-1/8	6-1/4	10	3/8	1/2
PSD300-3-AA	PSD300-3-CH-AA	3	3	3-5/8	4-1/4	7-3/4	3/8	5/8
PSD300-5-AA	PSD300-5-CH-AA	3	5	3-5/8	6-1/4	10	3/8	5/8
PSD300-7-AA	PSD300-7-CH-AA	3	7	3-5/8	8-1/2	12-1/4	1/2	5/8
PSD350-3-AA	PSD350-3-CH-AA	3-1/2	3	4	4-1/4	7-3/4	3/8	5/8
PSD350-5-AA	PSD350-5-CH-AA	3-1/2	5	4	6-1/4	10	3/8	5/8
PSD350-7-AA	PSD350-7-CH-AA	3-1/2	7	4	8-1/2	12	1/2	5/8

continued →

© 2011, AFL, all rights reserved. PP-3-00405 , Revision 3, 8.26.2024
Specifications are subject to change without notice.

AFL
AFLglobal.com
1 (800) 890-8878

TYPE PSD-AA, PSD-CH-AA
Bus Support, Pipe, Slide or Tight Fit

DOSSERT®

Ordering Information

CATALOG NUMBER		S.P.S.	BOLT CIRCLE	DIMENSIONS (inches)				BOLT SIZE
STANDARD	CHATTER SPRING			A	F	L	T	
PSD400-3-AA	PSD400-3-CH-AA	4	3	4-1/2	4-1/4	7-3/4	1/2	5/8
PSD400-5-AA	PSD400-5-CH-AA	4	5	4-1/2	6-1/4	10	1/2	5/8
PSD400-7-AA	PSD400-7-CH-AA	4	7	4-1/2	8-1/2	12-1/4	1/2	5/8
PSD450-3-AA	PSD450-3-CH-AA	4-1/2	3	4-3/4	4-1/4	8	1/2	5/8
PSD450-5-AA	PSD450-5-CH-AA	4-1/2	5	4-3/4	6-1/4	10	1/2	5/8
PSD450-7-AA	PSD450-7-CH-AA	4-1/2	7	4-3/4	8-1/2	12-3/4	5/8	5/8
PSD500-3-AA	PSD500-3-CH-AA	5	3	5	4-1/4	8	1/2	5/8
PSD500-5-AA	PSD500-5-CH-AA	5	5	5	6-1/4	10	1/2	5/8
PSD500-7-AA	PSD500-7-CH-AA	5	7	5	8-1/2	12-3/4	1/2	5/8
PSD600-3-AA	PSD600-3-CH-AA	6	3	5-1/2	4-1/4	8-1/4	1/2	5/8
PSD600-5-AA	PSD600-5-CH-AA	6	5	5-1/2	6-1/4	10-1/2	1/2	5/8
PSD600-7-AA	PSD600-7-CH-AA	6	7	5-1/2	8-1/2	12-3/4	1/2	5/8
PSD800-5-AA	PSD800-5-CH-AA	8	5	6-7/8	6-1/4	10-1/2	1/2	5/8
PSD800-7-AA	PSD800-7-CH-AA	8	7	6-7/8	8-1/2	12-3/4	1/2	5/8

© 2011, AFL, all rights reserved. PP-3-00405 , Revision 3, 8.26.2024
Specifications are subject to change without notice.

AFL | AFLglobal.com
1 (800) 890-8878

230 kV Aluminum Bolted Bus Supports

DOSSERT®

TYPE PSDC-AA

Bus Support, Pipe, Slide or Tight Fit

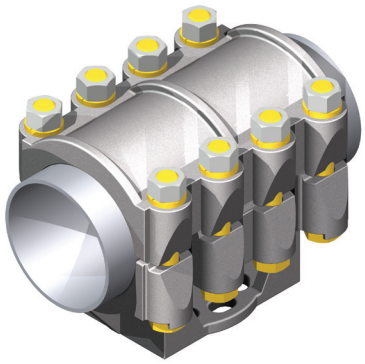

A bus support coupler for joining and supporting two tubular buses on a post type insulator. Designed for high resistance to impact and cantilever and torsional stresses.

Material

Aluminum Alloy

Hardware

Yellow anodized aluminum nuts, bolts and lockwashers.
Galvanized steel mounting hardware included.

Notes

For base mounting dimensions and hardware see page 3 in the general catalog index.

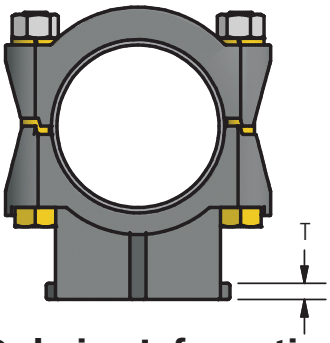

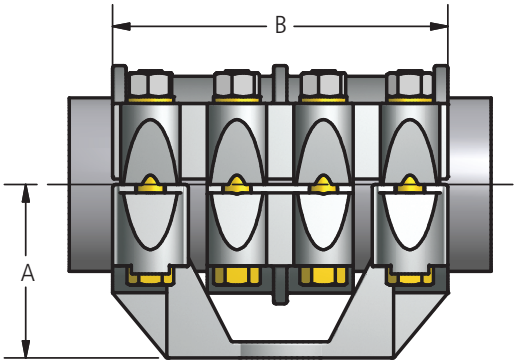

Ordering Information

CATALOG NUMBER	SPS	BOLT CIRCLE	DIMENSIONS IN INCHES			
			A	B	T	BOLT SIZE
PSDC75-3-AA	3/4	3	2	6 3/4	3/8	1/2
PSDC75-5-AA	3/4	5	2 1/4	9	3/8	1/2
PSDC100-3-AA	1	3	2	7	3/8	1/2
PSDC100-5-AA	1	5	2 1/4	7 1/4	3/8	1/2
PSDC125-3-AA	1 1/4	3	2 1/4	7 1/4	3/8	1/2
PSDC125-5-AA	1 1/4	5	2 3/8	9 1/2	3/8	1/2
PSDC150-3-AA	1 1/2	3	2 1/2	7 1/4	3/8	1/2
PSDC150-5-AA	1 1/2	5	2 1/2	9 1/2	3/8	1/2
PSDC200-3-AA	2	3	2 3/4	7 1/4	3/8	1/2
PSDC200-5-AA	2	5	2 3/4	9 1/2	3/8	1/2
PSDC250-3-AA	2 1/2	3	3 1/8	7 3/4	3/8	1/2
PSDC250-5-AA	2 1/2	5	3 1/8	10	3/8	1/2
PSDC300-3-AA	3	3	3 5/8	7 3/4	3/8	5/8
PSDC300-5-AA	3	5	3 5/8	10	3/8	5/8
PSDC300-7-AA	3	7	3 5/8	12 1/4	1/2	5/8
PSDC350-3-AA	3 1/2	3	4	7 3/4	3/8	5/8
PSDC350-5-AA	3 1/2	5	4	10	3/8	5/8
PSDC350-7-AA	3 1/2	7	4	12 1/4	1/2	5/8
PSDC400-3-AA	4	3	4 1/2	7 3/4	1/2	5/8
PSDC400-5-AA	4	5	4 1/2	10	1/2	5/8
PSDC400-7-AA	4	7	4 1/2	12 1/4	1/2	5/8
PSDC500-3-AA	5	3	5	8 1/4	1/2	5/8
PSDC500-5-AA	5	5	5	10 1/2	1/2	5/8
PSDC500-7-AA	5	7	5	12 3/4	5/8	5/8
PSDC600-3-AA	6	3	5 1/2	7 3/4	1/2	5/8
PSDC600-5-AA	6	5	5 1/2	10	1/2	5/8
PSDC600-7-AA	6	7	5 1/2	12 1/4	1/2	5/8

© 2011, AFL, all rights reserved. PP-3-00406, 1.12.11
Specifications are subject to change without notice.

230 kV Aluminum Bolted Bus Supports

DOSSERT®

TYPE PSDCS-AA

Bus Support, Pipe, Slide or Tight Fit

The bus support is supplied with chatter springs to reduce chatter. The support can be used as a sliding support or fixed support.

Material

Aluminum Alloy

Hardware

Yellow anodized aluminum nuts, bolts and lockwashers.
Galvanized Steel mounting hardware included.

Notes

For base mounting dimensions and hardware see page 3 in the general catalog index.

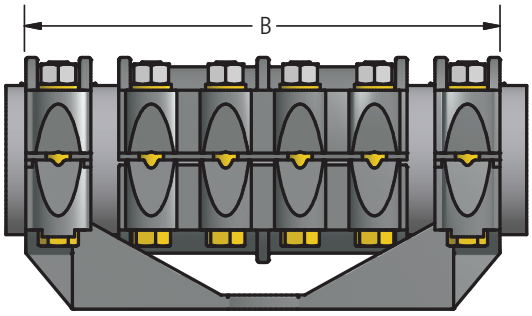

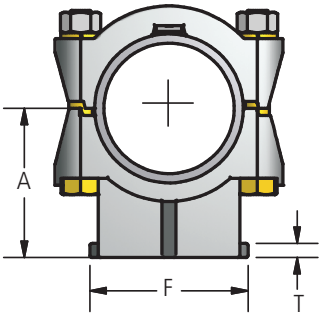

Ordering Information

CATALOG NUMBER	SPS	BOLT CIRCLE	DIMENSIONS IN INCHES				
			A	B	F	T	BOLT SIZE
PSDCS75-3-AA	3/4	3	2	6 3/4	4 1/4	3/8	1/2
PSDCS75-5-AA	3/4	5	2 1/4	9	6 1/4	3/8	1/2
PSDCS100-3-AA	1	3	2	7	4 1/4	3/8	1/2
PSDCS100-5-AA	1	5	2 1/4	7 1/4	6 1/4	3/8	1/2
PSDCS125-3-AA	1 1/4	3	2 1/4	7 1/4	4 1/4	3/8	1/2
PSDCS125-5-AA	1 1/4	5	2 3/8	9 1/2	6 1/4	3/8	1/2
PSDCS150-3-AA	1 1/2	3	2 1/2	7 1/4	4 1/4	3/8	1/2
PSDCS150-5-AA	1 1/2	5	2 1/2	9 1/2	6 1/4	3/8	1/2
PSDCS200-3-AA	2	3	2 3/4	7 1/4	4 1/4	3/8	1/2
PSDCS200-5-AA	2	5	2 3/4	9 1/2	6 1/4	3/8	1/2
PSDCS250-3-AA	2 1/2	3	3 1/8	7 3/4	4 1/4	3/8	1/2
PSDCS250-5-AA	2 1/2	5	3 1/8	10	6 1/4	3/8	1/2
PSDCS300-3-AA	3	3	3 5/8	7 3/4	4 1/4	3/8	5/8
PSDCS300-5-AA	3	5	3 5/8	10	6 1/4	3/8	5/8
PSDCS300-7-AA	3	7	3 5/8	12 1/4	8 1/2	1/2	5/8
PSDCS350-3-AA	3 1/2	3	4	7 3/4	4 1/4	3/8	5/8
PSDCS350-5-AA	3 1/2	5	4	10	6 1/4	3/8	5/8
PSDCS350-7-AA	3 1/2	7	4	12 1/4	8 1/2	1/2	5/8
PSDCS400-3-AA	4	3	4 1/2	7 3/4	4 1/4	1/2	5/8
PSDCS400-5-AA	4	5	4 1/2	10	6 1/4	1/2	5/8
PSDCS400-7-AA	4	7	4 1/2	12 1/4	8 1/2	1/2	5/8
PSDCS500-3-AA	5	3	5	8 1/4	4 1/4	1/2	5/8
PSDCS500-5-AA	5	5	5	10 1/2	6 1/4	1/2	5/8
PSDCS500-7-AA	5	7	5	12 3/4	8 1/2	5/8	5/8
PSDCS600-3-AA	6	3	5 1/2	7 3/4	4 1/4	1/2	5/8
PSDCS600-5-AA	6	5	5 1/2	10	6 1/4	1/2	5/8
PSDCS600-7-AA	6	7	5 1/2	12 1/4	8 1/2	1/2	5/8

© 2011, AFL, all rights reserved. PP-3-00407, Revision 1, 7.23.13
Specifications are subject to change without notice.

230 kV Aluminum Bolted Bus Supports

DOSSERT®

TYPE PSG-AA

Cable, Bus Support

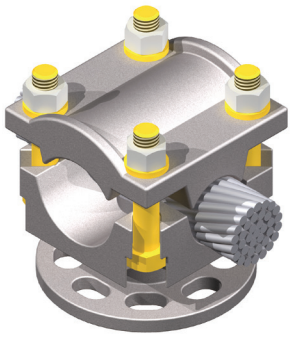

Material

Aluminum Alloy

Hardware

Yellow anodized aluminum nuts, bolts, and lockwashers.
Galvanized steel base mounting hardware is included.

Notes

For base mounting dimensions and hardware see page 3 in the general catalog index.

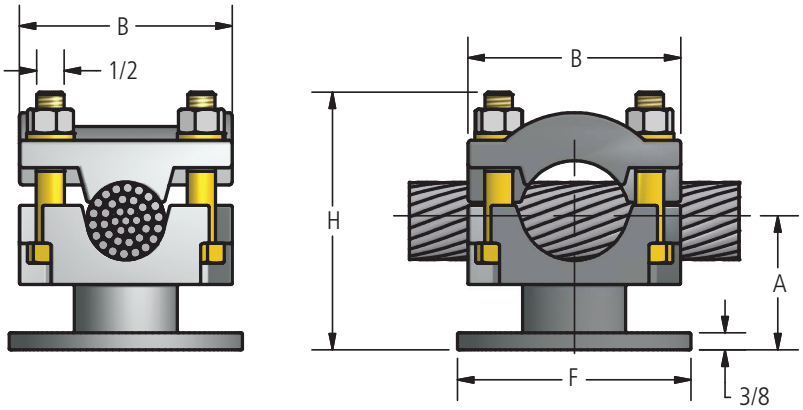

Ordering Information

CATALOG NUMBER	AAC CABLE RANGE		BUS RANGE (OD) IN INCHES		BOLT CIRCLE	DIMENSIONS IN INCHES				CANTILEVER FORCE LBS	
	MIN.	MAX.	MIN.	MAX.		A	B	F	H	ALLOWABLE	ULTIMATE
PSG81-3-AA	#4	500MCM	7/16	1 5/16	3	1 9/16	2 3/8	4 1/4	2 3/8	-	-
PSG131-3-AA	3/0STR	1250MCM	7/16	1 5/16	3	2 1/8	3 1/8	4 1/4	3 11/16	2310	3340
PSG131-5-AA	3/0STR	1250MCM	7/16	1 5/16	5	2 1/8	3 1/8	6 1/4	3 11/16	4490	6480
PSG199-3-AA	750MCM	2870MCM	1	2	3	2 5/8	3 7/8	4 1/4	4 5/8	2410	3480
PSG199-5-AA	750MCM	2870MCM	1	2	5	2 5/8	3 7/8	6 1/4	4 5/8	4720	6820
PSG199-7-AA	750MCM	2870MCM	1	2	7	2 5/8	3 7/8	8 1/2	4 5/8	-	-

© 2011, AFL, all rights reserved. PP-3-00409, 1.12.11
Specifications are subject to change without notice.

230 kV Aluminum Bolted Bus Supports

DOSSERT®

TYPE PSRE-AA

Low Mounting Variable Bus Support for Cable/Pipe

A cost effective low mounting variable bus support clamp. The wide range of conductor sizes accommodated by each clamp size minimizes the number of clamps to cover a given range of bus sizes.

Material

Aluminum Alloy

Hardware

Yellow anodized aluminum nuts, bolts, and lockwashers.
Galvanized steel base mounting hardware is included.

Notes

For base mounting dimensions and hardware see page 3 in the general catalog index.

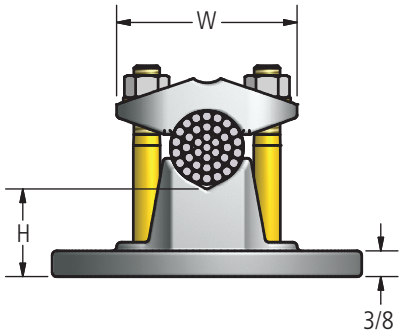

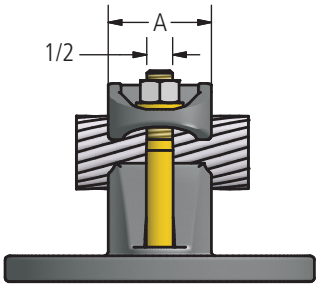

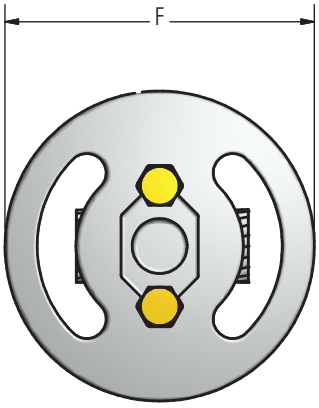

Ordering Information

CATALOG NUMBER	CONDUCTOR RANGE		SPS/EHPS		DIAMETER		BOLT CIRCLE	DIMENSIONS IN INCHES			
	MIN	MAX	MIN	MAX	MIN	MAX		A	F	H	W
PSRE75-3-AA	#2 STR	800 MCM	1/2	3/4	1/4	1 1/16	3	1 1/2	4 1/4	1	2 13/16
PSRE75-5-AA	#2 STR	800 MCM	1/2	3/4	1/4	1 1/16	5	1 1/2	6 1/4	1	2 13/16
PSRE125-3-AA	556.5 MCM	2000 MCM	3/4	1 1/4	13/16	1 11/16	3	1 3/4	4 1/4	1	3 7/16
PSRE125-5-AA	556.5 MCM	2000 MCM	3/4	1 1/4	13/16	1 11/16	5	1 3/4	6 1/4	1	3 7/16
PSRE159-3-AA	1/0 STR	1590 MCM	1/2	1	3/8	1 5/11	3	1 5/8	4 1/4	1 5/8	2 3/4
PSRE159-5-AA	1/0 STR	1590 MCM	1/2	1	3/8	1 5/11	5	1 5/8	6 1/4	1 5/8	2 3/4
PSRE159-7-AA	1/0 STR	1590 MCM	1/2	1	3/8	1 5/11	7	1 5/8	8 1/2	1 5/8	2 3/4
PSRE200-3-AA	2000 MCM	3500 MCM	1 1/4	2	1 5/8	2 3/8	3	1 3/4	4 1/4	1	4 1/8
PSRE200-5-AA	2000 MCM	3500 MCM	1 1/4	2	1 5/8	2 3/8	5	1 3/4	6 1/4	1	4 1/8

© 2011, AFL, all rights reserved. PP-3-00412, 1.12.11
Specifications are subject to change without notice.

DOSSERT®

TYPE PSS-AA, PSS-CH-AA

Pipe Bus Support Slide or Tight Fit

A high strength aluminum support for securing a tubular bus to a post or pedestal type insulator. Designed with a high resistance to impact and sustained cantilever and torsion stresses. Entire unit is non-magnetic and corrosion resistant. Nuts and bolts are furnished for base mounting or slotted mouting. Reversible cap permits rigid or slip fit on conductor.

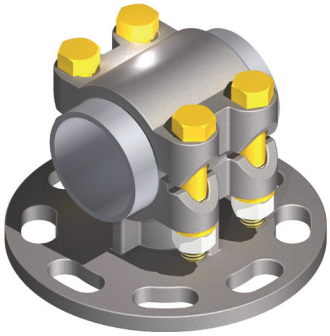

PSS-AA

Material

Aluminum Alloy

Hardware

Yellow anodized aluminum bolts, nuts, and lockwashers.
Galvanized steel base mounting hardware is included.

Notes

For base mounting dimensions and hardware see page 3 in the general catalog index.

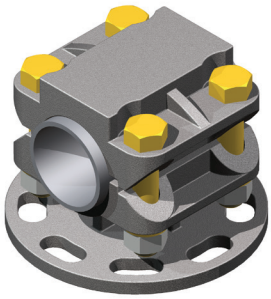

PSS-CH-AA

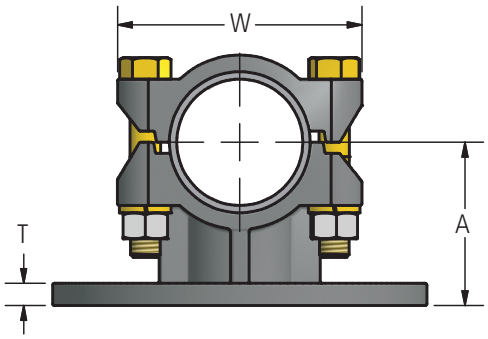

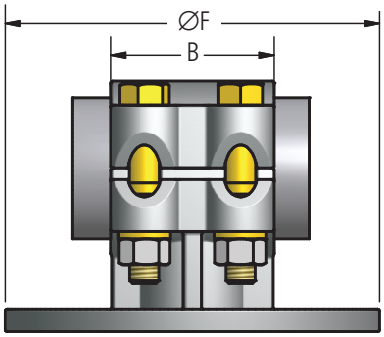

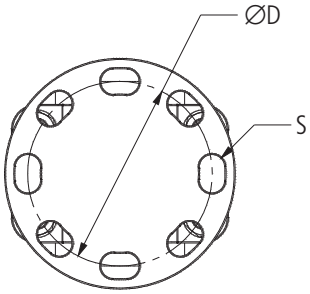

FIG. 1

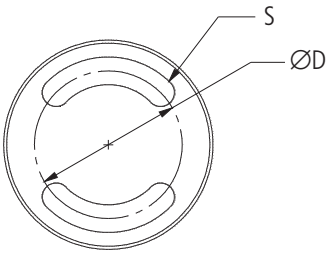

FIG. 2

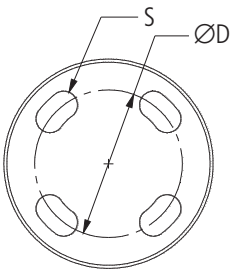

FIG. 3

© 2011, AFL, all rights reserved. PP-3-00413, Revision 4, 5.9.23
Specifications are subject to change without notice.

DOSSERT®

TYPE PSS-AA, PSS-CH-AA

Pipe Bus Support Slide or Tight Fit

Ordering Information

CATALOG NUMBER		SPS	FIG. NO.	DIMENSIONS IN INCHES							BOLT SIZE
STANDARD	WITH CHATTER SPRING			A	B	D	F	S	T	W	
PSS50-3-AA	PSS50-3-CH-AA	1/2	2	1.75	2.06	3.00	4.25	0.50	0.38	2.41	1/2
PSS50-5-AA	PSS50-5-CH-AA	1/2	1	2.13	2.50	5.00	6.25	0.69	0.38	2.63	1/2
PSS75-3-AA	PSS75-3-CH-AA	3/4	1	2.00	2.75	3.00	4.25	0.56	0.38	2.81	1/2
PSS75-5-AA	PSS75-5-CH-AA	3/4	1	2.25	2.75	5.00	6.25	0.69	0.38	2.81	1/2
PSS100-3-AA	PSS100-3-CH-AA	1	1	2.00	2.75	3.00	4.25	0.56	0.38	3.06	1/2
PSS100-5-AA	PSS100-5-CH-AA	1	1	2.25	2.75	5.00	6.25	0.69	0.38	3.06	1/2
PSS125-3-AA	PSS125-3-CH-AA	1 1/4	3	2.25	3.00	3.00	4.25	0.56	0.38	3.75	1/2
PSS125-5-AA	PSS125-5-CH-AA	1 1/4	1	2.38	3.00	5.00	6.25	0.69	0.38	3.41	1/2
PSS150-3-AA	PSS150-3-CH-AA	1 1/2	1	2.50	3.00	3.00	4.25	0.56	0.38	3.66	1/2
PSS150-5-AA	PSS150-5-CH-AA	1 1/2	1	2.50	3.00	5.00	6.25	0.69	0.38	3.66	1/2
PSS200-3-AA	PSS200-3-CH-AA	2	1	2.75	3.25	3.00	4.25	0.56	0.38	4.13	1/2
PSS200-5-AA	PSS200-5-CH-AA	2	1	2.75	3.25	5.00	6.25	0.69	0.38	4.13	1/2
PSS250-3-AA	PSS250-3-CH-AA	2 1/2	1	3.13	3.25	3.00	4.25	0.56	0.38	4.63	1/2
PSS250-5-AA	PSS250-5-CH-AA	2 1/2	1	3.13	3.25	5.00	6.25	0.69	0.38	4.63	1/2
PSS300-3-AA	PSS300-3-CH-AA	3	1	3.63	3.75	3.00	4.25	0.56	0.44	4.63	5/8
PSS300-5-AA	PSS300-5-CH-AA	3	1	3.63	3.75	5.00	6.25	0.69	0.44	4.63	5/8
PSS350-3-AA	PSS350-3-CH-AA	3 1/2	1	4.00	3.75	3.00	4.25	0.56	0.44	6.13	5/8
PSS350-5-AA	PSS350-5-CH-AA	3 1/2	1	4.00	3.75	5.00	6.25	0.69	0.44	6.13	5/8
PSS350-7-AA	PSS350-7-CH-AA	3 1/2	1	4.00	3.75	7.00	8.25	0.81	0.50	6.13	3/4
PSS400-3-AA	PSS400-3-CH-AA	4	3	4.50	3.75	3.00	4.25	0.56	0.38	6.63	5/8
PSS400-5-AA	PSS400-5-CH-AA	4	1	4.50	3.75	5.00	6.25	0.69	0.50	7.13	5/8
PSS400-7-AA	PSS400-7-CH-AA	4	1	4.50	3.75	7.00	8.25	0.81	0.50	6.63	3/4
PSS400-5-4.75H-AA	PSS400-5-4.75H-CH-AA	4	1	4.75	3.75	5.00	6.25	0.69	0.44	6.63	5/8
PSS400-5-5.0H-AA	PSS400-5-5.0H-CH-AA	4	1	5.00	3.75	5.00	6.25	0.69	0.44	6.63	5/8
PSS450-3-AA	PSS450-3-CH-AA	4 1/2	1	4.75	3.75	3.00	4.25	0.56	0.44	7.13	5/8
PSS450-5-AA	PSS450-5-CH-AA	4 1/2	1	4.75	3.75	5.00	6.25	0.69	0.44	7.13	5/8
PSS500-3-AA	PSS500-3-CH-AA	5	1	5.00	3.75	3.00	4.25	0.56	0.38	7.69	5/8
PSS500-5-AA	PSS500-5-CH-AA	5	1	5.00	3.75	5.00	6.25	0.69	0.50	7.69	5/8
PSS500-7-AA	PSS500-7-CH-AA	5	1	5.00	3.75	7.00	8.50	0.81	0.50	7.69	5/8
PSS600-5-AA	PSS600-5-CH-AA	6	1	6.00	4.00	5.00	6.25	0.69	0.50	8.75	5/8

© 2011, AFL, all rights reserved. PP-3-00413, Revision 4, 5.9.23
Specifications are subject to change without notice.

DOSSERT®

TYPE PSSR-AA, PSSR-CH-AA

Tubular Bus Support

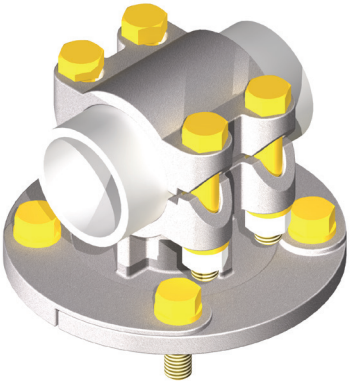

An aluminum support for securing a tubular bus to a post or pedestal type insulator. Fully adjustable to any angle within a complete circle (360°) with the advantage of four bolts maintaining angular setting as well as mounting pressure. Reversible cap permits rigid or slip fit on conductor. Unless otherwise specified cap screws are supplied.

Material

Aluminum Alloy

Hardware

Yellow anodized aluminum bolts, nuts, and lockwashers.
Galvanized steel base mounting hardware is included.

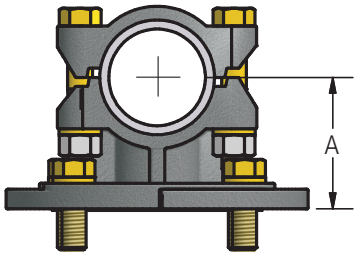

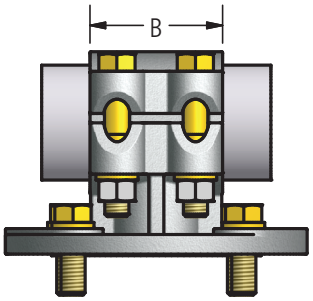

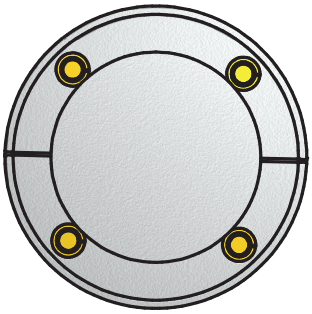

Ordering Information

CATALOG NUMBER		SPS	BOLT CIRCLE	DIMENSIONS IN INCHES			
				A	B	BOLT SIZE	
STANDARD	WITH CHATTER SPRING					CAP	BASE
PSSR50-3-AA	PSSR50-3-CH-AA	1/2	3	1-3/4	2-1/8	3/8	1/2
PSSR50-5-AA	PSSR50-5-CH-AA	1/2	5	2-1/8	2-1/8	3/8	5/8
PSSR75-3-AA	PSSR75-3-CH-AA	3/4	3	2	2-1/8	3/8	1/2
PSSR75-5-AA	PSSR75-5-CH-AA	3/4	5	2-1/4	2-1/8	3/8	5/8
PSSR100-3-AA	PSSR100-3-CH-AA	1	3	2	2-1/8	3/8	1/2
PSSR100-5-AA	PSSR100-5-CH-AA	1	5	2-1/4	2-1/8	3/8	5/8
PSSR125-3-AA	PSSR125-3-CH-AA	1-1/4	3	2-1/4	2-1/4	1/2	1/2
PSSR125-5-AA	PSSR125-5-CH-AA	1-1/4	5	2-3/8	2-1/4	1/2	5/8
PSSR150-3-AA	PSSR150-3-CH-AA	1-1/2	3	2-1/2	2-1/2	1/2	1/2
PSSR150-5-AA	PSSR150-5-CH-AA	1-1/2	5	2-1/2	2-1/2	1/2	5/8
PSSR200-3-AA	PSSR200-3-CH-AA	2	3	2-3/4	2-3/4	1/2	1/2
PSSR200-5-AA	PSSR200-5-CH-AA	2	5	2-3/4	2-3/4	1/2	5/8
PSSR250-3-AA	PSSR250-3-CH-AA	2-1/2	3	3-1/8	3	1/2	1/2
PSSR250-5-AA	PSSR250-5-CH-AA	2-1/2	5	3-1/8	3	1/2	5/8
PSSR300-3-AA	PSSR300-3-CH-AA	3	3	3-5/8	3-1/4	5/8	1/2
PSSR300-5-AA	PSSR300-5-CH-AA	3	5	3-5/8	3-1/4	5/8	5/8
PSSR350-3-AA	PSSR350-3-CH-AA	3-1/2	3	4	3-1/4	5/8	1/2
PSSR350-5-AA	PSSR350-5-CH-AA	3-1/2	5	4	3-1/4	5/8	5/8
PSSR400-3-AA	PSSR400-3-CH-AA	4	3	4-1/2	3-1/4	5/8	1/2
PSSR400-5-AA	PSSR400-5-CH-AA	4	5	4-1/2	3-1/4	5/8	5/8

© 2011, AFL, all rights reserved. PP-3-00414, Revision 1, 7.23.13
Specifications are subject to change without notice.

230 kV Aluminum Bolted Bus Supports

DOSSERT®

TYPE PSU-AA

Pipe or Cable Bus Support

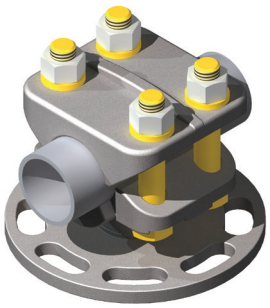

Material

Aluminum Alloy

Hardware

Aluminum nuts, bolts, and lockwashers.
Galvanized steel base mounting hardware is included.

Notes

For base mounting dimensions and hardware see page 3 in the general catalog index.

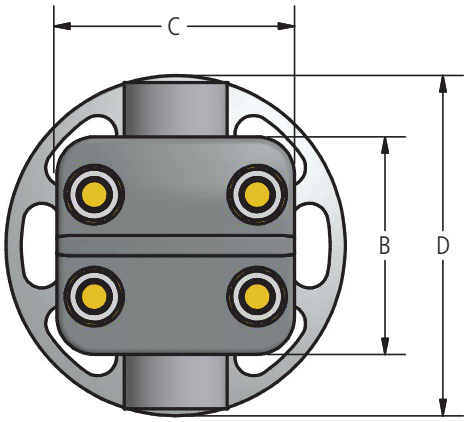

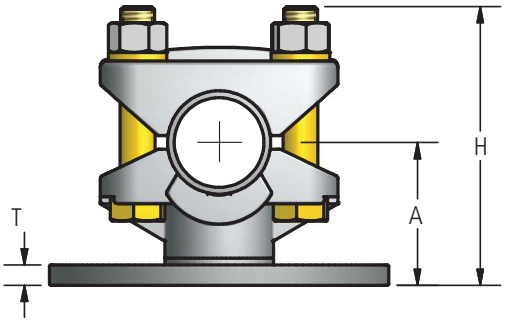

Ordering Information

CATALOG NUMBER	SPS		CABLE RANGE AAC		CABLE RANGE ACSR		BOLT CIRCLE	DIMENSIONS IN INCHES						
	MIN	MAX	MIN	MAX	MIN	MAX		A	B	C	D	H	T	BOLT SIZE
PSU50-3-AA	1/8	1/2	6STR	500MCM	6	336.4	3	2-1/8	3	3-1/8	4-1/4	3-1/2	3/8	1/2
PSU50-5-AA	1/8	1/2	6STR	500MCM	6	336.4	5	2-1/8	3	3-1/8	6-1/4	3-1/2	3/8	1/2
PSU100-3-AA	1/4	1	4/0	1250MCM	4/0	1033.5	3	2-1/4	3-1/2	3-1/2	4-1/4	4-1/4	3/8	1/2
PSU100-5-AA	1/4	1	4/0	1250MCM	4/0	1033.5	5	2-1/4	3-1/2	3-1/2	6-1/4	4-1/4	3/8	1/2
PSU150-3-AA	3/4	1-1/2	850MCM	2500MCM	715.5	2515	3	2-5/8	4	4-3/8	4-1/4	4-3/4	3/8	5/8
PSU150-5-AA	3/4	1-1/2	850MCM	2500MCM	715.5	2515	5	2-5/8	4	4-3/8	6-1/4	4-3/4	3/8	5/8
PSU150-7-AA	3/4	1-1/2	850MCM	2500MCM	715.5	2515	7	2-5/8	4	4-3/8	8-1/2	4-7/8	1/2	5/8
PSU200-3-AA	1-1/4	2	2500MCM	3500MCM	2034	2870	3	2-3/4	4	4-3/8	4-1/4	4-7/8	3/8	5/8
PSU200-5-AA	1-1/4	2	2500MCM	3500MCM	2034	2870	5	2-3/4	4	4-3/8	6-1/4	4-7/8	3/8	5/8

© 2011, AFL, all rights reserved. PP-3-00417, Revision 2, 2.25.19
Specifications are subject to change without notice.

DOSSERT®

TYPE PSV-AA

Vertical Pipe Bus Support

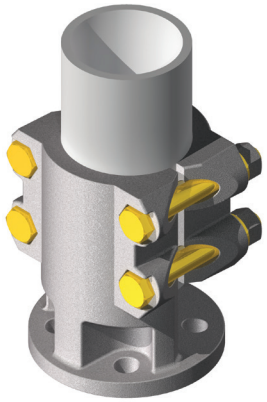

Material

Aluminum Alloy

Hardware

Yellow anodized aluminum nuts, bolts and lockwashers.
Galvanized steel base mounting hardware is included.

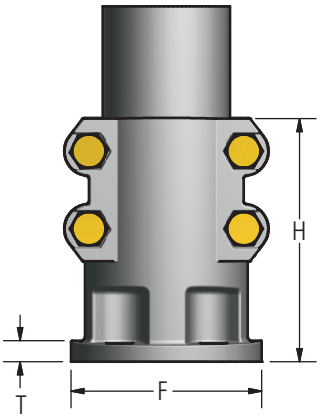

Ordering Information

CATALOG NUMBERS	SPS	BOLT CIRCLE	DIMENSIONS IN INCHES			CANTILEVER FORCE*	
			F	H	T	ALLOWABLE	ULTIMATE
PSV100-3-AA	1	3	4 1/4	4 3/8	3/8	1920	2750
PSV150-3-AA	1 1/2	3	4 1/4	4 3/4	3/8	2000	2880
PSV150-5-AA	1 1/2	5	6 1/4	4 3/4	3/8	4130	5950
PSV200-3-AA	2	3	4 1/4	5 1/2	3/8	2080	2990
PSV200-5-AA	2	5	6 1/4	4 3/4	3/8	4430	6380
PSV250-3-AA	2 1/2	3	4 1/4	5 1/2	13/32	2160	3110
PSV250-5-AA	2 1/2	5	6 1/4	4 3/4	13/32	4590	6610
PSV300-3-AA	3	3	4 1/4	5 5/16	13/32	2240	3230
PSV300-5-AA	3	5	6 1/4	5 5/16	13/32	4870	7010
PSV350-3-AA	3 1/2	3	4 1/4	4 7/8	13/32	2720	3920
PSV350-5-AA	3 1/2	5	6 1/4	5 1/2	13/32	5030	7240
PSV400-3-AA	4	3	4 1/4	4 7/8	13/32	2820	4060
PSV400-5-AA	4	5	6 1/4	5 1/2	13/32	5350	7700

* -Cantilver force is applied at a point on the bus location 2 ft away from the bus support.

© 2011, AFL, all rights reserved. PP-3-00419, 1.12.11
Specifications are subject to change without notice.

230 kV Aluminum Bolted Bus Supports

DOSSERT®

TYPE SAH-AA, SHH-AA

Horizontal Bus Support For Flat Bus Bars

A horizontal bus support for supporting one or more flat bus bars in a horizontal position. The following supports do not include spacers. The Double Group Type includes a single wide spacer only.

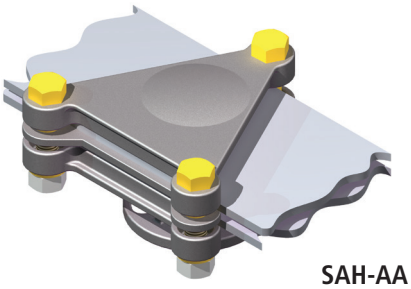

SAH-AA

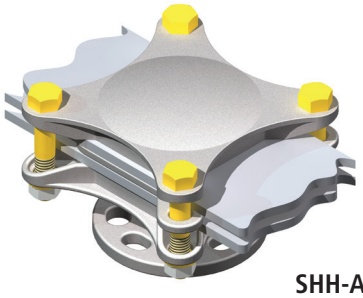

SHH-AA

Material

Aluminum Alloy

Hardware

Yellow anodized aluminum nuts, bolts, and lockwashers.
Galvanized steel base mounting hardware is included.

Note

For more than 2 bars supported; follow the bolt circle number with number of bars to be supported. For example for a 4 inch width bus and a 5 inch bolt circle with 4 bars to be supported order: SAH4-5-4-AA

For bar spacing greater than 1/4" see page 11 for spacers.

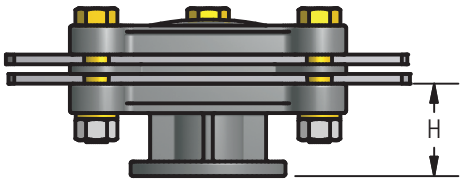

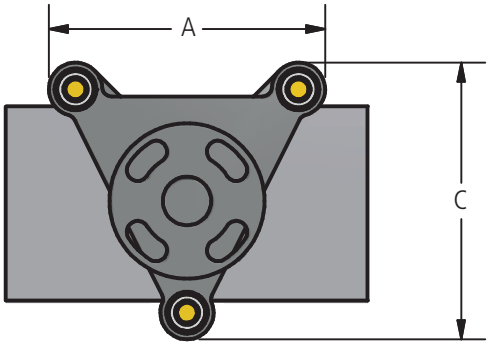

Ordering Information

CATALOG NUMBER				WIDTH OF BUS	BOLT CIRCLE	DIMENSIONS IN INCHES		
SAH SERIES	DOUBLE SPACED	SHH SERIES	DOUBLE SPACED			A	C	H
SAH2-3-AA	SAHD2-3-AA	SHH2-3-AA	SHHD2-3-AA	2	3	3 5/16	3 5/16	2 1/8
SAH2-5-AA	SAHD2-5-AA	SHH2-5-AA	SHHD2-5-AA	2	5	3 5/16	3 5/16	2 3/8
SAH3-3-AA	SAHD3-3-AA	SHH3-3-AA	SHHD3-3-AA	3	3	3 5/16	4 5/16	2 1/8
SAH3-5-AA	SAHD3-5-AA	SHH3-5-AA	SHHD3-5-AA	3	5	3 5/16	4 5/16	2 3/8
SAH4-3-AA	SAHD4-8-AA	SHH4-3-AA	SHHD4-8-AA	4	3	4 3/4	5 3/4	2 1/4
SAH4-5-AA	SAHD4-5-AA	SHH4-5-AA	SHHD4-5-AA	4	5	4 3/4	5 3/4	2 1/2
SAH5-3-AA	SAHD5-3-AA	SHH5-3-AA	SHHD5-3-AA	5	3	5 3/4	6 3/4	2 3/8
SAH5-5-AA	SAHD5-5-AA	SHH5-5-AA	SHHD5-5-AA	5	5	5 3/4	6 3/4	2 5/8
SAH6-3-AA	SAHD6-3-AA	SHH6-3-AA	SHHD6-3-AA	6	3	7 1/8	8 1/8	2 3/8
SAH6-5-AA	SAHD6-5-AA	SHH6-5-AA	SHHD6-5-AA	6	5	7 1/8	8 1/8	2 5/8

© 2011, AFL, all rights reserved. PP-3-00440, 1.12.11
Specifications are subject to change without notice.

DOSSERT®

TYPE SAV-AA, SHV-AA

Vertical Bus Support Clamps

A vertical support clamp for supporting one or more flat bus bars in a vertical or upright position.

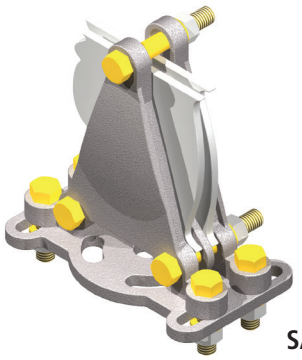

SAV-AA

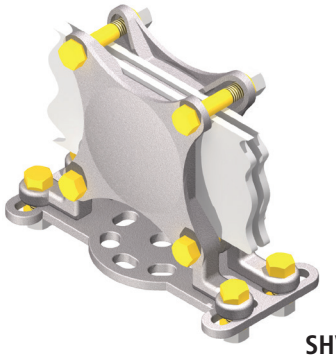

SHV-AA

Material

Aluminum Alloy

Hardware

Yellow anodized aluminum bolts, nuts, and lockwashers.
Galvanized steel base mounting hardware is included.

Note

Double group supports include a single wide spacer only. For more than 2 bars supported; follow the bolt circle number with number of bars to be supported. For example, for a 4 inch width bus and a 5 inch bolt circle with 4 bars to be supportred order: EX: SAV-4-5-4-AA.

For base mounting dimensions and hardware see page 3 in the general catalog index.

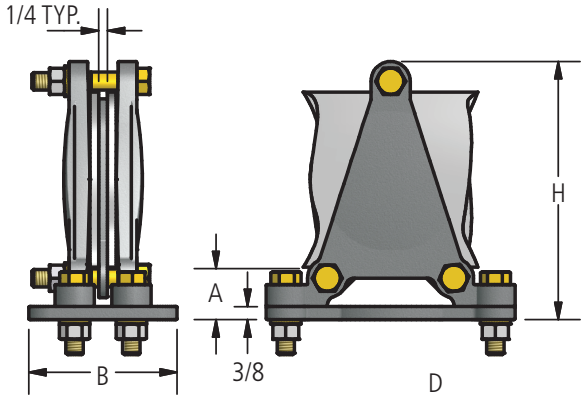

SAV-AA

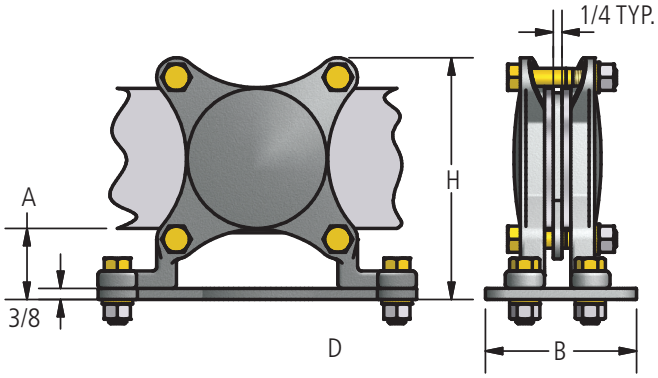

SHV-AA

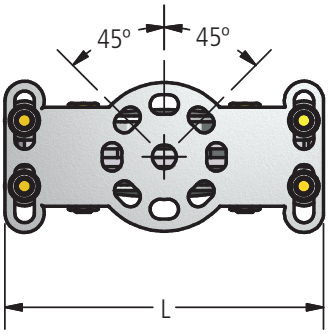

© 2011, AFL, all rights reserved. PP-3-00442, 1.12.11
Specifications are subject to change without notice.

230 kV Aluminum Bolted Bus Supports

DOSSERT®

TYPE SAV-AA, SHV-AA

Vertical Bus Support Clamps

Ordering Information

CATALOG NUMBER		BOLT CIRCLE	DIMENSIONS IN INCHES					BOLT SIZE
SAV-AA SERIES	SHV-AA SERIES		WIDTH OF BARS	B	A	H	L	
SAV2-3-AA	SHV2-3-AA	3	2	4 1/4	1 3/4	4 7/16	7 1/8	3/8
SAV2-5-AA	SHV2-5-AA	5	2	6 1/4	1 3/4	4 7/16	8 1/8	3/8
SAV3-3-AA	SHV3-3-AA	3	3	4 1/4	1 3/4	5 7/16	7 1/8	3/8
SAV3-5-AA	SHV3-5-AA	5	3	6 1/4	1 3/4	5 7/16	8 1/8	3/8
SAV4-3-AA	SHV4-3-AA	3	4	4 1/4	1 7/8	6 7/8	7 1/8	1/2
SAV4-5-AA	SHV4-5-AA	5	4	6 1/4	1 7/8	6 7/8	8 1/8	1/2
SAV5-3-AA	SHV5-3-AA	3	5	4 1/4	1 7/8	7 7/8	7 1/8	1/2
SAV5-5-AA	SHV5-5-AA	5	5	6 1/4	1 7/8	7 7/8	8 1/8	1/2
SAV6-3-AA	SHV6-3-AA	3	6	4 1/4	1 7/8	8 7/8	7 1/8	1/2
SAV6-5-AA	SHV6-5-AA	5	6	6 1/4	1 7/8	8 7/8	8 1/8	1/2

© 2011, AFL, all rights reserved. PP-3-00442, 1.12.11
Specifications are subject to change without notice.

DOSSERT®

TYPE XBC-AA

Aluminum Bus Support Coupler

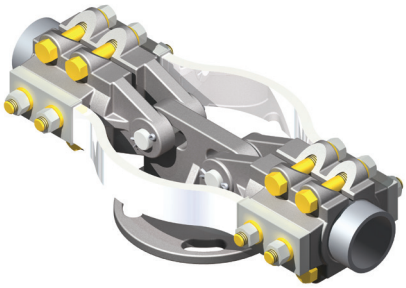

A bus support coupler is designed to conduct the full rated load of the tubular buses, and at the same time permit free axial movement of each bus member. The shackle type fitting allows slight angular deviation of the buses from the horizontal position where they cannot be kept on a true plane.

Material

Aluminum Alloy

Lamination Material

Pure Aluminum

Hardware

Yellow anodized aluminum nuts, bolts and lockwashers.
Galvanized Steel mounting hardware included.

For base mounting dimensions and hardware see page 3 in the general catalog index.

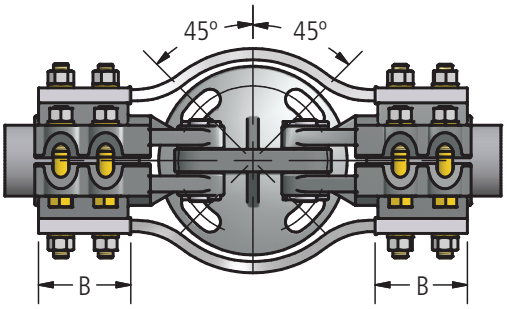

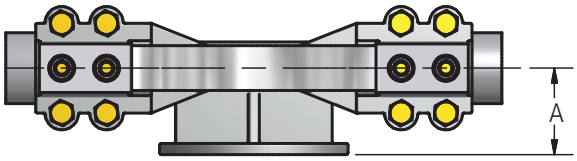

Ordering Information

CATALOG NUMBER	SPS	BOLT CIRCLE	DIMENSIONS IN INCHES		
			A	B	BOLT SIZE
XBC75-3-AA	3/4	3	2	3	1/2
XBC75-5-AA	3/4	5	2-1/4	3	1/2
XBC100-3-AA	1	3	2	3	1/2
XBC100-5-AA	1	5	2-1/4	3	1/2
XBC125-3-AA	1-1/4	3	2-1/4	3	1/2
XBC125-5-AA	1-1/4	5	2-3/8	3	1/2
XBC150-3-AA	1-1/2	3	2-1/2	3	1/2
XBC150-5-AA	1-1/2	5	2-1/2	3	1/2
XBC200-3-AA	2	3	2-3/4	3-1/4	1/2
XBC200-5-AA	2	5	2-3/4	3-1/4	1/2
XBC250-3-AA	2-1/2	3	3-1/8	3-1/4	1/2
XBC250-5-AA	2-1/2	5	3-1/8	3-1/4	1/2
XBC300-3-AA	3	3	3-5/8	3-1/2	5/8
XBC300-5-AA	3	5	3-5/8	3-1/2	5/8
XBC350-3-AA	3-1/2	3	4	3-1/2	5/8
XBC350-5-AA	3-1/2	5	4	3-1/2	5/8
XBC400-3-AA	4	3	4-1/2	3-1/2	5/8
XBC400-5-AA	4	5	4-1/2	3-1/2	5/8
XBC500-5-AA	5	5	5-1/8	3-3/4	5/8
XBC600-5-AA	6	5	5-1/2	3-3/4	5/8

© 2011, AFL, all rights reserved. PP-3-00589, Revision 1, 11.29.18
Specifications are subject to change without notice.

230 kV Aluminum Bolted Bus Supports

DOSSERT®

TYPE XBCW-AA

Expansion Bus Support

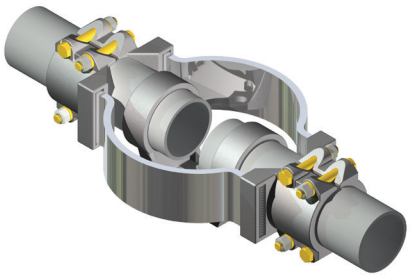

Expansion support is designed to compensate for expansion and contraction during long bus runs. Laminated straps provide for 1.4" of expansion or contraction for pipe sizes 3/4" through 1-1/2" NPS. For pipe sizes 2" through 6" NPS, the straps allow for expansion or contraction of 2.6".

Material

Aluminum Alloy

Hardware

Yellow anodized aluminum bolts, nuts, and lockwashers.
Galvanized steel base mounting hardware is included.

Notes

For base mounting dimensions and hardware, see page 3 in the general information section.

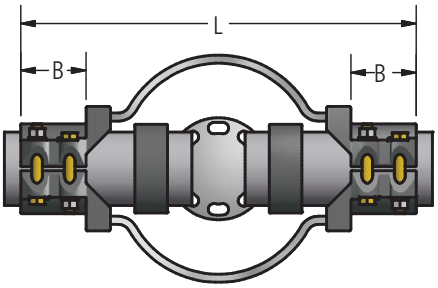

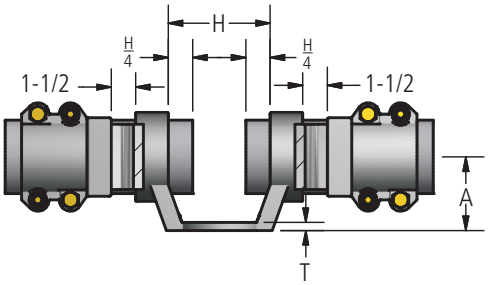

Ordering Information

CATALOG NUMBER		SPS	BOLT CIRCLE	DIMENSIONS IN INCHES					BOLT SIZE
STANDARD	WITH CHATTER SPRING			A	B	H	L	T	
XBCW100-3-AA	XBCW100-3-CH-AA	1	3	2	2-3/4	4-1/2	17	3/8	1/2
XBCW100-5-AA	XBCW100-5-CH-AA	1	5	2-1/4	2-3/4	6-1/4	18-3/4	3/8	1/2
XBCW125-3-AA	XBCW125-3-CH-AA	1-1/4	3	2-1/4	3	4-1/2	17-3/4	3/8	1/2
XBCW125-5-AA	XBCW125-5-CH-AA	1-1/4	5	2-3/8	3	6-1/4	19-1/2	3/8	1/2
XBCW150-3-AA	XBCW150-3-CH-AA	1-1/2	3	2-1/2	3	4-1/2	18	3/8	1/2
XBCW150-5-AA	XBCW150-5-CH-AA	1-1/2	5	2-1/2	3	6-1/4	19-3/4	3/8	1/2
XBCW200-3-AA	XBCW200-3-CH-AA	2	3	2-3/4	3-1/4	4-1/2	19-1/8	3/8	1/2
XBCW200-5-AA	XBCW200-5-CH-AA	2	5	2-3/4	3-1/4	6-1/4	20-7/8	3/8	1/2
XBCW250-3-AA	XBCW250-3-CH-AA	2-1/2	3	3-1/8	3-1/4	4-1/2	19-1/8	3/8	1/2
XBCW250-5-AA	XBCW250-5-CH-AA	2-1/2	5	3-1/8	3-1/4	6-1/4	20-7/8	3/8	1/2
XBCW300-3-AA	XBCW300-3-CH-AA	3	3	3-5/8	3-1/2	4-1/2	19-5/8	7/16	5/8
XBCW300-5-AA	XBCW300-5-CH-AA	3	5	3-5/8	3-1/2	6-1/4	21-3/8	7/16	5/8
XBCW350-3-AA	XBCW350-3-CH-AA	3-1/2	3	4	3-1/2	4-1/2	19-7/8	1/2	5/8
XBCW350-5-AA	XBCW350-5-CH-AA	3-1/2	5	4	3-1/2	6-1/4	21-5/8	1/2	5/8
XBCW350-7-AA	XBCW350-7-CH-AA	3-1/2	7	4	3-1/2	8-3/4	23-5/8	1/2	5/8
XBCW400-3-AA	XBCW400-3-CH-AA	4	3	4-1/2	3-3/4	5	21	1/2	5/8
XBCW400-5-AA	XBCW400-5-CH-AA	4	5	4-1/2	3-3/4	6-1/4	22-3/4	1/2	5/8
XBCW400-7-AA	XBCW400-7-CH-AA	4	7	4	3	8-3/4	27	1/2	5/8
XBCW500-3-AA	XBCW500-3-CH-AA	5	3	5	4	4-1/2	21-1/2	1/2	5/8
XBCW500-5-AA	XBCW500-5-CH-AA	5	5	5	4	6-1/4	23-1/4	1/2	5/8
XBCW500-7-AA	XBCW500-7-CH-AA	5	7	5	4	8-3/4	27	1/2	5/8
XBCW600-3-AA	XBCW600-3-CH-AA	6	3	5-1/2	4	4-1/2	21-1/2	1/2	5/8
XBCW600-5-AA	XBCW600-5-CH-AA	6	5	5-1/2	4	6-1/4	23-1/4	1/2	5/8
XBCW600-7-AA	XBCW600-7-CH-AA	6	7	5-1/2	4	8-3/4	27	1/2	5/8

© 2011, AFL, all rights reserved. PP-3-00581, Rev 1, 7.23.13
Specifications are subject to change without notice.

DOSSERT®

TYPE BCX-AA

Variable Cable Tee Tap and Straight Connector

A clamp type tee connector, or reducer connector for joining two cables. This connector allows for multiple applications, and the variable cable tap and coupler accepts a wide range of conductor sizes. High conductivity Aluminum alloy body plus well balanced conductive and contact areas make for cool operation under all load conditions

Material

Aluminum Alloy

Hardware

Yellow anodized aluminum nuts, bolts and lockwashers.

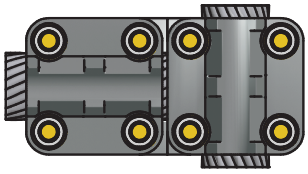

TAP CONFIGURATION

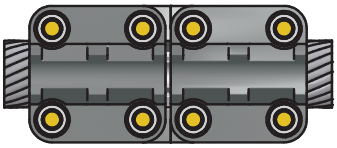

COUPLER OR REDUCER CONFIGURATION

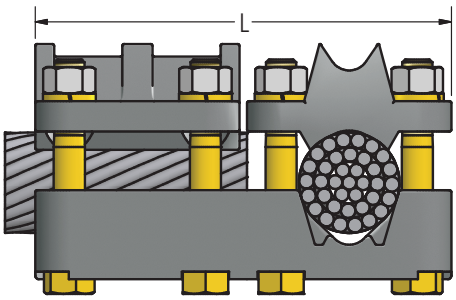

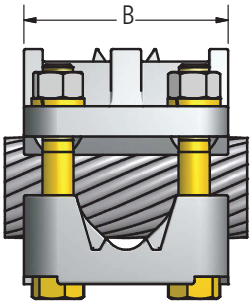

Ordering Information

CATALOG NUMBER	CONDUCTOR RANGE					SPS		DIMENSIONS IN INCHES	
	ACSR OR AAC	TAP		RUN		TAP	RUN		
		MIN	MAX	MIN	MAX			B	L
BCX100-100-AA	AAC	#2 SOL.	1000 MCM	#2 SOL.	1000 MCM	3/8 - 3/4	3/8 - 3/4	2 7/8	5 7/8
	ACSR	4(7/1)	900(36/1)	4(7/1)	900(36/1)				
BCX200-200-AA	AAC	4/0 STR.	2000 MCM	4/0 STR.	2000 MCM	3/8 - 1 1/4	3/8 - 1 1/4	3 3/8	6 7/8
	ACSR	4/0(6/1)	1780(84/19)	4/0(6/1)	1780(84/19)				
BCX350-200-AA	AAC	SEE TABLE 2							8 3/8
	ACSR								
BCX350-350-AA	AAC	795 MCM	3500 MCM	2000 MCM	3500MCM	-	-	4 1/2	10 1/2
	ACSR	795(54/7)	2515(76/19)	795(54/7)	2515(76/19)				

TABLE 2							
CATALOG NUMBER	CONDUCTOR RANGE					DIMENSIONS IN INCHES	
	ACSR OR AAC	200 SIDE (TAP)		350 SIDE (RUN)		B	
		MIN	MAX	MIN	MAX	TAP	RUN
BCX350-200-AA	AAC	4/0 STR.	2000 MCM	795 MCM	3500 MCM	3 3/8	4 1/2
	ACSR	4/0(6/1)	1780(84/19)	795(54/7)	2515(76/19)		

© 2011, AFL, all rights reserved. PP-3-00133, Revision 1. 9.20.11
Specifications are subject to change without notice.

DOSSERT®

TYPE CCV-AA

Aluminum Bolted Cable Coupler

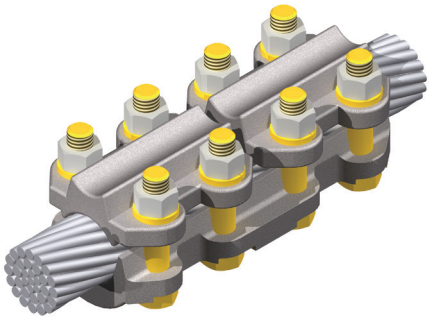

A cable to cable heavy duty variable type coupler. Each cable holding section accommodates a wide range of cable sizes.

Material

Aluminum Alloy

Hardware

Yellow anodized aluminum nuts, bolts and lockwashers.

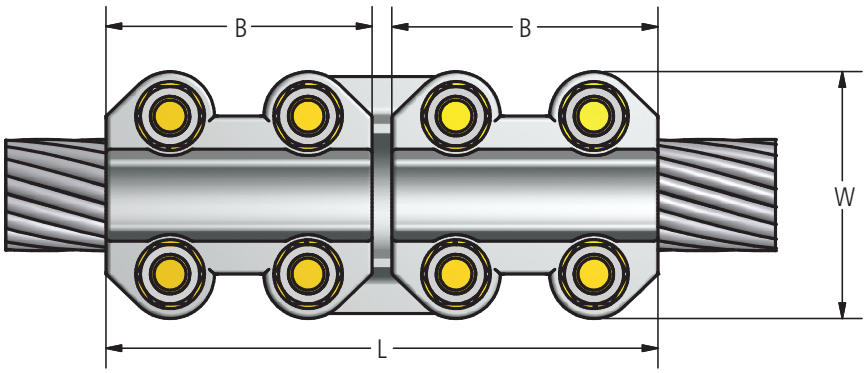

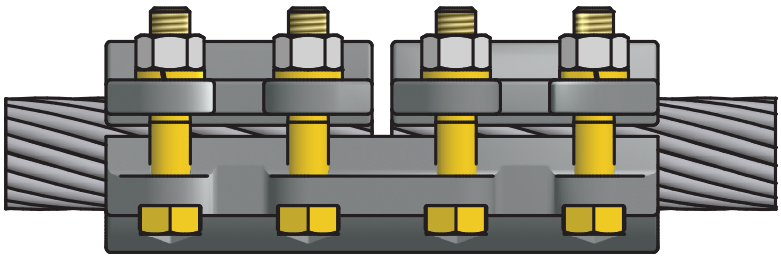

Ordering Information

CATALOG NUMBER	AAC CABLE RANGE		ACSR CABLE RANGE		DIMENSIONS IN INCHES			BOLT SIZE
	MIN	MAX	MIN	MAX	B	L	W	
CCV10-AA	4	1/0	4	1/0	1 7/8	4	2 1/4	1/2
CCV25-AA	1/0	250	1/0	4/0	3	6 1/4	2 5/16	1/2
CCV40-AA	250	400	4/0	397.5	3	6 1/4	2 1/2	1/2
CCV60-AA	350	600	336.4	477	3	6 1/4	2 11/16	1/2
CCV90-AA	500	900	477	795	3	6 1/4	2 7/8	1/2
CCV125-AA	900	1250	715	1113	3 1/4	6 3/4	3 1/16	1/2
CCV160-AA	1250	1600	1113	1431	4 3/8	9	3 5/8	5/8
CCV200-AA	1500	2000	1272	1780	4 1/2	9 1/4	3 3/4	5/8
CCV250-AA	2000	2500	1780	2300	4 1/2	9 1/4	5 15/16	5/8
CCV300-AA	2500	3000	2515	2515	4 1/2	9 1/4	5 15/16	5/8

© 2011, AFL, all rights reserved. PP-3-00275, 1.16.11
Specifications are subject to change without notice.

DOSSERT®

TYPE CP-AA
Pipe Coupler

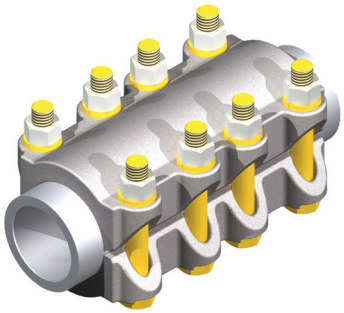

Material
Aluminum Alloy

Hardware
Yellow anodized aluminum nuts, bolts and lockwashers.

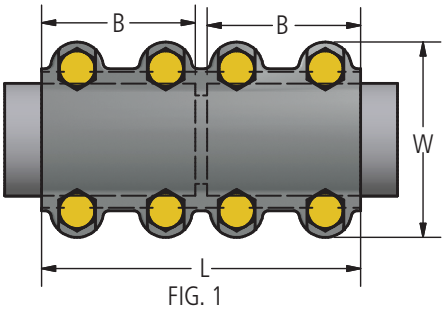

FIG. 1

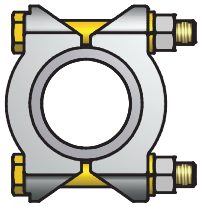

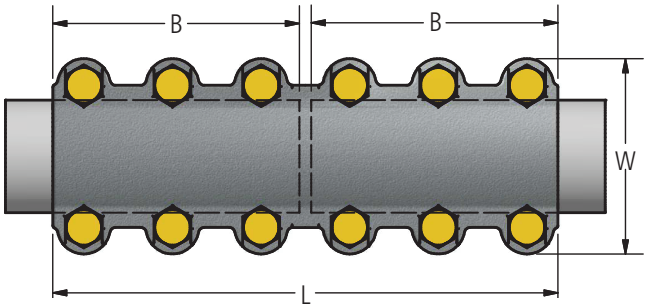

FIG. 2

Ordering Information

CATALOG NUMBER	SPS OR EHPS	FIGURE NUMBER	DIMENSIONS IN INCHES			BOLT SIZE
			B	L	W	
CP50-AA	1/2	1	2 1/2	5 1/4	2 9/16	1/2
CP75-AA	3/4	1	2 3/4	5 3/4	2 3/4	1/2
CP100-AA	1	1	2 3/4	5 3/4	3 1/16	1/2
CP125-AA	1 1/4	1	3	6 1/4	3 7/16	1/2
CP150-AA	1 1/2	1	3	6 1/4	3 11/16	1/2
CP200-AA	2	1	3 1/4	6 3/4	4 1/8	1/2
CP250-AA	2 1/2	1	3 1/4	6 3/4	4 5/8	1/2
CP300-AA	3	1	3 3/4	7 3/4	5 5/8	5/8
CP350-AA	3 1/2	1	4	8 1/4	6 1/8	5/8
CP400-AA	4	1	4 1/2	9 1/4	6 5/8	5/8
CP500-AA	5	2	7	14 1/4	7 11/16	5/8
CP600-AA	6	2	7	14 1/4	8 3/4	5/8
CP800R-AA	8 O.D.	2	6 3/16	12 5/8	10 1/8	5/8

© 2011, AFL, all rights reserved. PP-3-00288, Revision 1, 12.3.18
Specifications are subject to change without notice.

230 kV Aluminum Bolted Couplers

DOSSERT®

TYPE RCV-AA

Aluminum Reducing Cable Coupler

Reducing Cable Coupler

Material

Aluminum Alloy

Hardware

Yellow anodized aluminum nuts, bolts and lockwashers.

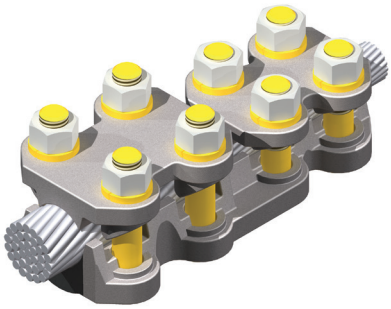

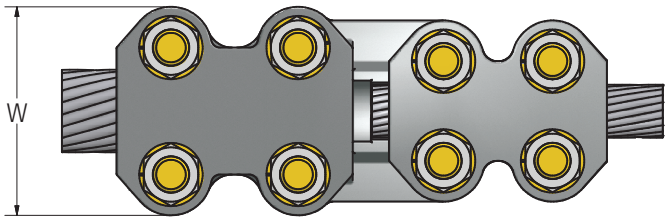

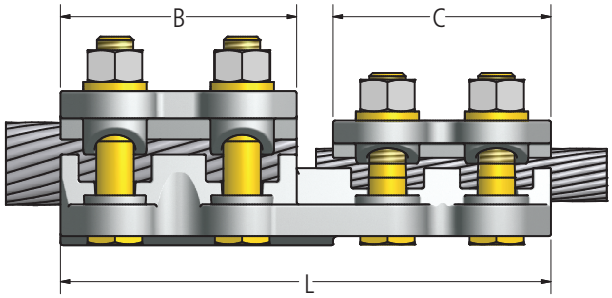

Ordering Information

CATALOG NUMBER	CABLE RANGE RUN ACSR		CABLE RANGE RUN AAC		CABLE RANGE TAP ACSR		CABLE RANGE TAP AAC		DIMENSIONS IN INCHES				BOLT SIZE RUN	BOLT SIZE TAP
	MIN	MAX	MIN	MAX	MIN	MAX	MIN	MAX	B	C	L	W		
RCV25-10-AA	1/0(6/1)	250MCM	1/0STR	4/0(6/1)	4STR	1/0(6/1)	4STR	1/0STR	3	1 7/8	5 1/2	2 5/16	1/2	1/2
RCV40-10-AA	4/0(6/1)	400MCM	250MCM	397.5(18/1)	4STR	1/0(6/1)	4STR	1/0STR	3	1 7/8	5 1/2	2 1/2	1/2	1/2
RCV40-25-AA	4/0(6/1)	400MCM	250MCM	397.5(18/1)	1/0STR	4/0(6/1)	1/0STR	250MCM	3	3	6 5/8	2 1/2	1/2	1/2
RCV60-25-AA	336.4(18/1)	600MCM	350MCM	477(30/7)	1/0STR	4/0(6/1)	1/0STR	250MCM	3	3	6 5/8	2 11/16	1/2	1/2
RCV60-40-AA	336.4(18/1)	600MCM	350MCM	477(30/7)	4/0(6/1)	397.5(18/1)	250MCM	400MCM	3	3	6 5/8	2 11/16	1/2	1/2
RCV90-25-AA	477(30/7)	900MCM	600MCM	795(54/7)	1/0(6/1)	4/0(6/1)	1/0STR	250MCM	3	3	6 5/8	2 7/8	1/2	1/2
RCV90-40-AA	477(30/7)	900MCM	600MCM	795(54/7)	4/0(6/1)	397.5(18/1)	250MCM	400MCM	3	3	6 5/8	2 7/8	1/2	1/2
RCV90-60-AA	477(30/7)	900MCM	600MCM	795(54/7)	336.4(18/1)	477(30/7)	350MCM	600MCM	3	3	6 5/8	2 7/8	1/2	1/2
RCV125-25-AA	715(30/19)	1250MCM	900MCM	1113(54/19)	1/0(6/1)	795(54/7)	1/0STR	250MCM	3 1/4	3	6 7/8	3 1/16	1/2	1/2
RCV125-40-AA	715(30/19)	1250MCM	900MCM	1113(54/19)	4/0(6/1)	397.5(18/1)	250MCM	400MCM	3 1/4	3	6 7/8	3 1/16	1/2	1/2
RCV125-60-AA	715(30/19)	1250MCM	900MCM	1113(54/19)	336.4(18/1)	477(30/7)	350MCM	600MCM	3 1/4	3	6 7/8	3 1/16	1/2	1/2
RCV125-90-AA	715(30/19)	1250MCM	900MCM	1113(54/19)	477(30/7)	795(54/7)	600MCM	900MCM	3 1/4	3	6 7/8	3 1/16	1/2	1/2
RCV160-25-AA	1113(54/19)	1600MCM	1250MCM	1431(54/7)	1/0(6/1)	795(54/7)	1/0STR	250MCM	4 3/8	3	7	3 5/8	5/8	1/2
RCV160-40-AA	1113(54/19)	1600MCM	1250MCM	1431(54/7)	4/0(6/1)	397.5(18/1)	250MCM	400MCM	4 3/8	3	7	3 5/8	5/8	1/2
RCV160-60-AA	1113(54/19)	1600MCM	1250MCM	1431(54/7)	336.4(18/1)	477(30/7)	350MCM	600MCM	4 3/8	3	7	3 5/8	5/8	1/2
RCV160-90-AA	1113(54/19)	1600MCM	1250MCM	1431(54/7)	477(30/7)	795(54/7)	600MCM	900MCM	4 3/8	3	7	3 5/8	5/8	1/2
RCV160-125-AA	1113(54/19)	1600MCM	1250MCM	1431(54/7)	715(30/19)	1113(54/19)	900MCM	1250MCM	4 3/8	3 1/4	7 1/4	3 5/8	5/8	1/2
RCV200-60-AA	1272(54/19)	2000MCM	1500MCM	1780(87/19)	336.4(18/1)	477(30/7)	350MCM	600MCM	4 1/2	3	8 1/8	3 3/4	5/8	1/2
RCV200-90-AA	1272(54/19)	2000MCM	1500MCM	1780(87/19)	477(30/7)	795(54/7)	600MCM	900MCM	4 1/2	3	8 1/8	3 3/4	5/8	1/2
RCV200-125-AA	1272(54/19)	2000MCM	1500MCM	1780(87/19)	715(30/19)	1113(54/19)	900MCM	1250MCM	4 1/2	3 1/4	8 3/8	3 3/4	5/8	1/2
RCV200-160-AA	1272(54/19)	2000MCM	1500MCM	1780(87/19)	1113(54/19)	1431(54/7)	1250MCM	1600MCM	4 1/2	4 3/8	9 1/2	3 3/4	5/8	5/8
RCV250-60-AA	1780(84/19)	2500MCM	2000MCM	2300(96/19)	336.4(18/1)	477(30/7)	350MCM	600MCM	4 1/2	3	8 1/8	3 15/16	5/8	1/2
RCV250-90-AA	1780(84/19)	2500MCM	2000MCM	2300(96/19)	477(30/7)	795(54/7)	600MCM	900MCM	4 1/2	3	8 1/8	3 15/16	5/8	1/2
RCV250-125-AA	1780(84/19)	2500MCM	2000MCM	2300(96/19)	715(30/19)	1113(54/19)	900MCM	1250MCM	4 1/2	3 1/4	8 3/8	3 15/16	5/8	1/2
RCV250-160-AA	1780(84/19)	2500MCM	2000MCM	2300(96/19)	1113(54/19)	1431(54/7)	1250MCM	1600MCM	4 1/2	4 3/8	9 1/5	3 15/16	5/8	5/8
RCV250-200-AA	1780(84/19)	2500MCM	2000MCM	2300(96/19)	1272(54/19)	1780(84/19)	1500MCM	2000MCM	4 1/2	4 1/2	9 5/8	3 15/16	5/8	5/8

© 2011, AFL, all rights reserved. PP-3-00427, 1.16.11
Specifications are subject to change without notice.

DOSSERT®

TYPE RP-AA

Aluminum Reducing Clamp for Tubular Bus

A clamp type reducing coupler for connecting various sizes of standard pipe size tubular buses end to end. Contact surfaces are finished to provide a strong grip on the conductor and good electrical contact.

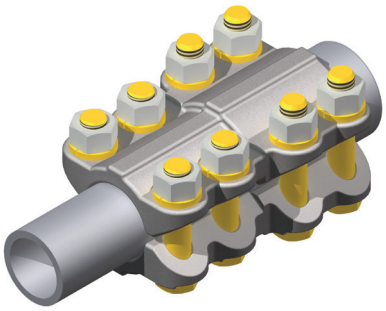

Material

Aluminum Alloy

Hardware

Yellow anodized aluminum nuts, bolts and lockwashers.

Ordering Information

CATALOG NUMBER	SPS		DIMENSIONS IN INCHES		
	RUN	TAP	B	C	L
RP75-50-AA	3/4	1/2	2-3/4	2-1/2	5-7/8
RP100-50-AA	1	1/2	2-3/4	2-1/2	5-7/8
RP100-75-AA	1	3/4	2-3/4	2-3/4	6-1/8
RP125-50-AA	1-1/4	1/2	3	2-1/2	6-1/8
RP125-75-AA	1-1/4	3/4	3	2-3/4	6-3/8
RP125-100-AA	1-1/4	1	3	2-3/4	6-3/8
RP150-75-AA	1-1/2	3/4	3	2-3/4	6-3/8
RP150-100-AA	1-1/2	1	3	2-3/4	6-3/8
RP150-125-AA	1-1/2	1-1/4	3	3	6-5/8
RP200-75-AA	2	3/4	3-1/4	2-3/4	6-5/8
RP200-100-AA	2	1	3-1/4	2-3/4	6-5/8
RP200-125-AA	2	1-1/4	3-1/4	3	6-7/8
RP200-150-AA	2	1-1/2	3-1/4	3	6-7/8
RP250-75-AA	2-1/2	3/4	3-1/4	2-3/4	6-5/8
RP250-100-AA	2-1/2	1	3-1/4	2-3/4	6-5/8
RP250-125-AA	2-1/2	1-1/4	3-1/4	3	6-7/8
RP250-150-AA	2-1/2	1-1/2	3-1/4	3	6-7/8
RP250-200-AA	2-1/2	1-1/2	3-1/4	3-1/4	7-1/4
RP300-100R-AA	3	1 O.D.	3-1/4	2-3/4	6-3/4
RP300-100-AA	3	1	3-1/4	2-3/4	6-3/4
RP300-125-AA	3	1-1/4	3-1/4	3	7
RP300-150-AA	3	1-1/2	3-1/4	3	7
RP300-200-AA	3	2	3-1/4	3-1/4	7-1/4
RP300-250-AA	3	2-1/2	3-1/4	3-1/4	7-1/4
RP350-125-AA	3-1/2	1-1/4	3-1/4	3-1/4	8-1/4
RP350-150-AA	3-1/2	1-1/2	3-1/4	3	7
RP350-200-AA	3-1/2	2	3-1/4	3-1/4	7-1/4
RP350-250-AA	3-1/2	2-1/2	3-1/4	3-1/4	7-1/4
RP350-300-AA	3-1/2	3	3-3/4	3-3/4	8-1/4
RP400-150-AA	4	1-1/2	3-1/4	3	7
RP400-200-AA	4	2	3-1/4	3-1/4	7-1/4
RP400-250-AA	4	2-1/2	3-1/4	3-1/4	7-1/4
RP400-300-AA	4	3	3-3/4	3-3/4	8-1/4
RP400-350-AA	4	3-1/2	3-3/4	3-1/2	7-1/2
RP500-200-AA	5	2	3-1/2	3-1/4	7-1/2
RP500-250-AA	5	2-1/2	3-1/2	3-1/4	7-1/2
RP500-300-AA	5	3	3-3/4	3-3/4	8-1/2
RP500-350-AA	5	3-1/2	3-3/4	3-1/2	7-1/2
RP500-400-AA	5	4	3-3/4	3-3/4	7-7/8
RP600-200-AA	6	2	3-1/2	3-1/4	7-1/2
RP600-250-AA	6	2-1/2	3-1/2	3-1/4	7-1/2
RP600-300-AA	6	3	4	3-3/4	8-5/8
RP600-350-AA	6	3-1/2	4	3-3/4	8-5/8
RP600-400-AA	6	4	4	3-3/4	8-5/8
RP600-500-AA	6	5	6	6	12-7/8

This part comes with 12 bolts and 12 nuts and lockwashers

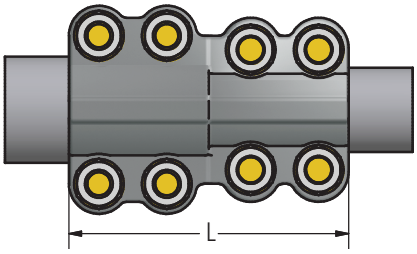

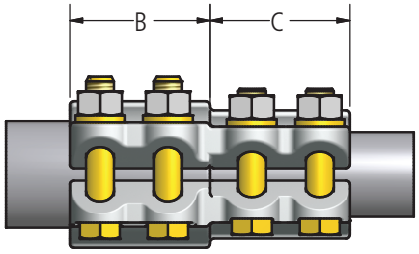

© 2011, AFL, all rights reserved. PP-3-00432, Revision 2, 3.28.2023
Specifications are subject to change without notice.

DOSSERT®

TYPE RPCV-AA

Aluminum Pipe to Cable Coupler

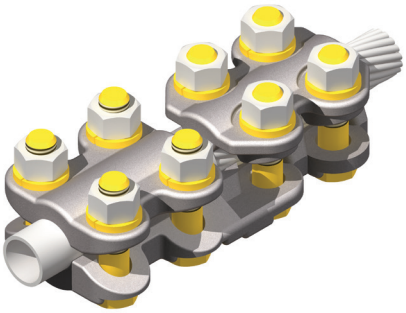

A pipe to cable coupler which takes a wide range of cable sizes on the cable clamping member. All clamping members act independently.

Material

Aluminum Alloy

Hardware

Aluminum nuts, bolts and lockwashers.

Notes

- For Electro Tin plate, add "-SN" to catalog number. EX: RPCV75-90-AA-SN
- For Grade Five Galvanized Steel Hardware add "-GS5" to catalog number. EX: RPCV75-90-AA-GS5
- For Stainless Steel bolts, lockwashers and Everdur nuts, add "-SSHBN" to catalog number. EX: RPCV75-90-AA-SSHBN

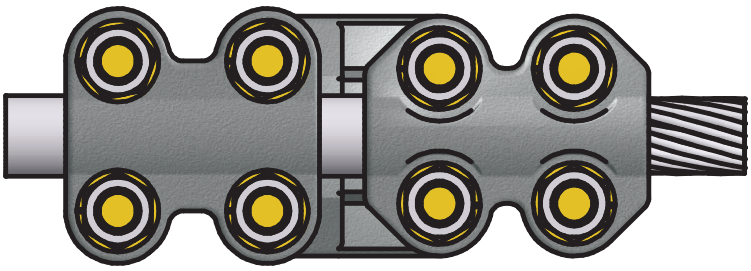

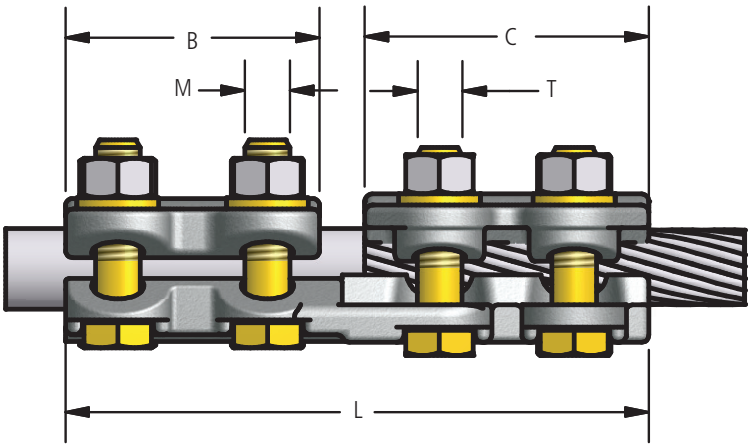

© 2011, AFL, all rights reserved. PP-3-00433, Revision 2, 2.1.19
Specifications are subject to change without notice.

DOSSERT®

TYPE RPCV-AA

Aluminum Pipe to Cable Coupler

Ordering Information

CATALOG NUMBER	SPS	CABLE RANGE AAC		CABLE RANGE ACSR		DIMENSIONS IN INCHES			BOLT SIZE	
		MIN	MAX	MIN	MAX	B	C	L	M	T
RPCV75-25-AA	3/4	1/0STR	250MCM	1/0STR	4/0STR	2 3/4	3	6 3/8	1/2	1/2
RPCV75-40-AA	3/4	250MCM	400MCM	4/0STR	397.5 MCM	2 3/4	3	6 3/8	1/2	1/2
RPCV75-60-AA	3/4	350MCM	600MCM	336.4 MCM	477MCM	2 3/4	3	6 3/8	1/2	1/2
RPCV75-90-AA	3/4	500MCM	900MCM	477MCM	795MCM	2 3/4	3	6 3/8	1/2	1/2
RPCV100-25-AA	1	1/0STR	250MCM	1/0STR	4/0STR	2 3/4	3	6 3/8	1/2	1/2
RPCV100-40-AA	1	250MCM	400MCM	4/0STR	397.5 MCM	2 3/4	3	6 3/8	1/2	1/2
RPCV100-60-AA	1	350MCM	600MCM	366.4 MCM	477MCM	2 3/4	3	6 3/8	1/2	1/2
RPCV100-90-AA	1	500MCM	900MCM	477MCM	795MCM	2 3/4	3	6 3/8	1/2	1/2
RPCV118R-25-AA	30mm	1/0STR	250MCM	1/0STR	4/0STR	2 3/4	3	6 3/8	1/2	1/2
RPCV118R-40-AA	30mm	250MCM	400MCM	4/0STR	397.5 MCM	2 3/4	3	6 3/8	1/2	1/2
RPCV118R-90-AA	30mm	500MCM	900MCM	477MCM	795MCM	2 3/4	3	6 5/8	1/2	1/2
RPCV118R-125-AA	30mm	900MCM	1250MCM	715MCM	1113MCM	2 3/4	3 1/4	6 5/8	1/2	1/2
RPCV125-25-AA	1 1/4	1/0STR	250MCM	1/0STR	4/0STR	3	3	6 5/8	1/2	1/2
RPCV125-40-AA	1 1/4	250MCM	400MCM	4/0STR	397.5 MCM	3	3	6 5/8	1/2	1/2
RPCV125-60-AA	1 1/4	350MCM	600MCM	336.4 MCM	477MCM	3	3	6 5/8	1/2	1/2
RPCV125-90-AA	1 1/4	500MCM	900MCM	477MCM	795MCM	3	3	6 5/8	1/2	1/2
RPCV125-125-AA	1 1/4	900MCM	1250MCM	715MCM	1113MCM	3	3 1/4	6 5/8	1/2	1/2
RPCV150-25-AA	1 1/2	1/0STR	250MCM	1/0STR	4/0STR	3	3	6 5/8	1/2	1/2
RPCV150-40-AA	1 1/2	250MCM	400MCM	4/0STR	397.5 MCM	3	3	6 5/8	1/2	1/2
RPCV150-60-AA	1 1/2	350MCM	600MCM	336.4 MCM	477MCM	3	3	6 5/8	1/2	1/2
RPCV150-90-AA	1 1/2	500MCM	900MCM	477MCM	795MCM	3	3	6 5/8	1/2	1/2
RPCV150-125-AA	1 1/2	900MCM	1250MCM	715MCM	1113MCM	3	3 1/4	6 7/8	1/2	1/2
RPCV150-160-AA	1 1/2	1250MCM	1600MCM	1113MCM	1431MCM	3	4 3/8	7 3/4	1/2	5/8
RPCV200-25-AA	2	1/0STR	250MCM	1/0STR	4/0STR	3 1/4	3	6 7/8	1/2	1/2
RPCV200-40-AA	2	250MCM	400MCM	4/0STR	397.5 MCM	3 1/4	3	6 7/8	1/2	1/2
RPCV200-60-AA	2	350MCM	600MCM	366.4 MCM	477MCM	3 1/4	3	6 7/8	1/2	1/2
RPCV200-90-AA	2	500MCM	900MCM	477MCM	795MCM	3 1/4	3	6 7/8	1/2	1/2
RPCV200-125-AA	2	900MCM	1250MCM	715MCM	1113MCM	3 1/4	3 1/4	7 1/8	1/2	1/2
RPCV200-160-AA	2	1250MCM	1600MCM	1113MCM	1431MCM	3 1/4	4 3/4	8 1/4	1/2	5/8
RPCV200-200-AA	2	1500MCM	2000MCM	1272MCM	1780MCM	3 1/4	4 1/2	8 3/8	1/2	5/8
RPCV250-25-AA	2 1/2	1/0STR	250MCM	1/0STR	4/0STR	3 1/4	3	6 7/8	1/2	1/2
RPCV250-40-AA	2 1/2	250MCM	400MCM	4/0STR	397.5 MCM	3 1/4	3	6 7/8	1/2	1/2
RPCV250-60-AA	2 1/2	350MCM	600MCM	366.4 MCM	477MCM	3 1/4	3	6 7/8	1/2	1/2
RPCV250-90-AA	2 1/2	500MCM	900MCM	477MCM	795MCM	3 1/4	3	6 7/8	1/2	1/2
RPCV250-125-AA	2 1/2	900MCM	1250MCM	715MCM	1113MCM	3 1/4	3 1/4	7 1/8	1/2	1/2
RPCV250-160-AA	2 1/2	1250MCM	1600MCM	1113MCM	1431MCM	3 1/2	4 3/8	8 1/2	5/8	5/8
RPCV300-25-AA	3	1/0STR	250MCM	1/0STR	4/0STR	3 1/4	3	6 7/8	1/2	1/2
RPCV300-40-AA	3	250MCM	400MCM	4/0STR	397.5 MCM	3 1/4	3	6 7/8	1/2	1/2
RPCV300-60-AA	3	350MCM	600MCM	336.4 MCM	477MCM	3 1/4	3	6 7/8	1/2	1/2
RPCV300-90-AA	3	500MCM	900MCM	477MCM	795MCM	3 1/4	3	6 7/8	1/2	1/2
RPCV300-125-AA	3	900MCM	1250MCM	715MCM	1113MCM	3 1/4	3 1/4	7 1/8	1/2	1/2
RPCV300-160-AA	3	1250MCM	1600MCM	1113MCM	1431MCM	3 3/4	4 3/8	8 3/4	5/8	5/8
RPCV300-200-AA	3	1500MCM	2000MCM	1272MCM	1780MCM	3 3/4	4 1/2	8 7/8	5/8	5/8
RPCV300-250-AA	3	2000MCM	2500MCM	1780 MCM	2300 MCM	3 3/4	4 1/2	8 7/8	5/8	5/8
RPCV300-350-AA	3	3000 MCM	3500 MCM	—	—	3 3/4	4 1/2	8 7/8	5/8	5/8
RPCV350-40-AA	3 1/2	250MCM	400MCM	4/0STR	397.5 MCM	3 1/4	3	6 7/8	1/2	1/2
RPCV350-60-AA	3 1/2	350MCM	600MCM	336.4 MCM	477MCM	3 1/4	3	6 7/8	1/2	1/2
RPCV350-90-AA	3 1/2	500MCM	900MCM	477MCM	795MCM	3 1/4	3	6 7/8	1/2	1/2
RPCV350-125-AA	3 1/2	900MCM	1250MCM	715MCM	1113MCM	3 1/4	3 1/4	7 1/8	1/2	1/2
RPCV350-160-AA	3 1/2	1250MCM	1600MCM	1113MCM	1431MCM	3 3/4	4 3/8	8 3/4	5/8	5/8
RPCV350-200-AA	3 1/2	1500MCM	2000MCM	1272MCM	1780MCM	3 3/4	4 1/2	8 7/8	5/8	5/8
RPCV400-40-AA	4	250MCM	400MCM	4/0STR	397.5 MCM	3 3/4	3	6 7/8	1/2	1/2
RPCV400-60-AA	4	350MCM	600MCM	336.4 MCM	477MCM	3 3/4	3	6 7/8	1/2	1/2
RPCV400-90-AA	4	500MCM	900MCM	477MCM	795MCM	3 3/4	3	6 7/8	1/2	1/2
RPCV400-125-AA	4	900MCM	1250MCM	715MCM	1113MCM	3 3/4	3 1/4	7 3/4	1/2	1/2
RPCV400-160-AA	4	1250MCM	1600MCM	1113MCM	1431MCM	3 3/4	4 3/8	8 3/4	5/8	5/8
RPCV400-200-AA	4	1500MCM	2000MCM	1272MCM	1780MCM	3 3/4	4 1/2	8 7/8	5/8	5/8
RPCV400-250-AA	4	2000 MCM	2500 MCM	1780 MCM	2300 MCM	3 3/4	4 1/2	9	5/8	5/8
RPCV500-60-AA	5	350MCM	600MCM	336.4 MCM	477MCM	3 1/4	3	6 7/8	1/2	1/2
RPCV500-90-AA	5	500MCM	900MCM	477MCM	795MCM	3 1/4	3	6 7/8	1/2	1/2
RPCV500-125-AA	5	900MCM	1250MCM	715MCM	1113MCM	3 1/4	3 1/4	7 1/8	1/2	1/2
RPCV500-160-AA	5	1250MCM	1600MCM	1113MCM	1431MCM	7	4 3/8	11 3/4	5/8	5/8
RPCV500-200-AA	5	1500MCM	2000MCM	1272MCM	1780MCM	3 3/4	4 1/2	8 7/8	5/8	5/8

© 2011, AFL, all rights reserved. PP-3-00433, Revision 2, 2.1.19
Specifications are subject to change without notice.

DOSSERT®

TYPE UK-AA

Aluminum U-Bolt Coupler

A U-Bolt type straight connector for coupling end to end two cables. Each half of the connector takes a wide range of cable sizes. Designed to provide high contact pressure on all cable sizes.

Material

Aluminum Alloy

Hardware

Yellow anodized aluminum nuts, U-bolts and lockwashers.

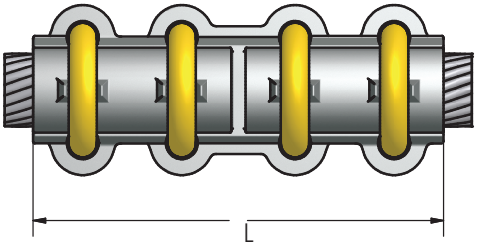

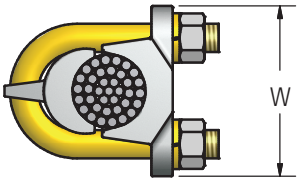

Ordering Information

CATALOG NUMBER	AAC CABLE RANGE		DIMENSIONS IN INCHES		U-BOLT SIZE
	MIN	MAX	L	W	
UK13-AA	6	#2/0	6 1/4	2 1/16	1/2
UK21-AA	1	#4/0	6 1/4	2 7/32	1/2
UK30-AA	#1/0	300	6 3/4	2 5/16	1/2
UK50-AA	300	500	7 1/4	2 1/2	1/2
UK90-AA	500	900	7 1/4	2 25/32	1/2
UK100-AA	750	1000	7 1/4	2 27/32	1/2
UK125-AA	600	1250	7 1/4	3	1/2
UK150-AA	1000	1500	9 1/4	3 11/32	5/8
UK200-AA	1500	2000	9 1/4	3 5/8	5/8

© 2011, AFL, all rights reserved. PP-3-00494, Revision 1, 7.23.13
Specifications are subject to change without notice.

DOSSERT®

TYPE UKR-AA

Aluminum U-Bolt Coupler Reducer

A U-Bolt type reducer connector for coupling end to end two unequal size cables. The variability of each half of the connector makes possible the combination of many sizes of cable.

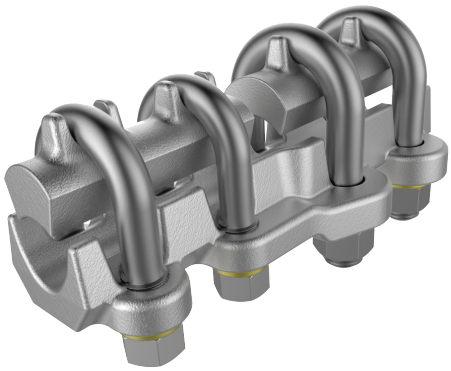

Material

Aluminum Alloy

Hardware

Yellow anodized aluminum nuts, U-bolts and lockwashers.

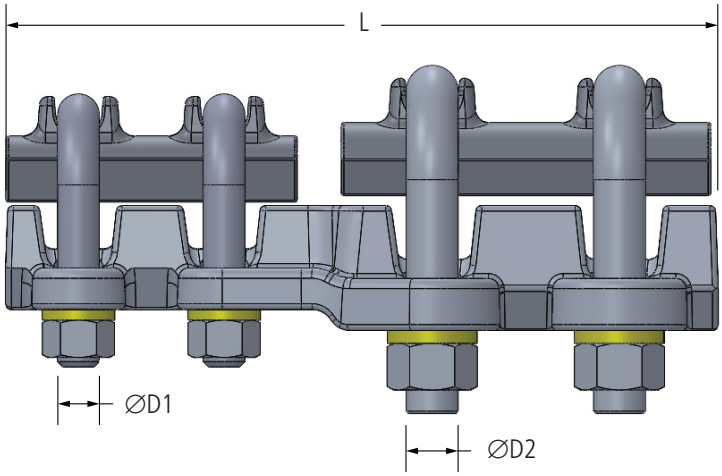

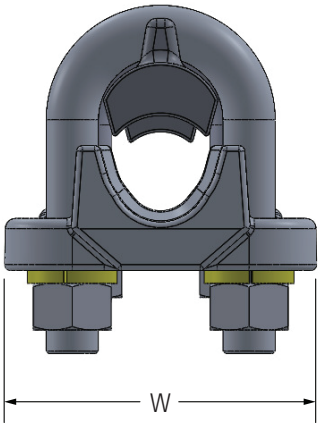

Ordering Information

CATALOG NUMBER	CABLE RANGE				DIMENSIONS IN INCHES		U-BOLT SIZE	
	MAIN		TAP					
	MIN	MAX	MIN	MAX	L	W	D1	D2
UKR21-13-AA	1	4/0	6	2/0	6 1/4	2 7/32	1/2	1/2
UKR30-13-AA	1/0	300	6	2/0	6 1/2	2 5/16	1/2	1/2
UKR30-21-AA	1/0	300	1	4/0	6 1/2	2 5/16	1/2	1/2
UKR50-13-AA	300	500	6	2/0	6 1/2	2 1/2	1/2	1/2
UKR50-21-AA	300	500	1	4/0	6 1/2	2 1/2	1/2	1/2
UKR50-30-AA	300	500	1/0	300	6 3/4	2 1/2	1/2	1/2
UKR90-13-AA	500	900	6	2/0	6 3/4	2 5/32	1/2	1/2
UKR90-21-AA	500	900	1	4/0	6 3/4	2 5/32	1/2	1/2
UKR90-30-AA	500	900	1/0	300	7	2 5/32	1/2	1/2
UKR90-50-AA	500	900	300	500	7	2 5/32	1/2	1/2
UKR100-21-AA	500	900	1	4/0	6 3/4	2 7/32	1/2	1/2
UKR100-30-AA	750	1000	1/0	300	7	2 7/32	1/2	1/2
UKR100-50-AA	750	1000	300	500	7	2 7/32	1/2	1/2
UKR100-90-AA	750	1000	500	900	7 1/4	2 7/32	1/2	1/2
UKR150-30-AA	1000	1500	1/0	300	7 1/2	3 11/32	1/2	1/2
UKR150-50-AA	1000	1500	300	500	7 1/2	3 11/32	1/2	1/2
UKR150-90-AA	1000	1500	500	900	8 3/8	3 3/4	1/2	5/8
UKR150-100-AA	1000	1500	750	1000	7 3/4	3 11/32	1/2	1/2
UKR200-50-AA	1500	2000	300	500	7 1/2	3 9/16	1/2	1/2
UKR200-90-AA	1500	2000	500	900	7 3/4	3 9/16	1/2	1/2
UKR200-100-AA	1500	2000	750	1000	7 3/4	3 9/16	1/2	1/2
UKR200-150-AA	1500	2000	1000	1500	9 3/4	3 9/16	5/8	5/8

© 2011, AFL, all rights reserved. PP-3-00496, Revision 1, 8.24.2020
Specifications are subject to change without notice.

230 kV Aluminum Bolted Couplers

DOSSERT®

TYPE UPK-AA

Reducing U-Bolt Pipe to Cable Coupler

A U-bolt cable to pipe coupler. The variable U-bolt feature makes it possible for the connector for a given pipe size to accommodate several different cable sizes.

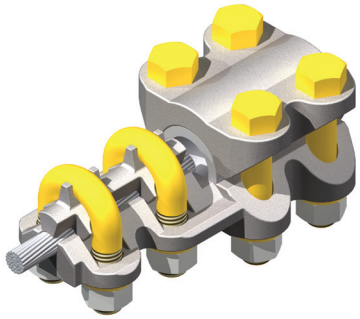

Material

Aluminum Alloy

Hardware

Yellow anodized aluminum nuts, bolts, U-bolts and lockwashers.

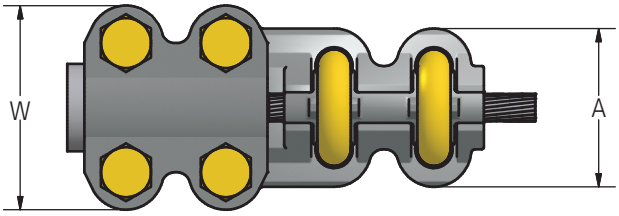

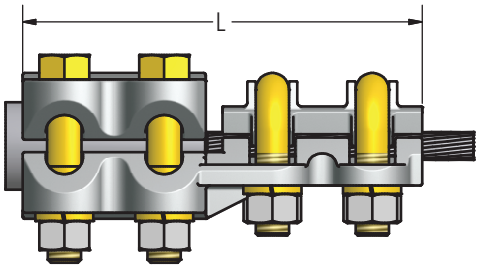

Ordering Information

CATALOG NUMBER	SPS	CABLE RANGE		DIMENSIONS IN INCHES			BOLT SIZE	U-BOLT SIZE
		MIN	MAX	A	L	W		
UPK50-13-AA	1/2	6STR	2/0STR	2 1/8	6	2 19/32	1/2	1/2
UPK50-21-AA	1/2	1STR	4/0STR	2 7/32	6	2 19/32	1/2	1/2
UPK50-30-AA	1/2	1/0STR	300MCM	2 5/16	6 1/4	2 19/32	1/2	1/2
UPK75-13-AA	3/4	6STR	2/0STR	2 1/8	6 1/4	2 19/32	1/2	1/2
UPK75-21-AA	3/4	1STR	4/0STR	2 732	6 1/4	2 13/16	1/2	1/2
UPK75-30-AA	3/4	1/0STR	300MCM	2 5/16	6 1/2	2 13/16	1/2	1/2
UPK75-50-AA	3/4	300MCM	500MCM	2 1/2	6 1/2	2 13/16	1/2	1/2
UPK100-13-AA	1	6STR	2/0STR	2 1/8	6 1/4	2 13/16	1/2	1/2
UPK100-21-AA	1	1STR	4/0STR	2 7/32	6 1/4	3 1/16	1/2	1/2
UPK100-30-AA	1	1/0STR	300MCM	2 5/16	6 1/2	3 1/16	1/2	1/2
UPK100-50-AA	1	300MCM	500MCM	2 1/2	6 1/2	3 1/16	1/2	1/2
UPK100-90-AA	1	500MCM	900MCM	2 25/32	6 1/2	3 1/16	1/2	1/2
UPK125-13-AA	1 1/4	6STR	2/0STR	2 1/8	6 5/8	3 1/16	1/2	1/2
UPK125-21-AA	1 1/4	1STR	4/0STR	2 7/32	6 5/8	3 13/32	1/2	1/2
UPK125-30-AA	1 1/4	1/0STR	300MCM	2 5/16	6 7/8	3 13/32	1/2	1/2
UPK125-50-AA	1 1/4	300MCM	500MCM	2 1/2	6 7/8	3 13/32	1/2	1/2
UPK125-90-AA	1 1/4	500MCM	900MCM	2 25/32	6 7/8	3 13/32	1/2	1/2
UPK125-100-AA	1 1/4	750MCM	1000MCM	2 27/32	7 1/8	3 13/32	1/2	1/2
UPK150-13-AA	1 1/2	6STR	2/0STR	2 1/8	6 3/8	3 21/32	1/2	1/2
UPK150-21-AA	1 1/2	1STR	4/0STR	2 7/32	6 5/8	3 21/32	1/2	1/2
UPK150-30-AA	1 1/2	1/0STR	300MCM	2 5/16	6 7/8	3 21/32	1/2	1/2
UPK150-50-AA	1 1/2	300MCM	500MCM	2 1/2	6 7/8	3 21/32	1/2	1/2
UPK150-90-AA	1 1/2	500MCM	900MCM	2 13/16	7	3 21/32	1/2	1/2
UPK150-100-AA	1 1/2	750MCM	1000MCM	2 27/32	7 1/8	3 21/32	1/2	1/2
UPK150-150-AA	1 1/2	1000MCM	1500MCM	3 1/2	7 5/8	3 21/32	1/2	5/8
UPK150-200-AA	1 1/2	1500MCM	2000MCM	3 11/16	7 7/8	3 21/32	1/2	5/8
UPK200-21-AA	2	1STR	4/0STR	2 7/32	6 7/8	4 1/8	1/2	1/2
UPK200-30-AA	2	1/0STR	300MCM	2 5/16	7 1/8	4 1/8	1/2	1/2
UPK200-50-AA	2	300MCM	500MCM	2 1/2	7 1/8	4 1/8	1/2	1/2
UPK200-90-AA	2	500MCM	900MCM	2 25/32	7 1/8	4 1/8	1/2	1/2
UPK200-100-AA	2	750MCM	1000MCM	2 27/32	7 3/8	4 1/8	1/2	1/2
UPK200-150-AA	2	1000MCM	1500MCM	3 1/2	7 5/8	4 1/8	1/2	5/8
UPK200-200-AA	2	1500MCM	2000MCM	3 11/16	7 7/8	4 1/8	1/2	5/8
UPK300-90-AA	3	500MCM	900MCM	2 35/32	7 1/4	5 1/4	1/2	1/2
UPK300-150-AA	3	1000MCM	1500MCM	3 1/2	9 1/4	5 5/8	5/8	5/8
UPK300-200-AA	3	1500MCM	2000MCM	3 1/2	8 7/8	5 1/2	5/8	5/8

© 2011, AFL, all rights reserved. PP-3-00510, 1.16.11
Specifications are subject to change without notice.

DOSSERT®

TYPE XCW-AA

Expansion Coupler Connector

Expansion couplers are designed to compensate for expansion and contraction in long bus runs.

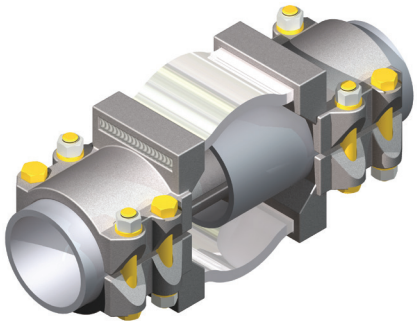

Material

Aluminum Alloy

Hardware

Yellow anodized aluminum bolts, nuts, and lockwashers.

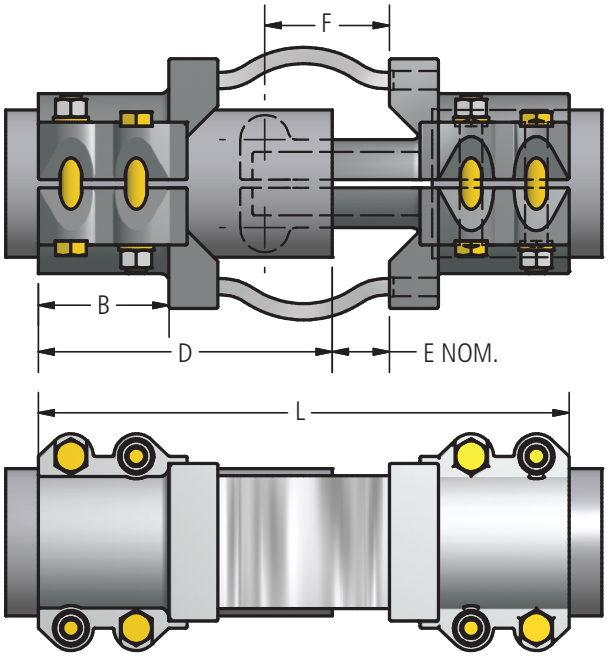

Ordering Information

CATALOG NUMBER		SPS	DIMENSIONS IN INCHES					
SCH40	SCH80		B	D	E	F	L	BOLT SIZE
XCW100-AA	XCW100E-AA	1	2-3/4	7-5/16	1-1/2	3-1/4	12-5/16	1/2
XCW125-AA	XCW125E-AA	1-1/4	3	8-1/2	1-1/2	3-1/4	14-3/4	1/2
XCW150-AA	XCW150E-AA	1-1/2	3	8-11/16	1-1/2	3-1/2	15-3/16	1/2
XCW200-AA	XCW200E-AA	2	3-1/4	8-1/2	2-1/8	4-3/4	16-1/2	1/2
XCW250-AA	XCW250E-AA	2-1/2	3-1/4	9-7/16	2-1/8	4-3/4	17-7/16	1/2
XCW300-AA	XCW300E-AA	3	3-1/2	10-1/2	2-1/8	4-3/4	18-3/4	5/8
XCW350-AA	XCW350E-AA	3-1/2	3-1/2	11	2-1/8	4-3/4	19-3/4	5/8
XCW400-AA	XCW400E-AA	4	3-3/4	11-13/16	2-1/8	4-3/4	20-11/16	5/8
XCW500-AA	XCW500E-AA	5	4	12	2-7/8	6-5/8	21-7/8	5/8
XCW600-AA	XCW600E-AA	6	4	14-1/4	2-7/8	6-5/8	24-1/8	5/8

© 2011, AFL, all rights reserved. PP-3-00592, 1.16.11
Specifications are subject to change without notice.

DOSSERT®

TYPE CI-AA SERIES

'Drive Fit' End Plug

'Drive fit' end plugs are designed to be forced into end of bus tube. End plug reduces electrostatic losses, seals out moisture and prevents birds from nesting in tube ends.

Material

Aluminum Alloy

Ordering Instructions

Step 1: Determine Catalog Number based on the bus conductor being used.
Example: End Plug for 4" schedule 40 bus pipe, the complete catalog number is: CI400-AA.

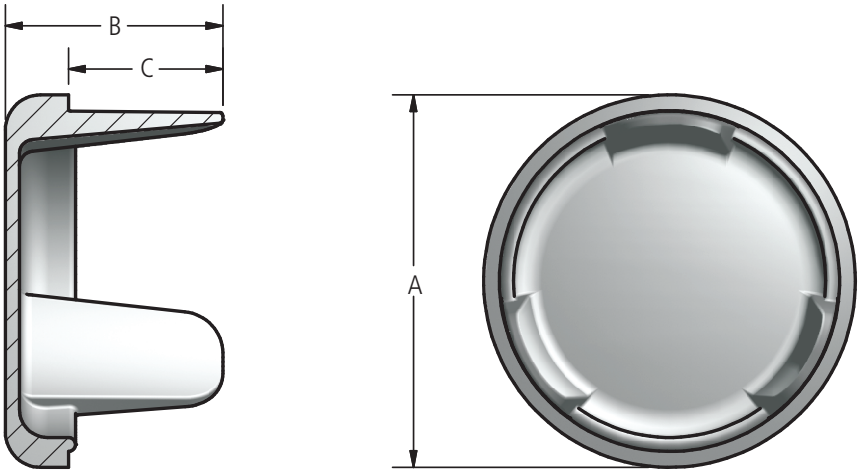

Ordering Information

CATALOG NUMBER		CONDUCTOR SIZE	DIMENSIONS IN INCHES		
SCH40	SCH80	SPS/EHPS	A	B	C
CI75-AA	CI75E-AA	3/4	1.1	.9	0.50
CI100-AA	CI100E-AA	1	1.3	1.0	0.56
CI125-AA	CI125E-AA	1 1/4	1.7	1.0	0.63
CI150-AA	CI150E-AA	1 1/2	1.9	1.0	0.60
CI200-AA	CI200E-AA	2	2.4	1.3	0.90
CI250-AA	CI250E-AA	2 1/2	2.9	1.6	1.10
CI300-AA	CI300E-AA	3	3.5	1.8	1.10
CI350-AA	CI350E-AA	3 1/2	4.0	2.4	1.60
CI400-AA	CI400E-AA	4	4.5	2.9	2.00
CI500-AA	CI500E-AA	5	5.6	3.4	2.40
CI600-AA	CI600E-AA	6	6.6	3.9	2.80
CI600R-AA 3/8 in wall		6 OD	6.0	3.5	2.50
CI800-AA	CI800E-AA	8	8.6	4.0	3.00
CI800R-AA 1/2 in wall		8 OD	8.0	4.0	3.00

© 2011, AFL, all rights reserved. PP-3-00286, Revision 1, 3.18.19
Specifications are subject to change without notice.

DOSSERT®

TYPE 16200

Internal Bolted End Plug

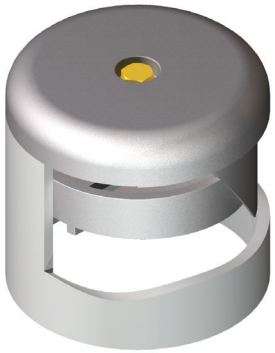

Bolted end plug is designed to wedge on inside of bus tube. End plugs reduce electrostatic losses, seal out moisture and prevent birds from nesting in tube ends. Bolted end plugs can be easily removed for modifications or future expansions.

Material

Aluminum Alloy

Hardware

Yellow anodized aluminum bolts, nuts, and lockwashers.

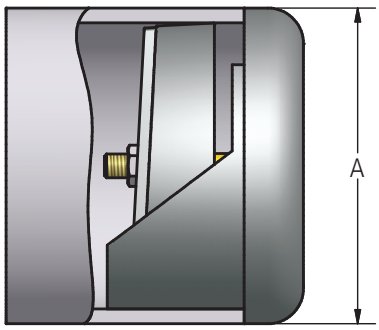

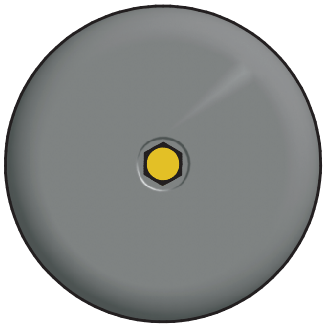

Ordering Information

CATALOG NUMBER		CONDUCTOR SIZE	DIMENSIONS IN INCHES	BOLT SIZE	NOMINAL WEIGHT LBS
SCH40	SCH80	SPS & EHPS	A		
16204	16224	1-1/4	1.66	1/4	0.25
16205	16225	1-1/2	1.90	1/4	0.37
16206	16226	2	2.38	1/4	0.45
16207	16227	2-1/2	2.88	3/8	0.64
16208	16228	3	3.50	3/8	0.86
16209	16229	3-1/2	4.00	3/8	0.98
16210	16230	4	4.50	3/8	1.90
16212	16232	5	5.56	3/8	2.30
16213	16233	6	6.62	1/2	4.50

© 2011, AFL, all rights reserved. PP-3-00158, 1.16.11
Specifications are subject to change without notice.

DOSSERT®

TYPE CX-AA

Aluminum Corona Bell For Tubular Bus

Corona Bell for sealing the exposed ends of standard pipe size tubular buses. Prevents rain and undue condensation from accumulating inside the bus. The smooth rounded surfaces reduce electrostatic discharge thereby aiding in the reduction of power transmission losses.

Material

Aluminum Alloy

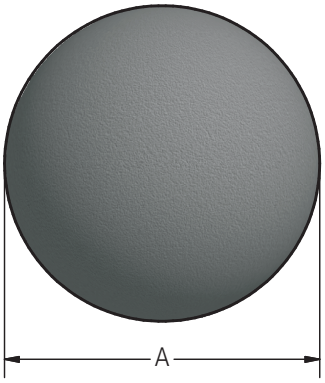

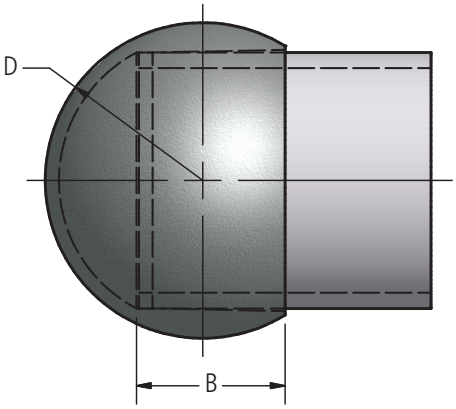

Ordering Information

CATALOG NUMBER	SPS	DIMENSIONS IN INCHES		
		A	B	D
CX50-AA	1/2	1 1/8	3/4	9/16
CX75-AA	3/4	1 3/8	7/8	11/16
CX100-AA	1	1 3/4	1 1/8	7/8
CX125-AA	1 1/4	2 1/8	1 1/8	1 1/16
CX150-AA	1 1/2	2 9/16	1 3/8	1 9/32
CX200-AA	2	3 1/8	1 1/2	1 9/16
CX250-AA	2 1/2	3 5/8	1 5/8	1 13/16
CX300-AA	3	4 5/16	1 7/8	2 5/32
CX350-AA	3 1/2	5	2 1/4	2 1/2
CX400-AA	4	5 1/2	2 1/2	2 3/4
CX450-AA	4 1/2	5 5/8	2 3/4	2 13/16
CX500-AA	5	6 3/4	3	3 3/8
CX600-AA	6	6 7/8	3 1/4	3 15/16

© 2011, AFL, all rights reserved. PP-3-00300, Rev 1, 10.24.18
Specifications are subject to change without notice.

DOSSERT®

TYPE DEC-AA, DEC-G-AA

Dead End Clamp

Dead ending strain clamp for stranded cable.

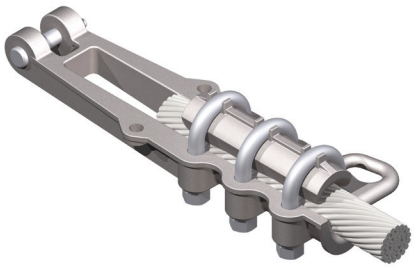

DEC-AA

Material

Aluminum Alloy

Hardware

Galvanized steel U-bolts, nuts, clevis pin, stainless steel cotter pin and lockwashers.

Notes

For a socket eye add suffix "-SO" to end of catalog number.
EX: DEC159A-AA-SO

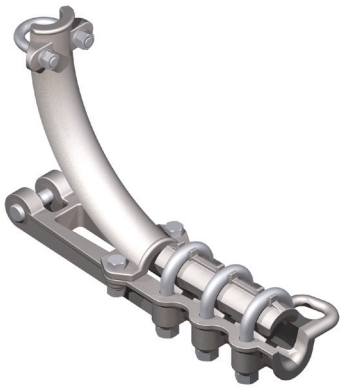

DEC-G-AA

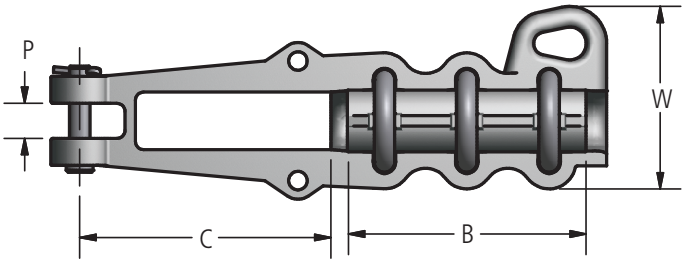

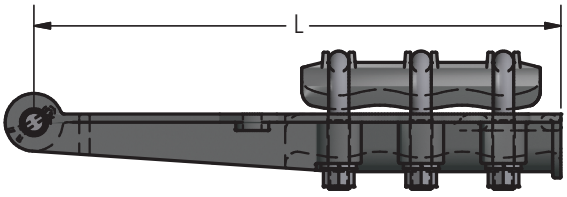

Ordering Information

CATALOG NUMBER		CABLE SIZE		NUMBER OF U-BOLTS	DIMENSIONS IN INCHES				
DEC-AA	DEC-G-AA	MIN	MAX		B	C	L	P	W
DEC26A-AA	DEC26A-G-AA	#4STR ACSR	266.5 MCM ACSR	2	3 3/4	3 9/16	9 5/8	11/16	3 1/2
DEC50-AA	DEC50-G-AA	4/O AAC	500 MCM AAC	2	3 1/4	4 13/16	9 5/8	11/16	2 3/4
DEC103A-AA	DEC103A-G-AA	477 MCM ACSR	1033.5 MCM ACSR	3	6 1/4	5 3/8	13 5/8	15/16	5
DEC159A-AA	DEC159A-G-AA	715.5 MCM ACSR	1800 MCM AAC	2	6 1/4	7 1/4	14 7/8	1 1/16	5 3/16
DEC200-AA	DEC200-G-AA	1500 MCM AAC	2000 MCM AAC	3	7 1/4	7 5/8	16	1 1/16	5 1/2

© 2010, AFL, all rights reserved. PP-3-00306, Revision 2, 3.28.14
Specifications are subject to change without notice.

DOSSERT®

TYPE SEC-A-2U-AA

Straight Dead End Clamp with Pulling Eye

Material

Aluminum Alloy

Hardware

Galvanized steel bolts, nuts, and lockwashers.

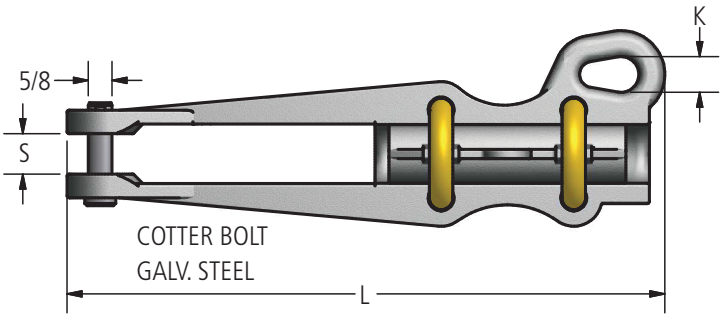

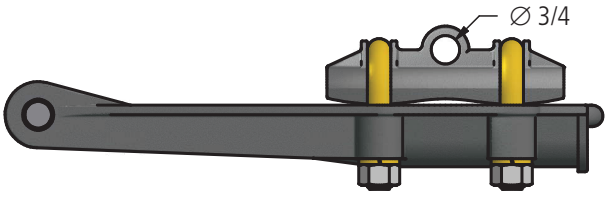

Ordering Information

CATALOG NUMBER	CABLE RANGE AAC		CABLE RANGE ACSR		DIAMETER		DIMENSIONS IN INCHES			BOLT SIZE
	MIN	MAX	MIN	MAX	MIN	MAX	K	L	S	
SEC13A-2U	6 STR	2/0 STR	6	2/0	.184	.460	7/8	8 5/16	11/16	3/8
SEC26A-2U	2 STR	266.8 MCM	4	266.8 MCM	.247	.642	7/8	9 5/8	11/16	1/2
SEC34A-2U	3/0	350 MCM	3/0	336.4 MCM	.464	.741	7/8	9 3/4	13/16	1/2
SEC48A-2U	4/0	556.5 MCM	3/0	477 MCM	.522	.858	7/8	9 3/4	13/16	1/2
SEC64A-2U	300 MCM	795 MCM	266.8 MCM	666 MCM	.626	1.026	15/16	11	1 1/16	1/2
SEC111A-2U	600 MCM	1272 MCM	556.5 MCM	1113 MCM	.879	1.300	15/16	12 5/8	1 1/16	1/2
SEC159A-2U	750 MCM	1800 MCM	715.5 MCM	1590 MCM	.987	1.548	15/16	14 7/8	1 1/16	5/8

© 2011, AFL, all rights reserved. PP-3-00455, Revision 3, 3.28.14
Specifications are subject to change without notice.

DOSSERT®

TYPE SEC-AA, SEC-P-AA

Dead End Clamp

The SEC-AA is a straight dead end clamp with no pulling eye. The SEC-P-AA is a dead end clamp with a pulling eye.

SEC-AA

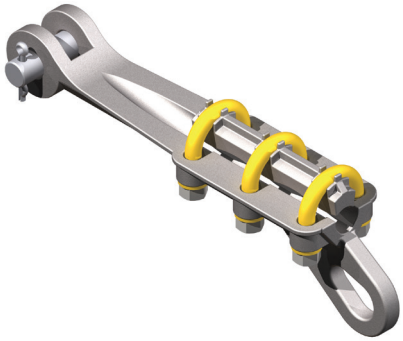

SEC-P-AA

Material

Aluminum Alloy

Hardware

Yellow anodized aluminum U-bolts, nuts and lockwashers.
Galvanized steel clevis pin, stainless steel cotter pin.

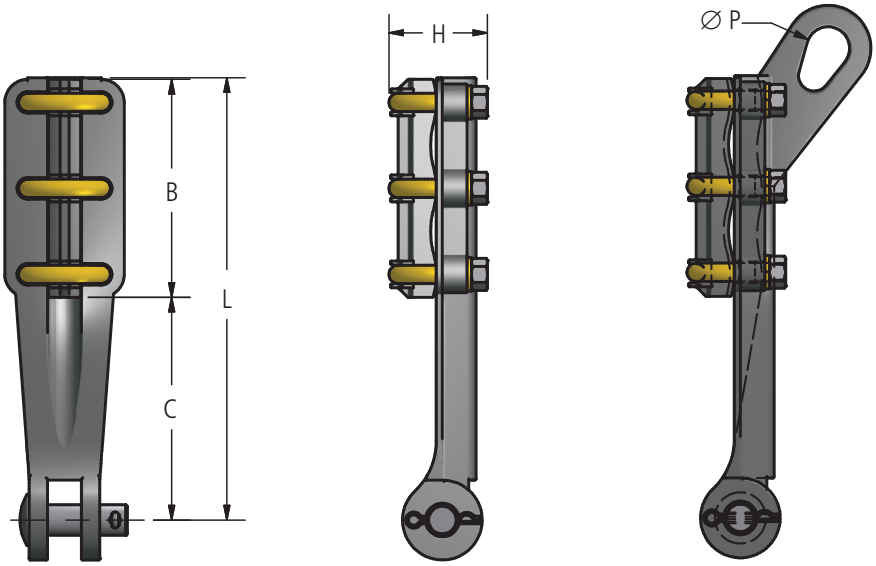

Ordering Information

CATALOG NUMBER		CONDUCTOR RANGE AAC		DIMENSIONS IN INCHES					U-BOLT SIZE
SEC-AA	SEC-P-AA	MIN	MAX	B	C	H	L	P	
SEC21-AA	SEC21-P-AA	1 STR	4/0 STR	5 1/4	4 3/8	2 1/8	9 5/8	7/8	3/8
SEC35-AA	SEC35-P-AA	4/0 STR	350 MCM	5 3/8	4 3/8	2 5/8	9 3/4	1	3/8
SEC50-AA	SEC50-P-AA	350 MCM	500 MCM	5 3/4	4 5/8	2 3/4	10 3/8	1 1/8	1/2
SEC100-AA	SEC100-P-AA	500 MCM	1000 MCM	6 1/4	5	3 1/2	11 1/4	1 1/4	1/2
SEC103-AA	SEC103-P-AA	500 MCM	1033.5 ACSR	6 1/4	7 1/2	3 1/2	13 3/4	1 1/4	1/2
—	SEC200-P-AA	1500 MCM	2000 MCM	6 1/4	8	4 1/4	14 1/4	1 1/4	5/8
SEC216-AA	—	1590 MCM	2156 MCM	6 1/8	3 1/2	4 1/16	10 9/16	-	1/2

© 2011, AFL, all rights reserved. PP-3-00456, Revision 2, 4.11.2022
Specifications are subject to change without notice.

DOSSERT®

TYPE EP-AA, EP-30-AA, EP-45-AA, EP-60-AA

Clamp Type Elbow For Tubular Bus

A clamp type elbow for connecting standard pipe size tubular buses at 30, 45, 60, and 90 degree angles to each other. Conductor bearing areas are accurately machine finished with a special surface to provide good electrical contact and high pull-out strength.

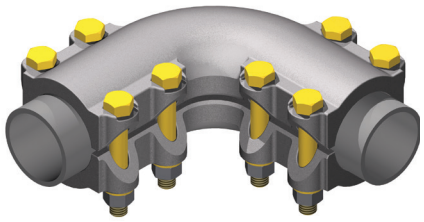

EP-AA

Material

Aluminum Alloy

Hardware

Yellow anodized aluminum bolts, nuts, and lockwashers.

Example

Example: For a 2" SPS Pipe, 30 degree angle, order EP200-30-AA.

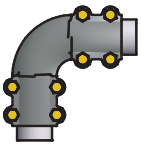

EP-90-AA
90 DEGREES

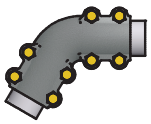

EP-60-AA
60 DEGREES

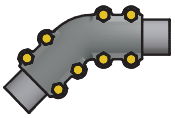

EP-45-AA
45 DEGREES

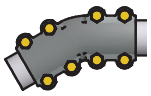

EP-30-AA
30 DEGREES

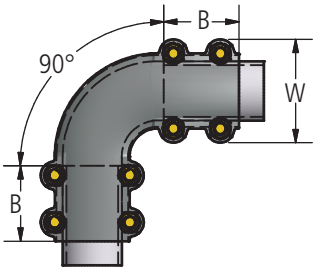

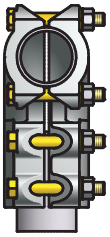

Ordering Information

CATALOG NUMBER				SPS	DIMENSIONS IN INCHES		BOLT SIZE	NUMBER OF BOLTS
EP-AA	EP-60-AA	EP-45-AA	EP-30-AA		B	W		
EP50-AA	EP50-60-AA	EP50-45-AA	EP50-30-AA	1/2	3	2 5/8	1/2	8
EP75-AA	EP75-60-AA	EP75-45-AA	EP75-30-AA	3/4	2 3/4	2 3/4	1/2	8
EP100-AA	EP100-60-AA	EP100-45-AA	EP100-30-AA	1	2 3/4	3 1/16	1/2	8
EP125-AA	EP125-60-AA	EP125-45-AA	EP125-30-AA	1 1/4	3	3 7/16	1/2	8
EP150-AA	EP150-60-AA	EP150-45-AA	EP150-30-AA	1 1/2	3	3 11/16	1/2	8
EP200-AA	EP200-60-AA	EP200-45-AA	EP200-30-AA	2	3 1/4	4 1/4	1/2	8
EP250-AA	EP250-60-AA	EP250-45-AA	EP250-30-AA	2 1/2	3 1/4	4 5/8	1/2	8
EP300-AA	EP300-60-AA	EP300-45-AA	EP300-30-AA	3	3 3/4	5 5/8	5/8	8
EP350-AA	EP350-60-AA	EP350-45-AA	EP350-30-AA	3 1/2	3 3/4	6 1/8	5/8	8
EP400-AA	EP400-60-AA	EP400-45-AA	EP400-30-AA	4	3 3/4	6 5/8	5/8	8
EP500-AA	EP500-60-AA	EP500-45-AA	EP500-30-AA	5	6	7 11/16	5/8	12
EP600-AA	EP600-60-AA	EP600-45-AA	EP600-30-AA	6	6	8 3/4	5/8	12

© 2010, AFL, all rights reserved. PP-3-00328, Revision 1, 2.11.16
Specifications are subject to change without notice.

DOSSERT®

TYPE BS-AA

Alumnium Bar Spacer

An aluminum spacer for a standard bus bar spacing of 1/4 inch. Designed for use with both A and H clamps.

Material

Aluminum Alloy

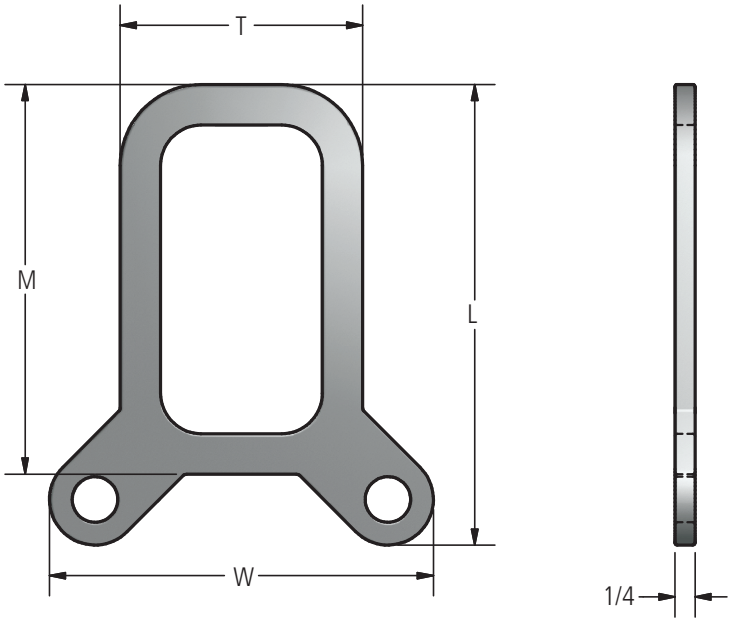

Ordering Information

CATALOG NUMBER	WIDTH OF BUSES		DIMENSIONS IN INCHES		
	M	T	L	W	BOLT SIZE
BS11-AA	1	1	1 5/8	2 5/16	3/8
BS21-AA	2	1	2 5/8	2 5/16	3/8
BS22-AA	2	2	2 5/8	3 5/16	3/8
BS31-AA	3	1	3 5/8	2 5/16	3/8
BS32-AA	3	2	3 5/8	3 5/16	3/8
BS33-AA	3	3	3 5/8	4 5/16	3/8
BS42-AA	4	2	4 5/8	3 5/16	3/8
BS43-AA	4	3	4 3/4	4 3/4	1/2
BS44-AA	4	4	4 3/4	5 3/4	1/2
BS52-AA	5	2	5 3/4	3 5/8	1/2
BS53-AA	5	3	5 3/4	4 3/4	1/2
BS54-AA	5	4	5 3/4	5 3/4	1/2
BS55-AA	5	5	5 7/8	7 1/8	5/8
BS62-AA	6	2	6 3/4	3 5/8	1/2
BS63-AA	6	3	6 3/4	4 3/4	1/2
BS64-AA	6	4	6 3/4	5 3/4	1/2
BS65-AA	6	5	6 7/8	7 1/8	5/8
BS66-AA	6	6	6 7/8	8 1/8	5/8

© 2010, AFL, all rights reserved. PP-3-00258, Revision 0, 11.09.10
Specifications are subject to change without notice.

DOSSERT®

TYPE DA-AA

Connectors For Bus Bar Alignment And Coupling

Ruggedly constructed, this connector permits the coupling or aligning of bus while securing high uniform contact pressure between surfaces.

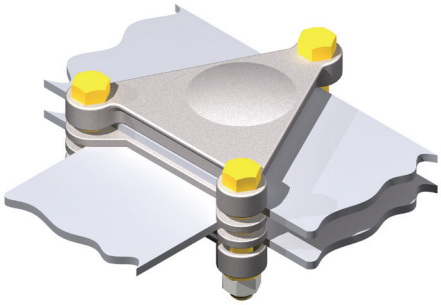

Material

Aluminum Alloy

Hareware

Yellow anodized aluminum bolts, nuts and lockwashers.

Notes

Unless otherwise specified clamps are provided with bolts of sufficient length to clamp three 1/4" bars (3/4" total thickness). For proper length of bolts specify total number of 1/4" bars and spacers to be clamped or combined thickness or bar and spacer lay up to be clamped. For spacers see BS-AA page 277.

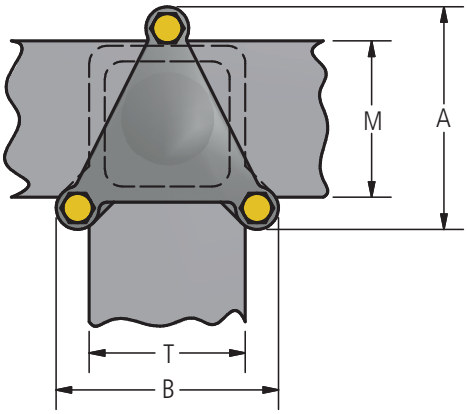

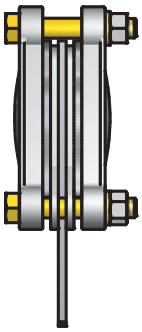

Ordering Information

CATALOG NUMBER	DIMENSIONS IN INCHES		FLAT BUS SIZE		BOLT SIZE
	A	B	M	T	
DA11-AA	2 5/16	2 5/16	1	1	3/8
DA21-AA	3 5/16	2 5/16	2	1	3/8
DA22-AA	3 5/16	3 5/16	2	2	3/8
DA31-AA	4 5/16	2 5/16	3	1	3/8
DA32-AA	4 5/16	3 5/16	3	2	3/8
DA33-AA	4 5/16	4 5/16	3	3	3/8
DA42-AA	5 5/16	3 5/16	4	2	3/8
DA43-AA	5 3/4	4 3/4	4	3	1/2
DA44-AA	5 3/4	5 3/4	4	4	1/2
DA52-AA	6 3/4	3 3/4	5	2	1/2
DA53-AA	6 3/4	4 3/4	5	3	1/2
DA54-AA	6 3/4	5 3/4	5	4	1/2
DA55-AA	7 1/8	7 1/8	5	5	5/8
DA62-AA	7 3/4	3 3/4	6	2	1/2
DA63-AA	7 3/4	4 3/4	6	3	1/2
DA64-AA	7 3/4	5 3/4	6	4	1/2
DA65-AA	8 1/8	7 1/8	6	5	5/8
DA66-AA	8 1/8	8 1/8	6	6	5/8

© 2010, AFL, all rights reserved. PP-3-00304, Revision 0, 11.09.10
Specifications are subject to change without notice.

DOSSERT®

TYPE DH-AA

Flat Bar H Clamp

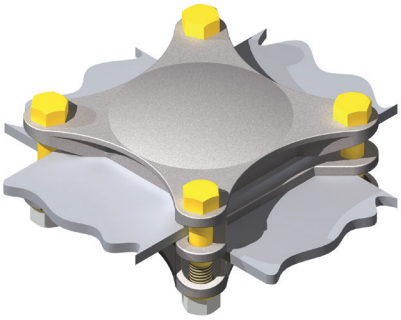

A clamp for developing high contact pressures between flat aluminum bus bars. For aligning, coupling, crossing and tapping conductors.

Material

Aluminum Alloy

Hardware

Yellow anodized aluminum bolts, nuts and lockwashers.

Notes

Unless otherwise specified clamps are provided with bolts of sufficient length to clamp three 1/4" bars (3/4" total thickness). For proper length of bolts specify total number of 1/4" bars and spacers to be clamped or combined thickness or bar and spacer lay up to be clamped. For spacers see BS-AA page 277.

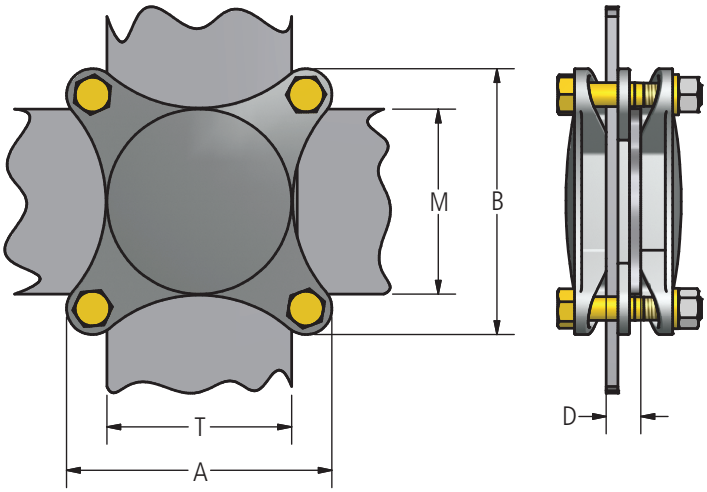

Ordering Information

CATALOG NUMBER	DIMENSIONS IN INCHES			WIDTH OF BARS		BOLT SIZE
	A	B	D	M	T	
DH11-AA	2 3/4	2 3/4	3/4	1	1	1/2
DH21-AA	3 3/4	2 3/4	3/4	2	1	1/2
DH22-AA	3 5/16	3 5/16	3/4	2	2	3/8
DH31-AA	4 3/4	2 3/4	3/4	3	1	1/2
DH32-AA	3 5/16	4 5/16	3/4	3	2	3/8
DH33-AA	4 5/16	4 5/16	1 1/4	3	3	3/8
DH42-AA	3 5/16	5 5/16	1 1/4	4	2	3/8
DH43-AA	4 3/4	5 3/4	1 1/4	4	3	1/2
DH44-AA	5 3/4	5 3/4	1 1/4	4	4	1/2
DH52-AA	3 3/4	6 3/4	1 1/4	5	2	1/2
DH53-AA	4 3/4	6 3/4	1 1/4	5	3	1/2
DH54-AA	5 3/4	6 3/4	1 1/4	5	4	1/2
DH55-AA	7 1/8	7 1/8	1 1/4	5	5	5/8
DH62-AA	3 3/4	7 3/4	1 1/4	6	2	1/2
DH63-AA	4 3/4	7 3/4	1 1/4	6	3	1/2
DH64-AA	5 3/4	7 3/4	1 1/4	6	4	1/2
DH65-AA	7 1/8	8 1/8	1 1/4	6	5	5/8
DH66-AA	8 1/8	8 1/8	1 1/4	6	6	5/8

© 2010, AFL, all rights reserved. PP-3-00311, Revision 0, 11.09.10
Specifications are subject to change without notice.

230 kV Aluminum Bolted Ground Clamps

DOSSERT®

TYPE GA-AA, GAA-AA

Two Conductor Flat Bar Ground Clamp

A two piece ground clamp for clamping two wires or cables to a flat bar, plate, or structural member. Permits a slight range of variability in accommodating different size conductors. Bolts are retained by body to enable assembling with only one wrench. Bolts are supplied to clamp a 1/4 Inch bar.

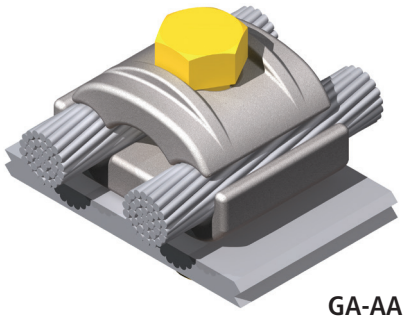

GA-AA

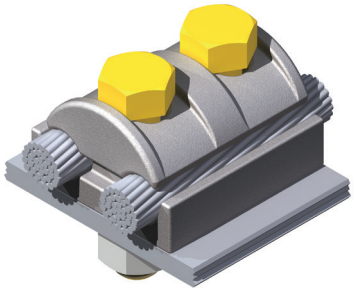

GAA-AA

Material

Aluminum Alloy

Hardware

Yellow anodized aluminum bolts, nuts, and lockwashers.

Note

Bolt length supplied to clamp a 1/4" bar with maximum conductor in place. To obtain longer bolt add thickness of bar to the CAT.#. EX: For 1/2" thick bar order: GA13-T1/2-AA

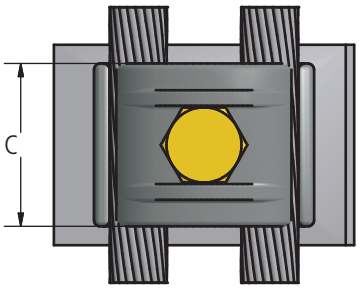

GA-AA

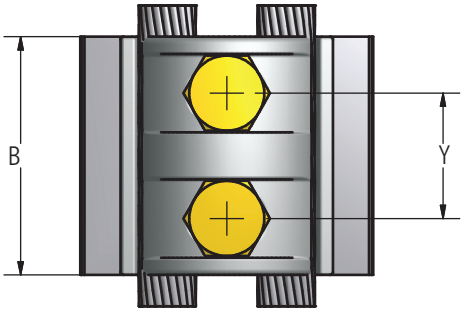

GAA-AA

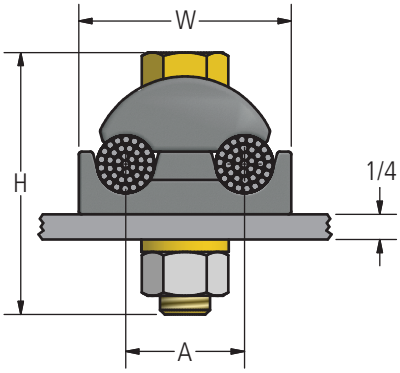

Ordering Information

CATALOG NUMBER		CABLE RANGE AAC		DIMENSIONS IN INCHES						BOLT SIZE
GA-AA	GAA-AA	MIN	MAX	A	B	C	H	W	Y	
GA4-AA	GAA4-AA	8 SOL	4 STR	3/4	2	1 3/8	1 3/8	1 1/4	15/16	3/8
GA13-AA	GAA13-AA	4 SOL	2/0 STR	1	2	1 1/2	1 1/2	1 11/16	1	3/8
GA25-AA	GAA25-AA	2/0 SOL	250 MCM	1 1/4	2 1/2	1 3/4	2 1/4	2 1/4	1 1/4	1/2
GA50-AA	GAA50-AA	300 MCM	500 MCM	1 1/2	2 1/2	2	2 3/4	2 1/2	1 3/8	1/2
GA75-AA	GAA75-AA	550 MCM	750 MCM	1 3/4	3	2 3/8	3	3 1/4	1 9/16	5/8
GA100-AA	GAA100-AA	800 MCM	1000 MCM	2	3	2 1/2	3 1/4	3 5/8	1 9/16	5/8

© 2010, AFL, all rights reserved. PP-3-00335, Revision 1, 3.29.2023
Specifications are subject to change without notice.

DOSSERT®

TYPE GD-AA

Pipe Ground Clamp

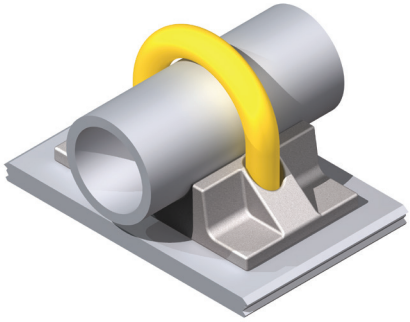

Material

Aluminum Alloy

Hardware

Yellow anodized aluminum U-bolts, nuts, and lockwashers.

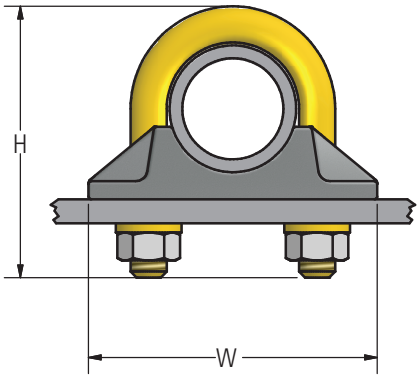

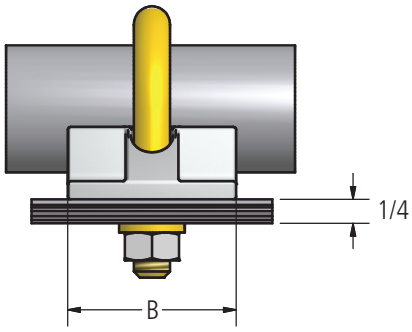

Ordering Information

CATALOG NUMBER	GROUND		DIMENSIONS IN INCHES			U-BOLT SIZE
	SPS	ROD	B	H	W	
GD25-AA	1/4	1/2	1-1/4	1-15/16	1-7/8	3/8
GD38-AA	3/8	5/8 - 3/4	1-1/4	2-1/16	2	3/8
GD75-AA	1/2 - 3/4	7/8 - 1	1-1/2	2-7/16	2-1/2	3/8
GD100-AA	1	1 - 1/4	1-3/4	2-9/16	2-5/8	3/8
GD125-AA	1-1/4	1-1/2 - 1-5/8	1-3/4	3-1/8	3	3/8
GD150-AA	1-1/2	1-3/4	2	3-3/8	3-3/16	3/8
GD200-AA	2	2-1/4 - 2-3/8	2	3-7/8	3-11/16	3/8
GD250-AA	2-1/2	2-3/4 - 2-7/8	2	4-1/4	4-3/16	3/8
GD300-AA	3	3-3/8 - 3-1/2	2-1/2	5-1/4	5-3/16	1/2
GD350-AA	3-1/2	3-7/8 - 4	2-1/2	5-3/4	5-11/16	1/2
GD400-AA	4	4-3/8 - 4-1/2	2-5/8	6-7/8	6-3/16	1/2

© 2010, AFL, all rights reserved. PP-3-00341, Revision 0, 11.09.10
Specifications are subject to change without notice.

DOSSERT®

TYPE GF-AA

Pipe Ground Clamp

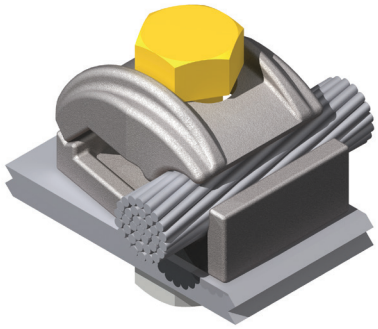

A ground clamp for grounding a cable or wire to a flat bar, plate or flat structural steel member. The bolt is retained by the cap to enable assembly with only one wrench.

Material

Aluminum Alloy

Hardware

Yellow anodized aluminum bolts, nuts, and lockwashers.

Note

Bolt length supplied to clamp a 1/4" bar with maximum conductor in place. To obtain longer bolt add thickness of bar to the CAT.#. EX: For 1/2" thick bar order: GF13-T1/2-AA

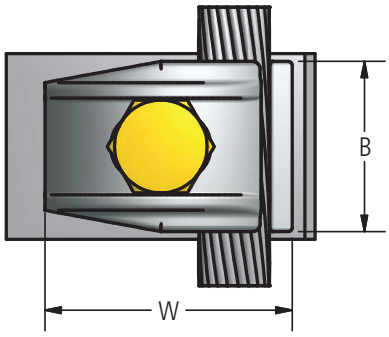

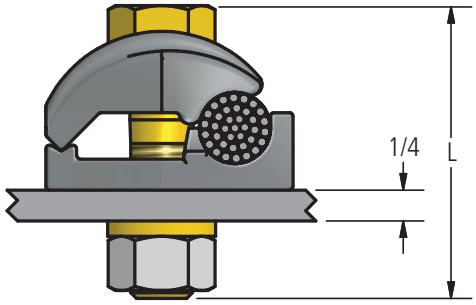

Ordering Information

CATALOG NUMBER	CONDUCTOR RANGE AAC		DIMENSIONS IN INCHES			BOLT SIZE
	MIN	MAX	B	L	W	
GF4-AA	8 Solid	4 Stranded	1	1 15/16	1 7/16	3/8
GF13-AA	4 Solid	2/0 Stranded	1 1/8	1 15/16	1 9/16	3/8
GF25-AA	2/0 Solid	250 MCM	1 3/8	2 1/4	2	1/2
GF30-AA	4 Solid	300 MCM	1 3/8	2 1/2	2 1/4	1/2
GF50-AA	300 MCM	500 MCM	1 1/2	2 3/4	2 7/16	1/2
GF75-AA	550 MCM	750 MCM	1 5/8	3 1/4	2 7/8	5/8
GF100-AA	800 MCM	1000 MCM	1 3/4	3 1/2	3 3/16	5/8

© 2010, AFL, all rights reserved. PP-3-00344, Revision 0, 11.09.10
Specifications are subject to change without notice.

DOSSERT®

TYPE GPC-AA

Pipe Ground Clamp

The ground clamp can be used to clamp cable parallel or perpendicular to the ground pipe.

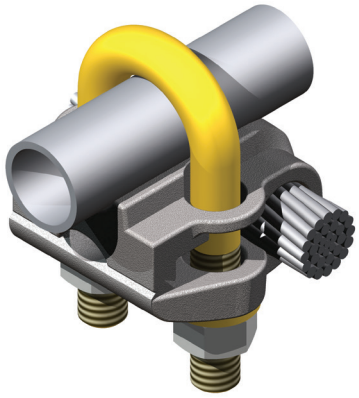

Material

Aluminum Alloy

Hardware

Yellow anodized aluminum nuts, U-bolts and lockwashers.

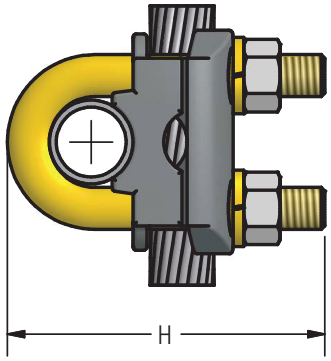

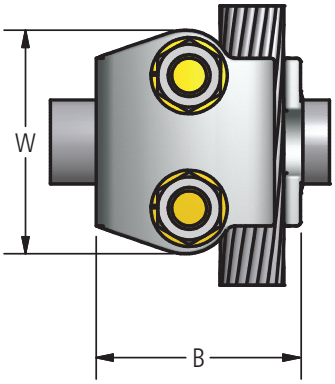

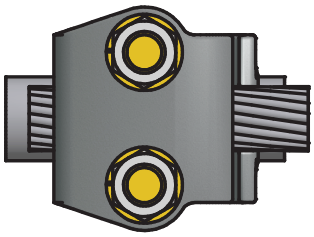

Ordering Information

CATALOG NUMBER	ROD	SPS	CABLE RANGE AAC		DIMENSIONS IN INCHES			U-BOLT SIZE
			MIN	MAX	B	H	W	
GPC25-4-AA	1/2	1/4	8 SOL	4 STR	1 7/16	2 7/16	1 7/8	3/8
GPC25-13-AA	1/2	1/4	4 SOL	2/0 STR	1 5/8	2 7/16	1 7/8	3/8
GPC25-25-AA	1/2	1/4	2/0 SOL	250 MCM	1 7/8	2 1/2	1 7/8	3/8
GPC38-4-AA	5/8 or 3/4	3/8	8 SOL	4 STR	1 7/16	2 1/2	2	3/8
GPC38-13-AA	5/8 or 3/4	3/8	4 SOL	2/0 STR	1 5/8	2 25/32	2 1/16	3/8
GPC38-25-AA	5/8 or 3/4	3/8	2/0 SOL	250 MCM	1 7/8	2 3/4	2	3/8
GPC38-50-AA	5/8 or 3/4	3/8	300 MCM	500MCM	2 3/8	3 1/4	2 3/8	1/2
GPC75-4-AA	1	1/2 or 3/4	8 SOL	4 STR	1 7/16	2 9/16	2 3/8	3/8
GPC75-13-AA	1	1/2 or 3/4	4 SOL	2/0 STR	1 5/8	2 3/4	2 3/8	3/8
GPC75-25-AA	1	1/2 or 3/4	2/0 SOL	250 MCM	1 7/8	2 7/8	2 3/8	3/8
GPC75-50-AA	1	1/2 or 3/4	300 MCM	500MCM	2 3/8	3 1/2	2 3/4	1/2
GPC75-75-AA	1	1/2 or 3/4	500 MCM	750 MCM	2 5/8	3 3/4	2 3/4	1/2
GPC100-4-AA	–	1	8 SOL	4 STR	1 7/16	2 3/4	2 5/8	3/8
GPC100-13-AA	–	1	4 SOL	2/0 STR	1 5/8	3 1/4	2 5/8	3/8
GPC100-25-AA	–	1	2/0 SOL	250 MCM	1 7/8	3 1/4	2 5/8	3/8
GPC100-50-AA	–	1	300 MCM	500 MCM	2 3/8	3 3/4	3	1/2
GPC100-75-AA	–	1	500 MCM	750 MCM	2 21/32	4 7/16	3 1/8	1/2
GPC100-100-AA	–	1	750 MCM	1000 MCM	2 7/8	4 1/4	3	1/2
GPC3875-AA	5/8 or 3/4	3/8	500 MCM	750 MCM	2 5/8	4	2 3/4	1/2
GPC125-4-AA	–	1 1/4	8 SOL	4 STR	1 7/16	3 1/4	3	3/8
GPC125-13-AA	–	1 1/4	4 SOL	2/0 MCM	1 5/8	3 9/16	3	3/8
GPC125-25-AA	–	1 1/4	2/0 SOL	250 MCM	1 7/8	3 5/8	3	3/8
GPC125-50-AA	–	1 1/4	300 MCM	500 MCM	2 3/8	4 1/16	3 3/8	1/2
GPC125-75-AA	–	1 1/4	500 MCM	750 MCM	2 3/4	4 11/16	3 3/8	1/2
GPC125-100-AA	–	1 1/4	750 MCM	1000 MCM	3 1/16	4 7/8	3 3/4	5/8

© 2010, AFL, all rights reserved. PP-3-00350, Revision 2, 9.30.2021
Specifications are subject to change without notice.

230 kV Aluminum Bolted Ground Clamps

DOSSERT®

TYPE GPC-AA

Pipe Ground Clamp

Ordering Information

CATALOG NUMBER	ROD	SPS	CABLE RANGE AAC		DIMENSIONS IN INCHES			U-BOLT SIZE
			MIN	MAX	B	H	W	
GPC150-4-AA	–	1 1/2	8 SOL	4 STR	1 7/8	3 7/16	3 1/4	3/8
GPC150-13-AA	–	1 1/2	4 SOL	2/0 STR	1 5/8	3 7/8	3 1/4	3/8
GPC150-25-AA	–	1 1/2	2/0 SOL	250 MCM	1 7/8	4	3 1/4	3/8
GPC150-50-AA	–	1 1/2	300 MCM	500 MCM	2 3/8	4 5/16	3 5/8	1/2
GPC150-75-AA	–	1 1/2	500 MCM	750 MCM	2 3/4	4 15/16	3 5/8	1/2
GPC150-100-AA	–	1 1/2	750 MCM	1000 MCM	3 1/16	5 1/16	4	5/8
GPC200-4-AA	–	2	8 SOL	4 STR	1 7/16	3 7/8	3 11/16	3/8
GPC200-13-AA	–	2	4 SOL	2/0 STR	1 5/8	4 1/4	3 11/16	3/8
GPC200-25-AA	–	2	2/0 SOL	250 MCM	1 7/8	4 7/16	3 11/16	3/8
GPC200-50-AA	–	2	300 MCM	500 MCM	2 3/8	4 3/4	4 1/16	1/2
GPC200-75-AA	–	2	500 MCM	750 MCM	2 3/4	5 5/8	4 1/16	1/2
GPC200-100-AA	–	2	750 MCM	1000 MCM	3 1/16	5 1/2	4 7/16	5/8
GPC250-4-AA	–	2 1/2	8 SOL	4 STR	1 7/16	4 3/8	4 3/16	3/8
GPC250-13-AA	–	2 1/2	4 SOL	2/0 STR	1 5/8	4 3/4	4 3/16	3/8
GPC250-25-AA	–	2 1/2	2/0 SOL	250 MCM	1 7/8	4 7/8	4 3/16	3/8
GPC250-50-AA	–	2 1/2	300 MCM	500 MCM	2 3/8	5 1/4	4 9/16	1/2
GPC250-75-AA	–	2 1/2	500 MCM	750 MCM	2 3/4	5 7/8	4 15/16	1/2
GPC250-100-AA	–	2 1/2	750 MCM	1000 MCM	3 1/16	6	4 13/16	5/8
GPC300-4-AA	–	3	8 SOL	4 STR	1 7/16	5	4 13/16	3/8
GPC300-13-AA	–	3	4 SOL	2/0 STR	1 5/8	5 3/8	4 13/16	3/8
GPC300-25-AA	–	3	2/0 SOL	250 MCM	1 7/8	5 1/2	5 3/16	3/8
GPC300-50-AA	–	3	300 MCM	500 MCM	2 3/8	5 3/4	5 3/16	1/2
GPC300-75-AA	–	3	500 MCM	750 MCM	2 3/4	6 1/2	5 9/16	1/2
GPC300-100-AA	–	3	750 MCM	1000 MCM	3 1/16	6 5/8	5 5/16	5/8
GPC350-4-AA	–	3 1/2	8 SOL	4 STR	1 7/16	5 1/2	5 5/16	3/8
GPC350-13-AA	–	3 1/2	4 SOL	2/0 STR	1 5/8	5 7/8	5 5/16	3/8
GPC350-25-AA	–	3 1/2	2/0 SOL	250 MCM	1 7/8	6	5 11/16	3/8
GPC350-50-AA	–	3 1/2	300 MCM	500 MCM	2 3/8	6 1/4	5 11/16	1/2
GPC350-75-AA	–	3 1/2	500 MCM	750 MCM	2 3/4	7	6 1/16	1/2
GPC350-100-AA	–	3 1/2	750 MCM	1000 MCM	3 1/16	7 1/8	5 13/16	5/8
GPC400-4-AA	–	4	8 SOL	4 STR	1 7/16	6	5 13/16	3/8
GPC400-13-AA	–	4	4 SOL	2/0 STR	1 5/8	6 3/8	5 13/16	3/8
GPC400-25-AA	–	4	2/0 SOL	250 MCM	1 7/8	6 1/2	6 3/16	3/8
GPC400-50-AA	–	4	300 MCM	500 MCM	2 3/8	6 3/4	6 3/16	1/2
GPC400-75-AA	–	4	500 MCM	750 MCM	2 3/4	7 1/2	6 3/16	1/2
GPC400-100-AA	–	4	750 MCM	1000 MCM	3 1/16	7 5/8	6 3/8	5/8
GPC450-4-AA	–	4 1/2	8 SOL	4 STR	1 7/16	6 1/2	6 3/8	3/8
GPC450-13-AA	–	4 1/2	4 SOL	2/0 STR	1 5/8	6 3/4	6 3/8	3/8
GPC450-25-AA	–	4 1/2	2/0 SOL	250 MCM	1 7/8	7	6 3/4	3/8
GPC450-50-AA	–	4 1/2	300 MCM	500 MCM	2 3/8	7 1/4	6 3/4	1/2
GPC450-75-AA	–	4 1/2	500 MCM	750 MCM	2 3/4	8	7 3/16	1/2
GPC450-100-AA	–	4 1/2	750 MCM	1000 MCM	3 1/16	8 1/8	6 7/8	5/8
GPC500-4-AA	–	5	8 SOL	4 STR	1 7/16	7 1/16	6 7/8	3/8
GPC500-13-AA	–	5	4 SOL	2/0 STR	1 5/8	7 5/16	6 7/8	3/8
GPC500-25-AA	–	5	2/0 SOL	250 MCM	1 7/8	7 9/16	7 1/4	3/8
GPC500-50-AA	–	5	300 MCM	500 MCM	2 3/8	7 13/16	7 1/4	1/2
GPC500-75-AA	–	5	500 MCM	750 MCM	2 3/4	5 9/16	7 1/4	1/2
GPC500-100-AA	–	5	750 MCM	1000 MCM	3 1/16	8 11/16	7 5/8	5/8

© 2010, AFL, all rights reserved. PP-3-00350, Revision 2, 9.30.2021
Specifications are subject to change without notice.

DOSSERT®

TYPE GS-AA

Ground Clamp for 2 Cables to Perpendicular Pipe

Ground clamp is designed to clamp two cables to pipe.

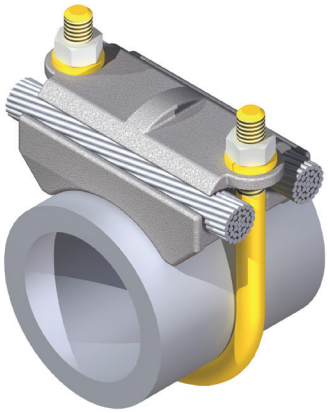

Material

Aluminum Alloy

Hardware

Yellow anodized aluminum nuts, U-bolt and lockwashers.

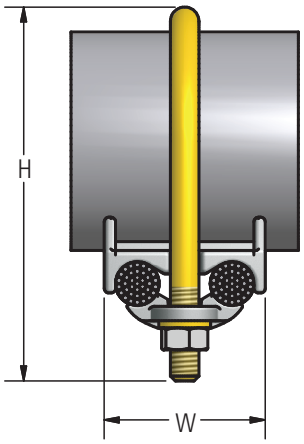

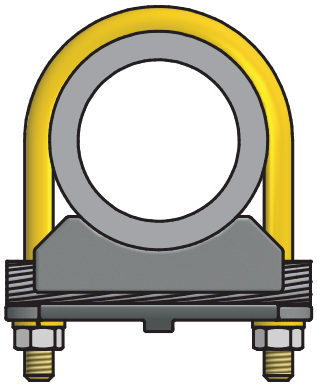

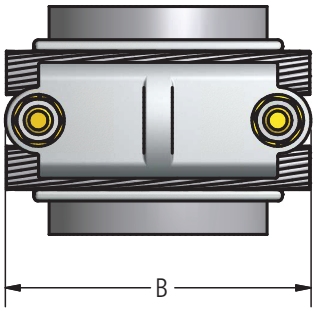

Ordering Information

CATALOG NUMBER	ROD	SPS	CABLE RANGE		DIMENSIONS IN INCHES			U-BOLT SIZE
			MIN	MAX	B	H	W	
GS25-4-AA	1/2	1/4	8 SOL	4 STR	1-13/16	2-1/8	1-7/16	3/8
GS25-13-AA	1/2	1/4	4 SOL	2/0 STR	1-13/16	2-1/4	1-7/8	3/8
GS25-25-AA	1/2	1/4	2/0 SOL	250 MCM	1-13/16	2-7/16	2	3/8
GS38-4-AA	5/8 or 3/4	3/8	8 SOL	4 STR	2	2-5/16	1-7/16	3/8
GS38-13-AA	5/8 or 3/4	3/8	4 SOL	2/0 STR	2	2-1/2	1-7/8	3/8
GS38-25-AA	5/8 or 3/4	3/8	2/0 SOL	250 MCM	2	2-5/8	2	3/8
GS38-50-AA	5/8 or 3/4	3/8	300 MCM	500 MCM	2-1/2	3-3/16	2-3/8	1/2
GS75-4-AA	7/8 or 1	1/2 or 3/4	8 SOL	4 STR	2-3/8	2-3/4	1-7/16	3/8
GS75-13-AA	7/8 or 1	1/2 or 3/4	4 SOL	2/0 STR	2-3/8	2-15/16	1-7/8	3/8
GS75-25-AA	7/8 or 1	1/2 or 3/4	2/0 SOL	250 MCM	2-3/8	3-1/16	2-3/16	3/8
GS75-50-AA	7/8 or 1	1/2 or 3/4	300 MCM	500 MCM	2-7/8	3-1/2	2-7/8	1/2
GS100-4-AA	-	1	8 SOL	4 STR	2-5/8	3-1/16	1-7/16	3/8
GS100-13-AA	-	1	4 SOL	2/0 STR	2-5/8	3-3/16	1-7/8	3/8
GS100-25-AA	-	1	2/0 SOL	250 MCM	2-5/8	3-3/8	2-3/16	3/8
GS100-50-AA	-	1	300 MCM	500 MCM	3-1/8	3-15/16	2-7/8	1/2
GS100-75-AA	-	1	500 MCM	750 MCM	3-1/8	4-1/8	3-1/4	1/2

© 2010, AFL, all rights reserved. PP-3-00359, Revision 0, 11.09.10
Specifications are subject to change without notice.

DOSSERT®

TYPE GW-AA

Grounding Clamp for 2 Cables to Pipe in Parallel

Ground clamp is designed to clamp two cables to pipe.

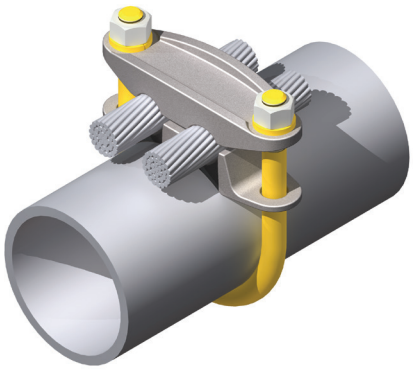

Material

Aluminum Alloy

Hardware

Yellow anodized aluminum nuts, U-bolt and lockwashers.

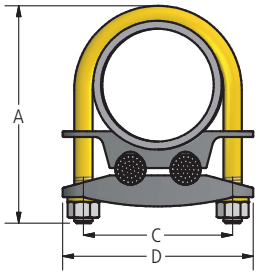

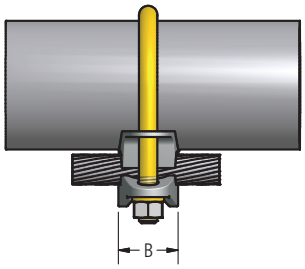

Ordering Information

CATALOG NUMBER	GROUND ROD	SPS	CONDUCTOR RANGE ACC		U-BOLT SIZE	DIMENSIONS IN INCHES			
			MIN	MAX		A	B	C	D
GW75-4-AA	7/8 or 1	3/4	#8 Sol.	#4 Str.	3/8	-	-	-	-
GW75-13-AA	7/8 or 1	3/4	#4 Sol.	2/0 Str.	3/8	-	-	-	-
GW75-25-AA	7/8 or 1	3/4	2/0 Sol.	250 MCM	3/8	-	-	-	-
GW75-50-AA	7/8 or 1	3/4	300 MCM	500 MCM	3/8	-	-	-	-
GW100-4-AA	1 1/8-1 1/4	1	#8 Sol.	#4 Str.	3/8	2 7/8	1 1/8	1 3/4	2 9/16
GW100-13-AA	1 1/8-1 1/4	1	#4 Sol.	2/0 Str.	3/8	3	1 1/8	1 3/4	2 9/16
GW100-25-AA	1 1/8-1 1/4	1	2/0 Sol.	250 MCM	3/8	3 3/8	1 1/8	1 3/4	2 9/16
GW125-4-AA	1 3/8- 1 5/8	1 1/4	#8 Sol.	#4 Str.	3/8	3 3/16	1 3/8	2 1/8	3
GW125-13-AA	1 3/8- 1 5/8	1 1/4	#4 Sol.	2/0 Str.	3/8	3 3/8	1 3/8	2 1/8	3
GW125-25-AA	1 3/8- 1 5/8	1 1/4	2/0 Sol.	250 MCM	3/8	3 5/8	1 7/16	2 1/8	3
GW150-4-AA	1 5/8- 1 7/8	1 1/2	#8 Sol.	#4 Str.	3/8	3 1/2	1 3/8	2 3/8	3 1/4
GW150-13-AA	1 5/8- 1 7/8	1 1/2	#4 Sol.	2/0 Str.	3/8	3 11/16	1 3/8	2 3/8	3 1/4
GW150-25-AA	1 5/8- 1 7/8	1 1/2	2/0 Sol.	250 MCM	3/8	3 3/4	1 7/16	2 3/8	3 1/4
GW150-50-AA	1 5/8- 1 7/8	1 1/2	300 MCM	500 MCM	1/2	4 3/8	1 9/16	2 1/2	3 1/4
GW200-4-AA	2- 2 1/2	2	#8 Sol.	#4 Str.	3/8	4	1 3/8	2 13/16	3 5/8
GW200-13-AA	2- 2 1/2	2	#4 Sol.	2/0 Str.	3/8	4 3/8	1 3/8	2 13/16	3 5/8
GW200-25-AA	2- 2 1/2	2	2/0 Sol.	250 MCM	3/8	4 1/2	1 7/16	2 13/16	3 5/8
GW200-50-AA	2- 2 1/2	2	300 MCM	500 MCM	1/2	4 7/8	1 9/16	2 15/16	4
GW250-4-AA	2 5/8-2 7/8	2 1/2	#8 Sol.	#4 Str.	3/8	4 1/2	1 3/8	3 5/16	4 3/16
GW250-13-AA	2 5/8-2 7/8	2 1/2	#4 Sol.	2/0 Str.	3/8	4 3/4	1 3/8	3 5/16	4 3/16
GW250-25-AA	2 5/8-2 7/8	2 1/2	2/0 Sol.	250 MCM	3/8	4 7/8	1 7/16	3 5/16	4 3/16
GW250-50-AA	2 5/8-2 7/8	2 1/2	300 MCM	500 MCM	1/2	5 1/4	1 9/16	3 7/16	4 5/8
GW300-13-AA	3 1/4- 3 1/2	3	#4 Sol.	2/0 Str.	3/8	5 7/16	1 3/8	4	4 7/8
GW300-25-AA	3 1/4- 3 1/2	3	2/0 Sol.	250 MCM	3/8	5 9/16	1 7/16	4	4 7/8
GW300-50-AA	3 1/4- 3 1/2	3	300 MCM	500 MCM	1/2	5 7/8	1 9/16	4 1/8	5 3/16
GW350-4-AA	3 3/4- 4	3 1/2	#8 Sol.	#4 Str.	3/8	5 5/8	1 1/2	4 7/16	5 3/8
GW350-13-AA	3 3/4- 4	3 1/2	#4 Sol.	2/0 Str.	3/8	5 7/8	1 1/2	4 7/16	5 3/8
GW350-25-AA	3 3/4- 4	3 1/2	2/0 Sol.	250 MCM	3/8	6 1/8	1 1/2	4 7/16	5 3/8
GW350-50-AA	3 3/4- 4	3 1/2	300 MCM	500 MCM	1/2	6 3/8	1 5/8	4 9/16	5 3/4
GW400-4-AA	4 1/4- 4 1/2	4	#8 Sol.	#4 Str.	3/8	6 1/8	1 5/8	4 15/16	5 7/8
GW400-13-AA	4 1/4- 4 1/2	4	#4 Sol.	2/0 Str.	3/8	6 1/4	1 5/8	4 15/16	5 7/8
GW400-25-AA	4 1/4- 4 1/2	4	2/0 Sol.	250 MCM	3/8	6 1/2	1 5/8	4 15/16	5 7/8
GW400-50-AA	4 1/4- 4 1/2	4	300 MCM	500 MCM	1/2	6 7/8	1 5/8	5 1/16	6 3/16

© 2010, AFL, all rights reserved. PP-3-00363, Revision 0, 11.09.10
Specifications are subject to change without notice.

DOSSERT®

TYPE GCHV-AA

Cable Grounding Clamp

Designed to de-energize cable for maintenance.

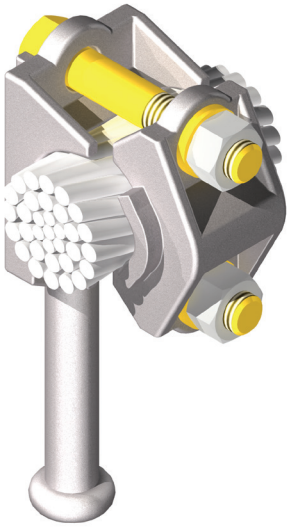

Material

Aluminum Alloy

Hardware

Yellow anodized aluminum bolts, nuts, and lockwashers.

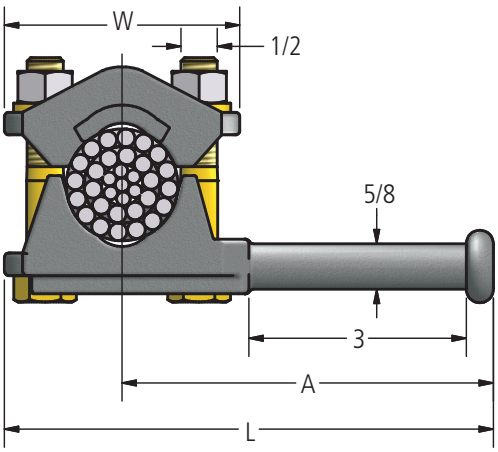

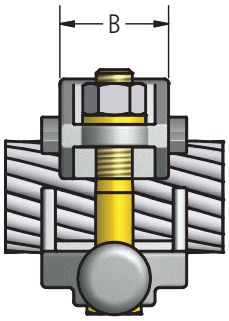

Ordering Information

CATALOG NUMBER	CABLE RANGE		DIMENSIONS			
	MIN	MAX	A	B	L	W
GCHV-40-62R-AA	1/0 STR	400 MCM	4 11/16	1 1/2	5 13/16	2 1/4
GCHV-159A-62R-AA	477 MCM	1590 ACSR	5 1/8	2	6 3/4	3 1/4
GCHV-287A-62R-AA	1780 ACSR	2870 ACSR	5 3/8	2	7 1/4	3 3/4

© 2011, AFL, all rights reserved. PP-3-00339. Revision 0, 1.19.11
Specifications are subject to change without notice.

DOSSERT®

TYPE GPH-AA

Ground Clamp

Designed to de-energize bus tube for maintenance. Stud is designed with tee shape for use on different bus sizes.

Material

Aluminum Alloy

Hardware

Aluminum bolts, nuts, and lockwashers.

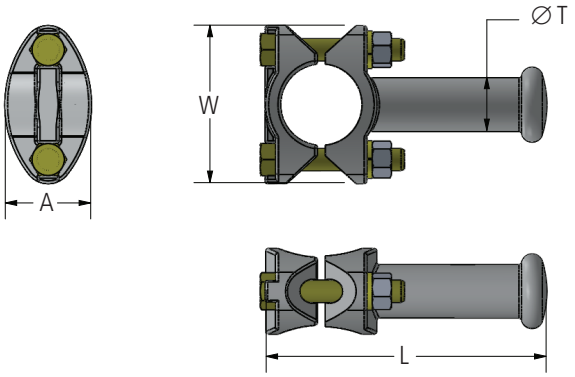

FIGURE 1

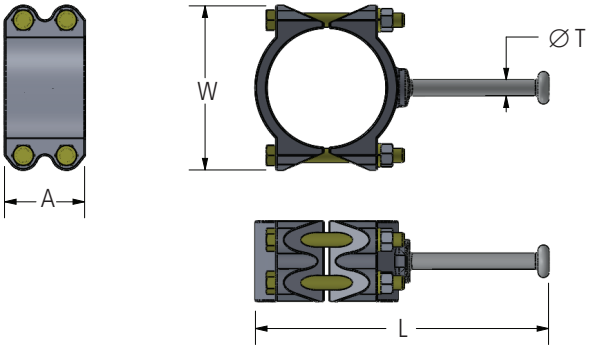

FIGURE 2

Ordering Information

CATALOG NO.	FIGURE NO.	SPS	DIMENSIONS				BOLT SIZE
			A	L	T	W	
GPH150-AA	1	1 1/2	2	6 9/16	1 1/4	3 11/16	1/2
GPH200-AA	1	2	2	7 1/4	1 1/4	4 5/16	1/2
GPH250-AA	1	2 1/2	2	7 9/16	1 1/4	4 3/4	1/2
GPH300-AA	1	3	2	8 1/4	1 1/4	5 3/8	1/2
GPH350-AA	1	3 1/2	2	8 15/16	1 1/4	5 7/8	1/2
GPH400-AA	1	4	2	9 1/4	1 1/4	6 3/8	1/2
GPH500-AA	2	5	3 3/4	13 3/4	3/4	7 11/16	5/8
GPH600-AA	2	6	4	14 11/16	3/4	8 3/4	5/8

© 2011, AFL, all rights reserved. PP-3-00354, Revision 3, 3.21.18
Specifications are subject to change without notice.

DOSSERT®
TYPE GPH-N-AA

Terminal pad to grounding stud.

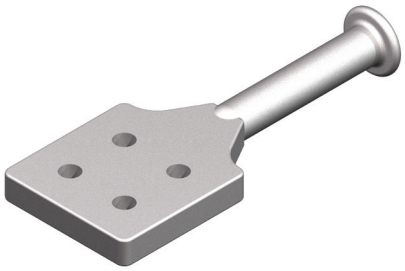

Material
Aluminum Alloy

Note
Other pad configurations can be ordered by contacting Customer Service.

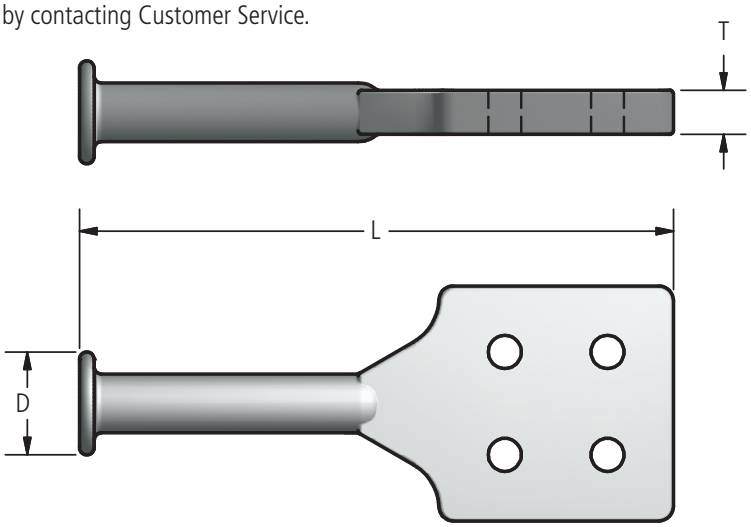

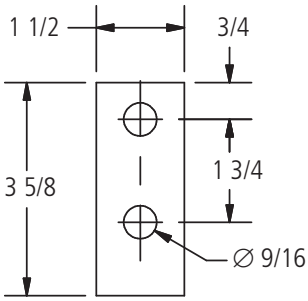

FIG. 1

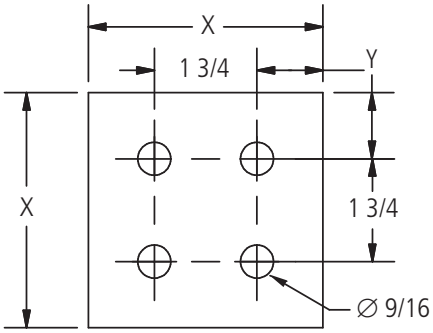

FIG. 2

Ordering Information

CATALOG NUMBER	FIGURE NUMBER	DIMENSIONS				
		D	L	T	X	Y
GPH-2N-AA	1	1 1/4	8 5/8	1/2	—	—
GPH-4N-AA	2	1 3/4	9 1/8	3/4	3	5/8
GPH-4N4-AA	2	1 3/4	10 1/8	3/4	4	1 1/8

© 2011, AFL, all rights reserved. PP-3-00355, Revision 2, 10.23.17
Specifications are subject to change without notice.

230 kV Aluminum Bolted Parallel Clamps

DOSSERT®

TYPE AC, ACA

Parallel Clamp

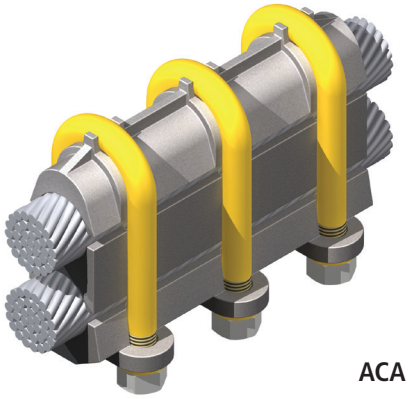

ACA

Material

Aluminum Alloy

Hardware

AC Galvanized steel U-bolts, nuts, and lockwashers.

ACA Yellow anodized aluminum U-bolts, nuts, and lockwashers.

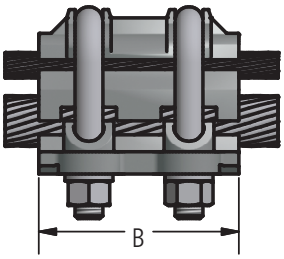

FIG. 1

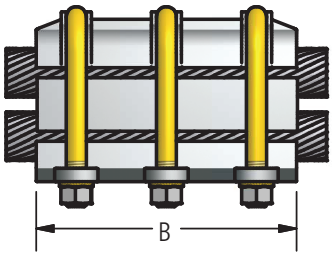

FIG. 2

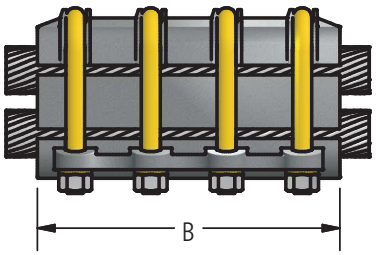

FIG. 3

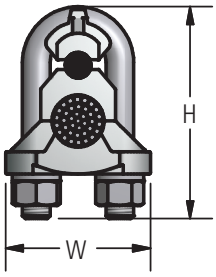

Ordering Information

CATALOG NUMBER		FIG. NO.	ACSR RANGE				ALUMINUM RANGE				DIMENSIONS IN INCHES			BOLT SIZE
			MAIN		TAP		MAIN		TAP					
AC	ACA		MIN	MAX	MIN	MAX	MIN	MAX	MIN	MAX	B	H	W	
AC401	ACA401	1	#2 SOL	1/0 STR	#2 SOL	1/0 STR	#2 SOL	2/0 STR	#2 SOL	2/0 STR	3	3 1/4	2 3/8	1/2
AC402	ACA402	1	2/0 STR	3/0 STR	#2 SOL	1/0 STR	3/0 STR	4/0 STR	#2 SOL	2/0 STR	3 3/8	3 1/2	2 3/8	1/2
AC403	ACA403	1	2/0 STR	3/0 STR	2/0 STR	3/0 STR	3/0 STR	4/0 STR	3/0 STR	4/0 STR	3 3/8	3 1/2	2 3/8	1/2
AC404	ACA404	1	3/0 STR	300 MCM	#2 SOL	1/0 STR	4/0 STR	350 MCM	#2 SOL	2/0 STR	3 5/8	3 5/8	2 1/2	1/2
AC405	ACA405	1	3/0 STR	300 MCM	2/0 STR	3/0 STR	4/0 STR	350 MCM	3/0 STR	4/0 STR	3 5/8	3 7/8	2 1/2	1/2
AC406	ACA406	1	3/0 STR	300 MCM	3/0 STR	300 MCM	4/0 STR	350 MCM	4/0 STR	350 MCM	3 5/8	3 7/8	2 1/2	1/2
AC407	ACA407	1	300 MCM	397.5 MCM	#2 SOL	1/0 STR	350 MCM	477 MCM	#2 SOL	2/0 STR	3 7/8	4 3/8	3	5/8
AC408	ACA408	1	300 MCM	397.5 MCM	2/0 STR	3/0 STR	350 MCM	477 MCM	3/0 STR	4/0 STR	3 7/8	4 3/8	3	5/8
AC409	ACA409	1	300 MCM	397.5 MCM	3/0 STR	300 MCM	350 MCM	477 MCM	4/0 STR	350 MCM	3 7/8	4 5/8	3	5/8
AC410	ACA410	1	300 MCM	397.5 MCM	300 MCM	397.5 MCM	350 MCM	477 MCM	350 MCM	477 MCM	3 7/8	4 5/8	3	5/8
AC411	ACA411	1	397.5 MCM	605 MCM	2/0 STR	3/0 STR	500 MCM	715.5 MCM	500 MCM	715.5 MCM	4 3/8	4 3/4	3 1/8	5/8
AC412	ACA412	1	397.5 MCM	605 MCM	3/0 STR	300 MCM	500 MCM	715.5 MCM	4/0 STR	350 MCM	4 3/8	4 3/4	3 1/8	5/8
AC413	ACA413	1	397.5 MCM	605 MCM	300 MCM	397.5 MCM	500 MCM	715.5 MCM	350 MCM	477 MCM	4 3/8	5	3 1/8	5/8
AC414	ACA414	1	397.5 MCM	605 MCM	397.5 MCM	605 MCM	500 MCM	715.5 MCM	500 MCM	715.5 MCM	4 3/8	5	3 1/8	5/8
AC415	ACA415	1	605 MCM	900 MCM	3/0 STR	300 MCM	750 MCM	1033.5 MCM	4/0 STR	350 MCM	4 3/4	5 1/8	3 3/8	5/8
AC416	ACA416	1	605 MCM	900 MCM	300 MCM	397.5 MCM	750 MCM	1033.5 MCM	350 MCM	477 MCM	4 3/4	5 1/8	3 3/8	5/8
AC417	ACA417	1	605 MCM	900 MCM	397.5 MCM	605 MCM	750 MCM	1033.5 MCM	500 MCM	715.5 MCM	4 3/4	5 1/2	3 3/8	5/8
AC418	ACA418	1	605 MCM	900 MCM	605 MCM	900 MCM	750 MCM	1033.5 MCM	750 MCM	1033.5 MCM	4 3/4	5 1/2	3 3/8	5/8
AC418S	ACA418S	1	477 MCM	636.4 MCM	2/0 STR	336.4 MCM	477 MCM	795 MCM	477 MCM	795 MCM	4 3/4	4 7/8	3 1/8	5/8
AC450	ACA450	1	1/0 STR	336.4 MCM	1/0 STR	336.4 MCM	1/0 STR	397.5 MCM	1/0 STR	397.5 MCM	3 5/8	4 3/16	2 1/2	1/2

continued →

© 2011, AFL, all rights reserved. PP-3-00206. Revision 4, 7.14.2022
Specifications are subject to change without notice.

DOSSERT®

TYPE AC, ACA

Parallel Clamp

Ordering Information

CATALOG NUMBER		FIG. NO.	ACSR RANGE				ALUMINUM RANGE				DIMENSIONS IN INCHES			BOLT SIZE
			MAIN		TAP		MAIN		TAP					
AC	ACA		MIN	MAX	MIN	MAX	MIN	MAX	MIN	MAX	B	H	W	
AC460	ACA460	1	300 MCM	795 MCM	1/0 STR	336.4 MCM	336.4 MCM	954 MCM	1/0 STR	397.5 MCM	4 5/8	4 15/16	3 1/16	1/2
AC462	ACA462	1	336.4 MCM	795 MCM	110.8 MCM	447 MCM	397.5 MCM	954 MCM	3/0 STR	500 MCM	4 5/8	4 15/16	3 1/16	1/2
AC470	ACA470	1	300 MCM	795 MCM	300 MCM	795 MCM	336.4 MCM	954 MCM	336.4 MCM	954 MCM	4 5/8	5 9/16	3 7/32	5/8
AC480	ACA480	1	795 MCM	1033.5 MCM	795 MCM	1033.5 MCM	800 MCM	1113 MCM	800 MCM	1113 MCM	4 5/8	5 3/4	3 1/4	5/8
AC504	ACA504	2	397.5 MCM	605 MCM	397.5 MCM	605 MCM	500 MCM	715.5 MCM	500 MCM	715.5 MCM	5 7/8	5	3 1/8	5/8
AC505	ACA505	2	605 MCM	900 MCM	3/0 STR	300 MCM	750 MCM	1033.5 MCM	4/0 STR	350 MCM	6 3/4	5 1/8	3 3/8	5/8
AC506	ACA506	2	605 MCM	900 MCM	300 MCM	397.5 MCM	750 MCM	1033.5 MCM	350 MCM	477 MCM	6 3/4	5 1/8	3 3/8	5/8
AC507	ACA507	2	605 MCM	900 MCM	397.5 MCM	605 MCM	750 MCM	1033.5 MCM	500 MCM	715.5 MCM	6 3/4	5 1/2	3 3/8	5/8
AC508	ACA508	2	605 MCM	900 MCM	605 MCM	900 MCM	750 MCM	1033.5 MCM	750 MCM	1033.5 MCM	6 3/4	5 1/2	3 3/8	5/8
AC509	ACA509	2	954 MCM	1192.5 MCM	300 MCM	397.5 MCM	1113 MCM	1351.5 MCM	350 MCM	477 MCM	8	6	3 7/8	3/4
AC510	ACA510	2	954 MCM	1192.5 MCM	397.5 MCM	605 MCM	1113 MCM	1351.5 MCM	500 MCM	715.5 MCM	8	6	3 7/8	3/4
AC511	ACA511	2	954 MCM	1192.5 MCM	605 MCM	900 MCM	1113 MCM	1351.5 MCM	750 MCM	1033.5 MCM	8	6 3/8	3 7/8	5/8
AC512	ACA512	2	954 MCM	1192.5 MCM	954 MCM	1192.5 MCM	1113 MCM	1351.5 MCM	1113 MCM	1351.5 MCM	8	6 3/8	3 7/8	3/4
AC513	ACA513	2	1272 MCM	1590 MCM	397.5 MCM	605 MCM	1431 MCM	1750 MCM	500 MCM	715.5 MCM	9 3/4	6 5/16	4	3/4
AC514	ACA514	2	1272 MCM	1590 MCM	605 MCM	900 MCM	1431 MCM	1750 MCM	750 MCM	1033.5 MCM	9 3/4	6 5/8	4 1/8	3/4
AC515	ACA515	2	1272 MCM	1590 MCM	954 MCM	1192.5 MCM	1431 MCM	1750 MCM	1113 MCM	1351.5 MCM	9 3/4	7	4 1/8	3/4
AC516	ACA516	2	1033.5 MCM	1590 MCM	1033.5 MCM	1590 MCM	1033.5 MCM	1750 MCM	1033.5 MCM	1750 MCM	9 3/4	7	4 1/8	5/8
AC518	ACA518	2	1780 MCM	2300 MCM	605 MCM	1033.5 MCM	2000 MCM	2500 MCM	700 MCM	1192.5 MCM	9 3/4	6 1/2	4 5/16	5/8
AC520	ACA520	2	1780 MCM	2300 MCM	1780 MCM	2300 MCM	2000 MCM	2500 MCM	2000 MCM	2500 MCM	9 3/4	7 3/8	4 5/16	5/8
AC604	ACA604	3	336.4 MCM	397.5 MCM	336.4 MCM	397.5 MCM	350 MCM	477 MCM	350 MCM	477 MCM	7	4 1/2	2 1/2	1/2
AC605	ACA605	3	397.5 MCM	605 MCM	336.4 MCM	397.5 MCM	500 MCM	715.5 MCM	350 MCM	477 MCM	7	4 3/4	2 11/16	1/2
AC606	ACA606	3	397.5 MCM	605 MCM	397.5 MCM	605 MCM	500 MCM	715.5 MCM	500 MCM	715.5 MCM	7 1/2	4 3/4	2 11/16	1/2
AC607	ACA607	3	605 MCM	900 MCM	336.4 MCM	397.5 MCM	715.5 MCM	1033.5 MCM	350 MCM	477 MCM	7 1/2	4 7/8	2 15/16	1/2
AC608	ACA608	3	605 MCM	900 MCM	397.5 MCM	605 MCM	715.5 MCM	1033.5 MCM	500 MCM	715.5 MCM	7 1/2	4 7/8	2 15/16	1/2
AC609	ACA609	3	605 MCM	900 MCM	605 MCM	900 MCM	715.5 MCM	1033.5 MCM	715.5 MCM	1033.5 MCM	7 1/2	4 7/8	2 15/16	1/2
AC610	ACA610	3	954 MCM	1192.5 MCM	336.4 MCM	397.5 MCM	1000 MCM	1351.5 MCM	350 MCM	477 MCM	10	5 1/4	3 7/16	5/8
AC611	ACA611	3	954 MCM	1192.5 MCM	397.5 MCM	605 MCM	1000 MCM	1351.5 MCM	500 MCM	715.5 MCM	10	5 1/4	3 7/16	5/8
AC612	ACA612	3	954 MCM	1192.5 MCM	605 MCM	900 MCM	1000 MCM	1351.5 MCM	715.5 MCM	1033.5 MCM	10	5 3/4	3 7/16	5/8
AC613	ACA613	3	954 MCM	1192.5 MCM	954 MCM	1192.5 MCM	1000 MCM	1351.5 MCM	1000 MCM	1351.5 MCM	10	5 3/4	3 7/16	5/8
AC614	ACA614	3	1272 MCM	1590 MCM	336.4 MCM	397.5 MCM	1431 MCM	1750 MCM	350 MCM	477 MCM	10	5 3/8	3 5/8	5/8
AC615	ACA615	3	1272 MCM	1590 MCM	397.5 MCM	605 MCM	1431 MCM	1750 MCM	500 MCM	715.5 MCM	10	5 5/8	3 5/8	5/8
AC616	ACA616	3	1272 MCM	1590 MCM	605 MCM	900 MCM	1431 MCM	1750 MCM	715.5 MCM	1033.5 MCM	10	5 3/4	3 5/8	5/8
AC617	ACA617	3	1272 MCM	1590 MCM	954 MCM	1192.5 MCM	1431 MCM	1750 MCM	1000 MCM	1351.5 MCM	10	6	3 5/8	5/8
AC618	ACA618	3	1272 MCM	1590 MCM	1272 MCM	1590 MCM	1431 MCM	1750 MCM	1431 MCM	1750 MCM	10	6	3 5/8	5/8

© 2011, AFL, all rights reserved. PP-3-00206. Revision 4, 7.14.2022
Specifications are subject to change without notice.

DOSSERT®

TYPE AC100-AA

Parallel Connector

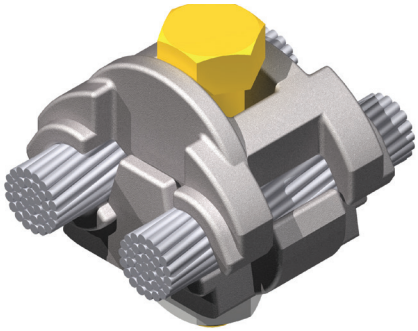

Single bolt type parrallel connector for joining two cables. Bolt retainer built into casting for one wrench installation.

Material

Aluminum Alloy

Hardware

ACA100 Series: Aluminum bolts, lockwashers and nuts
AC100 series: Galvanized steel bolts, lockwashers and nuts

Notes

1. For Stainless Belleville washers and add "-BW" to catalog number. EX: AC102-BW
2. For Electro Tin plate add "-SN" to catalog number. EX: ACA103-SN
3. For ALNOX prefilled connector add "-LP" to catalog number. EX: AC103-LP

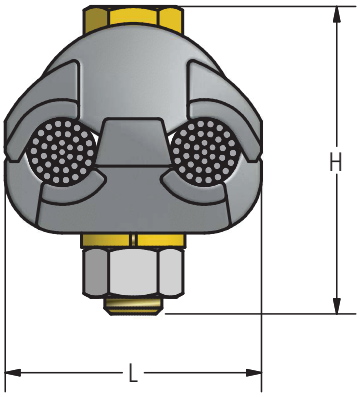

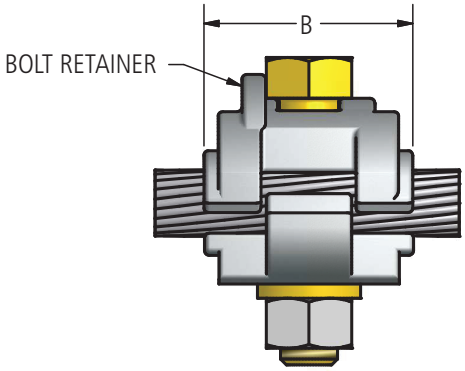

Ordering Information

CATALOG NUMBER		CABLE RANGE								DIMENSIONS IN INCHES			BOLT SIZE
		RUN				TAP							
		ACC		ACSR		ACC		ACSR		B	H	L	
AC100	ACA100	#8 SOL	1/0 STR	#8STR	1/0 ACSR	#8 SOL	1 STR	#8STR	#2 ACSR	1 1/8	1 15/16	1 3/8	5/16
AC101	ACA101	#8 SOL	1/0 STR	#8STR	1/0 ACSR	#8 SOL	1/0 STR	#8STR	1/0 ACSR	1 3/8	2	1 3/4	3/8
AC102	ACA102	#4 SOL	4/0 STR	#4STR	4/0 ACSR	#4 SOL	4/0 STR	#4STR	4/0 ACSR	2	2 5/8	2 1/8	1/2
AC103	ACA103	#4 SOL	350 MCM	#4STR	336.4 MCM ACSR	#8 SOL	2/0 STR	#8STR	2/0 ACSR	1 13/16	2 1/4	2 1/16	3/8
AC122	ACA122	#2 SOL	500 MCM	#2STR	397.5 MCM ACSR	#6 SOL	3/0 STR	#6STR	3/0 ACSR	2 1/4	2 3/4	2 3/8	1/2
AC124	ACA124	1/0 STR	1033.5 MCM	1/0 STR	954 MCM ACSR	#2 SOL	4/0 STR	#4STR	4/0 ACSR	2 9/16	2 3/8	3	5/8

© 2011, AFL, all rights reserved. PP-3-00207, Revision 1, 6.24.14
Specifications are subject to change without notice.

DOSSERT®

TYPE PC-AA

Connector For Two Cables In Parallel

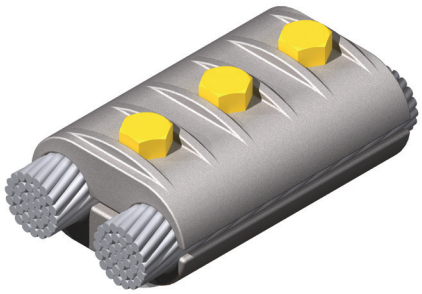

A clamp type connector for connecting two cable or wire conductors in parallel. Any combination accommodating unequal size cables is avaliable.

Material

Aluminum Alloy

Hardware

Yellow anodized aluminum bolts, nuts and lockwashers.

Notes

1. To order an unequal size cable clamp create a catalog number. EX: for a 636 MCM run and 300 MCM tap, order: PC65-30-AA.
2. For Galvanized steel hardware, add suffix "-GS" to catalog number order: PC65-30-AA-GS.
3. For Grade Five Galvanized Steel Hardware, add "-GS5" to catalog number. EX: PC25-25-AA-GS5

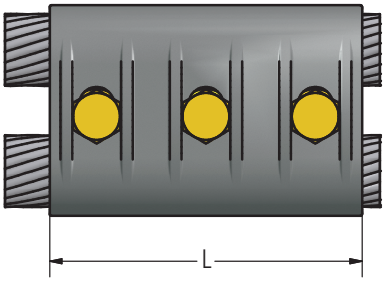

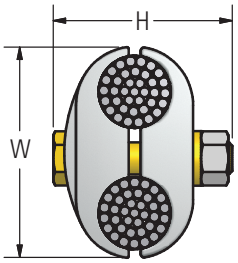

Ordering Information

CATALOG NUMBER	CONDUCTOR RANGE				DIMENSIONS IN INCHES			BOLT SIZE
	ACSR		ALUM. OR CU.					
	MIN	MAX	MIN	MAX	H	L	W	
PC10-10-AA	1(6/1)	80(8/1)	2/0 SOL	1/0 STR	1 3/4	3	1 17/32	1/2
PC13-13-AA	1/0(6/1)		3/0 SOL	2/0 STR	1 3/4	3	1 5/8	1/2
PC17-17-AA	2/0	110.8(12/7)	4/0 SOL	3/0 STR	2	4	1 27/32	1/2
PC21-21-AA	3/0	134.6(12/7)	4/0 STR		2	4	2 1/32	1/2
PC25-25-AA	4/0	203(8/7)	250 MCM	266.8 MCM	2 1/4	4	2 1/16	1/2
PC30-30-AA	176.9(12/7)	266.8(26/7)	300 MCM		2 1/4	4 1/2	2 9/32	1/2
PC35-35-AA	211.3(12/7)	336.4(18/1)	336.4 MCM	350 MCM	2 1/4	4 1/2	2 3/8	1/2
PC40-40-AA	203.2(16/19)	397.5(18/1)	394.5 MCM	400 MCM	2 1/2	5	2 1/2	1/2
PC50-50-AA	397.5(26/7)	477(18/1)	450 MCM	500 MCM	2 1/2	5	2 5/8	1/2
PC60-60-AA	477(24/7)	477(30/7)	550 MCM	600 MCM	2 1/2	5	2 27/32	1/2
PC65-65-AA	500(30/7)	636(36/1)	636 MCM	650 MCM	2 1/2	5	3	1/2
PC75-75-AA	605(26/7)	666.6(24/7)	700 MCM	750 MCM	2 1/2	5 1/4	3 1/16	1/2

continued →

© 2011, AFL, all rights reserved. PP-3-00392, Revision 1, 11.1.2023
Specifications are subject to change without notice.

DOSSERT®

TYPE PC-AA

Connector For Two Cables In Parallel

Ordering Information (cont.)

CATALOG NUMBER		CONDUCTOR RANGE				DIMENSIONS IN INCHES			BOLT SIZE
		ACSR		ALUM. OR CU.					
		MIN	MAX	MIN	MAX	H	L	W	
PC80-10-AA		1(6/1)	800 MCM	2/0 SOL	800 MCM	3 1/16	5 1/4	2 9/16	1/2
PC80-13-AA		1/0(6/1)	795(36/1)	3/0 SOL	800 MCM	3 1/16	5 1/4	2 9/16	1/2
PC80-80-AA		715.5(24/7,26/7)	795(36/1)	795 MCM	800 MCM	2 1/2	5 1/4	3 1/8	1/2
PC103-103-AA		795(24/7)	954(54/7)	900 MCM	1033.5 MCM	2 3/4	5 1/2	3 3/8	1/2
PC127-127-AA		1033.5(36/1)	1113(54/19)	1100 MCM	1272 MCM	3	5 1/2	3 5/8	1/2
PC150-150-AA		1192.5(45/7)	1351.5(54/19)	1300 MCM	1500 MCM	3 1/2	6	4 1/8	5/8
PC175-127-AA	Large Groove	1431(45/7)	1590(54/19)	1590 MCM	1750 MCM	3 7/8	6	4 3/8	1/2
	Small Groove	1033.5(36/1)	1113(54/19)	1100 MCM	1272 MCM				
PC175-175-AA		1431(45/7)	1590(54/19)	1590 MCM	1750 MCM	3 1/2	6	4 1/2	5/8
PC200-200-AA		1590(54/19)	1780(54/19)	1800 MCM	2000 MCM	3 1/2	6	4 1/2	5/8
PC250-250-AA		2156	2312	2250 MCM	2500 MCM	4 1/4	7 3/4	5 1/4	5/8
PC350-350-AA		–	–	3000 MCM	3500 MCM	3 1/2	6	5	5/8

© 2011, AFL, all rights reserved. PP-3-00392, Revision 1, 11.1.2023
Specifications are subject to change without notice.

DOSSERT®

TYPE TRV-AA

Parallel Connector

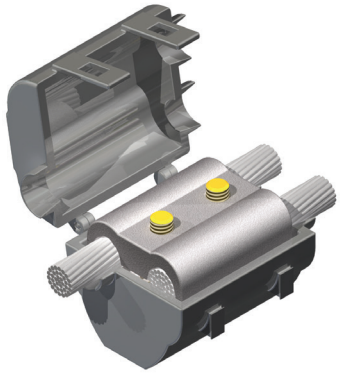

Connects a cable main parallel to a cable tap, features clamping members made of aluminum. The bolts, nuts and lockwashers are stainless steel to enhance clamping efficiency and resistance to corrosion. The assembly is encased in a plastic cover.

Material

Aluminum Alloy

Hardware

Stainless Steel bolts, Belleville spring washers, and Neoprene bolt retainers.

Cover

Black Polyethylene

Note

For conductor grooves coated with Alnox, order by adding prefix -LP.
EX: TRV10-10-AA-LP

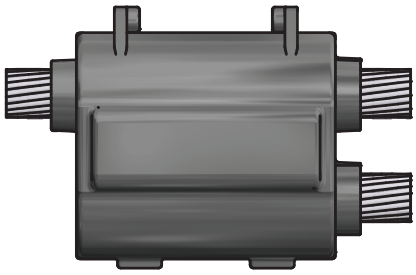

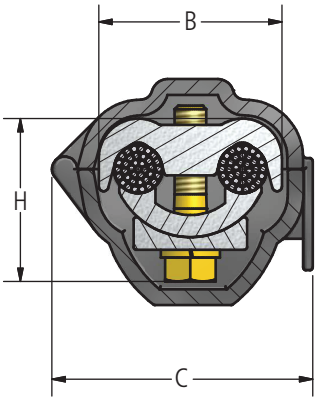

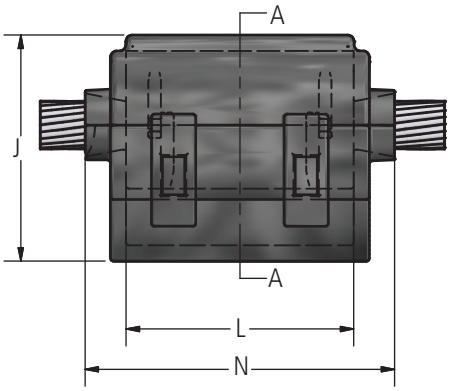

Ordering Information

CATALOG NUMBER	CABLE RANGE				DIMENSIONS IN INCHES						BOLT SIZE
	RUN		TAP								
	MIN	MAX	MIN	MAX	B	C	H	J	L	N	
TRV10-10-AA	#8	# 1/0	#8	# 1/0	1.500	2 11/32	1.370	1 25/32	1.620	2 5/8	5/16
TRV10-35-AA	#8	# 1/0	# 3/0	350	2.090	2 15/16	1.900	2 7/32	2.120	3 1/8	3/8
TRV17-10-AA	#4	# 3/0	#8	# 1/0	1.700	2 19/32	1.610	2 1/32	2.120	3 1/8	3/8
TRV17-17-AA	#4	# 3/0	#4	# 3/0	1.750	2 19/32	1.610	2 1/32	2.120	3 1/8	3/8
TRV35-10-AA	# 3/0	350	#8	# 1/0	2.090	2 15/16	1.900	2 7/32	2.120	3 1/8	3/8
TRV35-35-AA	# 3/0	350	# 3/0	350	2.310	3 5/32	1.910	2 1/4	2.120	3 1/8	3/8

© 2011, AFL, all rights reserved. PP-3-00484, Revision 0, 1.08.11
Specifications are subject to change without notice.

DOSSERT®

Distribution Parallel Groove Clamps
(Series 390 and 490)

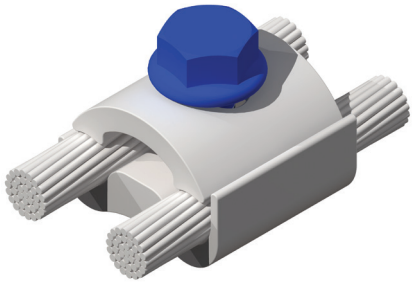

Catalog 390 and Catalog 490 Series Distribution Parallel Groove Clamps with a single bolt accomodate a range of conductors in each groove. This type of clamp is commonly used for service drop connections and as a tap from large to relatively small conductors.

Material

Aluminum Alloy

Hardware

Blue anodized bolt.

Notes

1. To order Parallel Groove Clamps prefilled with Alnox Compound, add P or W suffix to part number. See ordering information below.
2. The use of Alnox Compound liberally in grooves and on wire is recommended. Be sure conductors are clean. All conductors (new and old) should be thoroughly cleaned with a scratch brush or emery cloth.
3. Extensive field experience and exposure tests show that if a suitable type joint compound is liberally applied over and around the contact area, copper-to-aluminum electric connections can be made satisfactorily with aluminum clamps without copper bushings. Alnox Compound is recommended.

Ordering Information

CATALOG NUMBER	GROOVE SIZE		BOLT SIZE (IN)	TORQUE (FT-LBS)	NOMINAL WEIGHT (LBS)
	RUN 1	TAP 2			
490.0	0	0	5/16"	10	0.060
395.5	5	5	3/8"	15	0.092
396.6	6	6	3/8"	15	0.129
397.5	7	5	7/16"	20	0.179
392.6	2	6	1/2"	25	0.316
393.6	3	6	5/8"	40	0.642

Standard groove numbers are used for the complete range of clamps and connectors. These numbers are incorporated into the AFL part number itself.

GROOVE SIZE	GROOVE SIZE		CONDUCTOR SIZE			
	DIMENSIONS IN INCHES		ACSR		STRANDED ALUMINUM	
	MIN	MAX	MIN	MAX	MIN	MAX
0	0.128	0.325	6 6/1	2 7/1	8 & 8W	2
5	0.128	0.398	6 6/1	1/0	8 & 8W	1/0
6	0.162	0.464	6 6/1	2/0 6/1	6	3/0
1	0.292	0.502	2 6/1	3/0	2	3/0
7	0.368	0.593	1/0	4/0	1/0	266.8 MCM
2	0.464	0.743	3/0	397 18/1	3/0	400 MCM
3	0.743	1.152	397 18/1	795 26/7	450 MCM	1,000 MCM
4	1.060	1.545	795 45/7	1590 54/19	874.5 MCM	1,750 MCM

Notes

1. NEMA standard abbreviations for aluminum or copper: W = solid conductor, ACSR = aluminum conductor/steel reinforced

© 2011, AFL, all rights reserved. PP-3-00457, Revision 1, 3.1.18
Specifications are subject to change without notice.

DOSSERT®
Center Bolt Clamps Series 480

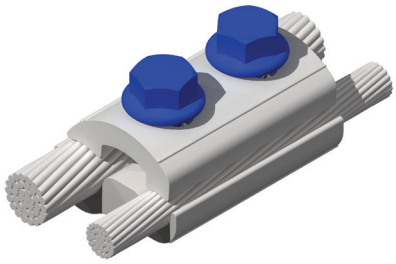

Catalog 480 Series Center Bolt Clamps are a multiple bolt heavy duty universal groove design which can handle the full electrical load of the conductor. They offer the convenience of installation without any loose parts. Catalog 480 Clamps are made from extruded high strength aluminum alloy and can be taped easily. Additionally, they have a minimum bulk, which results in a neat appearance.

Material
Aluminum Alloy

Hardware
Blue anodized bolt.

Notes
1. To order Parallel Groove Clamps prefilled with Alnox Compound, add P or W suffix to part number. See ordering information below.
2. The use of Alnox Compound liberally in grooves and on wire is recommended. Be sure conductors are clean. All conductors (new and old) should be thoroughly cleaned with a scratch brush or emery cloth.
3. Extensive field experience and exposure tests show that if a suitable type joint compound is liberally applied over and around the contact area, copper-to-aluminum electric connections can be made satisfactorily with aluminum clamps without copper bushings. Alnox Compound is recommended.

Ordering Information

CATALOG NUMBER	GROOVE SIZE		NUMBER OF BOLTS	BOLT SIZE (IN)	TORQUE (FT-LBS)	NOMINAL WEIGHT (LBS)
	RUN 1	TAP 2				
486.6	6	6	2	3/8"	15	0.2
481.0	1	0	2	3/8"	15	0.3
481.1	1	1	2	3/8"	15	0.3
482.1	2	1	2	1/2"	25	0.6
482.2	2	2	3	1/2"	25	1.1
483.2	3	2	2	5/8"	40	1.8
483.3	3	3	3	5/8"	40	2.8

Standard groove numbers are used for the complete range of clamps and connectors. These numbers are incorporated into the AFL part number itself.

GROOVE SIZE	GROOVE SIZE		CONDUCTOR SIZE			
	DIMENSIONS IN INCHES		ACSR		STRANDED ALUMINUM	
	MIN	MAX	MIN	MAX	MIN	MAX
0	0.128	0.325	6 6/1	2 7/1	8 & 8W	2
5	0.128	0.398	6 6/1	1/0	8 & 8W	1/0
6	0.162	0.464	6 6/1	2/0 6/1	6	3/0
1	0.292	0.502	2 6/1	3/0	2	3/0
7	0.368	0.593	1/0	4/0	1/0	266.8 MCM
2	0.464	0.743	3/0	397 18/1	3/0	400 MCM
3	0.743	1.152	397 18/1	795 26/7	450 MCM	1,000 MCM
4	1.060	1.545	795 45/7	1590 54/19	874.5 MCM	1,750 MCM

Notes
1. NEMA standard abbreviations for aluminum or copper: W = solid conductor, ACSR = aluminum conductor/steel reinforced

© 2011, AFL, all rights reserved. PP-3-00457, Revision 1, 3.1.18
Specifications are subject to change without notice.

DOSSERT®
U-Bolt Clamps Series 580

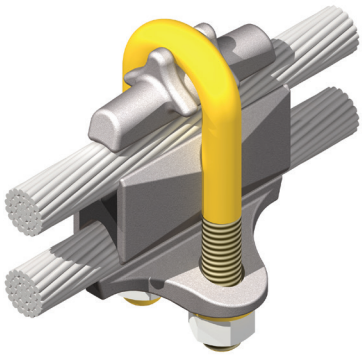

Catalog 580 Series U-Bolt Clamps are heavy duty, high efficiency connectors with AFL full-capacity grooves. The U-Bolts are high strength aluminum alloy for excellent thermal expansion and corrosion resistance characteristics.

Material
Aluminum Alloy

Hardware
Yellow anodized aluminum U-bolts, nuts and lockwashers.

Notes
1. To order Parallel Groove Clamps prefilled with Alnox Compound, add P or W suffix to part number. See ordering information below.
2. The use of Alnox Compound liberally in grooves and on wire is recommended. Be sure conductors are clean. All conductors (new and old) should be thoroughly cleaned with a scratch brush or emery cloth.
3. Extensive field experience and exposure tests show that if a suitable type joint compound is liberally applied over and around the contact area, copper-to-aluminum electric connections can be made satisfactorily with aluminum clamps without copper bushings. Alnox Compound is recommended.

Ordering Information

CATALOG NUMBER	GROOVE SIZE		NUMBER OF BOLTS	BOLT SIZE (IN)	TORQUE (FT-LBS)	NOMINAL WEIGHT (LBS)
	RUN 1	TAP 2				
581.1	1	1	1	3/8"	15	0.3
582.1	2	1	1	1/2"	25	0.6
582.2	2	2	2	1/2"	25	1.3
583.1	3	1	1	5/8"	40	1.1
583.2	3	2	2	5/8"	40	2.6
583.3	3	3	3	5/8"	40	3.9
584.1	4	1	1	5/8"	40	1.7
584.2	4	2	2	5/8"	40	3.6
584.3	4	3	3	5/8"	40	5.8
584.4	4	4	3	5/8"	40	6.0

Standard groove numbers are used for the complete range of clamps and connectors. These numbers are incorporated into the AFL part number itself.

GROOVE SIZE	GROOVE SIZE		CONDUCTOR SIZE			
	DIMENSIONS IN INCHES		ACSR		STRANDED ALUMINUM	
	MIN	MAX	MIN	MAX	MIN	MAX
0	0.128	0.325	6 6/1	2 7/1	8 & 8W	2
5	0.128	0.398	6 6/1	1/0	8 & 8W	1/0
6	0.162	0.464	6 6/1	2/0 6/1	6	3/0
1	0.292	0.502	2 6/1	3/0	2	3/0
7	0.368	0.593	1/0	4/0	1/0	266.8 MCM
2	0.464	0.743	3/0	397 18/1	3/0	400 MCM
3	0.743	1.152	397 18/1	795 26/7	450 MCM	1,000 MCM
4	1.060	1.545	795 45/7	1590 54/19	874.5 MCM	1,750 MCM

Notes
1. NEMA standard abbreviations for aluminum or copper: W = solid conductor, ACSR = aluminum conductor/steel reinforced

© 2011, AFL, all rights reserved. PP-3-00457, Revision 1, 3.1.18
Specifications are subject to change without notice.

DOSSERT®

TYPE UD-AA

Universal Parallel Clamp

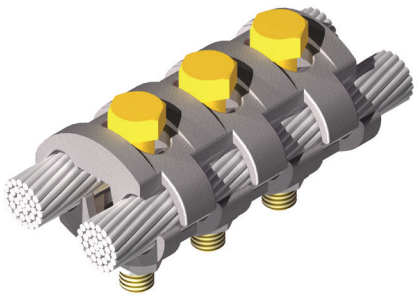

A universal clamp to provide a connection for two cables or wires over a wide range of sizes.

Material

Aluminum Alloy

Hardware

Yellow anodized aluminum bolts, nuts and lockwashers.

Notes

Voltage rating is 230 kV

For tin plating add "-SN" to end of catalog number. EX: UD50-21-AA-SN

Add suffix "GS" for galvanized steel hardware. EX: UD50-21-AA-GS

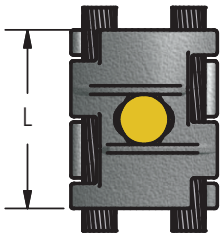

FIG. 1

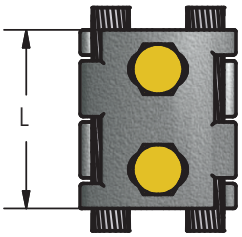

FIG. 2

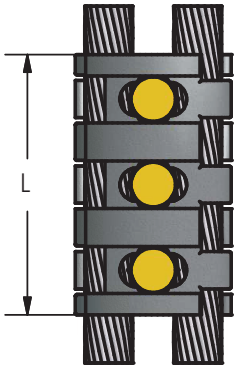

FIG. 3

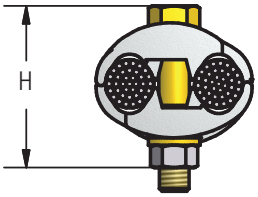

Ordering Information

CATALOG NUMBER	CONDUCTOR RANGE AAC		FIGURE NUMBER	DIMENSIONS IN INCHES		
	MIN	MAX		H	L	BOLT SIZE
UD10-2-AA	#6 SOL.	1/0 STR.	1	1 3/4	2	3/8
UD21-4-AA	#4 SOL.	4/0 STR.	2	2	2 1/4	3/8
UD30-6-AA	#2 SOL.	300 MCM	2	2 1/4	2 1/2	3/8
UD50-21-AA	4/0 STR.	500 MCM	3	2 3/4	4 3/8	1/2
UD80-30-AA	300 MCM	800 MCM	3	3 1/4	4 1/2	1/2
UD100-50-AA	500 MCM	1000 MCM	3	3 1/2	4 5/8	1/2

© 2011, AFL, all rights reserved. PP-3-00491, Revision 0, 1.12.11
Specifications are subject to change without notice.

DOSSERT®

TYPE SCB-F-AA

Stud Connector to Flat Bar

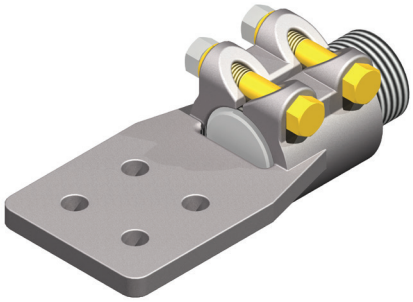

Aluminum Connector for Stud to Flat

Material

Aluminum Alloy

Hardware

Yellow anodized aluminum bolts, nuts, and lockwashers.

Notes

1. Add suffix "-SN" catalog number for tinned plated order:
   SCB200-1/2F-4N4-T12-AA-SN

2. For special thread sizes change the "-T" in the catalog number. EX: for a 1" stud with no threads order: SCB100-1/4F-2N-T0-AA.

FIG. 1

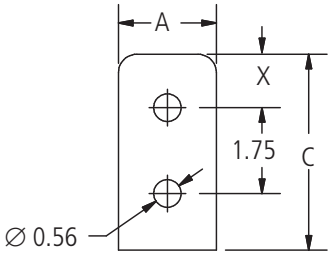

FIG. 2

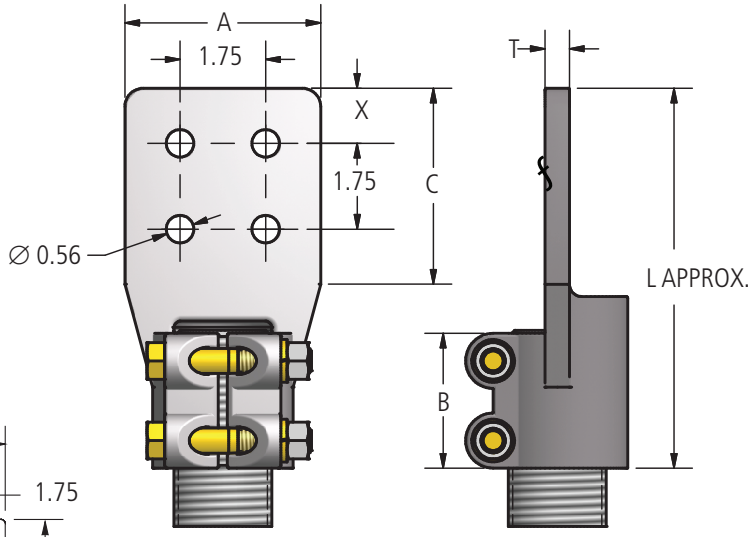

FIG. 3

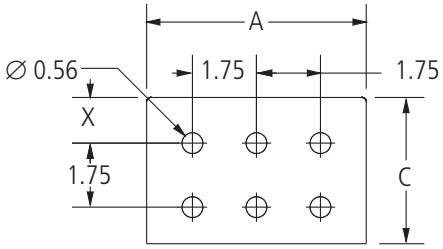

© 2011, AFL, all rights reserved. PP-3-00448, Revision 6, 6.1.18
Specifications are subject to change without notice.

230 kV Aluminum Bolted Stud Connectors

DOSSERT®

TYPE SCB-F-AA

Stud Connector to Flat Bar

Ordering Information

CATALOG NUMBER	STUD DIAMETER	THREADS PER INCH	FIGURE NUMBER	DIMENSIONS IN INCHES						BOLT SIZE
				A	B	C	L	T	X	
SCB75-1/4F-2N-T16-AA	3/4	16	1	2	2 1/4	3	5 7/8	1/4	5/8	1/2
SCB75-3/8F-3N-T16-AA	3/4	16	2	3	2 1/4	3	5 7/8	3/8	5/8	1/2
SCB75-3/8F-4N-T16-AA	3/4	16	2	4	2 1/4	3	5 7/8	3/8	5/8	1/2
SCB100-1/4F-2N-T14-AA	1	14	1	2	2 1/4	3	5 7/8	1/4	5/8	1/2
SCB100-1/4F-3N-T14-AA	1	14	2	3	2 1/4	3	5 7/8	1/4	5/8	1/2
SCB100-3/8F-3N-T14-AA	1	14	2	3	2 1/4	3	5 7/8	3/8	5/8	1/2
SCB100-3/8F-4N-T14-AA	1	14	2	4	2 1/4	3	5 7/8	3/8	5/8	1/2
SCB100-3/8F-4N4-T14-AA	1	14	2	4	2 1/4	4	6 7/8	3/8	1 1/8	1/2
SCB112-3/8F-2N-T12-AA	1 1/8	12	1	2	2 1/4	3	5 7/8	3/8	5/8	1/2
SCB112-3/8F-3N-T12-AA	1 1/8	12	2	3	2 1/4	3	5 7/8	3/8	5/8	1/2
SCB112-3/8F-4N-T12-AA	1 1/8	12	2	4	2 1/4	3	5 7/8	3/8	5/8	1/2
SCB112-3/8F-4N4-T12-AA	1 1/8	12	2	4	2 1/4	4	5 7/8	3/8	1 1/8	1/2
SCB112-1/2F-3N-T12-AA	1 1/8	12	2	3	2 1/4	3	5 7/8	1/2	5/8	1/2
SCB112-1/2F-4N-T12-AA	1 1/8	12	2	4	2 1/4	3	5 7/8	1/2	5/8	1/2
SCB112-1/2F-4N4-T12-AA	1 1/8	12	2	4	2 1/4	4	6 7/8	1/2	1 1/8	1/2
SCB125-3/8F-3N-T12-AA	1 1/4	12	2	3	2 1/4	3	5 7/8	3/8	5/8	1/2
SCB125-3/8F-4N-T12-AA	1 1/4	12	2	4	2 1/4	3	5 7/8	3/8	5/8	1/2
SCB125-1/2F-3N-T12-AA	1 1/4	12	2	3	2 1/4	3	5 7/8	1/2	5/8	1/2
SCB125-1/2F-4N-T12-AA	1 1/4	12	2	4	2 1/4	3	5 7/8	1/2	5/8	1/2
SCB125-1/2F-4N4-T12-AA	1 1/4	12	2	4	2 1/4	4	6 7/8	1/2	1 1/8	1/2
SCB150-3/8F-3N-T12-AA	1 1/2	12	2	3	2 1/4	3	6 7/8	3/8	5/8	1/2
SCB150-1/2F-3N-T12-AA	1 1/2	12	2	3	2 1/4	3	5 7/8	1/2	5/8	1/2
SCB150-1/2F-4N-T12-AA	1 1/2	12	2	4	2 1/4	3	5 7/8	1/2	5/8	1/2
SCB150-1/2F-4N4-T12-AA	1 1/2	12	2	4	2 1/4	4	6 7/8	1/2	1 1/8	1/2
SCB150-5/8F-3N-T12-AA	1 1/2	12	2	3	2 1/4	3	6 7/8	5/8	5/8	1/2
SCB150-3/4F-4N-T12-AA	1 1/2	12	2	4	2 1/4	3	6 1/2	3/4	5/8	1/2
SCB150-3/4F-4N4-T12-AA	1 1/2	12	2	4	2 1/4	4	6 1/2	3/4	1 1/8	1/2
SCB150-3/4F-6N4-T12-AA	1 1/2	12	3	6	2 3/4	4	7 3/8	3/4	1 1/8	1/2
SCB157-1/2F-4N4-T0-AA	40 MM	0	2	4	2 1/4	4	7 1/2	1/2	1 1/8	1/2
SCB175-1/2F-4N-T12-AA	1 3/4	12	2	3	2 1/4	3	6 1/2	1/2	1 1/8	1/2
SCB200-1/2F-3N-T12-AA	2	12	2	3	2 3/4	3	6 1/2	1/2	5/8	1/2
SCB200-1/2F-4N-T12-AA	2	12	2	4	2 3/4	3	6 1/2	1/2	5/8	1/2
SCB200-1/2F-4N4-T12-AA	2	12	2	4	2 3/4	4	7 1/2	1/2	1 1/8	1/2
SCB200-3/4F-3N-T12-AA	2	12	2	3	2 3/4	3	6 1/2	3/4	5/8	1/2
SCB200-3/4F-4N-T12-AA	2	12	2	4	2 3/4	3	6 1/2	3/4	5/8	1/2
SCB200-3/4F-4N4-T12-AA	2	12	2	4	2 3/4	4	7 1/2	3/4	1 1/8	1/2
SCB200-1F-3N-T12-AA	2	12	2	3	2 3/4	3	6 1/2	1	5/8	1/2
SCB225-5/8F-4N4-T12-AA	2 1/4	12	2	4	2 3/4	4	7 1/2	5/8	1 1/8	1/2
SCB250-3/4F-3N-T12-AA	2 1/2	12	2	3	2 3/4	3	6 1/2	3/4	5/8	1/2
SCB250-3/4F-4N-T12-AA	2 1/2	12	2	4	2 3/4	3	6 1/2	3/4	5/8	1/2
SCB250-3/4F-4N4-T12-AA	2 1/2	12	2	4	2 3/4	4	7 1/2	3/4	1 1/8	1/2
SCB250-7/8F-4N-T12-AA	2 1/2	12	2	4	2 3/4	3	6 1/2	7/8	5/8	1/2
SCB250-7/8F-4N4-T12-AA	2 1/2	12	2	4	2 3/4	4	7 1/2	7/8	1 1/8	1/2
SCB250-1F-6N4-T12-AA	2 1/2	12	3	6	2 3/4	4	7 1/2	1	1 1/8	1/2
SCB300-1/2F-3N-T12-AA	3	12	2	3	2 3/4	3	7 1/4	1/2	5/8	5/8
SCB300-3/4F-3N-T12-AA	3	12	2	3	2 3/4	3	7 1/4	3/4	5/8	5/8
SCB300-3/4F-4N-T12-AA	3	12	2	4	2 3/4	3	7 1/4	3/4	5/8	5/8
SCB300-3/4F-4N4-T12-AA	3	12	2	4	2 3/4	4	8 1/4	3/4	1 1/8	5/8
SCB300-3/4F-6N4-T12-AA	3	12	3	6	2 3/4	4	8 1/4	3/4	1 1/8	5/8
SCB300-1F-3N-T12-AA	3	12	2	3	2 3/4	3	7 1/4	1	5/8	5/8
SCB300-1F-4N-T12-AA	3	12	2	4	2 3/4	3	7 1/4	1	5/8	5/8
SCB300-1F-4N4-T12-AA	3	12	2	4	3 1/2	4	8 5/8	1	1 1/8	5/8
SCB400-1F-4N4-T10-AA	4	10	2	4	3 1/2	4	8 1/2	1	1 1/8	5/8
SCB400-1F-4N4-T12-AA	4	12	2	4	3 1/2	4	8 1/2	1	1 1/8	5/8
SCB500-1-1/4F-6N4-T12-AA	5	12	3	6	4	4	9 1/8	1 1/4	1 1/8	5/8

© 2011, AFL, all rights reserved. PP-3-00448, Revision 6, 6.1.18
Specifications are subject to change without notice.

230 kV Aluminum Bolted Stud Connectors

DOSSERT®

TYPE SCV-AA

Stud Connector to Cable

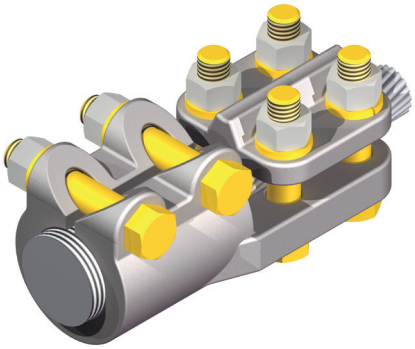

Stud connector is designed for use on aluminum studs. The cable connector is designed with a universal groove which allows a range of aluminum or ACSR conductor for each size.

Material

Aluminum Alloy

Hardware

Yellow anodized aluminum bolts, nuts and lockwashers.

Notes

1. Special thread is available upon request.
2. For no thread replace number after 'T' with a '0'. Ex: SCV50-25-T0-AA

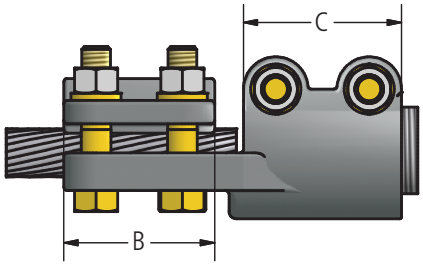

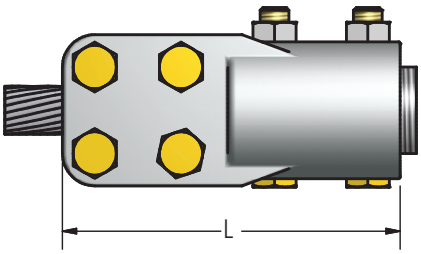

Ordering Information

CATALOG NUMBER	STUD DIA.	THREADS PER INCH	CABLE RANGE		CABLE RANGE ACSR		DIMENSIONS IN INCHES			BOLT SIZE	
			MIN	MAX	MIN	MAX	B	C	L	STUD	CABLE
SCV50-25-T13-AA	1/2	13	1/0	250M	1/0	4/0	3	2 1/4	5 1/2	1/2	1/2
SCV50-40-T13-AA	1/2	13	250M	400M	4/0	397.5	3	2 1/4	5 1/2	1/2	1/2
SCV50-60-T13-AA	1/2	13	350M	600M	336.4	477	3	2 1/4	5 1/2	1/2	1/2
SCV75-25-T16-AA	3/4	16	1/0	250M	1/0	4/0	3	2 1/4	5 1/2	1/2	1/2
SCV75-40-T16-AA	3/4	16	250M	400M	4/0	397.5	3	2 1/4	5 1/2	1/2	1/2
SCV75-60-T16-AA	3/4	16	350M	600M	336.4	477	3	2 1/4	5 1/2	1/2	1/2
SCV75-90-T16-AA	3/4	16	500M	900M	477	795	3	2 1/4	5 1/2	1/2	1/2
SCV75-125-T16-AA	3/4	16	900M	1250M	715.5	1113	3 1/4	2 1/4	5 3/4	1/2	1/2
SCV78-25-T0-AA	25/32	0	1/0	250M	1/0	4/0	3	2 1/4	5 1/2	1/2	1/2
SCV100-25-T14-AA	1	14	1/0	250M	1/0	4/0	3	2 1/4	5 1/2	1/2	1/2
SCV100-40-T14-AA	1	14	250M	400M	4/0	397.5	3	2 1/4	5 1/2	1/2	1/2
SCV100-60-T14-AA	1	14	350M	600M	336.4	477	3	2 1/4	5 1/2	1/2	1/2
SCV100-90-T14-AA	1	14	500M	900M	477	795	3	2 1/4	5 1/2	1/2	1/2
SCV100-125-T14-AA	1	14	900M	1250M	715.5	1113	3 1/4	2 1/4	5 3/4	1/2	1/2
SCV112-25-T12-AA	1-1/8	12	1/0	250M	1/0	4/0	3	2 1/4	5 1/2	1/2	1/2
SCV112-40-T12-AA	1-1/8	12	250M	400M	4/0	397.5	3	2 1/4	5 1/2	1/2	1/2
SCV112-60-T12-AA	1-1/8	12	350M	600M	336.4	477	3	2 1/4	5 1/2	1/2	1/2
SCV112-90-T12-AA	1-1/8	12	500M	900M	477	795	3	2 1/4	5 1/2	1/2	1/2
SCV112-125-T12-AA	1-1/8	12	900M	1250M	715.5	1113	3 1/4	2 1/4	5 3/4	1/2	1/2
SCV112-160-T12-AA	1-1/8	12	1250M	1600M	1113	1431	4 3/8	2 1/4	6 7/8	1/2	5/8

© 2011, AFL, all rights reserved. PP-3-00450, Revision 0, 1.12.11
Specifications are subject to change without notice.

230 kV Aluminum Bolted Stud Connectors

DOSSERT®

TYPE SCV-AA

Stud Connector to Cable

Ordering Information cont.

CATALOG NUMBER	STUD DIA.	THREADS PER INCH	CABLE RANGE		CABLE RANGE ACSR		DIMENSIONS IN INCHES			BOLT SIZE	
			MIN	MAX	MIN	MAX	B	C	L	STUD	CABLE
SCV125-40-T12-AA	1-1/8	12	250M	400M	4/0	397.5	3	2-1/4	5-1/2	1/2	1/2
SCV125-60-T12-AA	1-1/4	12	350M	600M	336.4	477	3	2-1/4	5-1/2	1/2	1/2
SCV125-90-T14-AA	1-1/4	12	500M	900M	477	795	3	2-1/4	5-1/2	1/2	1/2
SCV125-125-T14-AA	1-1/4	12	900M	1250M	715.5	1113	3-1/4	2-1/4	5-3/4	1/2	1/2
SCV150-25-T12-AA	1-1/4	12	1/0	250M	1/0	4/0	3	2-1/4	5-1/2	1/2	1/2
SCV150-40-T12-AA	1-1/2	12	250M	400M	4/0	397.5	3	2-1/4	5-1/2	1/2	1/2
SCV150-60-T12-AA	1-1/2	12	350M	600M	336.4	477	3	2-1/4	5-1/2	1/2	1/2
SCV150-90-T12-AA	1-1/2	12	500M	900M	477	795	3	2-1/4	5-1/2	1/2	1/2
SCV150-125-T12-AA	1-1/2	12	900M	1250M	715.5	1113	3-1/4	2-1/4	5-7/8	1/2	1/2
SCV150-160-T12-AA	1-1/2	12	1250M	1600M	1113	1431	4-3/8	2-1/4	7	1/2	1/2
SCV150-200-T12-AA	1-1/2	12	1500M	2000M	1272	1780	4-1/2	2-1/4	7-1/8	1/2	1/2
SCV150-250-T12-AA	1-1/2	12	2000M	2500M	1780	2300	4-1/2	2-1/4	7-1/8	1/2	1/2
SCV175-25-T12-AA	1-3/4	12	1/0	250M	1/0	4/0	3	2-3/4	6	1/2	1/2
SCV175-40-T12-AA	1-3/4	12	250M	400M	4/0	397.5	3	2-3/4	6	1/2	1/2
SCV175-60-T12-AA	1-3/4	12	350M	600M	336.4	477	3	2-3/4	6	1/2	1/2
SCV175-90-T12-AA	1-3/4	12	500M	900M	477	795	3	2-3/4	6	1/2	1/2
SCV175-125-T12-AA	1-3/4	12	900M	1250M	715	1113	3-1/4	2-3/4	6-1/4	1/2	1/2
SCV175-160-T12-AA	1-3/4	12	1250M	1600M	1113	1431	4-3/8	2-3/4	7-3/8	1/2	5/8
SCV175-200-T12-AA	1-3/4	12	1500M	2000M	1272	1780	4-1/2	2-3/4	7-1/2	1/2	5/8
SCV175-250-T12-AA	1-3/4	12	2000M	2500M	1780	2300	4-1/2	2-3/4	7-1/2	1/2	5/8
SCV200-25-T12-AA	2	12	1/0	250M	1/0	4/0	3	2-3/4	6	1/2	1/2
SCV200-40-T12-AA	2	12	250M	400M	4/0	397.5	3	2-3/4	6	1/2	1/2
SCV200-60-T12-AA	2	12	350M	600M	336.4	477	3	2-3/4	6	1/2	1/2
SCV200-90-T12-AA	2	12	500M	900M	477	795	3	2-3/4	6	1/2	1/2
SCV200-125-T12-AA	2	12	900M	1250M	715	1113	3-1/4	2-3/4	6-1/2	1/2	1/2
SCV200-160-T12-AA	2	12	1250M	1600M	1113	1431	4-3/8	2-3/4	7-3/8	1/2	5/8
SCV200-200-T12-AA	2	12	1500M	2000M	1272	1780	4-1/2	2-3/4	7-1/2	1/2	5/8
SCV200-250-T12-AA	2	12	2000M	2500M	1780	2300	4-1/2	2-3/4	7-1/2	1/2	5/8
SCV250-25-T12-AA	2-1/2	12	1/0	250M	1/0	4/0	3	3	6-1/4	1/2	1/2
SCV250-40-T12-AA	2-1/2	12	250M	400M	4/0	397.5	3	3	6-1/4	1/2	1/2
SCV250-60-T12-AA	2-1/2	12	350M	600M	336.4	477	3	3	6-1/4	1/2	1/2
SCV250-90-T12-AA	2-1/2	12	500M	900M	477	795	3	3	6-1/4	1/2	1/2
SCV250-125-T12-AA	2-1/2	12	900M	1250M	715	1113	3-1/4	3	6-1/2	1/2	1/2
SCV250-160-T12-AA	2-1/2	12	1250M	1600M	1113	1431	4-3/8	3	7-5/8	1/2	5/8
SCV250-200-T12-AA	2-1/2	12	1500M	2000M	1272	1780	4-1/2	3	7-3/4	1/2	5/8
SCV250-250-T12-AA	2-1/2	12	2000M	2500M	1780	2300	4-1/2	3	7-3/7	1/2	5/8
SCV300-60-T12-AA	3	12	350M	600M	336.4	477	3	3	6-1/4	1/2	1/2
SCV300-90-T12-AA	3	12	500M	900M	477	795	3	3	6-1/4	1/2	1/2
SCV300-125-T12-AA	3	12	900M	1250M	715	1113	3-1/4	3	6-1/2	1/2	1/2
SCV300-160-T12-AA	3	12	1250M	1600M	1113	1431	4-3/8	3-1/4	7-7/8	5/8	5/8
SCV300-200-T12-AA	3	12	1500M	2000M	1272	1780	4-1/2	3-1/4	8	5/8	5/8
SCV300-250-T12-AA	3	12	2000M	2500M	1780	2300	4-1/2	3-1/4	8	5/8	5/8

© 2011, AFL, all rights reserved. PP-3-00450, Revision 0, 1.12.11
Specifications are subject to change without notice.

230 kV Aluminum Bolted Stud Connectors

DOSSERT®

TYPE SCX-AA, S2CX-AA

Aluminum Stud Connector for Cable

SCX-AA connects one cable to one stud and S2CX-AA connects two cables on one stud.

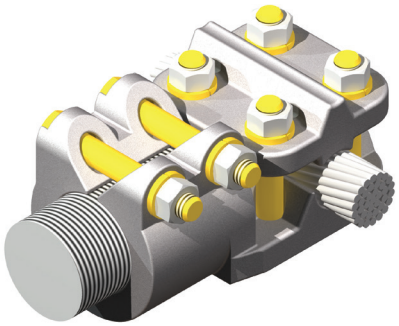

A variable conductor stud connector which takes a wide range of cable sizes in line or in a 90° position. The reversible cap permits optimum clamping for all cable sizes within the assigned ranges. In addition, one flat surface is machined to accommodate flat bar conductors. Can be furnished upon request in type SCX-N-AA with bolt holes to accommodate NEMA standard bar drilling.

Material

Aluminum Alloy

Hardware

Yellow anodized aluminum bolts, nuts and lockwashers.

Notes

1. For a 1" T14 stud, and two 1000 MCM cables order S2CX100-100-AA-T14

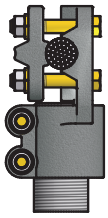

SCX

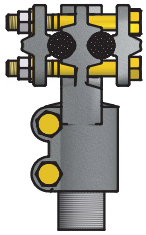

S2CX

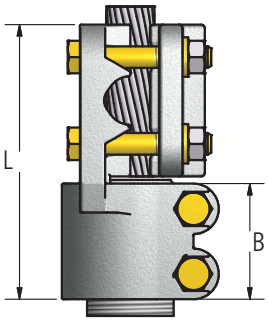

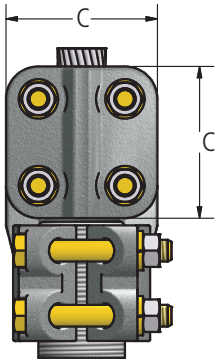

Ordering Information

CATALOG NUMBER		STUD DIA.	THREADS PER INCH	CABLE RANGE		SPS RANGE		DIMENSIONS IN INCHES			BOLT SIZE
SCX-AA	S2CX-AA			MIN	MAX	SMALL GROOVE	LARGE GROOVE	B	C	L	
SCX50-21-T13-AA	S2CX50-21-T13-AA	1/2	13	#6 SOL	4/0 STR	-	-	2	2	4 5/8	3/8
SCX75-21-T16-AA	S2CX75-21-T16-AA	3/4	16	#6 SOL	4/0 STR	-	-	2	2	4 5/8	3/8
SCX75-50-T16-AA	S2CX75-50-T16-AA	3/4	16	#6 SOL	500 MCM	3/8	1/2	2	2 1/4	4 7/8	3/8
SCX75-100-T16-AA	S2CX75-100-T16-AA	3/4	16	#2 SOL	1000 MCM	3/8	3/4	2	2 1/2	5 1/8	3/8
SCX100-21-T14-AA	S2CX100-21-T14-AA	1	14	#6 SOL	4/0 STR	-	-	2	2	4 3/8	3/8
SCX100-50-T14-AA	S2CX100-50-T14-AA	1	14	#6 SOL	500 MCM	3/8	1/2	2	2 1/4	4 7/8	3/8
SCX100-50-T0-AA	S2CX100-50-T0-AA	1	0	#6 SOL	500 MCM	3/8	1/2	2	2 1/4	4 7/8	3/8
SCX100-100-T14-AA	S2CX100-100-T14-AA	1	14	#2 SOL	1000 MCM	3/8	3/4	2 1/2	2 7/8	6 3/8	1/2
SCX112-21-T12-AA	S2CX112-21-T12-AA	1 1/8	12	#6 SOL	4/0 STR	-	-	2	2	4 5/8	3/8
SCX112-50-T12-AA	S2CX112-50-T12-AA	1 1/8	12	#6 SOL	500 MCM	3/8	1/2	2	2 1/4	4 7/8	3/8
SCX112-100-T12-AA	S2CX112-100-T12-AA	1 1/8	12	#2 SOL	1000 MCM	3/8	3/4	2 3/4	2 7/8	6 3/8	1/2
SCX125-100-T12-AA	S2CX125-100-T12-AA	1 1/4	12	#2 SOL	1000 MCM	3/8	3/4	2 3/4	2 7/8	6 3/8	1/2
SCX150-21-T12-AA	S2CX150-21-T12-AA	1 1/2	12	#6 SOL	500 MCM	-	-	2	2	4 5/8	3/8
SCX150-50-T12-AA	S2CX150-50-T12-AA	1 1/2	12	#6 SOL	500 MCM	3/8	1/2	2	2 1/4	4 7/8	3/8
SCX150-100-T12-AA	S2CX150-100-T12-AA	1 1/2	12	#2 SOL	1000 MCM	3/8	3/4	2 3/4	2 7/8	6 3/8	1/2
SCX150-200-T12-AA	S2CX150-200-T12-AA	1 1/2	12	4/0 STR	2000 MCM	3/8	1 1/4	2 3/4	3 3/8	6 3/4	1/2
SCX200-200-T12-AA	S2CX200-200-T12-AA	2	12	4/0 STR	2000 MCM	3/8	1 1/4	2 3/4	3 3/8	6 3/4	1/2

© 2011, AFL, all rights reserved. PP-3-00452, Revision 0, 1.12.11
Specifications are subject to change without notice.

230 kV Aluminum Bolted Stud Connectors

DOSSERT®

TYPE SP-AA

Stud Connector to Pipe

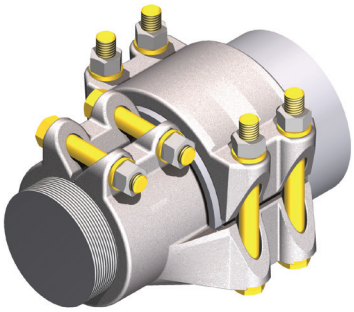

A connector for joining a tubular bus conductor to a threaded stud.

Material

Aluminum Alloy

Hardware

Yellow anodized aluminum nuts, bolts and lockwashers.

Notes

1. For tin plating add suffix "-SN" to end of catalog number.
2. For no threads use suffix "T0" in catalog number. Ex: SP100-75-T0-AA-SN.

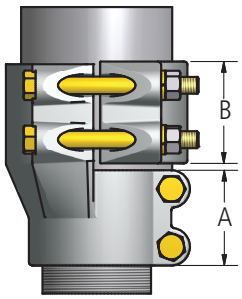

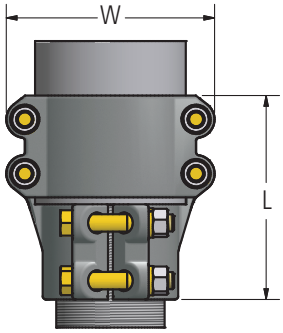

Ordering Information

CATALOG NUMBER	STUD DIAMETER	THREADS PER INCH	SPS	DIMENSIONS IN INCHES				BOLT SIZE	
				A	B	L	W	STUD	PIPE
SP125-150-T14-AA	1-1/4	14	1-1/2	2-3/4	3	6	3-5/8	1/2	1/2
SP100-75-T16-AA	1	16	3/4	2-3/4	2-3/4	5-3/4	2-13/16	1/2	1/2
SP150-300-T12-AA	1-1/2	12	3	2-3/4	3-1/2	6-1/2	5-5/8	1/2	1/2
SP112-75-T12-AA	1-1/8	12	3/4	2-3/4	2-3/4	5-3/4	2-13/16	1/2	1/2
SP112-100-T12-AA	1-1/8	12	1	2-3/4	2-3/4	5-3/4	3-1/16	1/2	1/2
SP112-125-T12-AA	1-1/8	12	1-1/4	2-3/4	3	6	3-7/16	1/2	1/2
SP112-150-T12-AA	1-1/8	12	1-1/2	2-3/4	3	6	3-5/8	1/2	1/2
SP118-250-T12-AA	1-3/6	12	2-1/2	2-3/4	3-1/4	6-1/4	4-1/8	1/2	1/2
SP150-100-T12-AA	1-1/2	12	1	2-3/4	2-3/4	5-3/4	3-1/16	1/2	1/2
SP150-125-T12-AA	1-1/2	12	1-1/4	2-3/4	3	6	3-7/16	1/2	1/2
SP150-150-T12-AA	1-1/2	12	1-1/2	2-3/4	3	6	3-5/8	1/2	1/2
SP150-200-T12-AA	1-1/2	12	2	2-3/4	3-1/4	6-1/4	4-1/8	1/2	1/2
SP150-250-T12-AA	1-1/2	12	2-1/2	2-3/4	3-1/4	6-1/4	4-1/8	1/2	1/2
SP200-100-T12-AA	2	12	1	2-3/4	2-3/4	5-3/4	3-1/16	1/2	1/2
SP200-125-T12-AA	2	12	1-1/4	2-3/4	3	6	3-7/16	1/2	1/2
SP200-150-T12-AA	2	12	1-1/2	2-3/4	3	6	3-5/8	1/2	1/2
SP200-200-T12-AA	2	12	2	2-3/4	3-1/4	6-1/4	4-1/8	1/2	1/2
SP200-250-T12-AA	2	12	2-1/2	2-3/4	3-1/4	6-1/4	4-1/8	1/2	1/2
SP200-350-T12-AA	2	12	3-1/2	2-3/4	3-3/4	6-3/4	6-1/8	1/2	5/8
SP400-500-T10-AA	4	10	5	3-1/2	3-3/4	7-1/2	7-3/4	5/8	5/8
SP400-600-T12-AA	4	12	6	4-1/8	8	12-1/2	8-3/4	5/8	5/8

© 2011, AFL, all rights reserved. PP-3-00461, Revision 1, 6.1.18
Specifications are subject to change without notice.

TYPE SX-AA, SX-90-AA

Stud Expansion Connector for Pipe

An expansion stud connector for joining a tubular bus to a threaded or unthreaded transformer stud. The movements of the conductors caused by thermal expansion and contraction or settling foundations are efficiently absorbed by the aluminum laminated straps. Type SX is furnished with an alignment guide for connections where axial alignment is required.

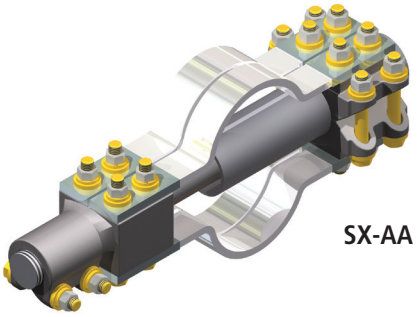

SX-AA

Material
Aluminum Alloy

Hardware
Aluminum bolts, nuts, and lockwashers.

Laminates
Pure aluminum

Notes
1. For a 90 degree stud connector, add -90 to the Catalog Number.
   Ex: SX100-100-T14-90-AA

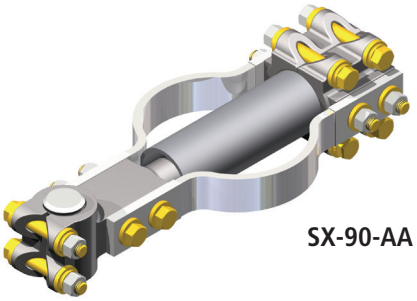

SX-90-AA

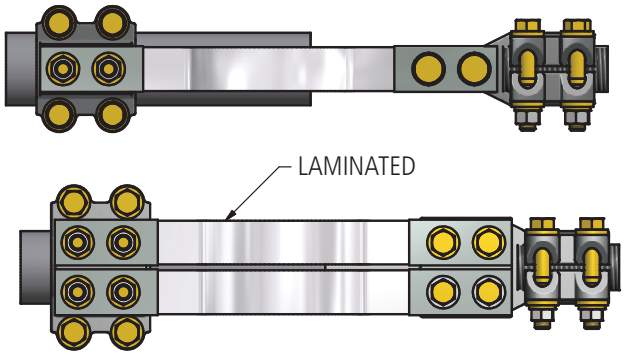

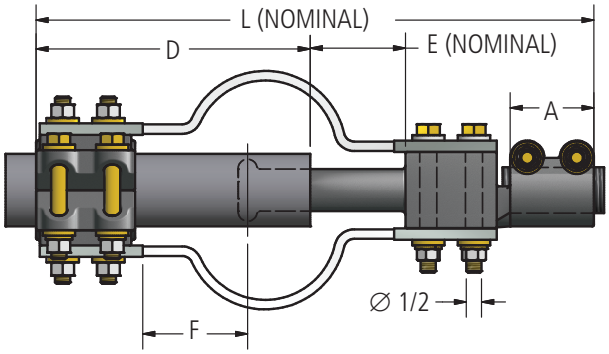

SX-90-AA

© 2011, AFL, all rights reserved. PP-3-00466, Revision 4, 10.28.2024
Specifications are subject to change without notice.

AFLglobal.com
1 (800) 890-8878

TYPE SX-AA, SX-90-AA

Stud Expansion Connector for Pipe Type SX

Ordering Information

Catalog Number		SPS	Stud Diameter	Threads Per Inch	Dimension in Inches					Bolt Size	
					A	D	E	F	L	Stud	SPS
SX75-75-T16-AA	SX75-75-T16-90-AA	3/4	3/4	16	2-1/4	6-5/8	1-1/2	3	13-5/8	1/2	1/2
SX75-100-T16-AA	SX75-100-T16-90-AA	1	3/4	16	2-1/4	6-3/4	1-1/2	3-1/2	13-3/4	1/2	1/2
SX100-75-T14-AA	SX100-75-T14-90-AA	3/4	1	14	2-1/4	6-5/8	1-1/2	3	13-5/8	1/2	1/2
SX100-100-T14-AA	SX100-100-T14-90-AA	1	1	14	2-1/4	6-3/4	1-1/2	3-1/2	13-3/4	1/2	1/2
SX100-125-T14-AA	SX100-125-T14-90-AA	1-1/4	1	14	2-1/4	7-5/8	1-1/2	3-1/2	14-5/8	1/2	1/2
SX100-150-T14-AA	SX100-150-T14-90-AA	1-1/2	1	14	2-1/4	7-5/8	1-1/2	3-1/2	14-5/8	1/2	1/2
SX100-200-T12-AA	SX100-200-T12-90-AA	2	1	12	2-11/32	10	2-1/2	4-1/2	16-3/4	1/2	1/2
SX112-75-T12-AA	SX112-75-T12-90-AA	3/4	1-1/8	12	2-1/4	6-5/8	1-1/2	3	13-5/8	1/2	1/2
SX112-100-T12-AA	SX112-100-T12-90-AA	1	1-1/8	12	2-1/4	6-3/4	1-1/2	3-1/2	13-3/4	1/2	1/2
SX112-125-T12-AA	SX112-125-T12-90-AA	1-1/4	1-1/8	12	2-1/4	7-5/8	1-1/2	3-1/2	14-5/8	1/2	1/2
SX112-150-T12-AA	SX112-150-T12-90-AA	1-1/2	1-1/8	12	2-1/4	7-5/8	1-1/2	3-1/2	14-5/8	1/2	1/2
SX112-250-T12-AA	SX112-250-T12-90-AA	2-1/2	1-1/8	12	2-1/2	8-3/4	2-1/2	4-1/2	16-5/8	1/2	1/2
SX125-75-T12-AA	SX125-75-T12-90-AA	3/4	1-1/4	12	2-3/4	6-5/8	1-1/2	3	14-1/8	1/2	1/2
SX125-100-T12-AA	SX125-100-T12-90-AA	1	1-1/4	12	2-3/4	6-3/4	1-1/2	3-1/2	14-1/4	1/2	1/2
SX125-125-T12-AA	SX125-125-T12-90-AA	1-1/4	1-1/4	12	2-3/4	7-5/8	1-1/2	3-1/2	15-1/8	1/2	1/2
SX125-150-T12-AA	SX125-150-T12-90-AA	1-1/2	1-1/4	12	2-3/4	7-5/8	1-1/2	3-1/2	15-1/8	1/2	1/2
SX150-75-T12-AA	SX150-75-T12-90-AA	3/4	1-1/2	12	2-3/4	6-5/8	1-1/2	3	14-1/8	1/2	1/2
SX150-100-T12-AA	SX150-100-T12-90-AA	1	1-1/2	12	2-3/4	6-3/4	1-1/2	3-1/2	14-1/4	1/2	1/2
SX150-125-T12-AA	SX150-125-T12-90-AA	1-1/4	1-1/2	12	2-3/4	7-5/8	1-1/2	3-1/2	15-1/8	1/2	1/2
SX150-150-T12-AA	SX150-150-T12-90-AA	1-1/2	1-1/2	12	2-3/4	7-5/8	1-1/2	3-1/2	15-1/8	1/2	1/2
SX150-200-T12-AA	SX150-200-T12-90-AA	2	1-1/2	12	2-3/4	8-1/4	2-1/2	4-1/2	16-3/4	1/2	1/2
SX150-450-T12-AA	SX150-450-T12-90-AA	4-1/2	1-1/2	12	2-3/4	11-3/4	3-3/4	3-5/8	22	1/2	5/8
SX175-75-T12-AA	SX175-75-T12-90-AA	3/4	1-3/4	12	2-3/4	6-5/8	1-1/2	3	14-1/8	1/2	1/2
SX175-100-T12-AA	SX175-100-T12-90-AA	1	1-3/4	12	2-3/4	6-3/4	1-1/2	3-1/2	14-1/4	1/2	1/2
SX175-125-T12-AA	SX175-125-T12-90-AA	1-1/4	1-3/4	12	2-3/4	7-5/8	1-1/2	3-1/2	15-1/8	1/2	1/2
SX175-150-T12-AA	SX175-150-T12-90-AA	1-1/2	1-3/4	12	2-3/4	7-5/8	1-1/2	3-1/2	15-1/8	1/2	1/2
SX175-200-T12-AA	SX175-200-T12-90-AA	2	1-3/4	12	2-3/4	8-1/4	2-1/2	4-1/2	16-3/4	1/2	1/2
SX200-100-T12-AA	SX200-100-T12-90-AA	1	2	12	2-3/4	6-3/4	1-1/2	3-1/2	14-1/4	1/2	1/2
SX200-125-T12-AA	SX200-125-T12-90-AA	1-1/4	2	12	2-3/4	7-5/8	1-1/2	3-1/2	15-1/8	1/2	1/2
SX200-150-T12-AA	SX200-150-T12-90-AA	1-1/2	2	12	2-3/4	7-5/8	1-1/2	3-1/2	15-1/8	1/2	1/2
SX200-200-T12-AA	SX200-200-T12-90-AA	2	2	12	2-3/4	8-1/4	2-1/2	4-1/2	16-3/4	1/2	1/2
SX200-250-T12-AA	SX200-250-T12-90-AA	2-1/2	2	12	2-3/4	8-3/4	2-1/2	4-1/2	17-1/4	1/2	1/2
SX200-250E-T12-AA	SX200-250E-T12-90-AA	2-1/2	2	12	2-3/4	8-3/4	2-1/2	4-1/2	17-1/4	1/2	1/2
SX200-300-T12-AA	SX200-300-T12-90-AA	3	2	12	2 3/4	6 9/16	5	4 1/2	18 7/16	1/2	5/8
SX225-350E-T12-AA	SX225-350E-T12-90-AA	3-1/2	2-1/4	12	2-3/4	9-1/4	2-1/2	4-1/2	15-1/2	1/2	5/8
SX250-250E-T12-AA	SX250-250E-T12-90-AA	2-1/2	2-1/2	12	2-3/4	9-1/4	2-1/2	4-1/2	15-1/2	1/2	5/8
SX300-200-T12-AA	SX300-200-T12-90-AA	2	3	12	3-1/4	8-1/4	2-1/2	4-1/2	17-1/4	5/8	1/2
SX300-250-T12-AA	SX300-250-T12-90-AA	2-1/2	3	12	3-1/4	8-3/4	2-1/2	4-1/2	17-3/4	5/8	1/2
SX300-300-T12-AA	SX300-300-T12-90-AA	3	3	12	3-1/4	10	2-1/2	4-1/2	19	5/8	5/8
SX300-350-T12-AA	SX300-350-T12-90-AA	3-1/2	3	12	3-1/4	11	2-1/2	4-1/2	20	5/8	5/8
SX300-400-T12-AA	SX300-400-T12-90-AA	4	3	12	3-1/4	11-1/2	2-1/2	4-1/2	20-1/2	5/8	5/8

© 2011, AFL, all rights reserved. PP-3-00466, Revision 4, 10.28.2024
Specifications are subject to change without notice.

AFLglobal.com
1 (800) 890-8878

DOSSERT®

TYPE SXLW-SI-AA

Aluminum To Bronze Angular Expansion Connector

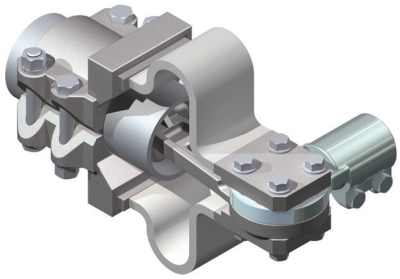

Expansion connector is designed for expansion and contraction in long bus runs. Stud connector can be adjusted to suit customers requirements. Laminated straps provide for 1.4" of expansion or contraction for pipe sizes 3/4" through 1 1/2" NPS. For pipe sizes 2" through 4", the straps allow for expansion or contraction of 2.6."

Material

Aluminum Alloy, Copper Alloy

Hardware

Stainless steel nuts, bolts and lockwashers.

Notes

1. For a custom thread count change the number after the "T" in the catalog number.
   Ex:WSXL200C-350-SI-T0-AA
   Additional sizes are available.

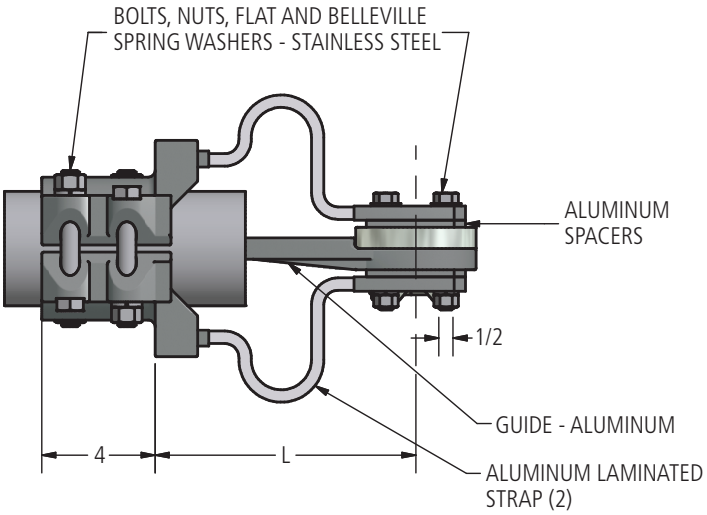

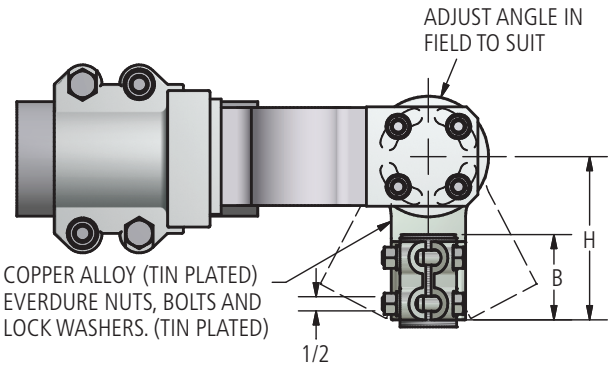

Ordering Information

CATALOG NUMBER	STUD DIAMETER	THREADS PER INCH	SPS		DIMENSIONS IN INCHES		
					B	H	L
SXLW200C-350-SI-T12-AA	2	12	2	SCH 40	2 3/4	5 3/4	7 3/4
SXLW200C-400E-SI-T12-AA	2	12	4	SCH 80	2 3/4	5 3/4	9 5/16
SXLW300C-400E-SI-T12-AA	3	12	4	SCH 80	3	6 5/8	9 5/16

© 2011, AFL, all rights reserved. PP-3-00467, Revision 0, 1.12.11
Specifications are subject to change without notice.

DOSSERT®

TYPE BAP-AA

Tee Connector

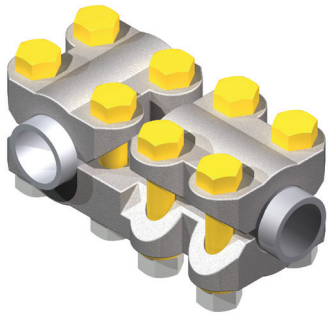

Tee connector is designed to make a tee connection in bus construction. Connector can be used on Schedule 40 and Schedule 80 pipe. Four clamp bolts on each conductor ensures positive electrical contact.

Material

Aluminum Alloy

Hardware

Yellow anodized aluminum bolts, nuts, and lockwashers.

Notes

Contact surfaces can be precoated by adding suffix -LP.

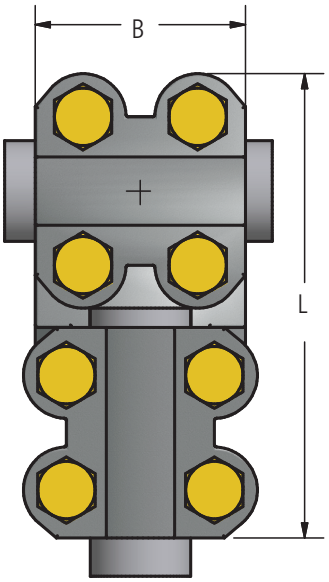

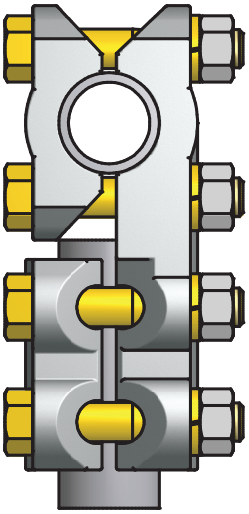

Ordering Information

CATALOG NUMBER	SPS		DIMENSIONS IN INCHES		BOLT SIZE
	MAIN	TAP	B	L	
BAP75-75-AA	3/4	3/4	2 3/4	5 13/16	1/2
BAP100-50-AA	1	1/2	2 3/4	6 1/16	1/2
BAP100-75-AA	1	3/4	2 3/4	6 1/16	1/2
BAP100-100-AA	1	1	2 3/4	6 1/16	1/2
BAP100-150-AA	1	1 1/2	2 3/4	6 5/16	1/2
BAP100-200-AA	1	2	2 3/4	6 9/16	1/2
BAP100-250-AA	1	2 1/2	2 3/4	6 9/16	1/2
BAP125-75-AA	1 1/4	3/4	3	6 13/32	1/2
BAP125-100-AA	1 1/4	1	3	6 13/32	1/2
BAP125-125-AA	1 1/4	1 1/4	3	6 21/32	1/2
BAP150-75-AA	1 1/2	3/4	3	6 21/32	1/2
BAP150-100-AA	1 1/2	1	3	6 21/32	1/2
BAP150-125-AA	1 1/2	1 1/4	3	6 29/32	1/2
BAP150-150-AA	1 1/2	1 1/2	3	6 29/32	1/2

© 2011, AFL, all rights reserved. PP-3-00239, Revision 1, 8.21.17
Specifications are subject to change without notice.

DOSSERT®

TYPE BAP-AA

Tee Connector

Ordering Information

CATALOG NUMBER	SPS		DIMENSIONS IN INCHES		BOLT SIZE
	MAIN	TAP	B	L	
BAP150-200-AA	1 1/2	2	3	7 5/32	1/2
BAP150-250-AA	1 1/2	2 1/2	3	7 5/32	1/2
BAP150-300-AA	1 1/2	3	3	7 3/8	1/2
BAP200-75-AA	2	3/4	3 1/4	7 1/8	1/2
BAP200-100-AA	2	1	3 1/4	7 1/8	1/2
BAP200-125-AA	2	1 1/4	3 1/4	7 3/8	1/2
BAP200-150-AA	2	1 1/2	3 1/4	7 3/8	1/2
BAP200-200-AA	2	2	3 1/4	7 5/8	1/2
BAP200-250-AA	2	2 1/2	3 1/4	7 5/8	1/2
BAP200-300-AA	2	3	3 1/4	7 7/8	1/2
BAP200-350-AA	2	3 1/2	3 1/4	8 1/4	1/2 and 5/8
BAP200-62R-S-AA	2	5/8R	3 1/4	6 1/2	1/2
BAP250-75-AA	2 1/2	3/4	3 1/4	7 5/8	1/2
BAP250-100-AA	2 1/2	1	3 1/4	7 5/8	1/2
BAP250-125-AA	2 1/2	1 1/4	3 1/4	7 7/8	1/2
BAP250-150-AA	2 1/2	1 1/2	3 1/4	7 7/8	1/2
BAP250-200-AA	2 1/2	2	3 1/4	8 1/8	1/2
BAP250-250-AA	2 1/2	2 1/2	3 1/4	8 1/8	1/2
BAP250-300-AA	2 1/2	3	3 1/4	8 3/8	1/2
BAP250-350-AA	2 1/2	3 1/2	3 1/4	8 1/4	1/2
BAP300-75-AA	3	3/4	3	8 1/4	1/2
BAP300-100-AA	3	1	3	8 1/2	1/2
BAP300-125-AA	3	1 1/4	3	8 1/2	1/2
BAP300-150-AA	3	1 1/2	3 1/2	8 3/4	1/2
BAP300-200-AA	3	2	3 1/2	8 3/4	1/2
BAP300-250-AA	3	2 1/2	3 1/2	8 3/4	1/2
BAP300-300-AA	3	3	3 3/4	8 3/4	5/8
BAP350-100-AA	3 1/2	1	3 1/2	8 3/4	1/2
BAP350-125-AA	3 1/2	1 1/4	3 1/2	9	1/2
BAP350-150-AA	3 1/2	1 1/2	3 1/2	9	1/2
BAP350-200-AA	3 1/2	2	3 1/2	9 1/4	1/2
BAP350-250-AA	3 1/2	2 1/2	3 1/2	9 1/4	5/8 and 1/2
BAP350-300-AA	3 1/2	3	3 3/4	10	5/8
BAP350-350-AA	3 1/2	3 1/2	3 3/4	10	5/8
BAP400-100-AA	4	1	3 1/4	9 1/4	1/2
BAP400-125-AA	4	1 1/4	3 1/4	9 1/2	1/2
BAP400-150-AA	4	1 1/2	3 1/4	9 1/2	1/2
BAP400-200-AA	4	2	3 1/4	9 3/4	1/2
BAP400-250-AA	4	2 1/2	3 1/4	9 3/4	1/2
BAP400-300-AA	4	3	3 3/4	10 1/2	5/8
BAP400-350-AA	4	3 1/2	3 3/4	10 1/2	5/8
BAP400-400-AA	4	4	3 3/4	10 5/8	5/8
BAP500-150-AA	5	1 1/2	3 3/4	10 15/16	5/8 and 1/2
BAP500-250-AA	5	2 1/2	3 3/4	10 15/32	1/2
BAP500-300-AA	5	3	3 3/4	11 3/4	5/8
BAP500-500-AA	5	5	7	15	5/8
BAP600-300-AA	6	3	3 3/4	12 3/4	5/8
BAP600-600-AA	6	6	8	17	5/8
BAP125-118R-AA	1 1/4	30MM	3	6 13/32	1/2
BAP-500-393R-AA	5	100MM	3 3/4	11 3/4	5/8

© 2011, AFL, all rights reserved. PP-3-00239, Revision 1, 8.21.17
Specifications are subject to change without notice.

DOSSERT®

TYPE BCV-AA

Cable to Cable Tee

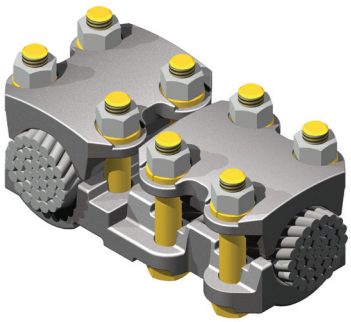

Tee connectors are designed for use with stranded aluminum or ACSR conductors. Tees are designed with universal grooves to accept a wide range of conductor sizes. Four clamp bolts on each conductor insures a positive electrical contact.

Material

Aluminum Alloy

Hardware

Yellow anodized aluminum nuts, bolts and lockwashers.

Notes

- For Stainless Steel bolts, lockwashers and Everdur nuts, add "-SSHBN" to catalog number. EX: BCV25-25-AA-SSHBN
- For Grade Five Galvanized Steel Hardware, add "-GS5" to catalog number. EX: BCV25-25-AA-GS5
- For Electro Tin Plate, add "-SN" to catalog number. EX: BCV25-25-AA-SN

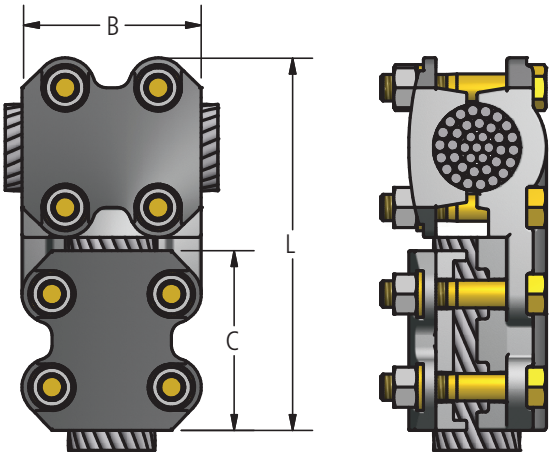

Ordering Information

CATALOG NUMBER	AAC RUN		ACSR RUN		AAC TAP		ACSR TAP		DIMENSIONS IN INCHES			BOLT SIZE	
	MIN	MAX	MIN	MAX	MIN	MAX	MIN	MAX	B	C	L	RUN	TAP
BCV10-10-AA	4	1/0	4	1/0	4	1/0	4	1/0	1-7/8	1-7/8	4-3/8	1/2	1/2
BCV25-25-AA	1/0	250	1/0	4/0	1/0	250	1/0	4/0	3	3	5-5/8	1/2	1/2
BCV40-25-AA	250	400	4/0	397.4	1/0	250	1/0	4/0	3	3	5-3/4	1/2	1/2
BCV40-40-AA	250	400	4/0	397.4	250	400	4/0	397.5	3	3	5-3/4	1/2	1/2
BCV40-60-AA	250	400	4/0	397.4	350	600	336.4	477	3	3	5-3/4	1/2	1/2
BCV40-90-AA	250	400	4/0	397.4	500	900	477	795	3	3	5-3/4	1/2	1/2
BCV60-25-AA	350	600	336.4	477	1/0	250	1/0	4/0	3	3	5-15/16	1/2	1/2
BCV60-40-AA	350	600	336.4	477	250	400	4/0	397.5	3	3	5-15/16	1/2	1/2
BCV60-60-AA	350	600	336.4	477	350	600	336.4	477	3	3	5-15/16	1/2	1/2
BCV60-90-AA	350	600	336.4	477	500	900	477	795	3	3	5-15/16	1/2	1/2
BCV90-25-AA	500	900	477	795	1/0	250	1/0	4/0	3	3	6-1/8	1/2	1/2
BCV90-30-AA	500	900	477	795	1/0	300	1/0	266.8	3	3	6-1/8	1/2	1/2
BCV90-40-AA	500	900	477	795	250	400	4/0	397.5	3	3	6-1/8	1/2	1/2
BCV90-60-AA	500	900	477	795	350	600	336	477	3	3	6-1/8	1/2	1/2

© 2011, AFL, all rights reserved. PP-3-00243, Revision 3, 10.9.19
Specifications are subject to change without notice.

DOSSERT®

TYPE BCV-AA

Cable to Cable Tee

Ordering Information

CATALOG NUMBER	AAC RUN		ACSR RUN		AAC TAP		ACSR TAP		DIMENSIONS IN INCHES			BOLT SIZE	
	MIN	MAX	MIN	MAX	MIN	MAX	MIN	MAX	B	C	L	RUN	TAP
BCV90-90-AA	500	900	477	795	500	900	477	795	3	3	6-1/8	1/2	1/2
BCV90-125-AA	500	900	477	795	900	1250	715	1113	3	3-1/4	6-3/8	1/2	1/2
BCV125-25-AA	900	1250	715	1113	1/0	250	1/0	4/0	3-1/4	3	6-5/16	1/2	1/2
BCV125-40-AA	900	1250	715	1113	250	400	4/0	397.5	3-1/4	3	6-5/16	1/2	1/2
BCV125-60-AA	900	1250	715	1113	350	600	336.4	477	3-1/4	3	6-5/16	1/2	1/2
BCV125-90-AA	900	1250	715	1113	500	900	477	795	3-1/4	3	6-5/16	1/2	1/2
BCV125-125-AA	900	1250	715	1113	900	1250	715	1113	3-1/4	3-1/4	6-9/16	1/2	1/2
BCV125-160-AA	900	1250	715	1113	1250	1600	1113	1431	4-3/8	4-3/8	7-11/16	1/2	5/8
BCV160-25-AA	1250	1600	1113	1431	1/0	250	1/0	4/0	4-3/8	3	6-7/8	5/8	1/2
BCV160-40-AA	1250	1600	1113	1431	250	400	4/0	397.5	4-3/8	3	6-7/8	5/8	1/2
BCV160-60-AA	1250	1600	1113	1431	350	600	336.4	477	4-3/8	3	6-7/8	5/8	1/2
BCV160-60S-AA	1250	1600	1113	1431	4/0	600	3/0	477	4-3/8	3	6-7/8	5/8	1/2
BCV160-90-AA	1250	1600	1113	1431	500	900	477	795	4-3/8	3	6-7/8	5/8	1/2
BCV160-125-AA	1250	1600	1113	1431	900	1250	715	1113	4-3/8	3-1/4	7-1/8	5/8	1/2
BCV160-160-AA	1250	1600	1113	1431	1250	1600	1113	1431	4-3/8	4-3/8	8-1/4	5/8	5/8
BCV160-200-AA	1250	1600	1113	1431	1500	2000	1272	1780	4-3/8	4-1/2	8-3/8	5/8	5/8
BCV200-25-AA	1500	2000	1272	1780	1/0	250	1/0	4/0	4-1/2	3	7-1/8	5/8	1/2
BCV200-40-AA	1500	2000	1272	1780	250	400	4/0	397.5	4-1/2	3	7-1/8	5/8	1/2
BCV200-60-AA	1500	2000	1272	1780	350	600	336.4	477	4-1/2	3	7-1/8	5/8	1/2
BCV200-90-AA	1500	2000	1272	1780	500	900	477	795	4-1/2	3	7-1/8	5/8	1/2
BCV200-125-AA	1500	2000	1272	1780	900	1250	715	1113	4-1/2	3-1/4	7-3/8	5/8	1/2
BCV200-160-AA	1500	2000	1272	1780	1250	1600	1113	1431	4-1/2	4-3/8	8-1/2	5/8	5/8
BCV200-200-AA	1500	2000	1272	1780	1500	2000	1272	1780	4-1/2	4-1/2	8-5/8	5/8	5/8
BCV200-250-AA	1500	2000	1272	1780	2000	2500	1780	2300	4-1/2	4-1/2	8-5/8	5/8	5/8
BCV250-25-AA	2000	2500	1780	2300	1/0	250	1/0	4/0	4-1/2	3	7-1/4	5/8	1/2
BCV250-40-AA	2000	2500	1780	2300	250	400	4/0	397.5	4-1/2	3	7-1/4	5/8	1/2
BCV250-60-AA	2000	2500	1780	2300	350	600	336.4	477	4-1/2	3	7-1/4	5/8	1/2
BCV250-90-AA	2000	2500	1780	2300	500	900	477	795	4-1/2	3	7-1/4	5/8	1/2
BCV250-125-AA	2000	2500	1780	2300	900	1250	715	1113	4-1/2	3-1/4	7-1/2	5/8	1/2
BCV250-160-AA	2000	2500	1780	2300	1250	1600	1113	1431	4-1/2	4-3/8	8-5/8	5/8	5/8
BCV250-200-AA	2000	2500	1780	2300	1500	2000	1272	1780	4-1/2	4-1/2	8-3/4	5/8	5/8
BCV250-250-AA	2000	2500	1780	2300	2000	2500	1780	2300	4-1/2	4-1/2	8-3/4	5/8	5/8
BCV250-300-AA	2000	2500	1780	2300	2500	3000	1780	2870	4-1/2	4-1/2	8-3/4	5/8	5/8
BCV250-350-AA	2000	2500	1780	2300	3000	3500	-	-	4 1/2	4 1/2	8 3/4	5/8	5/8
BCV300-25-AA	2500	3000	2312	2870	1/0	250	1/0	4/0	4-1/2	3	7-3/8	5/8	1/2
BCV300-40-AA	2500	3000	2312	2870	250	400	4/0	397.5	4-1/2	3	7-3/8	5/8	1/2
BCV300-60-AA	2500	3000	2312	2870	350	600	366.4	477	4-1/2	3	7-3/8	5/8	1/2
BCV300-90-AA	2500	3000	2312	2870	500	900	477	795	4-1/2	3	7-3/8	5/8	1/2
BCV300-125-AA	2500	3000	2312	2870	900	1250	715	1113	4-1/2	3-1/4	7-3/8	5/8	1/2
BCV300-160-AA	2500	3000	2312	2870	1250	1600	1113	1431	4-1/2	4-3/8	9	5/8	5/8
BCV300-200-AA	2500	3000	2312	2870	1500	2000	1272	1780	4-1/2	4-1/2	9-1/8	5/8	5/8
BCV300-250-AA	2500	3000	2312	2870	2000	2500	1780	2300	4-1/2	4-1/2	8-13/16	5/8	5/8
BCV300-300-AA	2500	3000	2312	2870	2500	3000	2312	2870	4-1/2	4-1/2	8-13/16	5/8	5/8
BCV350-40-AA	3000	3500	-	-	250	400	4/0	397.4	4 1/2	3	8 13/16	5/8	1/2
BCV350-125-AA	3000	3500	-	-	250	400	4/0	397.4	4 1/2	3 1/4	8 13/16	5/8	1/2
BCV350-200-AA	3000	3500	-	-	1500	2000	1780	2300	4 1/2	4 1/2	8 13/16	5/8	5/8
BCV350-350-AA	3000	3500	-	-	3000	2500	-	-	4 1/2	4 1/2	8 13/16	5/8	5/8

© 2011, AFL, all rights reserved. PP-3-00243, Revision 3, 10.9.19
Specifications are subject to change without notice.

DOSSERT®

TYPE BP-AA, BPA-75-AA, BPA-80-AA

Standard, 75 Degree and 80 Degree Tee Connector

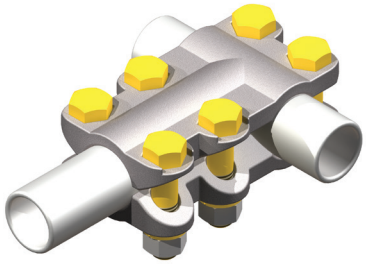

An aluminum tee connector designed for maximum efficiency and reliability. Connector can be used with Schedule 40 and Schedule 80 pipe.

Material

Aluminum Alloy

Hardware

Yellow anodized aluminum bolts, nuts, and lockwashers.

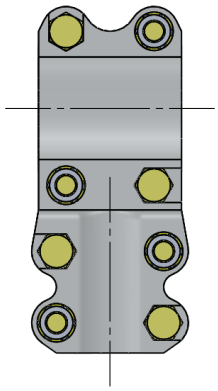

BP-AA

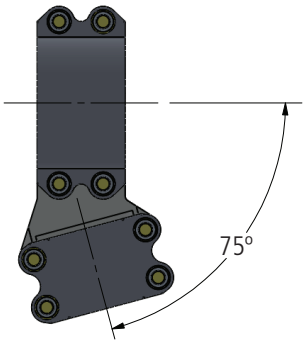

BPA-75-AA

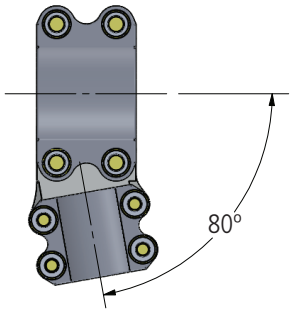

BPA-80-AA

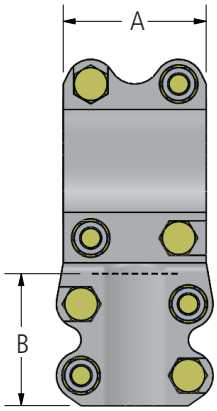

BP-AA

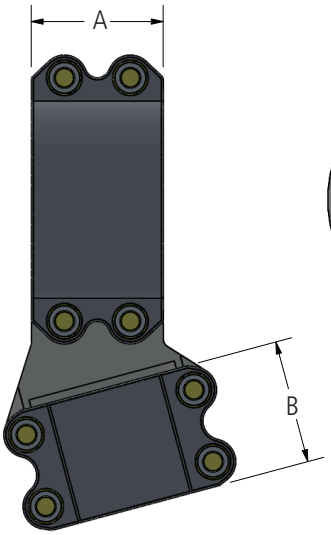

BPA-AA

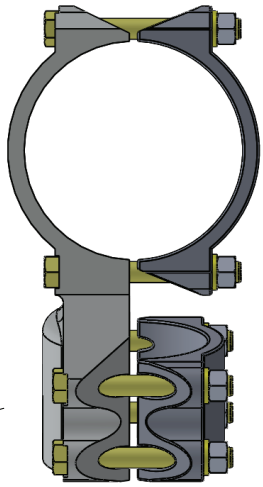

© 2011, AFL, all rights reserved. PP-3-00252, Revision 3, 12.18.18
Specifications are subject to change without notice.

DOSSERT®

TYPE BP-AA, BPA-75-AA, BPA-80-AA

Standard, 75 Degree, and 80 Degree Tee Connector

Ordering Information

CATALOG NUMBER			SPS		DIMENSIONS IN INCHES		BOLT SIZE
STANDARD	75 DEGREES	80 DEGREES	RUN	TAP	A	B	
BP100-75-AA	BPA100-75-75-AA	BPA100-75-80-AA	1	3/4	2-3/4	2-3/4	1/2
BP100-100-AA	BPA100-100-75-AA	BPA100-100-80-AA	1	1	2-3/4	2-3/4	1/2
BP125-75-AA	BPA125-75-75-AA	BPA125-75-80-AA	1-1/4	3/4	3	2-3/4	1/2
BP125-100-AA	BPA125-100-75-AA	BPA125-100-80-AA	1-1/4	1	3	2-3/4	1/2
BP125-125-AA	BPA125-125-75-AA	BPA125-125-80-AA	1-1/4	1-1/4	3	3	1/2
BP150-100-AA	BPA150-100-75-AA	BPA150-100-80-AA	1-1/2	1	3	2-3/4	1/2
BP150-125-AA	BPA150-125-75-AA	BPA150-125-80-AA	1-1/2	1-1/4	3	3	1/2
BP150-150-AA	BPA150-150-75-AA	BPA150-150-80-AA	1-1/2	1-1/2	3	3	1/2
BP200-100-AA	BPA200-100-75-AA	BPA200-100-80-AA	2	1	3-1/4	2-3/4	1/2
BP200-125-AA	BPA200-125-75-AA	BPA200-125-80-AA	2	1-1/4	3-1/4	3	1/2
BP200-150-AA	BPA200-150-75-AA	BPA200-150-80-AA	2	1-1/2	3-1/4	3	1/2
BP200-200-AA	BPA200-200-75-AA	BPA200-200-80-AA	2	2	3-1/4	3-1/4	1/2
BP200-250-AA	BPA200-250-75-AA	BPA200-250-80-AA	2	2-1/2	3-1/4	3-1/4	1/2
BP250-75-AA	BPA250-75-75-AA	BPA250-75-80-AA	2-1/2	3/4	3-1/4	2-3/4	1/2
BP250-100-AA	BPA250-100-75-AA	BPA250-100-80-AA	2-1/2	1	3-1/4	2-3/4	1/2
BP250-125-AA	BPA250-125-75-AA	BPA250-125-80-AA	2-1/2	1-1/4	3-1/4	3	1/2
BP250-150-AA	BPA250-150-75-AA	BPA250-150-80-AA	2-1/2	1-1/2	3-1/4	3	1/2
BP250-200-AA	BPA250-200-75-AA	BPA250-200-80-AA	2-1/2	2	3-1/4	3-1/4	1/2
BP250-250-AA	BPA250-250-75-AA	BPA250-250-80-AA	2-1/2	2-1/2	3-1/4	3-1/4	1/2
BP300-100-AA	BPA300-100-75-AA	BPA300-100-80-AA	3	1	3-1/4	2-3/4	1/2
BP300-125-AA	BPA300-125-75-AA	BPA300-125-80-AA	3	1-1/4	3-1/4	3	1/2
BP300-150-AA	BPA300-150-75-AA	BPA300-150-80-AA	3	1-1/2	3-1/4	3	1/2
BP300-200-AA	BPA300-200-75-AA	BPA300-200-80-AA	3	2	3-1/4	3-1/4	1/2
BP300-250-AA	BPA300-250-75-AA	BPA300-250-80-AA	3	2-1/2	3-1/4	3-1/4	1/2
BP300-300-AA	BPA300-300-75-AA	BPA300-300-80-AA	3	3	3-3/4	3-3/4	5/8
BP350-100-AA	BPA350-100-75-AA	BPA350-100-80-AA	3-1/2	1	3-1/4	2-3/4	1/2
BP350-125-AA	BPA350-125-75-AA	BPA350-125-80-AA	3-1/2	1-1/4	3-1/4	3	1/2
BP350-150-AA	BPA350-150-75-AA	BPA350-150-80-AA	3-1/2	1-1/2	3-1/4	3	1/2
BP350-200-AA	BPA350-200-75-AA	BPA350-200-80-AA	3-1/2	2	3-1/4	3-1/4	1/2
BP350-250-AA	BPA350-250-75-AA	BPA350-250-80-AA	3-1/2	2-1/2	3-1/4	3-1/4	1/2
BP350-300-AA	BPA350-300-75-AA	BPA350-300-80-AA	3-1/2	3	3-3/4	3-3/4	5/8
BP350-350-AA	BPA350-350-75-AA	BPA350-350-80-AA	3-1/2	3-1/2	3-3/4	3-3/4	5/8
BP400-125-AA	BPA400-125-75-AA	BPA400-125-80-AA	4	1-1/4	3-1/4	3	1/2
BP400-150-AA	BPA400-150-75-AA	BPA400-150-80-AA	4	1-1/2	3-1/4	3	1/2
BP400-200-AA	BPA400-200-75-AA	BPA400-200-80-AA	4	2	3-1/4	3-1/4	1/2
BP400-250-AA	BPA400-250-75-AA	BPA400-250-80-AA	4	2-1/2	3-1/4	3-1/4	1/2
BP400-300-AA	BPA400-300-75-AA	BPA400-300-80-AA	4	3	3-3/4	3-3/4	5/8
BP400-350-AA	BPA400-350-75-AA	BPA400-350-80-AA	4	3-1/2	3-3/4	3-3/4	5/8
BP400-400-AA	BPA400-400-75-AA	BPA400-400-80-AA	4	4	3-3/4	3-3/4	5/8
BP500-150-AA	BPA500-150-75-AA	BPA500-150-80-AA	5	1-1/2	3-1/2	3	1/2
BP500-200-AA	BPA500-200-75-AA	BPA500-200-80-AA	5	2	3-1/2	3-1/4	1/2
BP500-250-AA	BPA500-250-75-AA	BPA500-250-80-AA	5	2-1/2	3-1/2	3-1/4	1/2
BP500-300-AA	BPA500-300-75-AA	BPA500-300-80-AA	5	3	3-3/4	3-3/4	5/8
BP500-350-AA	BPA500-350-75-AA	BPA500-350-80-AA	5	3-1/2	4	3-3/4	5/8
BP500-400-AA	BPA500-400-75-AA	BPA500-400-80-AA	5	4	4	3-3/4	5/8
BP500-500-AA	BPA500-500-75-AA	BPA500-500-80-AA	5	5	4	4	5/8
BP600-250-AA	BPA600-250-75-AA	BPA600-250-80-AA	6	2-1/2	3-1/2	3-1/4	1/2
BP600-300-AA	BPA600-300-75-AA	BPA600-300-80-AA	6	3	4	3-3/4	5/8
BP600-350-AA	BPA600-350-75-AA	BPA600-350-80-AA	6	3-1/2	4	3-3/4	5/8
BP600-400-AA	BPA600-400-75-AA	BPA600-400-80-AA	6	4	4	3-3/4	5/8
BP600-500-AA	BPA600-500-75-AA	BPA600-500-80-AA	6	5	4	4	5/8
BP600-600-AA	BPA600-600-75-AA	BPA600-600-80-AA	6	6	4	4	5/8

© 2011, AFL, all rights reserved. PP-3-00252, Revision 3, 12.18.18
Specifications are subject to change without notice.

DOSSERT®

TYPE BPCV-AA, BP2CV-AA

Aluminum Tee Connector For Tubular Bus To A Cable Tap

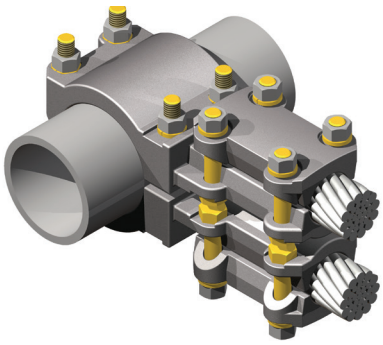

A variable tap pipe to cable tee connector. Cable clamping section is provided with two independently acting aluminum alloy saddles.

Material

Aluminum Alloy

Hardware

Yellow anodized aluminum bolts, nuts, and lockwashers.

Notes

1. For tin plating, add "-SN" to end of catalog number. EX: BP2CV300-125-AA-SN
2. For galvanized steel hardware, add "-GS" to end of catalog number. EX: BP2CV300-125-AA-GS
3. For grade five galvanized steel hardware, add "-GS5" to end of catalog number. EX: BPCV75-125-AA-GS5
4. For two cables in-line, add "-90V" to catalog number. EX: BP2CV400-200-90V-AA

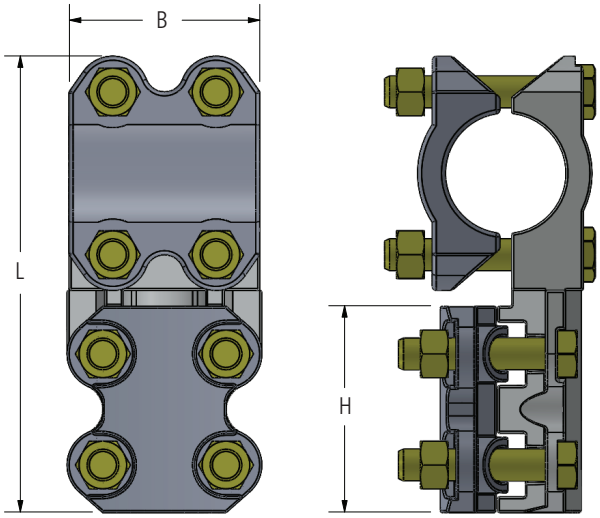

BPCV-AA

FIG. 1

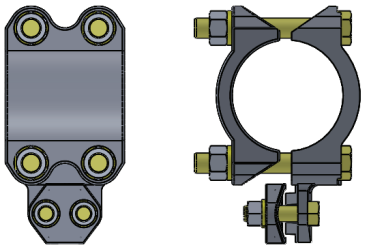

FIG. 2

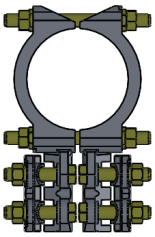

BP2CV-AA

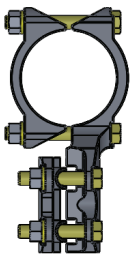

BP2CV-90V-AA

© 2011, AFL, all rights reserved. PP-3-00274, 3, 11.8.2022
Specifications are subject to change without notice.

230 kV Aluminum Bolted Tee & Vee Connectors

DOSSERT®

TYPE BPCV-AA, BP2CV-AA

Aluminum Tee Connector For Tubular Bus To A Cable Tap

Ordering Information

CATALOG NUMBER		FIG. NO.	SPS	CABLE TAP				DIMENSIONS IN INCHES		
				ALUMINUM		ACSR				
BPCV	BP2CV			MIN	MAX	MIN	MAX	B	L	H
BPCV50-25-AA	BP2CV50-25-AA	1	1/2	#1/0	250 MCM	#1/0	#4/0	2.75	6.13	3.00
BPCV50-50-AA	BP2CV50-50-AA	1	1/2	1/0 STR	250 MCM	#1/0	#4/0	2.75	6.13	3.00
BPCV75-25-AA	BP2CV75-25-AA	1	3/4	#1/0	250 MCM	#1/0	#4/0	2.75	6.13	3.00
BPCV75-40-AA	BP2CV75-40-AA	1	3/4	250 MCM	400 MCM	#4/0	397.5	2.75	6.13	3.00
BPCV75-60-AA	BP2CV75-60-AA	1	3/4	350 MCM	600 MCM	336.4	477	2.75	6.13	3.00
BPCV75-90-AA	BP2CV75-90-AA	1	3/4	500 MCM	900 MCM	477	795	2.75	6.13	3.00
BPCV75-125-AA	BP2CV75-125-AA	1	3/4	900 MCM	1250 MCM	715	1113	2.75	6.38	3.25
BPCV75-160-AA	BP2CV75-160-AA	1	3/4	1250 MCM	1600 MCM	1113	1431	2.75	7.50	4.38
BPCV75-200-AA	BP2CV75-200-AA	1	3/4	1500 MCM	2000 MCM	1272	1780	2.75	7.63	4.50
BPCV100-25-AA	BP2CV100-25-AA	1	1	1/0 STR	250 MCM	#1/0	#4/0	2.75	6.38	3.00
BPCV100-40-AA	BP2CV100-40-AA	1	1	250 MCM	400 MCM	#4/0	397.5	2.75	6.38	3.00
BPCV100-60-AA	BP2CV100-60-AA	1	1	350 MCM	600 MCM	336.4	477	2.75	6.38	3.00
BPCV100-90-AA	BP2CV100-90-AA	1	1	500 MCM	900 MCM	477	795	2.75	6.38	3.00
BPCV100-125-AA	BP2CV100-125-AA	1	1	900 MCM	1250 MCM	715	1113	2.75	6.63	3.25
BPCV100-160-AA	BP2CV100-160-AA	1	1	1250 MCM	1600 MCM	1113	1431	2.75	7.75	4.38
BPCV100-200-AA	BP2CV100-200-AA	1	1	1500 MCM	2000 MCM	1272	1780	2.75	7.88	4.50
BPCV125-10-AA	BP2CV125-10-AA	2	1 1/4	4	#1/0	4	#1/0	3.00	5.50	1.88
BPCV125-25-AA	BP2CV125-25-AA	1	1 1/4	1/0 STR	250 MCM	#1/0	#4/0	3.00	6.88	3.00
BPCV125-40-AA	BP2CV125-40-AA	1	1 1/4	250 MCM	400 MCM	#4/0	397.5	3.00	6.88	3.00
BPCV125-60-AA	BP2CV125-60-AA	1	1 1/4	350 MCM	600 MCM	336.4	477	3.00	6.88	3.00
BPCV125-90-AA	BP2CV125-90-AA	1	1 1/4	500 MCM	900 MCM	477	795	3.00	6.88	3.00
BPCV125-125-AA	BP2CV125-125-AA	1	1 1/4	900 MCM	1250 MCM	715	1113	3.00	7.13	3.25
BPCV125-160-AA	BP2CV125-160-AA	1	1 1/4	1250 MCM	1600 MCM	1113	1431	3.00	8.25	4.38
BPCV125-200-AA	BP2CV125-200-AA	1	1 1/4	1500 MCM	2000 MCM	1272	1780	3.00	8.38	4.50
BPCV150-25-AA	BP2CV150-25-AA	1	1 1/2	1/0 STR	250 MCM	#1/0	#4/0	3.00	6.88	3.00
BPCV150-40-AA	BP2CV150-40-AA	1	1 1/2	250 MCM	400 MCM	#4/0	397.5	3.00	6.88	3.00
BPCV150-60-AA	BP2CV150-60-AA	1	1 1/2	350 MCM	600 MCM	336.4	477	3.00	6.88	3.00
BPCV150-90-AA	BP2CV150-90-AA	1	1 1/2	500 MCM	900 MCM	477	795	3.00	6.88	3.00
BPCV150-125-AA	BP2CV150-125-AA	1	1 1/2	900 MCM	1250 MCM	715	1113	3.00	7.13	3.25
BPCV150-160-AA	BP2CV150-160-AA	1	1 1/2	1250 MCM	1600 MCM	1113	1431	3.00	8.25	4.38
BPCV150-200-AA	BP2CV150-200-AA	1	1 1/2	1500 MCM	2000 MCM	1272	1780	3.00	8.38	4.50
BPCV200-10-AA	BP2CV200-10-AA	2	2	4	#1/0	4	#1/0	3.25	6.25	1.88
BPCV200-25-AA	BP2CV200-25-AA	1	2	1/0 STR	250 MCM	#1/0	#4/0	3.25	7.75	3.00
BPCV200-40-AA	BP2CV200-40-AA	1	2	250 MCM	400 MCM	#4/0	397.5	3.25	7.75	3.00
BPCV200-60-AA	BP2CV200-60-AA	1	2	350 MCM	600 MCM	336.4	477	3.25	7.75	3.00
BPCV200-60-S-AA	BP2CV200-60-S-AA	1	2	#4/0	600 MCM	#3/0	477	3.25	7.75	3.00
BPCV200-90-AA	BP2CV200-90-AA	1	2	500 MCM	900 MCM	477	795	3.25	7.75	3.00
BPCV200-125-AA	BP2CV200-125-AA	1	2	900 MCM	1250 MCM	715	1113	3.25	8.00	3.25
BPCV200-160-AA	BP2CV200-160-AA	1	2	1250 MCM	1600 MCM	1113	1431	3.25	9.13	4.38
BPCV200-200-AA	BP2CV200-200-AA	1	2	1500 MCM	2000 MCM	1272	1780	3.25	9.25	4.50
BPCV200-250-AA	BP2CV200-250-AA	1	2	2000 MCM	2500 MCM	1780	2300	3.25	9.25	4.50
BPCV250-25-AA	BP2CV250-25-AA	1	2 1/2	1/0 STR	250 MCM	#1/0	#4/0	3.25	7.88	3.00
BPCV250-40-AA	BP2CV250-40-AA	1	2 1/2	250 MCM	400 MCM	#4/0	397	3.25	7.88	3.00
BPCV250-60-AA	BP2CV250-60-AA	1	2 1/2	350 MCM	600 MCM	336.4	477	3.25	7.88	3.00
BPCV250-90-AA	BP2CV250-90-AA	1	2 1/2	500 MCM	900 MCM	477	795	3.25	8.13	3.00
BPCV250-125-AA	BP2CV250-125-AA	1	2 1/2	900 MCM	1250 MCM	715	1113	3.25	8.38	3.25
BPCV250-160-AA	BP2CV250-160-AA	1	2 1/2	1250 MCM	1600 MCM	1113	1431	3.25	8.50	4.38
BPCV250-200-AA	BP2CV250-200-AA	1	2 1/2	1500 MCM	2000 MCM	1272	1780	3.25	8.63	4.50
BPCV250-250-AA	BP2CV250-250-AA	1	2 1/2	2000 MCM	2500 MCM	1780	2300	3.25	8.63	4.50
BPCV300-10-AA	BP2CV300-10-AA	2	3	4 STR	#1/0	4	#1/0	3.75	7.47	1.88
BPCV300-25-AA	BP2CV300-25-AA	1	3	1/0 STR	250 MCM	#1/0	#4/0	3.00	8.88	3.00
BPCV300-40-AA	BP2CV300-40-AA	1	3	250 MCM	400 MCM	#4/0	397.5	3.00	8.88	3.00
BPCV300-60-AA	BP2CV300-60-AA	1	3	350 MCM	600 MCM	336.4	477	3.00	8.88	3.00
BPCV300-90-AA	BP2CV300-90-AA	1	3	500 MCM	900 MCM	477	795	3.50	8.88	3.00
BPCV300-125-AA	BP2CV300-125-AA	1	3	900 MCM	1250 MCM	715	1113	3.50	8.88	3.25
BPCV300-160-AA	BP2CV300-160-AA	1	3	1250 MCM	1600 MCM	1113	1431	3.75	10.00	4.38

© 2011, AFL, all rights reserved. PP-3-00254, Revision 3, 11.8.2022
Specifications are subject to change without notice.

DOSSERT®

TYPE BPCV-AA, BP2CV-AA

Aluminum Tee Connector For Tubular Bus To A Cable Tap

Ordering Information

CATALOG NUMBER		FIG. NO.	SPS	CABLE TAP				DIMENSIONS IN INCHES		
				ALUMINUM		ACSR				
BPCV	BP2CV			MIN	MAX	MIN	MAX	B	L	H
BPCV300-200-AA	BP2CV300-200-AA	1	3	1500 MCM	2000 MCM	1272	1780	3.75	10.13	4.50
BPCV300-250-AA	BP2CV300-250-AA	1	3	2000 MCM	2500 MCM	1780	2300	3.75	10.13	4.50
BPCV350-25-AA	BP2CV350-25-AA	1	3 1/2	1/0 STR	250 MCM	#1/0	#4/0	3.00	9.38	3.00
BPCV350-40-AA	BP2CV350-40-AA	1	3 1/2	250 MCM	400 MCM	#4/0	397.5	3.00	8.88	3.00
BPCV350-60-AA	BP2CV350-60-AA	1	3 1/2	350 MCM	600 MCM	336.4	477	3.00	8.88	3.00
BPCV350-90-AA	BP2CV350-90-AA	1	3 1/2	500 MCM	900 MCM	477	795	3.00	8.88	3.00
BPCV350-125-AA	BP2CV350-125-AA	1	3 1/2	900 MCM	1250 MCM	715	1113	3.50	9.81	3.25
BPCV350-160-AA	BP2CV350-160-AA	1	3 1/2	1250 MCM	1600 MCM	1113	1431	3.75	11.00	4.38
BPCV350-200-AA	BP2CV350-200-AA	1	3 1/2	1500 MCM	2000 MCM	1272	1780	3.75	11.19	4.50
BPCV400-25-AA	BP2CV400-25-AA	1	4	1/0 STR	250 MCM	#1/0	#4/0	3.25	10.00	3.00
BPCV400-40-AA	BP2CV400-40-AA	1	4	250 MCM	400 MCM	#4/0	397.5	3.25	10.00	3.00
BPCV400-60-AA	BP2CV400-60-AA	1	4	350 MCM	600 MCM	336.4	477	3.25	10.00	3.00
BPCV400-90-AA	BP2CV400-90-AA	1	4	500 MCM	900 MCM	477	795	3.25	9.81	3.00
BPCV400-125-AA	BP2CV400-125-AA	1	4	900 MCM	1250 MCM	715	1113	3.25	10.25	3.25
BPCV400-160-AA	BP2CV400-160-AA	1	4	1250 MCM	1600 MCM	1113	1431	3.75	11.38	4.38
BPCV400-200-AA	BP2CV400-200-AA	1	4	1500 MCM	2000 MCM	1272	1780	3.75	11.50	4.50
BPCV400-250-AA	BP2CV400-250-AA	1	4	2000 MCM	2500 MCM	1780	2300	3.75	11.50	4.50
BPCV500-10-AA	BP2CV500-10-AA	2	5	4 STR	#1/0	4	#1/0	3.25	9.50	1.88
BPCV500-25-AA	BP2CV500-25-AA	1	5	1/0 STR	250 MCM	#1/0	#4/0	3.25	10.50	3.00
BPCV500-40-AA	BP2CV500-40-AA	1	5	250 MCM	400 MCM	#4/0	397.5	3.25	10.50	3.00
BPCV500-60-AA	BP2CV500-60-AA	1	5	350 MCM	600 MCM	336.4	477	3.25	10.50	3.00
BPCV500-90-AA	BP2CV500-90-AA	1	5	500 MCM	900 MCM	477	795	3.25	10.50	3.00
BPCV500-125-AA	BP2CV500-125-AA	1	5	900 MCM	1250 MCM	715	1113	3.25	10.75	3.25
BPCV500-160-AA	BP2CV500-160-AA	1	5	1250 MCM	1600 MCM	1113	1431	3.75	12.13	4.38
BPCV500-200-AA	BP2CV500-200-AA	1	5	1500 MCM	2000 MCM	1272	1780	3.75	12.00	4.50
BPCV500-250-AA	BP2CV500-250-AA	1	5	2000 MCM	2500 MCM	1780	2300	3.75	12.00	4.50
BPCV600-25-AA	BP2CV600-25-AA	1	6	1/0 STR	250 MCM	#1/0	#4/0	3.50	12.88	3.00
BPCV600-90-AA	BP2CV600-90-AA	1	6	500 MCM	900 MCM	477	795	4.00	12.00	3.00
BPCV600-250-AA	BP2CV600-250-AA	1	6	2000 MCM	2500 MCM	1780	2300	4.00	13.50	4.50
BPCV600R-60-AA	BP2CV600R-60-AA	1	6 OD	350 MCM	600 MCM	336.4	477	3.25	11.00	3.00
BPCV800-25-AA*	BP2CV800-25-AA*	1	8	1/0 STR	250 MCM	1/0 STR	4/0 STR	5.00	13.88	3.00
BPCV800-200-AA*	BP2CV800-200-AA*	1	8	1500 MCM	2000 MCM	1272	1780	5.00	15.38	4.50
BPCV800R-200-AA*	BP2CV800R-200-AA*	1	8	1500 MCM	2000 MCM	1272	1780	5.00	15.38	4.50
BPCV118R-90-AA	BP2CV118R-90-AA	1	30MM	500 MCM	900 MCM	477	795	2.75	6.63	3.00
BPCV118R-125-AA	BP2CV118R-125-AA	1	30MM	900 MCM	1250 MCM	715	1113	2.75	6.75	3.25
BPCV118R-125-S-AA	BP2CV118R-125-S-AA	1	30MM	600 MCM	1250 MCM	556.5	1113	2.75	6.75	3.25
BPCV157R-125-S-AA	BP2CV157R-125-S-AA	1	40MM	600 MCM	1250 MCM	556.5	1113	2.75	6.88	3.25

***** Items with * have 6 bolts

© 2011, AFL, all rights reserved. PP-3-00274, 3, 11.8.2022
Specifications are subject to change without notice.

DOSSERT®

TYPE PFTS-N-AA

Pipe to NEMA Pad

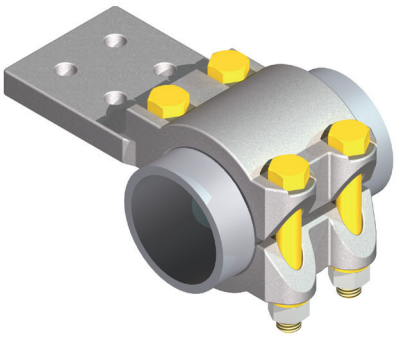

Tee tap is designed to provide terminal connections on side of tubular bus. Four clamp bolts ensure positive electrical contact. Pad conforms to NEMA standards.

Material

Aluminum Alloy

Hardware

Yellow anodized aluminum bolts, nuts and lockwashers.

Notes

- For Stainless Steel bolts, lockwashers and Everdur nuts, add "-SSHBN" to catalog number. EX: PFTS6-00-1-6N4-AA-SSHBN
- For Galvanized Steel Hardware, add "-GS" to catalog number. EX: PFTS300-1-2N-AA-GS
- *Design has 6 Bolts

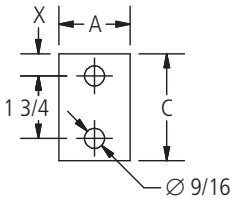

FIG. 1

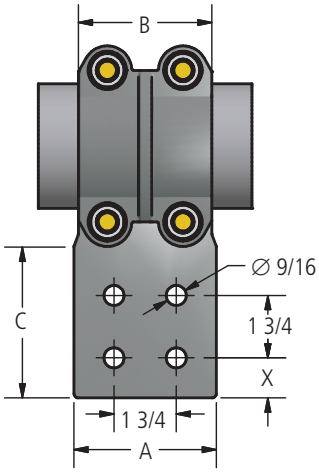

FIG. 2

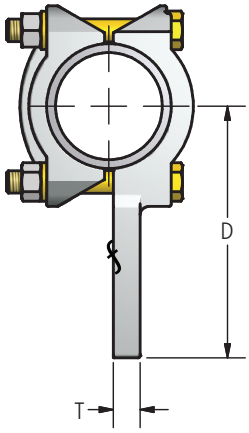

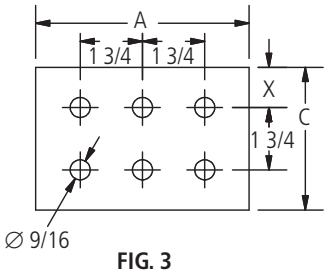

FIG. 3

Ordering Information

CATALOG NUMBER	SPS	FIG. NO.	DIMENSIONS IN INCHES						BOLT SIZE
			A	B	C	D	T	X	
PFTS75-1-2N-AA	3/4	1	2.00	2.75	3.00	4.63	0.38	0.63	1/2
PFTS75-1-4N-AA	3/4	2	3.00	2.75	3.00	4.63	0.38	0.63	1/2
PFTS100-1-2N-AA	1	1	2.00	2.75	3.00	4.81	0.38	0.63	1/2
PFTS100-1-3N-AA	1	2	3.00	2.75	3.00	4.81	0.38	0.63	1/2
PFTS100-1-4N-AA	1	2	4.00	2.75	3.00	4.81	0.38	0.63	1/2
PFTS100-1-4N4-AA	1	2	4.00	2.75	4.00	4.81	0.38	1.13	1/2
PFTS125-1-2N-AA	1 1/4	1	2.00	3.00	3.00	4.94	0.50	0.63	1/2
PFTS125-1-3N-AA	1 1/4	2	3.00	3.00	3.00	4.94	0.50	0.63	1/2
PFTS125-1-4N-AA	1 1/4	2	3.00	3.00	3.00	4.94	0.50	0.63	1/2
PFTS125-14N4-AA	1 1/4	2	4.00	3.00	4.00	5.97	0.50	1.13	1/2

© 2011, AFL, all rights reserved. PP-3-00395, Revision 6, 12.18.18
Specifications are subject to change without notice.

DOSSERT®

TYPE PFTS-N-AA (cont.)

Pipe to NEMA Pad

Ordering Information

CATALOG NUMBER	SPS	FIG. NO.	DIMENSIONS IN INCHES						BOLT SIZE
			A	B	C	D	T	X	
PFTS150-1-2N-AA	1 1/2	1	2.00	3.00	3.00	5.06	0.50	0.63	1/2
PFTS150-1-3N-AA	1 1/2	2	3.00	3.00	3.00	5.06	0.50	0.63	1/2
PFTS150-1-4N-AA	1 1/2	2	3.00	3.00	3.00	5.06	0.50	0.63	1/2
PFTS150-1-4N4-AA	1 1/2	2	4.00	3.00	4.00	6.06	0.50	1.13	1/2
PFTS200-1-2N-AA	2	1	2.00	3.25	3.00	5.31	0.63	0.63	1/2
PFTS200-1-3N-AA	2	2	3.00	3.25	3.00	5.31	0.63	0.63	1/2
PFTS200-1-4N-AA	2	2	3.00	3.25	3.00	5.31	0.63	0.63	1/2
PFTS200-1-4N4-AA	2	2	4.00	3.25	4.00	6.31	0.63	1.13	1/2
PFTS250-1-2N-AA	2 1/2	1	2.00	3.25	3.00	5.56	0.63	0.63	1/2
PFTS250-1-3N-AA	2 1/2	2	3.00	3.25	3.00	5.56	0.75	0.63	1/2
PFTS250-1-4N-AA	2 1/2	2	3.00	3.25	3.00	5.56	0.75	0.63	1/2
PFTS250-1-4N4-AA	2 1/2	2	4.00	3.25	4.00	6.56	0.75	1.13	1/2
PFTS300-1-2N-AA	3	1	2.00	3.75	3.00	6.06	0.75	0.63	5/8
PFTS300-1-3N-AA	3	2	3.00	3.75	3.00	6.06	0.75	0.63	5/8
PFTS300-1-4N-AA	3	2	3.00	3.75	3.50	6.38	0.75	0.63	5/8
PFTS300-1-4N4-AA	3	2	4.00	3.75	4.00	7.06	0.75	1.13	5/8
PFTS350-1-2N-AA	3 1/2	1	2.00	3.75	3.00	6.31	0.88	0.63	5/8
PFTS350-1-4N-AA	3 1/2	2	4.00	3.75	3.00	6.31	0.88	0.63	5/8
PFTS350-1-4N4-AA	3 1/2	2	4.00	3.75	4.00	7.31	0.88	1.13	5/8
PFTS350-1-6N4-AA	3 1/2	3	6.00	3.75	4.00	7.31	0.88	1.13	5/8
PFTS400-1-2N-AA	4	1	2.00	3.75	3.00	6.56	0.88	0.63	5/8
PFTS400-1-4N-AA	4	2	4.00	3.75	3.00	6.56	0.88	0.63	5/8
PFTS400-1-4N4-AA	4	2	4.00	3.75	4.00	7.56	0.88	1.13	5/8
PFTS400-1-6N4-AA	4	3	6.00	3.75	4.00	7.56	0.88	1.13	5/8
PFTS500-1-2N-AA	5	1	2.00	3.75	3.00	7.13	1.00	0.63	5/8
PFTS500-1-4N-AA	5	2	3.00	3.75	3.00	7.13	1.00	0.63	5/8
PFTS500-1-4N4-AA	5	2	4.00	3.75	4.00	8.09	1.00	1.13	5/8
PFTS500-1-6N4-AA	5	3	6.00	3.75	4.00	8.13	1.00	1.13	5/8
PFTS500R-1-4N4-AA	5 OD	2	4.00	3.25	4.00	7.81	1.00	1.13	5/8
PFTS600-1-4N4-AA *	6	2	4.00	6.00	4.00	8.75	1.00	1.13	5/8
PFTS600-1.125T-4N4-AA *	6	2	4.00	6.00	4.00	8.75	1.13	1.13	5/8
PFTS600-1-6N4-AA *	6	3	6.00	8.00	4.00	8.63	1.13	1.13	5/8
PFTS800R-1-4N4-AA *	8 OD	2	4.00	5.00	4.00	9.31	1.13	1.13	5/8
PFTS800R-1-6N4-AA *	8 OD	3	6.00	5.00	4.00	9.31	1.13	1.13	5/8

*Design has 6 Bolts

© 2011, AFL, all rights reserved. PP-3-00395, Revision 6, 12.18.18
Specifications are subject to change without notice.

DOSSERT®

TYPE U2T-AA, UUTT-AA

The U2T-AA is a double tap single run, and the UUTT-AA is a double tap double run. Each tap position independently takes a wide range of conductor sizes.

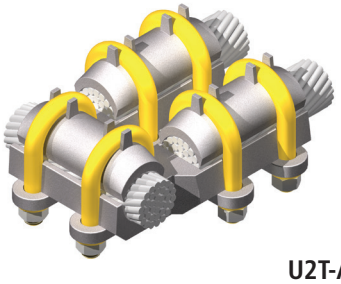

U2T-AA

Material

Aluminum Alloy

Hardware

Yellow anodized aluminum nuts, bolts and lockwashers.

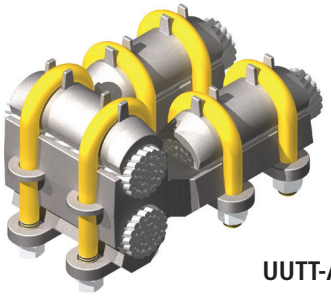

UUTT-AA

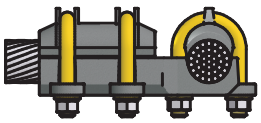

U2T-AA

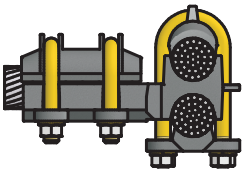

UUTT-AA

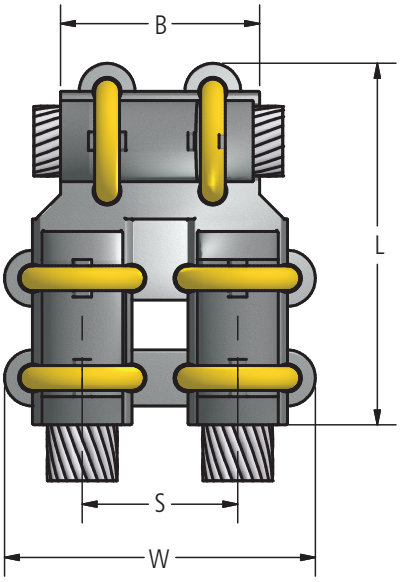

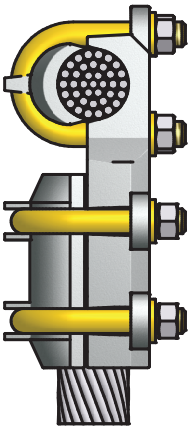

Ordering Information

CATALOG NUMBER		AAC CABLE RANGE RUN		AAC CABLE RANGE TAP		DIMENSIONS IN INCHES				U-BOLT DIAMETER	
		MIN	MAX	MIN	MAX	B	L	S	W	MAIN	TAP
U2T13-13-AA	UUTT13-13-AA	# 6 Stranded	2/0 Stranded	#6 Stranded	2/0 Stranded	3 1/4	4 1/4	1 11/16	3 1/4	5/16	5/16
U2T21-21-AA	UUTT21-21-AA	#1 Stranded	4/0 Stranded	#1 Stranded	4/0 Stranded	3 1/4	4 1/2	1 31/32	3 1/4	3/8	3/8
U2T30-13-AA	UUTT30-13-AA	1/0 Stranded	300 KCMIL	#6 Stranded	2/0 Stranded	3 1/4	4 1/4	1 11/16	3 1/4	3/8	3/8
U2T30-30-AA	UUTT30-30-AA	1/0 Stranded	300 KCMIL	1/0 Stranded	300 KCMIL	3 1/4	4 1/2	2 1/16	4	3/8	3/8
U2T50-13-AA	UUTT50-13-AA	300 KCMIL	500 KCMIL	#6 Stranded	2/0 Stranded	3 1/4	4 3/8	1 11/16	3 1/4	3/8	5/16
U2T50-21-AA	UUTT50-21-AA	300 KCMIL	500 KCMIL	#1 Stranded	4/0 Stranded	3 1/4	4 3/4	1 31/32	3 3/4	3/8	3/8
U2T50-30-AA	UUTT50-30-AA	300 KCMIL	500 KCMIL	1/0 Stranded	300 KCMIL	4 1/4	4 7/8	2 1/16	4	3/8	3/8
U2T50-50-AA	UUTT50-50-AA	300 KCMIL	500 KCMIL	300 KCMIL	500 KCMIL	4 1/4	5 1/8	2 1/4	4 3/8	3/8	3/8
U2T90-13-AA	UUTT90-13-AA	500 KCMIL	800 KCMIL	#6 Stranded	2/0 Stranded	3 1/4	5 1/4	1 11/16	3 1/4	1/2	5/16
U2T90-21-AA	UUTT90-21-AA	500 KCMIL	800 KCMIL	#1 Stranded	4/0 Stranded	3 1/4	5 7/8	1 31/32	3 3/4	1/2	3/8

© 2011, AFL, all rights reserved. PP-3-00488, Revision 0, 1.12.11
Specifications are subject to change without notice.

DOSSERT®

TYPE U2T-AA, UUTT-AA

The U2T-AA is a double tap single run, and the UUTT-AA is a double tap double run.

Ordering Information

CATALOG NUMBER		AAC CABLE RANGE RUN		AAC CABLE RANGE TAP		DIMENSIONS IN INCHES				U-BOLT DIAMETER	
		MIN	MAX	MIN	MAX	B	L	S	W	MAIN	TAP
U2T13-13-AA	UUTT13-13-AA	# 6 Stranded	2/0 Stranded	#6 Stranded	2/0 Stranded	3 1/4	4 1/4	1 11/16	3 1/4	5/16	5/16
U2T21-21-AA	UUTT21-21-AA	#1 Stranded	4/0 Stranded	#1 Stranded	4/0 Stranded	3 1/4	4 1/2	1 31/32	3 1/4	3/8	3/8
U2T30-13-AA	UUTT30-13-AA	1/0 Stranded	300 KCMIL	#6 Stranded	2/0 Stranded	3 1/4	4 1/4	1 11/16	3 1/4	3/8	3/8
U2T30-30-AA	UUTT30-30-AA	1/0 Stranded	300 KCMIL	1/0 Stranded	300 KCMIL	3 1/4	4 1/2	2 1/16	4	3/8	3/8
U2T50-13-AA	UUTT50-13-AA	300 KCMIL	500 KCMIL	#6 Stranded	2/0 Stranded	3 1/4	4 3/8	1 11/16	3 1/4	3/8	5/16
U2T50-21-AA	UUTT50-21-AA	300 KCMIL	500 KCMIL	#1 Stranded	4/0 Stranded	3 1/4	4 3/4	1 31/32	3 3/4	3/8	3/8
U2T50-30-AA	UUTT50-30-AA	300 KCMIL	500 KCMIL	1/0 Stranded	300 KCMIL	4 1/4	4 7/8	2 1/16	4	3/8	3/8
U2T50-50-AA	UUTT50-50-AA	300 KCMIL	500 KCMIL	300 KCMIL	500 KCMIL	4 1/4	5 1/8	2 1/4	4 3/8	3/8	3/8
U2T90-13-AA	UUTT90-13-AA	500 KCMIL	800 KCMIL	#6 Stranded	2/0 Stranded	3 1/4	5 1/4	1 11/16	3 1/4	1/2	5/16
U2T90-21-AA	UUTT90-21-AA	500 KCMIL	800 KCMIL	#1 Stranded	4/0 Stranded	3 1/4	5 7/8	1 31/32	3 3/4	1/2	3/8
U2T90-30-AA	UUTT90-30-AA	500 KCMIL	800 KCMIL	1/0 Stranded	300 KCMIL	4 1/4	6	2 1/16	4	1/2	3/8
U2T90-50-AA	UUTT90-50-AA	500 KCMIL	800 KCMIL	300 KCMIL	500 KCMIL	4 1/4	6 1/4	2 1/4	4 3/8	1/2	3/8
U2T90-90-AA	UUTT90-90-AA	500 KCMIL	800 KCMIL	500 KCMIL	800 KCMIL	5 1/4	6 1/2	2 27/32	5 1/2	1/2	1/2
U2T100-13-AA	UUTT100-13-AA	750 KCMIL	1000 KCMIL	#6 Stranded	2/0 Stranded	4 1/4	5 1/2	1 11/16	3 1/4	1/2	5/16
U2T100-21-AA	UUTT100-21-AA	750 KCMIL	1000 KCMIL	#1 Stranded	4/0 Stranded	4 1/4	5 5/8	1 31/32	3 3/4	1/2	3/8
U2T100-30-AA	UUTT100-30-AA	750 KCMIL	1000 KCMIL	1/0 Stranded	300 KCMIL	4 1/4	5 3/4	2 1/16	4	1/2	3/8
U2T100-50-AA	UUTT100-50-AA	750 KCMIL	1000 KCMIL	300 KCMIL	500 KCMIL	4 1/4	6	2 1/4	4 3/8	1/2	3/8
U2T100-90-AA	UUTT100-90-AA	750 KCMIL	1000 KCMIL	500 KCMIL	800 KCMIL	5 1/4	6 1/4	2 27/32	5 1/2	1/2	1/2
U2T100-100-AA	UUTT100-100-AA	750 KCMIL	1000 KCMIL	750 KCMIL	1000 KCMIL	5 1/4	6 1/2	3	5 7/8	1/2	1/2
U2T150-13-AA	UUTT150-13-AA	1000 KCMIL	1500 KCMIL	#6 Stranded	2/0 Stranded	4 1/4	5 3/4	1 11/16	3 1/4	1/2	5/16
U2T150-21-AA	UUTT150-21-AA	1000 KCMIL	1500 KCMIL	#1 Stranded	4/0 Stranded	4 1/4	5 7/8	1 31/32	3 3/4	1/2	3/8
U2T150-30-AA	UUTT150-30-AA	1000 KCMIL	1500 KCMIL	1/0 Stranded	300 KCMIL	4 1/4	6	2 1/16	4	1/2	3/8
U2T150-50-AA	UUTT150-50-AA	1000 KCMIL	1500 KCMIL	300 KCMIL	500 KCMIL	4 1/4	6 1/4	2 1/4	4 3/8	1/2	3/8
U2T150-90-AA	UUTT150-90-AA	1000 KCMIL	1500 KCMIL	500 KCMIL	800 KCMIL	5 1/4	6 1/2	2 27/32	5 1/2	1/2	1/2
U2T150-100-AA	UUTT150-100-AA	1000 KCMIL	1500 KCMIL	750 KCMIL	1000 KCMIL	5 1/4	6 3/4	3	5 7/8	1/2	1/2
U2T150-150-AA	UUTT150-150-AA	1000 KCMIL	1500 KCMIL	1000 KCMIL	1500 KCMIL	6	7 1/4	3 1/4	6 5/8	1/2	1/2
U2T200-30-AA	UUTT200-30-AA	1500 KCMIL	2000 KCMIL	1/0 Stranded	300 KCMIL	4 1/4	6 1/4	2 1/16	4	1/2	3/8
U2T200-50-AA	UUTT200-50-AA	1500 KCMIL	2000 KCMIL	300 KCMIL	500 KCMIL	4 1/4	6 1/2	2 1/4	4 3/8	1/2	3/8
U2T200-90-AA	UUTT200-90-AA	1500 KCMIL	2000 KCMIL	500 KCMIL	800 KCMIL	5 1/4	6 3/4	2 27/32	5 1/2	1/2	1/2
U2T200-100-AA	UUTT200-100-AA	1500 KCMIL	2000 KCMIL	750 KCMIL	1000 KCMIL	5 1/4	7	3	5 7/8	1/2	1/2
U2T200-150-AA	UUTT200-150-AA	1500 KCMIL	2000 KCMIL	1000 KCMIL	1500 KCMIL	6 3/8	7 1/2	3 1/4	6 5/8	1/2	1/2
U2T200-200-AA	UUTT200-200-AA	1500 KCMIL	2000 KCMIL	1500 KCMIL	2000 KCMIL	6 3/8	8	3 1/2	6 7/8	5/8	1/2

© 2011, AFL, all rights reserved. PP-3-00488, Revision 0, 1.12.11
Specifications are subject to change without notice.

DOSSERT®

TYPE UPT-AA

U-bolt Pipe to Cable Tee Connector

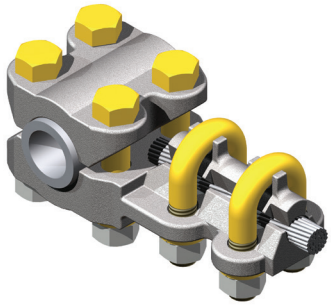

Tee connector is designed for connecting stranded aluminum or ACSR conductor to tubular bus. Four clamp bolts on each conductor insures positive electrical contact.

Material

Aluminum Alloy

Hardware

Yellow anodized aluminum bolts, U-bolt, nuts, and lockwashers.

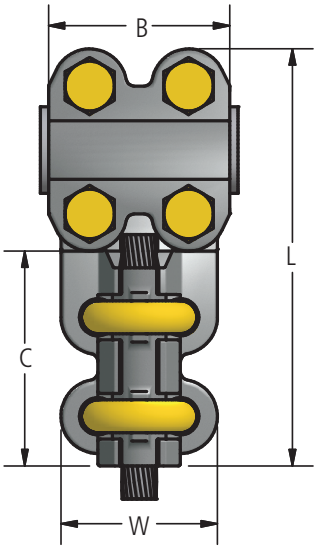

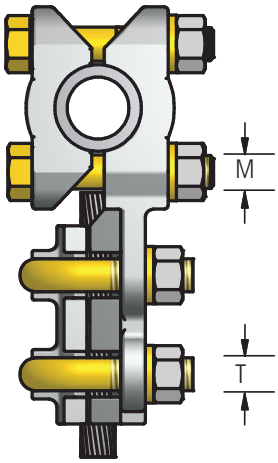

Ordering Information

CATALOG NUMBER	SPS	AAC CABLE RANGE		DIMENSIONS IN INCHES					
		MIN	MAX	B	C	L	M	T	W
UPT50-13-AA	1/2	6STR	2/0STR	2 1/2	3	5 3/4	1/2	1/2	2 1/8
UPT50-21-AA	1/2	1STR	4/0STR	2 1/2	3	5 3/4	1/2	1/2	2 7/32
UPT50-30-AA	1/2	1/0STR	300MCM	2 1/2	3 1/4	6	1/2	1/2	2 5/16
UPT75-13-AA	3/4	6STR	2/0STR	2 3/4	3	6	1/2	1/2	2 1/8
UPT75-21-AA	3/4	1STR	4/0STR	2 3/4	3	6	1/2	1/2	2 7/32
UPT75-30-AA	3/4	1/0STR	300MCM	2 3/4	3 1/4	6 1/4	1/2	1/2	2 5/16
UPT75-50-AA	3/4	300MCM	500MCM	2 3/4	3 1/4	6 1/4	1/2	1/2	2 1/2
UPT100-13-AA	1	6STR	2/0STR	2 3/4	3	6 1/4	1/2	1/2	2 1/8
UPT100-21-AA	1	1STR	4/0STR	2 3/4	3	6 1/4	1/2	1/2	2 7/32
UPT100-30-AA	1	1/0STR	300MCM	2 3/4	3 1/4	6 1/2	1/2	1/2	2 5/16
UPT100-50-AA	1	300MCM	500MCM	2 3/4	3 1/4	6 1/2	1/2	1/2	2 1/2
UPT100-90-AA	1	500MCM	900MCM	2 3/4	3 1/2	6 3/4	1/2	1/2	2 13/16
UPT125-13-AA	1 1/4	6STR	2/0STR	3	3	6 5/8	1/2	1/2	2 1/8

© 2011, AFL, all rights reserved. PP-3-00512, Revision 1, 4.16.18
Specifications are subject to change without notice.

DOSSERT®

TYPE UPT-AA

U-bolt Pipe to Cable Tee Connector

Ordering Information

CATALOG NUMBER	SPS	AAC CABLE RANGE		DIMENSIONS IN INCHES					
		MIN	MAX	B	C	L	M	T	W
UPT125-21-AA	1 1/4	1STR	4/0STR	3	3	6 5/8	1/2	1/2	2 7/32
UPT125-30-AA	1 1/4	1/0STR	300MCM	3	3 1/4	6 7/8	1/2	1/2	2 5/16
UPT125-50-AA	1 1/4	300MCM	500MCM	3	3 1/4	6 7/8	1/2	1/2	2 1/2
UPT125-90-AA	1 1/4	500MCM	900MCM	3	3 1/2	7 1/8	1/2	1/2	2 13/16
UPT125-100-AA	1 1/4	750MCM	1000MCM	3	3 1/2	7 1/8	1/2	1/2	2 27/32
UPT150-13-AA	1 1/2	6STR	2/0STR	3	3	6 7/8	1/2	1/2	2 7/32
UPT150-21-AA	1 1/2	1STR	4/0STR	3	3	6 7/8	1/2	1/2	2 7/32
UPT150-30-AA	1 1/2	1/0STR	300MCM	3	3 1/4	7 1/8	1/2	1/2	2 5/16
UPT150-50-AA	1 1/2	300MCM	500MCM	3	3 1/4	7 1/8	1/2	1/2	2 1/2
UPT150-90-AA	1 1/2	500MCM	900MCM	3	3 1/2	7 3/8	1/2	1/2	2 13/16
UPT150-100-AA	1 1/2	800MCM	1000MCM	3	3 1/2	7 3/8	1/2	1/2	2 27/32
UPT150-150-AA	1 1/2	1000MCM	1500MCM	3	4 1/2	8 3/8	1/2	5/8	3 1/4
UPT150-200-AA	1 1/2	1500MCM	2000MCM	3	4 1/2	8 3/8	1/2	5/8	3 3/4
UPT200-21-AA	2	1STR	4/0STR	3 1/4	3	7 3/8	1/2	1/2	2 7/32
UPT200-30-AA	2	1/0STR	300MCM	3 1/4	3 1/4	7 5/8	1/2	1/2	2 5/16
UPT200-50-AA	2	300MCM	500MCM	3 1/4	3 1/4	7 5/8	1/2	1/2	2 1/2
UPT200-90-AA	2	500MCM	900MCM	3 1/4	3 1/2	7 7/8	1/2	1/2	2 13/16
UPT200-100-AA	2	750MCM	1000MCM	3 1/4	3 1/2	7 7/8	1/2	1/2	2 27/32
UPT200-150-AA	2	1000MCM	1500MCM	3 1/4	4 1/2	8 7/8	1/2	5/8	3 1/4
UPT200-200-AA	2	1500MCM	2000MCM	3 1/4	4 1/2	8 7/8	1/2	5/8	3 3/4
UPT250-30-AA	2 1/2	1/0STR	300MCM	3 1/4	3 1/4	8 1/8	1/2	1/2	2 5/16
UPT250-50-AA	2 1/2	300MCM	500MCM	3 1/4	3 1/4	8 1/8	1/2	1/2	2 1/2
UPT250-90-AA	2 1/2	500MCM	900MCM	3 1/4	3 1/2	8 3/8	1/2	1/2	2 13/16
UPT250-100-AA	2 1/2	750MCM	1000MCM	3 1/4	3 1/2	8 3/8	1/2	1/2	2 27/32
UPT250-150-AA	2 1/2	1000MCM	1500MCM	3 1/4	4 1/2	9 3/8	1/2	5/8	3 1/4
UPT250-200-AA	2 1/2	1500MCM	2000MCM	3 1/4	4 1/2	9 3/8	1/2	5/8	3 3/4
UPT300-30-AA	3	1/0STR	300MCM	3 1/4	3 1/4	8 3/4	1/2	1/2	2 5/16
UPT300-50-AA	3	300MCM	500MCM	3 1/4	3 1/4	8 3/4	1/2	1/2	2 1/2
UPT300-90-AA	3	500MCM	900MCM	3 1/2	3 1/2	9	1/2	1/2	2 13/16
UPT300-100-AA	3	750MCM	1000MCM	3 1/4	3 1/2	9	1/2	1/2	2 27/32
UPT300-150-AA	3	1000MCM	1500MCM	3 3/4	4 1/2	10 3/8	5/8	5/8	3 1/4
UPT300-200-AA	3	1500MCM	2000MCM	3 3/4	4 1/2	10 3/8	5/8	5/8	3 3/4
UPT400-30-AA	4	1/0STR	300MCM	3 3/4	4 1/2	10 3/8	5/8	5/8	2 5/16
UPT500-150-AA	5	1000MCM	1500MCM	3 3/4	4	10 3/8	5/8	5/8	3 1/4

© 2011, AFL, all rights reserved. PP-3-00512, Revision 1, 4.16.18
Specifications are subject to change without notice.

DOSSERT®

TYPE UT-AA, UUT-AA

U-bolt Tee Connector

A rugged U-bolt high compression clamp type tee connector which takes a wide range of cable sizes in both the run and tap sections. Designed to withstand high compressive clamping action on all cables within specified cable ranges.

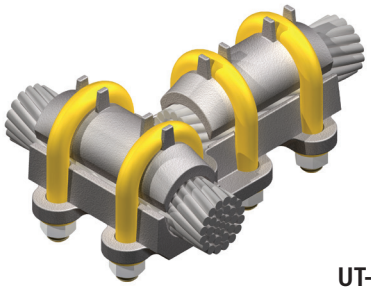

UT-AA

Material

Aluminum Alloy

Hardware

Yellow anodized aluminum U-bolts, nuts, and lockwashers.

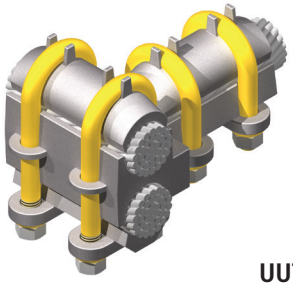

UUT-AA

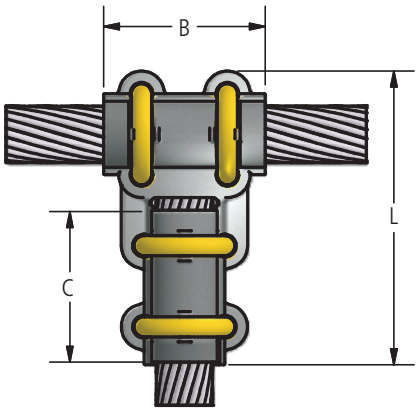

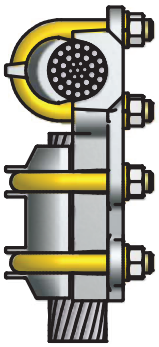

UT-AA

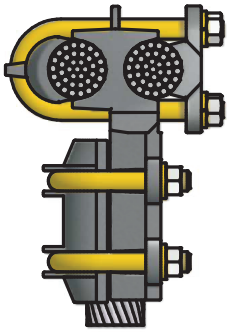

UUT-AA

continued

© 2011, AFL, all rights reserved. PP-3-00532. Revision 3, 7.11.19
Specifications are subject to change without notice.

DOSSERT®

TYPE UT-AA, UUT-AA

U-bolt Tee Connector

Ordering Information

AAC CONDUCTOR										
CATALOG NUMBER		CABLE RANGE				DIMENSION IN INCHES				
UT-AA	UUT-AA	RUN		TAP		B	C	L	U-BOLT	
		MIN	MAX	MIN	MAX				RUN	TAP
UT13-13-AA	UUT13-13-AA	#6 STR	2/0 STR	#6 STR	2/0 STR	3.00	3.00	5.38	1/2	1/2
UT21-13-AA	UUT21-13-AA	#1 STR	4/0 STR	#6 STR	2/0 STR	3.00	3.00	5.50	1/2	1/2
UT21-21-AA	UUT21-21-AA	#1 STR	4/0 STR	#1 STR	4/0 STR	3.00	3.00	5.50	1/2	1/2
UT30-13-AA	UUT30-13-AA	1/0 STR	300 MCM	#6 STR	2/0 STR	3.25	3.00	5.63	1/2	1/2
UT30-21-AA	UUT30-21-AA	1/0 STR	300 MCM	#1 STR	4/0 STR	3.25	3.00	5.63	1/2	1/2
UT30-30-AA	UUT30-30-AA	1/0 STR	300 MCM	1/0 STR	300 MCM	3.25	3.25	5.88	1/2	1/2
UT50-13-AA	UUT50-13-AA	300 MCM	500 MCM	#6 STR	2/0 STR	3.25	3.00	5.75	1/2	1/2
UT50-21-AA	UUT50-21-AA	300 MCM	500 MCM	#1 STR	4/0 STR	3.25	3.00	5.75	1/2	1/2
UT50-30-AA	UUT50-30-AA	300 MCM	500 MCM	1/0 STR	300 MCM	3.25	3.25	6.00	1/2	1/2
UT50-50-AA	UUT50-50-AA	300 MCM	500 MCM	300 MCM	500 MCM	3.25	3.25	6.00	1/2	1/2
UT90-13-AA	UUT90-13-AA	500 MCM	900 MCM	#6 STR	2/0 STR	3.50	3.00	6.06	1/2	1/2
UT90-21-AA	UUT90-21-AA	500 MCM	900 MCM	#1 STR	4/0 STR	3.50	3.00	6.06	1/2	1/2
UT90-30-AA	UUT90-30-AA	500 MCM	900 MCM	1/0 STR	300 MCM	3.50	3.25	6.31	1/2	1/2
UT90-50-AA	UUT90-50-AA	500 MCM	900 MCM	300 MCM	500 MCM	3.50	3.25	6.31	1/2	1/2
UT90-90-AA	UUT90-90-AA	500 MCM	900 MCM	500 MCM	900 MCM	3.50	3.50	6.56	1/2	1/2
UT100-30-AA	UUT100-30-AA	750 MCM	1000 MCM	1/0 STR	300 MCM	3.50	3.25	6.38	1/2	1/2
UT100-50-AA	UUT100-50-AA	750 MCM	1000 MCM	300 MCM	500 MCM	3.50	3.25	6.38	1/2	1/2
UT100-90-AA	UUT100-90-AA	750 MCM	1000 MCM	500 MCM	900 MCM	3.50	3.50	6.63	1/2	1/2
UT100-100-AA	UUT100-100-AA	750 MCM	1000 MCM	750 MCM	1000 MCM	3.50	3.50	6.63	1/2	1/2
UT125-30-AA	UUT125-30-AA	600 MCM	1250 MCM	1/0 STR	300 MCM	3.50	3.25	6.50	1/2	1/2
UT125-50-AA	UUT125-50-AA	600 MCM	1250 MCM	300 MCM	500 MCM	3.50	3.25	6.50	1/2	1/2
UT125-90-AA	UUT125-90-AA	600 MCM	1250 MCM	500 MCM	900 MCM	3.50	3.50	6.75	1/2	1/2
UT125-100-AA	UUT125-100-AA	600 MCM	1250 MCM	750 MCM	1000 MCM	3.50	3.50	6.75	1/2	1/2
UT125-125-AA	UUT125-125-AA	600 MCM	1250 MCM	600 MCM	1250 MCM	3.50	3.50	6.75	1/2	1/2
UT150-30-AA	UUT150-30-AA	1000 MCM	1500 MCM	1/0 STR	300 MCM	4.50	3.25	6.88	5/8	1/2
UT150-50-AA	UUT150-50-AA	1000 MCM	1500 MCM	300 MCM	500 MCM	4.50	3.25	6.88	5/8	1/2
UT150-90-AA	UUT150-90-AA	1000 MCM	1500 MCM	500 MCM	900 MCM	4.50	3.50	7.13	5/8	1/2
UT150-100-AA	UUT150-100-AA	1000 MCM	1500 MCM	750 MCM	1000 MCM	4.50	3.50	7.13	5/8	1/2
UT150-150-AA	UUT150-150-AA	1000 MCM	1500 MCM	1000 MCM	1500 MCM	4.50	4.50	8.00	5/8	5/8
UT200-30-AA	UUT200-30-AA	1500 MCM	2000 MCM	1/0 STR	300 MCM	4.50	3.25	7.06	5/8	1/2
UT200-50-AA	UUT200-50-AA	1500 MCM	2000 MCM	300 MCM	500 MCM	4.50	3.25	7.06	5/8	1/2
UT200-90-AA	UUT200-90-AA	1500 MCM	2000 MCM	500 MCM	900 MCM	4.50	3.50	7.31	5/8	1/2
UT200-100-AA	UUT200-100-AA	1500 MCM	2000 MCM	750 MCM	1000 MCM	4.50	3.50	7.31	5/8	1/2
UT200-150-AA	UUT200-150-AA	1500 MCM	2000 MCM	1000 MCM	1500 MCM	4.50	4.50	8.31	5/8	5/8
UT200-200-AA	UUT200-200-AA	1500 MCM	2000 MCM	1500 MCM	2000 MCM	4.50	4.50	8.31	5/8	5/8
UT250-30-AA	UUT250-30-AA	2000 MCM	2500 MCM	1/0 STR	300 MCM	4.50	3.25	7.56	5/8	1/2
UT250-50-AA	UUT250-50-AA	2000 MCM	2500 MCM	300 MCM	500 MCM	4.50	3.25	7.31	5/8	1/2
UT250-90-AA	UUT250-90-AA	2000 MCM	2500 MCM	500 MCM	900 MCM	4.50	3.50	7.56	5/8	1/2
UT250-100-AA	UUT250-100-AA	2000 MCM	2500 MCM	750 MCM	1000 MCM	4.50	3.50	7.56	5/8	1/2
UT250-150-AA	UUT250-150-AA	2000 MCM	2500 MCM	1000 MCM	1500 MCM	4.50	4.50	8.56	5/8	5/8
UT250-200-AA	UUT250-200-AA	2000 MCM	2500 MCM	1500 MCM	2000 MCM	4.50	4.50	8.56	5/8	5/8
UT250-250-AA	UUT250-250-AA	2000 MCM	2500 MCM	2000 MCM	2500 MCM	4.50	4.50	8.56	5/8	5/8

continued

© 2011, AFL, all rights reserved. PP-3-00532. Revision 3, 7.11.19
Specifications are subject to change without notice.

DOSSERT®

TYPE UT-AA, UUT-AA

U-bolt Tee Connector

Ordering Information

ACSR CONDUCTOR										
CATALOG NUMBER		CABLE RANGE				DIMENSION IN INCHES				
UT-AA	UUT-AA	RUN		TAP		B	C	L	U-BOLT	
		MIN	MAX	MIN	MAX				RUN	TAP
UT13-13-AA	UUT13-13-AA	6 (6/1)	2/0 (6/1)	6 (6/1)	2/0 (6/1)	3.00	3.00	5.38	1/2	1/2
UT21-13-AA	UUT21-13-AA	1 (6/1)	3/0 (6/1)	6 (6/1)	2/0 (6/1)	3.00	3.00	5.50	1/2	1/2
UT21-21-AA	UUT21-21-AA	1 (6/1)	3/0 (6/1)	1 (6/1)	3/0 (6/1)	3.00	3.00	5.50	1/2	1/2
UT30-13-AA	UUT30-13-AA	1/0 (6/1)	266.8 (18/1)	6 (6/1)	2/0 (6/1)	3.25	3.00	5.63	1/2	1/2
UT30-21-AA	UUT30-21-AA	1/0 (6/1)	266.8 (18/1)	1 (6/1)	3/0 (6/1)	3.25	3.00	5.63	1/2	1/2
UT30-30-AA	UUT30-30-AA	1/0 (6/1)	266.8 (18/1)	1/0 (6/1)	266.8 (18/1)	3.25	3.25	5.88	1/2	1/2
UT50-13-AA	UUT50-13-AA	266.8 (6/7)	477 (18/1)	6 (6/1)	2/0 (6/1)	3.25	3.00	5.75	1/2	1/2
UT50-21-AA	UUT50-21-AA	266.8 (6/7)	477 (18/1)	1 (6/1)	3/0 (6/1)	3.25	3.00	5.75	1/2	1/2
UT50-30-AA	UUT50-30-AA	266.8 (6/7)	477 (18/1)	1/0 (6/1)	266.8 (18/1)	3.25	3.25	6.00	1/2	1/2
UT50-50-AA	UUT50-50-AA	266.8 (6/7)	477 (18/1)	266.8 (6/7)	477 (18/1)	3.25	3.25	6.00	1/2	1/2
UT90-13-AA	UUT90-13-AA	477 (18/1)	795 (54/7)	6 (6/1)	2/0 (6/1)	3.50	3.00	6.06	1/2	1/2
UT90-21-AA	UUT90-21-AA	477 (18/1)	795 (54/7)	1 (6/1)	3/0 (6/1)	3.50	3.00	6.06	1/2	1/2
UT90-30-AA	UUT90-30-AA	477 (18/1)	795 (54/7)	1/0 (6/1)	266.8 (18/1)	3.50	3.25	6.31	1/2	1/2
UT90-50-AA	UUT90-50-AA	477 (18/1)	795 (54/7)	266.8 (6/7)	477 (18/1)	3.50	3.25	6.31	1/2	1/2
UT90-90-AA	UUT90-90-AA	477 (18/1)	795 (54/7)	477 (18/1)	795 (54/7)	3.50	3.50	6.56	1/2	1/2
UT100-30-AA	UUT100-30-AA	636 (30/19)	900 (45/7)	1/0 (6/1)	266.8 (18/1)	3.50	3.25	6.38	1/2	1/2
UT100-50-AA	UUT100-50-AA	636 (30/19)	900 (45/7)	266.8 (6/7)	477 (18/1)	3.50	3.25	6.38	1/2	1/2
UT100-90-AA	UUT100-90-AA	636 (30/19)	900 (45/7)	477 (18/1)	795 (54/7)	3.50	3.50	6.63	1/2	1/2
UT100-100-AA	UUT100-100-AA	636 (30/19)	900 (45/7)	636 (30/19)	900 (45/7)	3.50	3.50	6.63	1/2	1/2
UT125-30-AA	UUT125-30-AA	636 (36/1)	1113 (54/19)	1/0 (6/1)	266.8 (18/1)	3.50	3.25	6.50	1/2	1/2
UT125-50-AA	UUT125-50-AA	636 (36/1)	1113 (54/19)	266.8 (6/7)	477 (18/1)	3.50	3.25	6.50	1/2	1/2
UT125-90-AA	UUT125-90-AA	636 (36/1)	1113 (54/19)	477 (18/1)	795 (54/7)	3.50	3.50	6.75	1/2	1/2
UT125-100-AA	UUT125-100-AA	636 (36/1)	1113 (54/19)	636 (30/19)	900 (45/7)	3.50	3.50	6.75	1/2	1/2
UT125-125-AA	UUT125-125-AA	636 (36/1)	1113 (54/19)	636 (36/1)	1113 (54/19)	3.50	3.50	6.75	1/2	1/2
UT150-30-AA	UUT150-30-AA	954 (45/7)	1351.5 (45/7)	1/0 (6/1)	266.8 (18/1)	4.50	3.25	6.88	5/8	1/2
UT150-50-AA	UUT150-50-AA	954 (45/7)	1351.5 (45/7)	266.8 (6/7)	477 (18/1)	4.50	3.25	6.88	5/8	1/2
UT150-90-AA	UUT150-90-AA	954 (45/7)	1351.5 (45/7)	477 (18/1)	795 (54/7)	4.50	3.50	7.13	5/8	1/2
UT150-100-AA	UUT150-100-AA	954 (45/7)	1351.5 (45/7)	636 (30/19)	900 (45/7)	4.50	3.50	7.13	5/8	1/2
UT150-150-AA	UUT150-150-AA	954 (45/7)	1351.5 (45/7)	954 (45/7)	1351.5 (45/7)	4.50	4.50	8.00	5/8	5/8
UT200-30-AA	UUT200-30-AA	1351.3 (45/7)	1780 (84/19)	1/0 (6/1)	266.8 (18/1)	4.50	3.25	7.06	5/8	1/2
UT200-50-AA	UUT200-50-AA	1351.3 (45/7)	1780 (84/19)	266.8 (6/7)	477 (18/1)	4.50	3.25	7.06	5/8	1/2
UT200-90-AA	UUT200-90-AA	1351.3 (45/7)	1780 (84/19)	477 (18/1)	795 (54/7)	4.50	3.50	7.31	5/8	1/2
UT200-100-AA	UUT200-100-AA	1351.3 (45/7)	1780 (84/19)	636 (30/19)	900 (45/7)	4.50	3.50	7.31	5/8	1/2
UT200-150-AA	UUT200-150-AA	1351.3 (45/7)	1780 (84/19)	954 (45/7)	1351.5 (45/7)	4.50	4.50	8.31	5/8	5/8
UT200-200-AA	UUT200-200-AA	1351.3 (45/7)	1780 (84/19)	1351.3 (45/7)	1780 (84/19)	4.50	4.50	8.31	5/8	5/8
UT250-30-AA	UUT250-30-AA	2034 (72/7)	2312 (76/19)	1/0 (6/1)	266.8 (18/1)	4.50	3.25	7.56	5/8	1/2
UT250-50-AA	UUT250-50-AA	2034 (72/7)	2312 (76/19)	266.8 (6/7)	477 (18/1)	4.50	3.25	7.31	5/8	1/2
UT250-90-AA	UUT250-90-AA	2034 (72/7)	2312 (76/19)	477 (18/1)	795 (54/7)	4.50	3.50	7.56	5/8	1/2
UT250-100-AA	UUT250-100-AA	2034 (72/7)	2312 (76/19)	636 (30/19)	900 (45/7)	4.50	3.50	7.56	5/8	1/2
UT250-150-AA	UUT250-150-AA	2034 (72/7)	2312 (76/19)	954 (45/7)	1351.5 (45/7)	4.50	4.50	8.56	5/8	5/8
UT250-200-AA	UUT250-200-AA	2034 (72/7)	2312 (76/19)	1351.3 (45/7)	1780 (84/19)	4.50	4.50	8.56	5/8	5/8
UT250-250-AA	UUT250-250-AA	2034 (72/7)	2312 (76/19)	2034 (72/7)	2312 (76/19	4.50	4.50	8.56	5/8	5/8

© 2011, AFL, all rights reserved. PP-3-00532. Revision 3, 7.11.19
Specifications are subject to change without notice.

DOSSERT®

TYPE VBP-20-AA, VBP-30-AA

20 Degree and 30 Degree Vee Connection

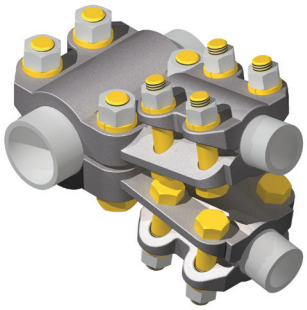

A-frame connectors are designed to make fast, reliable A-frame assemblies. Connectors can be used on Schedule 40 and Schedule 80 pipe.

Material

Aluminum Alloy

Hardware

Yellow anodized aluminum bolts, nuts, and lockwashers.

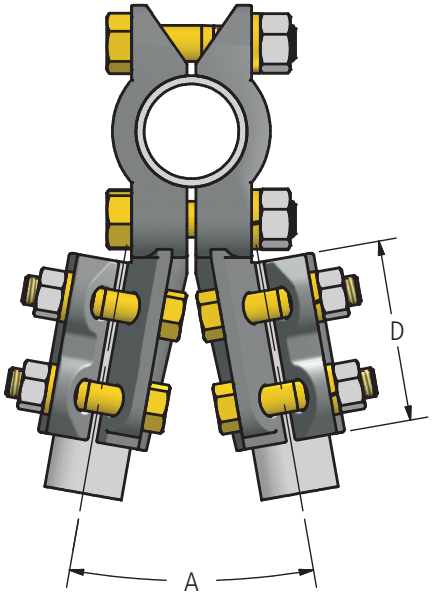

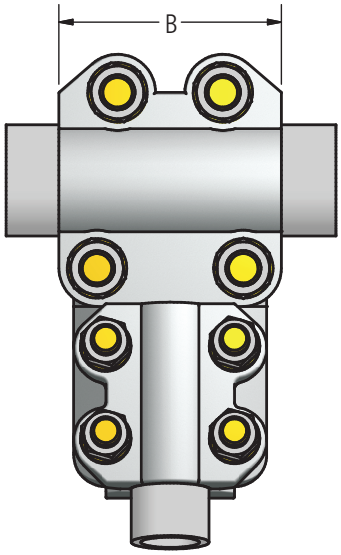

Ordering Information

CATALOG NUMBER		SPS		DIMENSIONS IN INCHES		BOLT SIZE
A = 20 DEGREE	A = 30 DEGREE	RUN	TAP	B	D	
VBP100-75-20-AA	VBP100-75-30-AA	1	3/4	2 3/4	2 3/4	1/2
VBP100-100-20-AA	VBP100-100-30-AA	1	1	2 3/4	2 3/4	1/2
VBP125-75-20-AA	VBP125-75-30-AA	1-1/4	3/4	3	2 3/4	1/2
VBP125-100-20-AA	VBP125-100-30-AA	1-1/4	1	3	2 3/4	1/2
VBP150-100-20-AA	VBP150-100-30-AA	1-1/2	1	3	2 3/4	1/2
VBP150-125-20-AA	VBP150-125-30-AA	1-1/2	1-1/4	3	3	1/2
VBP150-150-20-AA	VBP150-150-30-AA	1-1/2	1-1/2	3	3	1/2
VBP200-100-20-AA	VBP200-100-30-AA	2	1	3 1/4	2 3/4	1/2
VBP200-125-20-AA	VBP200-125-30-AA	2	1-1/4	3 1/4	3	1/2
VBP200-150-20-AA	VBP200-150-30-AA	2	1-1/2	3 1/4	3	1/2
VBP200-200-20-AA	VBP200-200-30-AA	2	2	3 1/4	3 1/4	1/2
VBP250-100-20-AA	VBP250-100-30-AA	2-1/2	1	3 1/4	2 3/4	1/2
VBP250-125-20-AA	VBP250-125-30-AA	2-1/2	1-1/4	3 1/4	3	1/2
VBP250-150-20-AA	VBP250-150-30-AA	2-1/2	1-1/2	3 1/4	3	1/2
VBP250-200-20-AA	VBP250-200-30-AA	2-1/2	2	3 1/4	3 1/4	1/2

© 2011, AFL, all rights reserved. PP-3-00517, Revision 3, 6.15.2023
Specifications are subject to change without notice.

DOSSERT®

TYPE VBP-20-AA, VBP-30-AA

20 Degree and 30 Degree Vee Connection

Ordering Information

CATALOG NUMBER		SPS		DIMENSIONS IN INCHES		BOLT SIZE
A = 20 DEGREE	A = 30 DEGREE	RUN	TAP	B	D	
VBP250-250-20-AA	VBP250-250-30-AA	2 1/2	2 1/2	3 1/4	3 1/4	1/2
VBP300-100-20-AA	VBP300-100-30-AA	3	1	3 1/4	2 3/4	1/2
VBP300-125-20-AA	VBP300-125-30-AA	3	1 1/4	3 1/4	3	1/2
VBP300-150-20-AA	VBP300-150-30-AA	3	1 1/2	3 1/4	3	1/2
VBP300-200-20-AA	VBP300-200-30-AA	3	2	3 1/4	3 1/4	1/2
VBP300-250-20-AA	VBP300-250-30-AA	3	2 1/2	3 1/4	3 1/4	1/2
VBP300-300-20-AA	VBP300-300-30-AA	3	3	3 3/4	3 3/4	5/8
VBP350-100-20-AA	VBP350-100-30-AA	3 1/2	1	3 1/4	2 3/4	1/2
VBP350-125-20-AA	VBP350-125-30-AA	3 1/2	1 1/4	3 1/4	3	1/2
VBP350-150-20-AA	VBP350-150-30-AA	3 1/2	1 1/2	3 1/4	3	1/2
VBP350-200-20-AA	VBP350-200-30-AA	3 1/2	2	3 1/4	3 1/4	1/2
VBP350-250-20-AA	VBP350-250-30-AA	3 1/2	2 1/2	3 1/2	3 1/4	1/2
VBP350-300-20-AA	VBP350-300-30-AA	3 1/2	3	3 3/4	3 3/4	5/8
VBP400-125-20-AA	VBP400-125-30-AA	4	1 1/4	3 1/4	3	1/2
VBP400-150-20-AA	VBP400-150-30-AA	4	1 1/2	3 1/4	3	1/2
VBP400-200-20-AA	VBP400-200-30-AA	4	2	3 1/4	3 1/4	1/2
VBP400-250-20-AA	VBP400-250-30-AA	4	2 1/2	3 1/4	3 1/4	1/2
VBP400-300-20-AA	VBP400-300-30-AA	4	3	3 3/4	3 3/4	5/8
VBP400-400-20-AA	VBP400-400-30-AA	4	4	3 3/4	3 3/4	5/8
VBP500-150-20-AA	VBP500-150-30-AA	5	1 1/2	3 1/2	3	1/2
VBP500-200-20-AA	VBP500-200-30-AA	5	2	3 1/2	3 1/4	1/2
VBP500-250-20-AA	VBP500-250-30-AA	5	2 1/2	3 1/2	3 1/4	1/2
VBP500-300-20-AA	VBP500-300-30-AA	5	3	3 3/4	3 3/4	5/8
VBP600-300-20-AA	VBP600-300-30-AA	6	3	4	3 3/4	5/8
VBP600-350-20-AA	VBP600-350-30-AA	6	3 1/2	4	3 3/4	5/8
VBP600-400-20-AA	VBP600-400-30-AA	6	4	4	3 3/4	5/8

© 2011, AFL, all rights reserved. PP-3-00517, Revision 3, 6.15.2023
Specifications are subject to change without notice.

DOSSERT®

TYPE CFTL-AA

Cable to Flat Bar Tee Connector

Tee tap is designed to provide terminal connections on side of a cable. Eight clamp bolts insure positive electrical contact. Pad conforms to NEMA standards.

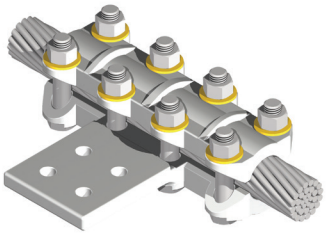

Material

Aluminum Alloy

Hardware

Yellow anodized aluminum bolts, nuts, and lockwashers.

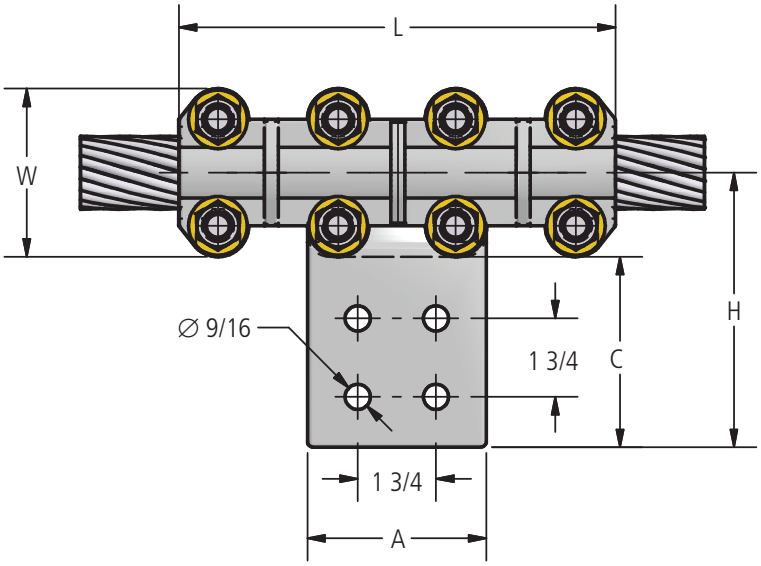

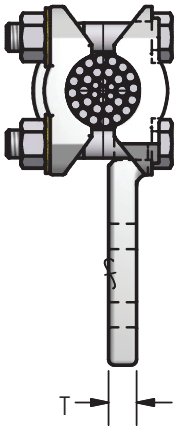

Ordering Information

CATALOG NUMBER	CABLE RANGE				DIMENSIONS IN INCHES						
	AAC		ACSR								
	MIN	MAX	MIN	MAX	A	C	H	L	T	W	BOLT SIZE
CFTL20A-4N-AA	250	336.4	4/0	203.2	3	3	4-1/2	6	3/8	2-15/32	1/2
CFTL34A-4N-AA	350	400	203.2	336.4	3	3	4-1/2	6	3/8	2-5/8	1/2
CFTL60-4N-AA	350	600	336.4	477	3	3	4-3/8	6-3/4	1/2	2-3/4	1/2
CFTL60-4N4-AA	350	600	336.4	477	4	4	5-3/8	6-3/4	1/2	2-3/4	1/2
CFTL64A-4N4-AA	700	900	605	666.6	4	4	5-5/8	8	1/2	2-3/4	1/2
CFTL135-4N4-AA	1192.5	1351.5	1033.5	1192.5	4	4	5-13/16	10	5/8	3-3/32	1/2
CFTL200-4N4-AA	1700	2000	1510.5	1590	4	4	6-1/8	10	5/8	3-3/4	5/8
CFTL250-4N4-AA	2000	2500	1780	2156	4	4	6-1/4	10	3/4	3-15/16	5/8
CFTL300-4N4-AA	2500	3000	2156	2870	4	4	6-5/16	10	3/4	4-1/8	5/8

© 2011, AFL, all rights reserved. PP-3-00281, Revision 1, 10.10.17
Specifications are subject to change without notice.

DOSSERT®

TYPE CASV-AA

Cable Spacer Clamp

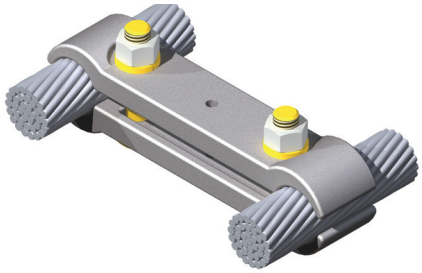

A high strength, high conductivity aluminum cable spacer, the CASV-AA includes clamping hardware made of high-tensile aluminum for dependability and durability in the field.

Material

Aluminum Alloy

Hardware

Yellow anodized aluminum nuts, bolts and lockwashers.

Notes

1. Different sizes not listed can be ordered by contacting customer service.

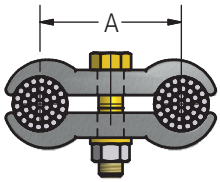

FIG. 1

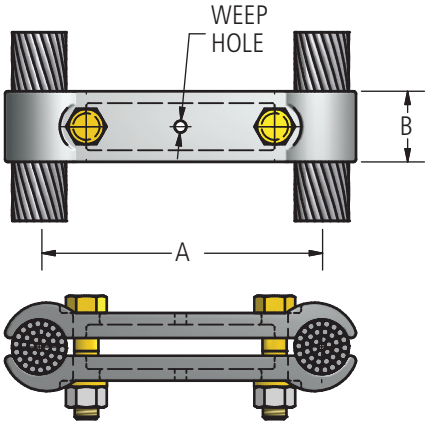

FIG. 2

Ordering Information

CATALOG NUMBER	ALUMINUM CABLE RANGE		ACSR CABLE RANGE		FIG. NO.	DIMENSIONS IN INCHES		BOLT SIZE
	MIN	MAX	MIN	MAX		A	B	
CASV40-8-AA	250 MCM	400 MCM	4/0	397.5	2	8	1 1/2	1/2
CASV60-3-AA	350 MCM	600 MCM	336.4 MCM	477 MCM	1	3	1 1/2	1/2
CASV60-4-AA	350 MCM	600 MCM	336.4 MCM	477 MCM	1	4	1 1/2	1/2
CASV60-6-AA	350 MCM	600 MCM	336.4 MCM	477 MCM	2	6	1 1/2	1/2
CASV60-8-AA	350 MCM	600 MCM	336.4 MCM	477 MCM	2	8	1 1/2	1/2
CASV60-12-AA	350 MCM	600 MCM	336.4 MCM	477 MCM	2	12	1 1/2	1/2
CASV60-13-AA	350 MCM	600 MCM	336.4 MCM	477 MCM	2	13	1 1/2	1/2
CASV60-14-AA	350 MCM	600 MCM	336.4 MCM	477 MCM	2	14	1 1/2	1/2
CASV60-16-AA	350 MCM	600 MCM	336.4 MCM	477 MCM	2	16	1 1/2	1/2
CASV60-18-AA	350 MCM	600 MCM	336.4 MCM	477 MCM	2	18	1 1/2	1/2
CASV90-3-AA	500 MCM	900 MCM	477 MCM	795 MCM	1	3	1 1/2	1/2
CASV90-4-AA	500 MCM	900 MCM	477 MCM	795 MCM	1	4	1 1/2	1/2
CASV90-6-AA	500 MCM	900 MCM	477 MCM	795 MCM	2	6	1 1/2	1/2
CASV90-8-AA	500 MCM	900 MCM	477 MCM	795 MCM	2	8	1 1/2	1/2
CASV90-9-1/2-AA	500 MCM	900 MCM	477 MCM	795 MCM	2	9 1/2	1 1/2	1/2
CASV90-12-AA	500 MCM	900 MCM	477 MCM	795 MCM	2	12	1 1/2	1/2
CASV90-14-AA	500 MCM	900 MCM	477 MCM	795 MCM	2	14	1 1/2	1/2
CASV90-16-AA	500 MCM	900 MCM	477 MCM	795 MCM	2	16	1 1/2	1/2
CASV90-18-AA	500 MCM	900 MCM	477 MCM	795 MCM	2	18	1 1/2	1/2

© 2011, AFL, all rights reserved. PP-3-00270, Revision 0, 1.12.11
Specifications are subject to change without notice.

DOSSERT®

TYPE CASV-AA

Cable Spacer Clamp

Ordering Information

CATALOG NUMBER	ALUMINUM CABLE RANGE		ACSR CABLE RANGE		FIG. NO.	DIMENSIONS IN INCHES		BOLT SIZE
	MIN	MAX	MIN	MAX		A	B	
CASV125-3-AA	900 MCM	1250 MCM	715.5 MCM	1113 MCM	1	3	1 1/2	1/2
CASV125-4-AA	900 MCM	1250 MCM	715.5 MCM	1113 MCM	1	4	1 1/2	1/2
CASV125-6-AA	900 MCM	1250 MCM	715.5 MCM	1113 MCM	2	6	1 1/2	1/2
CASV125-6-1/2-AA	900 MCM	1250 MCM	715.5 MCM	1113 MCM	2	6 1/2	1 1/2	1/2
CASV125-8-AA	900 MCM	1250 MCM	715.5 MCM	1113 MCM	2	8	1 1/2	1/2
CASV125-12-AA	900 MCM	1250 MCM	715.5 MCM	1113 MCM	2	12	1 1/2	1/2
CASV125-13-AA	900 MCM	1250 MCM	715.5 MCM	1113 MCM	2	13	1 1/2	1/2
CASV125-14-AA	900 MCM	1250 MCM	715.5 MCM	1113 MCM	2	14	1 1/2	1/2
CASV125-16-AA	900 MCM	1250 MCM	715.5 MCM	1113 MCM	2	16	1 1/2	1/2
CASV125-18-AA	900 MCM	1250 MCM	715.5 MCM	1113 MCM	2	18	2 1/8	5/8
CASV160-3-AA	1250 MCM	1600 MCM	1113 MCM	1431 MCM	1	3	2 1/8	5/8
CASV160-4-AA	1250 MCM	1600 MCM	1113 MCM	1431 MCM	1	4	2 1/8	5/8
CASV160-6-AA	1250 MCM	1600 MCM	1113 MCM	1431 MCM	2	6	2 1/8	5/8
CASV160-8-AA	1250 MCM	1600 MCM	1113 MCM	1431 MCM	2	8	2 1/8	5/8
CASV160-12-AA	1250 MCM	1600 MCM	1113 MCM	1431 MCM	2	12	2 1/8	5/8
CASV160-14-AA	1250 MCM	1600 MCM	1113 MCM	1431 MCM	2	14	2 1/8	5/8
CASV160-16-AA	1250 MCM	1600 MCM	1113 MCM	1431 MCM	2	16	2 1/8	5/8
CASV160-18-AA	1250 MCM	1600 MCM	1113 MCM	1431 MCM	2	18	2 1/8	5/8
CASV200-3-AA	1500 MCM	2000 MCM	1272 MCM	1780 MCM	1	3	2 1/8	5/8
CASV200-4-AA	1500 MCM	2000 MCM	1272 MCM	1780 MCM	2	4	2 1/8	5/8
CASV200-5-AA	1500 MCM	2000 MCM	1272 MCM	1780 MCM	2	5	2 1/8	5/8
CASV200-6-AA	1500 MCM	2000 MCM	1272 MCM	1780 MCM	2	6	2 1/8	5/8
CASV200-8-AA	1500 MCM	2000 MCM	1272 MCM	1780 MCM	2	8	2 1/8	5/8
CASV200-12-AA	1500 MCM	2000 MCM	1272 MCM	1780 MCM	2	12	2 1/8	5/8
CASV200-14-AA	1500 MCM	2000 MCM	1272 MCM	1780 MCM	2	14	2 1/8	5/8
CASV200-15-AA	1500 MCM	2000 MCM	1272 MCM	1780 MCM	2	15	2 1/8	5/8
CASV200-16-AA	1500 MCM	2000 MCM	1272 MCM	1780 MCM	2	16	2 1/8	5/8
CASV200-18-AA	1500 MCM	2000 MCM	1272 MCM	1780 MCM	2	18	2 1/8	5/8
CASV250-3-AA	2000 MCM	2500 MCM	1780 MCM	2312 MCM	1	3	2 1/8	5/8
CASV250-4-AA	2000 MCM	2500 MCM	1780 MCM	2312 MCM	1	4	2 1/8	5/8
CASV250-6-AA	2000 MCM	2500 MCM	1780 MCM	2312 MCM	2	6	2 1/8	5/8
CASV250-8-AA	2000 MCM	2500 MCM	1780 MCM	2312 MCM	2	8	2 1/8	5/8
CASV250-12-AA	2000 MCM	2500 MCM	1780 MCM	2312 MCM	2	12	2 1/8	5/8
CASV250-14-AA	2000 MCM	2500 MCM	1780 MCM	2312 MCM	2	14	2 1/8	5/8
CASV250-16-AA	2000 MCM	2500 MCM	1780 MCM	2312 MCM	2	16	2 1/8	5/8
CASV250-18-AA	2000 MCM	2500 MCM	1780 MCM	2312 MCM	2	18	2 1/8	5/8
CASV300-8-AA	2500 MCM	3000 MCM	2300 MCM	2870 MCM	2	8	2 1/8	5/8
CASV300-12-AA	2500 MCM	3000 MCM	2300 MCM	2870 MCM	2	12	2 1/8	5/8
CASV300-14-AA	2500 MCM	3000 MCM	2300 MCM	2870 MCM	2	14	2 1/8	5/8

© 2011, AFL, all rights reserved. PP-3-00270, Revision 0, 1.12.11
Specifications are subject to change without notice.

DOSSERT®

TYPE CASV-N-AA, CASV-N-90-AA

Cable Spacer Clamp with Terminal Pad

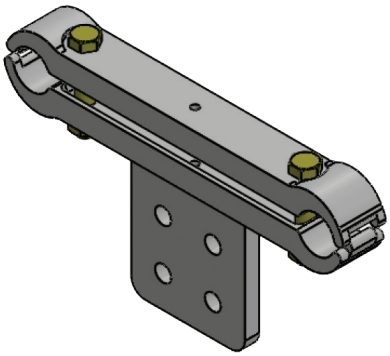

CASV-N-AA

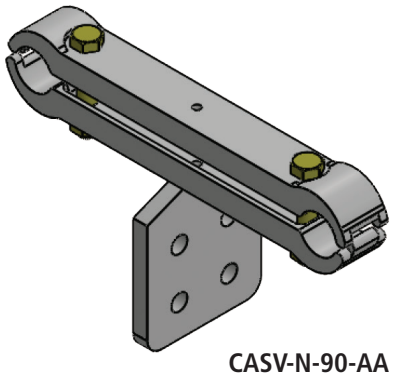

CASV-N-90-AA

Material

Aluminum Alloy

Hardware

Yellow anodized aluminum nuts, bolts and lockwashers.

Notes

For a 90° angle, add -90 Ex: CASV125-6-4N4-90-AA

CASV-N-AA CASV-N-90-AA

FIG. 1

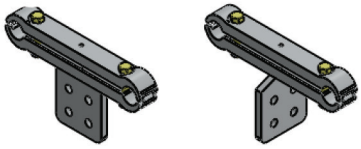

CASV-N-AA CASV-N-90-AA

FIG. 2

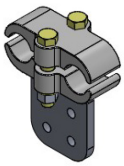

CASV-N-AA

FIG. 3

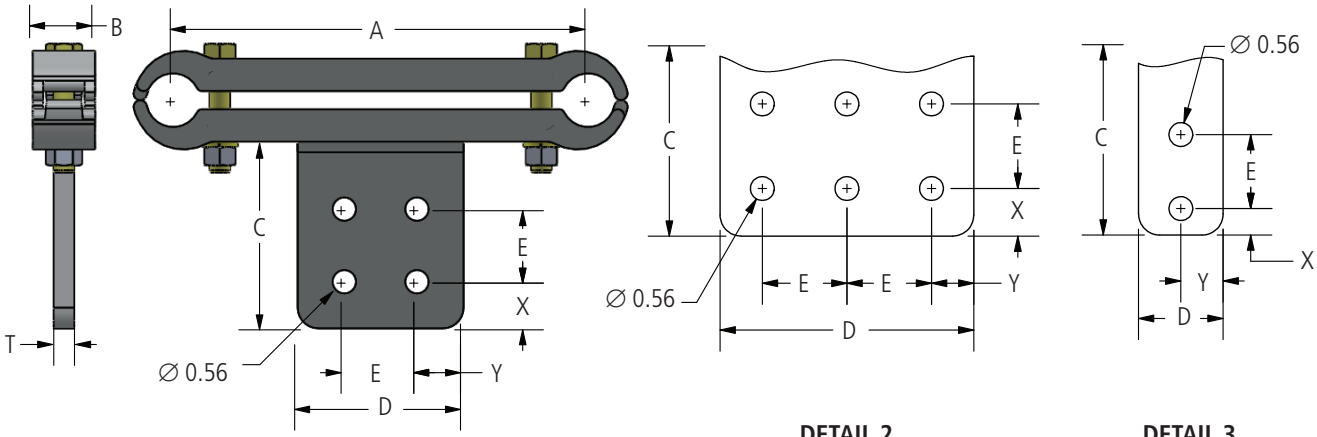

DETAIL 1 DETAIL 2 DETAIL 3

continued

© 2011, AFL, all rights reserved. PP-3-00272, Revision 11, 10.17.2022
Specifications are subject to change without notice.

DOSSERT®

TYPE CASV-N-AA, CASV-N-90-AA

Cable Spacer Clamp with Terminal Pad

Ordering Information

CATALOG NUMBER		CABLE RANGE				FIG. NO.	PAD DETAIL	DIMENSIONS IN INCHES								BOLT SIZE
		AAC		ACSR												
CASV-N-AA	CASV-N-90-AA	MIN	MAX	MIN	MAX			A	B	C	D	E	T	X	Y	
CASV40-8-4N-AA	CASV40-8-4N-90-AA	250 MCM	400 MCM	4/0	397.5	2	1	8.00	1.50	4.25	3.00	1.75	0.50	0.63	0.63	1/2
CASV60-4-2N-AA	CASV60-4-2N-90-AA	350 MCM	600 MCM	336.4 MCM	477 MCM	1	3	4.00	1.50	4.25	2.00	1.75	0.50	0.63	1.00	1/2
CASV60-4-4N-AA	CASV60-4-4N-90-AA	350 MCM	600 MCM	336.4 MCM	477 MCM	1	1	4.00	1.50	4.25	3.00	1.75	0.50	0.63	0.63	1/2
CASV60-4-4N4-AA	CASV60-4-4N4-90-AA	350 MCM	600 MCM	336.4 MCM	477 MCM	1	1	4.00	1.50	4.63	4.00	1.75	0.50	1.13	1.13	1/2
CASV60-8-4N-AA	CASV60-8-4N-90-AA	350 MCM	600 MCM	336.4 MCM	477 MCM	2	1	8.00	1.50	4.25	3.00	1.75	0.50	1.13	1.13	1/2
CASV60-8-4N4-AA	CASV60-8-4N4-90-AA	350 MCM	600 MCM	336.4 MCM	477 MCM	2	1	8.00	1.50	5.25	4.00	1.75	0.50	1.13	1.13	1/2
CASV60-10-4N-AA	CASV60-10-4N-90-AA	350 MCM	600 MCM	336.4 MCM	477 MCM	2	1	10.00	1.50	3.50	3.00	1.75	0.50	0.63	0.63	1/2
CASV90-4-4N-AA	CASV90-4-4N-90-AA	500 MCM	900 MCM	477 MCM	795 MCM	1	1	4.00	1.50	4.25	3.00	1.75	0.50	0.63	0.63	1/2
CASV90-4-4N4-AA	CASV90-4-4N4-90-AA	500 MCM	900 MCM	477 MCM	795 MCM	1	1	4.00	1.50	4.25	4.00	1.75	0.50	1.13	1.13	1/2
CASV90-6-4N-AA	CASV90-6-4N-90-AA	500 MCM	900 MCM	477 MCM	795 MCM	2	1	6.00	1.50	4.25	3.00	1.75	0.50	0.63	0.63	1/2
CASV90-6-4N4-AA	CASV90-6-4N4-90-AA	500 MCM	900 MCM	477 MCM	795 MCM	2	1	6.00	1.50	4.25	4.00	1.75	0.50	1.13	1.13	1/2
CASV90-8-4N-AA	CASV90-8-4N-90-AA	500 MCM	900 MCM	477 MCM	795 MCM	2	1	8.00	1.50	3.50	3.00	1.75	0.50	0.63	0.63	1/2
CASV90-8-4N4-AA	CASV90-8-4N4-90-AA	500 MCM	900 MCM	477 MCM	795 MCM	2	1	8.00	1.50	4.50	4.00	1.75	0.50	1.13	1.13	1/2
CASV90-12-4N-AA	CASV90-12-4N-90-AA	500 MCM	900 MCM	477 MCM	795 MCM	2	1	12.00	1.50	3.50	3.00	1.75	0.50	0.63	0.63	1/2
CASV90-12-4N4-AA	CASV90-12-4N4-90-AA	500 MCM	900 MCM	477 MCM	795 MCM	2	1	12.00	1.50	4.50	4.00	1.75	0.50	1.13	1.13	1/2
CASV90-18-4N-AA	CASV90-18-4N-90-AA	500 MCM	900 MCM	477 MCM	795 MCM	2	1	18.00	1.50	3.50	3.00	1.75	0.50	0.63	0.63	1/2
CASV90-18-4N4-AA	CASV90-18-4N4-90-AA	500 MCM	900 MCM	477 MCM	795 MCM	2	1	18.00	1.50	4.50	4.00	1.75	0.50	1.13	1.13	1/2
CASV125-4-2N-AA	CASV125-4-2N-90-AA	900 MCM	1250 MCM	715.5 MCM	1113 MCM	1	3	4.00	1.50	4.25	2.00	1.75	0.50	0.63	1.00	1/2
CASV125-4-4N4-AA	CASV125-4-4N4-90-AA	900 MCM	1250 MCM	715.5 MCM	1113 MCM	1	1	4.00	1.50	4.50	4.00	1.75	0.50	1.13	1.13	1/2
CASV125-6-4N4-AA	CASV125-6-4N4-90-AA	900 MCM	1250 MCM	715.5 MCM	1113 MCM	2	1	6.00	1.50	4.25	4.00	1.75	0.50	1.13	1.13	1/2
CASV125-8-4N4-AA	CASV125-8-4N4-90-AA	900 MCM	1250 MCM	715.5 MCM	1113 MCM	2	1	8.00	1.50	4.50	4.00	1.75	0.50	1.13	1.13	1/2
CASV125-12-4N-AA	CASV125-12-4N-90-AA	900 MCM	1250 MCM	715.5 MCM	1113 MCM	2	1	12.00	1.50	3.44	3.00	1.75	0.50	0.63	0.63	1/2
CASV125-12-4N4-AA	CASV125-12-4N4-90-AA	900 MCM	1250 MCM	715.5 MCM	1113 MCM	2	1	12.00	1.50	4.50	4.00	1.75	0.50	1.13	1.13	1/2
CASV125-18-4N4-AA	CASV125-18-4N4-90-AA	900 MCM	1250 MCM	715.5 MCM	1113 MCM	2	1	18.00	1.50	4.50	4.00	1.75	0.50	1.13	1.13	1/2
CASV160-4-2N-AA	CASV160-4-2N-90-AA	1250 MCM	1600 MCM	1113 MCM	1431 MCM	1	3	4.00	2.13	4.25	2.00	1.75	0.50	0.63	1.00	5/8
CASV160-4-4N-AA	CASV160-4-4N-90-AA	1250 MCM	1600 MCM	1113 MCM	1431 MCM	1	1	4.00	2.13	4.25	3.00	1.75	0.50	0.63	0.63	5/8
CASV160-4-4N4-AA	CASV160-4-4N4-90-AA	1250 MCM	1600 MCM	1113 MCM	1431 MCM	1	1	4.00	2.13	4.50	4.00	1.75	0.50	1.13	1.13	5/8
CASV160-6-4N-AA	CASV160-6-4N-90-AA	1250 MCM	1600 MCM	1113 MCM	1431 MCM	2	1	6.00	2.13	4.25	3.00	1.75	0.50	0.63	0.63	5/8
CASV160-6-4N4-AA	CASV160-6-4N4-90-AA	1250 MCM	1600 MCM	1113 MCM	1431 MCM	2	1	6.00	2.13	5.25	4.00	1.75	0.50	1.13	1.13	5/8
CASV160-8-4N4-AA	CASV160-8-4N4-90-AA	1250 MCM	1600 MCM	1113 MCM	1431 MCM	2	1	8.00	2.13	5.25	4.00	1.75	0.50	1.13	1.13	5/8
CASV160-12-4N4-AA	CASV160-12-4N4-90-AA	1250 MCM	1600 MCM	1113 MCM	1431 MCM	2	1	12.00	2.13	4.50	4.00	1.75	0.50	1.13	1.13	5/8
CASV160-18-4N4-AA	CASV160-18-4N4-90-AA	1250 MCM	1600 MCM	1113 MCM	1431 MCM	2	1	18.00	2.13	4.50	4.00	1.75	0.50	1.13	1.13	5/8
CASV200-4-2N-AA	CASV200-4-2N-90-AA	1500 MCM	2000 MCM	1272 MCM	1780 MCM	2	3	4.00	2.13	4.25	2.00	1.75	0.50	0.63	1.00	5/8
CASV200-4-4N-AA*	CASV200-4-4N-90-AA	1500 MCM	2000 MCM	1272 MCM	1780 MCM	1	1	4.00	2.13	3.50	3.00	1.75	0.50	0.63	0.63	5/8
CASV200-4-4N4-AA*	CASV200-4-4N4-90-AA	1500 MCM	2000 MCM	1272 MCM	1780 MCM	1	1	4.00	2.13	4.50	4.00	1.75	0.50	1.13	1.13	5/8
CASV200-5-4N4-AA	CASV200-5-4N4-90-AA	1500 MCM	2000 MCM	1272 MCM	1780 MCM	2	1	5.00	2.13	5.25	4.00	1.75	0.50	1.13	1.13	5/8
CASV200-6-4N-AA	CASV200-6-4N-90-AA	1500 MCM	2000 MCM	1272 MCM	1780 MCM	2	1	6.00	2.13	4.25	3.00	1.75	0.50	0.63	0.63	5/8
CASV200-6-4N4-AA	CASV200-6-4N4-90-AA	1500 MCM	2000 MCM	1272 MCM	1780 MCM	2	1	6.00	2.13	4.50	4.00	1.75	0.50	1.13	1.13	5/8
CASV200-8-4N-AA	CASV200-8-4N-90-AA	1500 MCM	2000 MCM	1272 MCM	1780 MCM	2	1	8.00	2.13	4.50	3.00	1.75	0.50	0.63	0.63	5/8
CASV200-8-4N4-AA	CASV200-8-4N4-90-AA	1500 MCM	2000 MCM	1272 MCM	1780 MCM	2	1	8.00	2.13	4.50	4.00	1.75	0.50	1.13	1.13	5/8
CASV200-12-4N4-AA	CASV200-12-4N4-90-AA	1500 MCM	2000 MCM	1272 MCM	1780 MCM	2	1	12.00	2.13	4.50	4.00	1.75	0.50	1.13	1.13	5/8
CASV200-16-4N4-AA	CASV200-16-4N4-90-AA	1500 MCM	2000 MCM	1272 MCM	1780 MCM	2	1	16.00	2.13	4.50	4.00	1.75	0.50	1.13	1.13	5/8
CASV200-18-4N4-AA	CASV200-18-4N4-90-AA	1500 MCM	2000 MCM	1272 MCM	1780 MCM	2	1	18.00	2.13	4.50	4.00	1.75	0.50	1.13	1.13	5/8
CASV250-4-2N-AA	CASV250-4-2N-90-AA	2000 MCM	2500 MCM	1780 MCM	2312 MCM	1	3	4.00	2.13	4.25	2.00	1.75	0.50	0.63	1.00	5/8
CASV250-4-4N4-AA	CASV250-4-4N4-90-AA	2000 MCM	2500 MCM	1780 MCM	2312 MCM	1	1	4.00	2.13	5.25	4.00	1.75	0.50	1.13	1.13	5/8
CASV250-8-4N-AA	CASV250-8-4N-90-AA	2000 MCM	2500 MCM	1780 MCM	2312 MCM	2	1	8.00	2.13	4.25	3.00	1.75	0.50	0.63	0.63	5/8
CASV250-8-4N4-AA	CASV250-8-4N4-90-AA	2000 MCM	2500 MCM	1780 MCM	2312 MCM	2	1	8.00	2.13	4.50	4.00	1.75	0.50	1.13	1.13	5/8
CASV250-18-4N4-AA	CASV250-18-4N4-90-AA	2000 MCM	2500 MCM	1780 MCM	2312 MCM	2	1	18.00	2.13	4.50	4.00	1.75	0.50	1.13	1.13	5/8
CASV300-8-4N4-AA	CASV300-8-4N4-90-AA	2500 MCM	3000 MCM	2300 MCM	2870 MCM	2	1	8.00	2.13	5.25	4.00	1.75	0.50	1.13	1.13	5/8

* Denotes this item references Figure 3

© 2011, AFL, all rights reserved. PP-3-00272, Revision 11, 10.17.2022
Specifications are subject to change without notice.

DOSSERT®

TYPE CFTV-N-AA

Terminal Lug

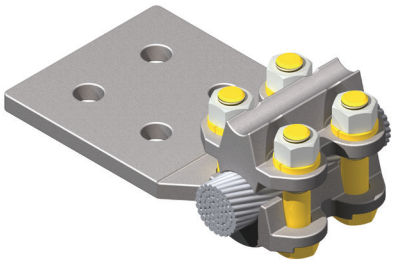

Tee connector designed to connect aluminum cables to aluminum pad for flat bolt on connection. Pads conform to NEMA standards.

Material

Aluminum Alloy

Hardware

Yellow anodized aluminum nuts, bolts and lockwashers.

Notes

1. For Stainless Steel bolts, lockwashers and Everdur nuts, add "-SSHBN" to catalog number. EX: CTFV160-4N-NN-SSHBN
2. For Grade Five Galvanized Steel Hardware, add "-GS5" to catalog number. EX: CFTV160-4N-AA-GS5

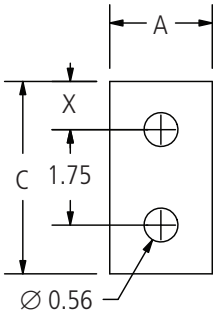

FIG. 2

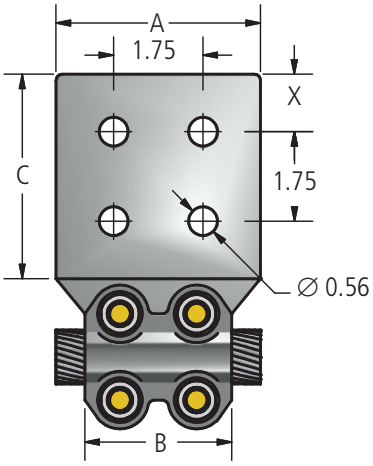

FIG. 1

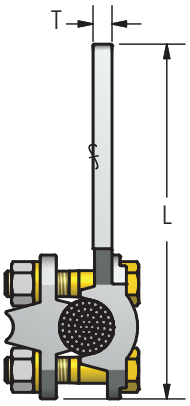

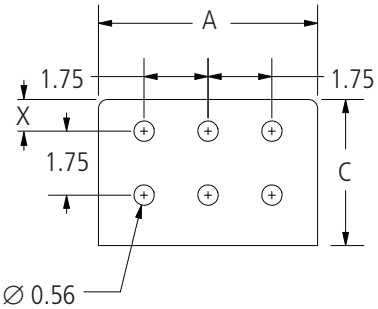

FIG. 3

Ordering Information

CATALOG NUMBER	CABLE RANGE				FIG. NO.	DIMENSIONS IN INCHES						BOLT SIZE
	ALUMINUM		ACSR									
	MIN	MAX	MIN	MAX		A	B	C	L	T	X	
CFTV25-2N-AA	1/0 STR.	250 MCM	1/0	4/0	2	2.00	3.00	3.00	5.63	0.31	0.63	1/2
CFTV25-3N-AA	1/0 STR.	250 MCM	1/0	4/0	1	3.00	3.00	3.00	5.56	0.31	0.63	1/2
CFTV25-4N-AA	1/0 STR.	250 MCM	1/0	4/0	1	4.00	3.00	3.00	5.56	0.31	0.63	1/2
CFTV25-4N4-AA	1/0 STR.	250 MCM	1/0	4/0	1	4.00	3.00	4.00	6.56	0.31	1.13	1/2
CFTV40-2N-AA	250 MCM	400 MCM	4/0	397.5	2	2.00	3.00	3.00	5.63	0.38	0.63	1/2
CFTV40-3N-AA	250 MCM	400 MCM	4/0	397.5	1	3.00	3.00	3.00	5.75	0.38	0.63	1/2
CFTV40-4N-AA	250 MCM	400 MCM	4/0	397.5	1	3.00	3.00	3.00	5.75	0.38	0.63	1/2
CFTV40-4N4-AA	250 MCM	400 MCM	4/0	397.5	1	4.00	3.00	4.00	6.75	0.38	1.13	1/2
CFTV60-2N-AA	350 MCM	600 MCM	336.4	477	2	2.00	3.00	3.00	5.94	0.38	0.63	1/2
CFTV60-3N-AA	350 MCM	600 MCM	336.4	477	1	3.00	3.00	3.00	5.94	0.38	0.63	1/2
CFTV60-4N-AA	350 MCM	600 MCM	336.4	477	1	4.00	3.00	3.00	5.94	0.38	0.63	1/2
CFTV60-4N4-AA	350 MCM	600 MCM	336.4	477	1	4.00	3.00	4.00	6.94	0.38	1.13	1/2
CFTV60-6N4-AA	350 MCM	600 MCM	336.4	477	3	6.00	3.00	4.00	6.94	0.38	1.13	1/2
CFTV90-2N-AA	500 MCM	900 MCM	477	795	2	2.00	3.00	3.00	6.13	0.50	0.63	1/2
CFTV90-3N-AA	500 MCM	900 MCM	477	795	1	3.00	3.00	3.00	6.13	0.50	0.63	1/2
CFTV90-4N-AA	500 MCM	900 MCM	477	795	1	4.00	3.00	3.00	6.63	0.50	0.63	1/2
CFTV90-4N4-AA	500 MCM	900 MCM	477	795	1	4.00	3.00	4.00	7.13	0.50	1.13	1/2
CFTV125-2N-AA	900 MCM	1250 MCM	715	1113	2	2.00	3.25	3.00	6.31	0.50	0.63	1/2
CFTV125-3N-AA	900 MCM	1250 MCM	715	1113	1	3.00	3.25	3.00	6.31	0.50	0.63	1/2

© 2011, AFL, all rights reserved. PP-3-00284, Revision 4, 11.30.18
Specifications are subject to change without notice.

DOSSERT®

TYPE CFTV-N-AA

Terminal Lug

Ordering Information

CATALOG NUMBER	CABLE RANGE				FIG. NO.	DIMENSIONS IN INCHES						BOLT SIZE
	ALUMINUM		ACSR									
	MIN	MAX	MIN	MAX		A	B	C	L	T	X	
CFTV125-4N-AA	900 MCM	1250 MCM	715	1113	1	3.00	3.25	3.00	6.31	0.50	0.63	1/2
CFTV125-4N4-AA	900 MCM	1250 MCM	715	1113	1	4.00	3.25	4.00	7.31	0.50	1.13	1/2
CFTV125-6N4-AA	900 MCM	1250 MCM	715	1113	3	6.00	3.25	4.00	7.31	0.50	1.13	1/2
CFTV160-3N-AA	1250 MCM	1600 MCM	1113	1431	1	3.00	4.38	3.00	6.88	0.56	0.63	5/8
CFTV160-4N-AA	1250 MCM	1600 MCM	1113	1431	1	4.00	4.38	3.00	6.88	0.56	0.63	5/8
CFTV160-4N4-AA	1250 MCM	1600 MCM	1113	1431	1	4.00	4.38	4.00	7.88	0.56	1.13	5/8
CFTV160-6N4-AA	1250 MCM	1600 MCM	1113	1431	3	6.00	4.38	4.00	7.88	0.56	1.13	5/8
CFTV200-2N-AA	1500 MCM	2000 MCM	1272	1780	2	2.00	4.50	3.00	7.00	0.69	0.63	5/8
CFTV200-3N-AA	1500 MCM	2000 MCM	1272	1780	1	3.00	4.50	3.00	7.00	0.69	0.63	5/8
CFTV200-4N-AA	1500 MCM	2000 MCM	1272	1780	1	4.00	4.50	3.00	7.00	0.69	0.63	5/8
CFTV200-4N4-AA	1500 MCM	2000 MCM	1272	1780	1	4.00	4.50	4.00	8.00	0.69	1.13	5/8
CFTV200-6N4-AA	1500 MCM	2000 MCM	1272	1780	3	6.00	4.50	4.00	8.00	0.69	1.13	5/8
CFTV250-2N-AA	2000 MCM	2500 MCM	1780	2300	2	2.00	4.50	3.00	7.19	0.75	0.63	5/8
CFTV250-3N-AA	2000 MCM	2500 MCM	1780	2300	1	3.00	4.50	3.00	7.00	0.69	0.63	5/8
CFTV250-4N-AA	2000 MCM	2500 MCM	1780	2300	1	4.00	4.50	3.00	7.38	0.75	0.63	5/8
CFTV250-4N4-AA	2000 MCM	2500 MCM	1780	2300	1	4.00	4.50	4.00	8.38	0.75	1.13	5/8
CFTV250-6N4-AA	2000 MCM	2500 MCM	1780	2300	3	6.00	4.50	4.00	8.38	0.75	1.13	5/8
CFTV300-4N-AA	2500 MCM	3000 MCM	2300	2870	1	4.00	4.50	3.00	7.56	0.75	0.63	5/8
CFTV300-4N4-AA	2500 MCM	3000 MCM	2300	2870	1	4.00	4.50	4.00	8.56	0.75	1.13	5/8

© 2011, AFL, all rights reserved. PP-3-00284, Revision 4, 11.30.18
Specifications are subject to change without notice.

230 kV Aluminum Bolted Terminal Connectors

DOSSERT®

TYPE T3CV-AA

Aluminum Terminal

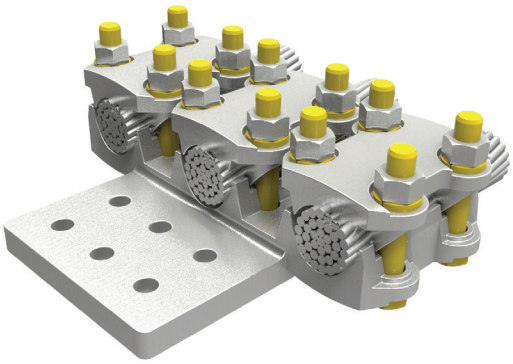

Material

Aluminum Alloy

Material

Aluminum nuts, bolts and lockwashers.

Notes

- For Stainless Steel Hardware, add "-SS" to catalog number. EX: T3CV125-4N4-AA-SS
- For Stainless Steel bolts, lockwashers and Everdur nuts, add "-SSHBN" to catalog number. EX: T3CV125-4N4-AA-SSHBN
- For Galvanized Steel Hardware, add "-GS" to catalog number. EX: T3CV125-4N4-AA-GS
- For Angled Pad, add "A" to prefix and angle to catalog number. EX: T3CVA125-4N4-45-AA

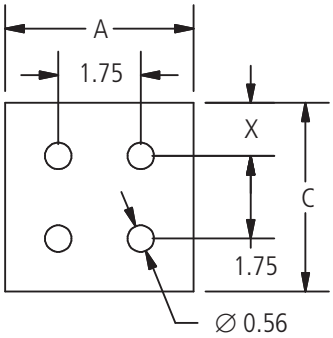

FIG. 1

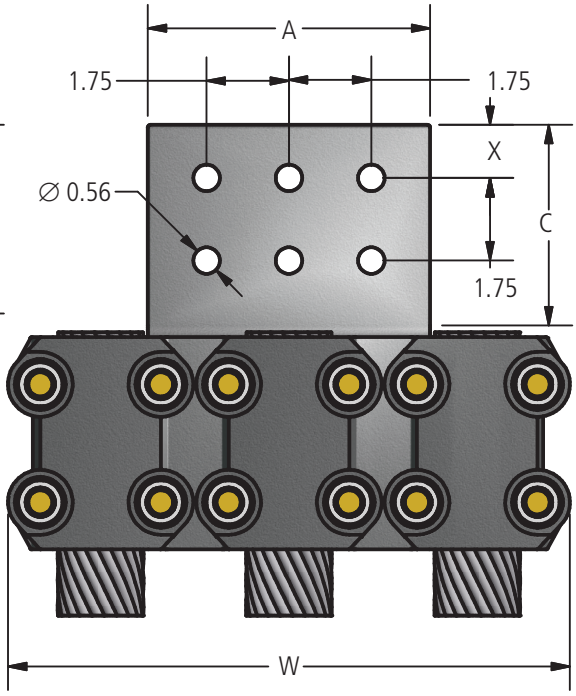

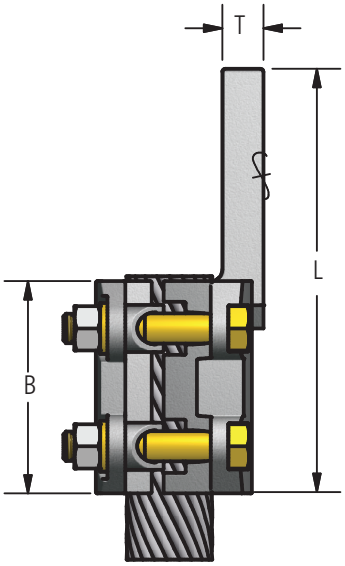

FIG. 2

© 2013, AFL, all rights reserved. PP-3-00468, Revision 2, 3.29.2023
Specifications are subject to change without notice.

DOSSERT®

TYPE T3CV-AA

Aluminum Terminal

Ordering Information

CATALOG NUMBER	CABLE RANGE				FIG. NO.	DIMENSIONS IN INCHES							BOLT SIZE
	ALUMINUM		ACSR										
	MIN	MAX	MIN	MAX		A	B	C	L	T	W	X	
T3CV25-4N-AA	# 1/0	250	# 1/0	#4/0	1	3.00	3.00	3.00	6.25	0.31	7.19	0.63	1/2
T3CV25-4N4-AA	# 1/0	250	# 1/0	#4/0	1	4.00	3.00	4.00	7.25	0.31	7.19	1.13	1/2
T3CV40-4N-AA	250	400	#4/0	397.5	1	3.00	3.00	3.00	6.25	0.38	7.75	0.63	1/2
T3CV40-4N4-AA	250	400	#4/0	397.5	1	4.00	3.00	4.00	7.25	0.38	7.75	1.13	1/2
T3CV60-4N-AA	350	600	336.4	477	1	3.00	3.00	3.00	6.25	0.38	8.63	0.63	1/2
T3CV60-4N4-AA	350	600	336.4	477	1	4.00	3.00	4.00	7.25	0.38	8.63	1.13	1/2
T3CV90-4N-AA	500	900	477	795	1	3.00	3.00	3.00	6.25	0.50	8.88	0.63	1/2
T3CV90-4N4-AA	500	900	477	795	1	4.00	3.00	4.00	7.25	0.75	8.88	1.13	1/2
T3CV90-5N4-AA	500	900	477	795	2	5.00	3.00	4.00	7.25	0.63	8.88	1.13	1/2
T3CV90-6N4-AA	500	900	477	795	2	6.00	3.00	4.00	7.25	0.50	8.88	1.13	1/2
T3CV125-4N-AA	900	1250	715	1113	1	3.00	3.25	3.00	6.50	0.63	9.44	0.63	1/2
T3CV125-4N4-AA	900	1250	715	1113	1	4.00	3.25	4.00	7.50	0.63	9.88	1.13	1/2
T3CV160-4N-AA	1250	1600	1113	1431	1	3.00	4.38	3.00	7.63	0.75	11.13	0.63	5/8
T3CV160-4N4-AA	1250	1600	1113	1431	1	4.00	4.38	4.00	8.75	0.75	11.13	1.13	5/8
T3CV160-6N4-AA	1250	1600	1113	1431	2	6.00	4.38	4.00	8.75	0.75	11.13	1.13	5/8
T3CV200-4N-AA	1500	2000	1272	1780	1	3.00	4.50	3.00	7.75	0.88	11.88	0.63	5/8
T3CV200-4N4-AA	1500	2000	1272	1780	1	4.00	4.50	4.00	8.75	0.88	12.25	1.13	5/8
T3CV200-6N4-AA	1500	2000	1272	1780	2	6.00	4.50	4.00	8.75	0.88	11.88	1.13	5/8
T3CV250-4N-AA	2000	2500	1780	2300	1	3.00	4.50	3.00	7.75	0.88	11.94	0.63	5/8
T3CV250-4N4-AA	2000	2500	1780	2300	1	4.00	4.50	4.00	8.75	0.88	12.06	1.13	5/8
T3CV250-6-4N4-AA	2000	2500	1780	2300	1	4.00	4.50	4.00	8.75	0.88	15.94	1.13	5/8
T3CV250-6N4-AA	2000	2500	1780	2300	2	6.00	4.50	4.00	8.75	0.88	12.06	1.13	5/8

© 2013, AFL, all rights reserved. PP-3-00468, Revision 2, 3.29.2023
Specifications are subject to change without notice.

DOSSERT®

TYPE T2CV-N-AA, T2CVA-N-30-AA, T2CVA-N-45-AA, T2CVA-N-90-AA

Aluminum Terminal for 2 Cables

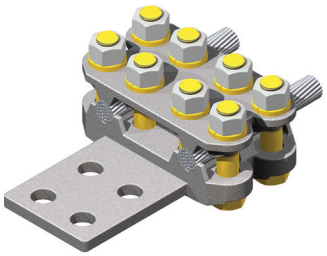

Terminal is designed to connect stranded aluminum or ACSR conductors to aluminum pads. Pad conforms to NEMA standards. Terminals are designed with a universal groove to accept a wide range of conductor sizes. Captive bolts permit one wrench tightening of nuts.

Material

Aluminum Alloy

Material

Yellow anodized aluminum nuts, bolts and lockwashers.

Notes

- For a 30°, add suffix '-30'; 45°, add suffix '-45'; and 90°, add suffix '-90' to catalog number. Also add 'A' after T2CV. EX: T2CVA25-4N4-90-AA
- For Stainless Steel bolts, lockwashers and Everdur nuts, add "-SSHBN" to catalog number. EX: T2CV200-4N4-AA-SSHBN
- For Galvanized Steel Hardware, add "-GS" to catalog number. EX: T2CV200-4N4-AA-GS
- For Angled Pad, add "A" to prefix and angle to catalog number. EX: T2CVA200-4N4-45-AA

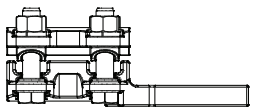

T2CV-N-AA

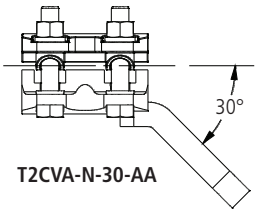

T2CVA-N-30-AA

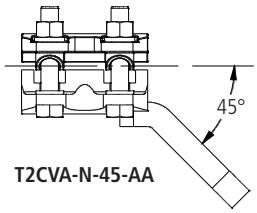

T2CVA-N-45-AA

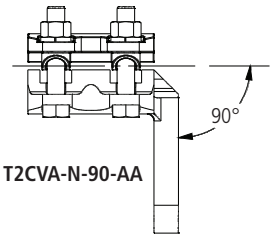

T2CVA-N-90-AA

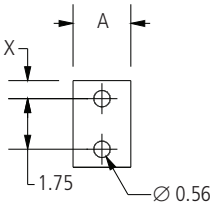

FIG. 1

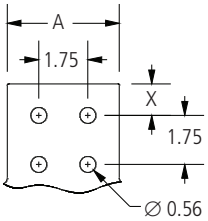

FIG. 2

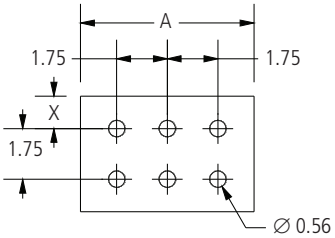

FIG. 3

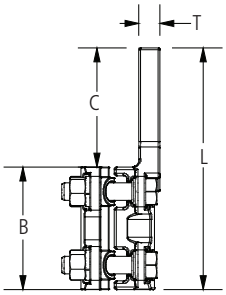

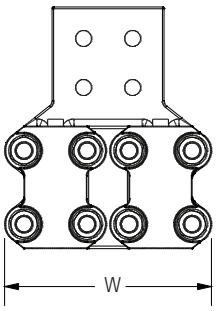

DETAIL A

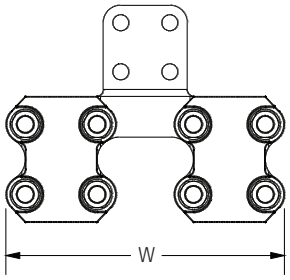

DETAIL B

© 2011, AFL, all rights reserved. PP-3-00470, Revision 3, 6.11.18
Specifications are subject to change without notice.

DOSSERT®

TYPE T2CV-N-AA, T2CVA-N-30-AA, T2CVA-N-45-AA, T2CVA-N-90-AA

Aluminum Terminal for 2 Cables

Ordering Information

CATALOG NO.	CABLE RANGE				FIG. NO.	DETAIL	DIMENSIONS IN INCHES							BOLT SIZE
	AAC		ACSR											
	MIN	MAX	MIN	MAX			A	B	C	L	T	W	X	
T2CV25-4N-AA	# 1/0	250	# 1/0	# 4/0	2	A	3	3	3	6 1/4	5/16	4 3/4	5/8	1/2
T2CVA25-4N-30-AA	# 1/0	250	# 1/0	# 4/0	2	A	3	3	3	6 1/4	5/16	4 3/4	5/8	1/2
T2CVA25-4N-45-AA	# 1/0	250	# 1/0	# 4/0	2	A	3	3	3	6 1/4	5/16	4 3/4	5/8	1/2
T2CVA25-4N-90-AA	# 1/0	250	# 1/0	# 4/0	2	A	3	3	3	6 1/4	5/16	4 3/4	5/8	1/2
T2CV25-4N4-AA	# 1/0	250	# 1/0	# 4/0	2	A	4	3	4	7 1/4	5/16	4 3/4	1 1/8	1/2
T2CVA25-4N4-30-AA	# 1/0	250	# 1/0	# 4/0	2	A	4	3	4	7 1/4	5/16	4 3/4	1 1/8	1/2
T2CVA25-4N4-45-AA	# 1/0	250	# 1/0	# 4/0	2	A	4	3	4	7 1/4	5/16	4 3/4	1 1/8	1/2
T2CVA25-4N4-90-AA	# 1/0	250	# 1/0	# 4/0	2	A	4	3	4	7 1/4	5/16	4 3/4	1 1/8	1/2
T2CV40-4N-AA	250	400	# 4/0	397.5	2	A	3	3	3	6 1/4	7/16	5 1/16	5/8	1/2
T2CVA40-4N-30-AA	250	400	# 4/0	397.5	2	A	3	3	3	6 1/4	7/16	5 1/16	5/8	1/2
T2CVA40-4N-45-AA	250	400	# 4/0	397.5	2	A	3	3	3	6 1/4	7/16	5 1/16	5/8	1/2
T2CVA40-4N-90-AA	250	400	# 4/0	397.5	2	A	3	3	3	6 1/4	7/16	5 1/16	5/8	1/2
T2CV40-4N4-AA	250	400	# 4/0	397.5	2	A	4	3	4	7 1/4	3/8	5 1/16	1 1/8	1/2
T2CVA40-4N4-30-AA	250	400	# 4/0	397.5	2	A	4	3	4	7 1/4	3/8	5 1/16	1 1/8	1/2
T2CVA40-4N4-45-AA	250	400	# 4/0	397.5	2	A	4	3	4	7 1/4	3/8	5 1/16	1 1/8	1/2
T2CVA40-4N4-90-AA	250	400	# 4/0	397.5	2	A	4	3	4	7 1/4	3/8	5 1/16	1 1/8	1/2
T2CV60-4N-AA	350	600	336.4	477	2	A	3	3	3	6 1/4	3/8	5 3/8	5/8	1/2
T2CVA60-4N-30-AA	350	600	336.4	477	2	A	3	3	3	6 1/4	3/8	5 3/8	5/8	1/2
T2CVA60-4N-45-AA	350	600	336.4	477	2	A	3	3	3	6 1/4	3/8	5 3/8	5/8	1/2
T2CVA60-4N-90-AA	350	600	336.4	477	2	A	3	3	3	6 1/4	3/8	5 3/8	5/8	1/2
T2CV60-4N4-AA	350	600	336.4	477	2	A	4	3	4	7 1/4	3/8	5 3/8	1 1/8	1/2
T2CVA60-4N4-30-AA	350	600	336.4	477	2	A	4	3	4	7 1/4	3/8	5 3/8	1 1/8	1/2
T2CVA60-4N4-45-AA	350	600	336.4	477	2	A	4	3	4	7 1/4	3/8	5 3/8	1 1/8	1/2
T2CVA60-4N4-90-AA	350	600	336.4	477	2	A	4	3	4	7 1/4	3/8	5 3/8	1 1/8	1/2
T2CV90-2N-AA	500	900	477	795	1	A	2	3	3	6 1/4	11/16	5 7/8	5/8	1/2
T2CVA90-2N-30-AA	500	900	477	795	1	A	2	3	3	6 1/4	11/16	5 7/8	5/8	1/2
T2CVA90-2N-45-AA	500	900	477	795	1	A	2	3	3	6 1/4	11/16	5 7/8	5/8	1/2
T2CVA90-2N-90-AA	500	900	477	795	1	A	2	3	3	6 1/4	11/16	5 7/8	5/8	1/2
T2CV90-4N-AA	500	900	477	795	2	A	3	3	3	6 1/4	1/2	5 7/8	5/8	1/2
T2CVA90-4N-30-AA	500	900	477	795	2	A	3	3	3	6 1/4	1/2	5 7/8	5/8	1/2
T2CVA90-4N-45-AA	500	900	477	795	2	A	3	3	3	6 1/4	1/2	5 7/8	5/8	1/2
T2CVA90-4N-90-AA	500	900	477	795	2	A	3	3	3	6 1/4	1/2	5 7/8	5/8	1/2
T2CV90-4N4-AA	500	900	477	795	2	A	4	3	4	7 1/4	1/2	5 7/8	1 1/8	1/2
T2CVA90-4N4-30-AA	500	900	477	795	2	A	4	3	4	7 1/4	1/2	5 7/8	1 1/8	1/2
T2CVA90-4N4-45-AA	500	900	477	795	2	A	4	3	4	7 1/4	1/2	5 7/8	1 1/8	1/2
T2CVA90-4N4-90-AA	500	900	477	795	2	A	4	3	4	7 1/4	1/2	5 7/8	1 1/8	1/2
T2CV125-2N-AA	900	1250	715	1192.5	1	A	3	3 1/4	3	6 1/2	5/8	6 1/4	5/8	1/2
T2CVA125-2N-30-AA	900	1250	715	1192.5	1	A	3	3 1/4	3	6 1/2	5/8	6 1/4	5/8	1/2
T2CVA125-2N-45-AA	900	1250	715	1192.5	1	A	3	3 1/4	3	6 1/2	5/8	6 1/4	5/8	1/2
T2CVA125-2N-90-AA	900	1250	715	1192.5	1	A	3	3 1/4	3	6 1/2	5/8	6 1/4	5/8	1/2
T2CV125-4N-AA	900	1250	715	1192.5	2	A	3	3 1/4	3	6 1/2	5/8	6 1/4	5/8	1/2
T2CVA125-4N-30-AA	900	1250	715	1192.5	2	A	3	3 1/4	3	6 1/2	5/8	6 1/4	5/8	1/2
T2CVA125-4N-45-AA	900	1250	715	1192.5	2	A	3	3 1/4	3	6 1/2	5/8	6 1/4	5/8	1/2
T2CVA125-4N-90-AA	900	1250	715	1192.5	2	A	3	3 1/4	3	6 1/2	5/8	6 1/4	5/8	1/2
T2CV125-6-4N-AA	900	1250	715	1192.5	2	B	3	3 1/4	3	6 1/2	11/16	9 1/16	5/8	1/2
T2CVA125-6-4N-30-AA	900	1250	715	1192.5	2	B	3	3 1/4	3	6 1/2	11/16	9 1/16	5/8	1/2
T2CVA125-6-4N-45-AA	900	1250	715	1192.5	2	B	3	3 1/4	3	6 1/2	11/16	9 1/16	5/8	1/2
T2CVA125-6-4N-90-AA	900	1250	715	1192.5	2	B	3	3 1/4	3	6 1/2	11/16	9 1/16	5/8	1/2
T2CV125-4N4-AA	900	1250	715	1192.5	2	A	4	3 1/4	4	7 1/2	5/8	6 1/4	1 1/8	1/2
T2CVA125-4N4-30-AA	900	1250	715	1192.5	2	A	4	3 1/4	4	7 1/2	5/8	6 1/4	1 1/8	1/2
T2CVA125-4N4-45-AA	900	1250	715	1192.5	2	A	4	3 1/4	4	7 1/2	5/8	6 1/4	1 1/8	1/2
T2CVA125-4N4-90-AA	900	1250	715	1192.5	2	A	4	3 1/4	4	7 1/2	5/8	6 1/4	1 1/8	1/2

© 2011, AFL, all rights reserved. PP-3-00470, Revision 3, 6.11.18
Specifications are subject to change without notice.

DOSSERT®

TYPE T2CV-N-AA, T2CVA-N-30-AA, T2CVA-N-45-AA, T2CVA-N-90-AA

Aluminum Terminal for 2 Cables

Ordering Information

CATALOG NO.	CABLE RANGE				FIG. NO.	DETAIL	DIMENSIONS IN INCHES							BOLT SIZE
	AAC		ACSR											
	MIN	MAX	MIN	MAX			A	B	C	L	T	W	X	
T2CV125-6-4N4-AA	900	1250	715	1192.5	2	B	4	3 1/4	4	7 1/2	11/16	9 1/16	1 1/8	1/2
T2CVA125-6-4N4-30-AA	900	1250	715	1192.5	2	B	4	3 1/4	4	7 1/2	11/16	9 1/16	1 1/8	1/2
T2CVA125-6-4N4-45-AA	900	1250	715	1192.5	2	B	4	3 1/4	4	7 1/2	11/16	9 1/16	1 1/8	1/2
T2CVA125-6-4N4-90-AA	900	1250	715	1192.5	2	B	4	3 1/4	4	7 1/2	11/16	9 1/16	1 1/8	1/2
T2CV125-6N4-AA	900	1250	715	1192.5	3	A	6	3 1/4	4	7 1/2	5/8	6 1/4	1 1/8	1/2
T2CV125-6N4-30-AA	900	1250	715	1192.5	3	A	6	3 1/4	4	7 1/2	5/8	6 1/4	1 1/8	1/2
T2CV125-6N4-45-AA	900	1250	715	1192.5	3	A	6	3 1/4	4	7 1/2	5/8	6 1/4	1 1/8	1/2
T2CV125-6N4-90-AA	900	1250	715	1192.5	3	A	6	3 1/4	4	7 1/2	5/8	6 1/4	1 1/8	1/2
T2CV160-4N-AA	1250	1600	1113	1431	2	A	3	4 3/8	3	7 5/8	3/4	7 3/8	5/8	5/8
T2CVA160-4N-30-AA	1250	1600	1113	1431	2	A	3	4 3/8	3	7 5/8	3/4	7 3/8	5/8	5/8
T2CVA160-4N-45-AA	1250	1600	1113	1431	2	A	3	4 3/8	3	7 5/8	3/4	7 3/8	5/8	5/8
T2CVA160-4N-90-AA	1250	1600	1113	1431	2	A	3	4 3/8	3	7 5/8	3/4	7 3/8	5/8	5/8
T2CV160-4N4-AA	1250	1600	1113	1431	2	A	4	4 3/8	4	8 5/8	3/4	7 3/8	1 1/8	5/8
T2CVA160-4N4-30-AA	1250	1600	1113	1431	2	A	4	4 3/8	4	8 5/8	3/4	7 3/8	1 1/8	5/8
T2CVA160-4N4-45-AA	1250	1600	1113	1431	2	A	4	4 3/8	4	8 5/8	3/4	7 3/8	1 1/8	5/8
T2CVA160-4N4-90-AA	1250	1600	1113	1431	2	A	4	4 3/8	4	8 5/8	3/4	7 3/8	1 1/8	5/8
T2CV160-6N4-AA	1250	1600	1113	1431	2	A	6	4 3/8	4	8 5/8	3/4	7 3/8	1 1/8	5/8
T2CVA160-6N4-30-AA	1250	1600	1113	1431	2	A	6	4 3/8	4	8 5/8	3/4	7 3/8	1 1/8	5/8
T2CVA160-6N4-45-AA	1250	1600	1113	1431	2	A	6	4 3/8	4	8 5/8	3/4	7 3/8	1 1/8	5/8
T2CVA160-6N4-90-AA	1250	1600	1113	1431	2	A	6	4 3/8	4	8 5/8	3/4	7 3/8	1 1/8	5/8
T2CV200-4N-AA	1500	2000	1272	1780	2	A	3	4 1/2	3	7 3/4	7/8	7 5/8	5/8	5/8
T2CVA200-4N-30-AA	1500	2000	1272	1780	2	A	3	4 1/2	3	7 3/4	7/8	7 5/8	5/8	5/8
T2CVA200-4N-45-AA	1500	2000	1272	1780	2	A	3	4 1/2	3	7 3/4	7/8	7 5/8	5/8	5/8
T2CVA200-4N-90-AA	1500	2000	1272	1780	2	A	3	4 1/2	3	7 3/4	7/8	7 5/8	5/8	5/8
T2CV200-4N4-AA	1500	2000	1272	1780	2	A	4	4 1/2	4	8 3/4	7/8	7 5/8	1 1/8	5/8
T2CVA200-4N4-30-AA	1500	2000	1272	1780	2	A	4	4 1/2	4	8 3/4	7/8	7 5/8	1 1/8	5/8
T2CVA200-4N4-45-AA	1500	2000	1272	1780	2	A	4	4 1/2	4	8 3/4	7/8	7 5/8	1 1/8	5/8
T2CVA200-4N4-90-AA	1500	2000	1272	1780	2	A	4	4 1/2	4	8 3/4	7/8	7 5/8	1 1/8	5/8
T2CV200-6N4-AA	1500	2000	1272	1780	3	A	6	4 1/2	4	8 3/4	7/8	7 5/8	1 1/8	5/8
T2CVA200-6N4-30-AA	1500	2000	1272	1780	3	A	6	4 1/2	4	8 3/4	7/8	7 5/8	1 1/8	5/8
T2CVA200-6N4-45-AA	1500	2000	1272	1780	3	A	6	4 1/2	4	8 3/4	7/8	7 5/8	1 1/8	5/8
T2CVA200-6N4-90-AA	1500	2000	1272	1780	3	A	6	4 1/2	4	8 3/4	7/8	7 5/8	1 1/8	5/8
T2CV250-4N-AA	2000	2500	1780	2300	2	A	3	4 1/2	3	7 3/4	7/8	8	5/8	5/8
T2CVA250-4N-30-AA	2000	2500	1780	2300	2	A	3	4 1/2	3	7 3/4	7/8	8	5/8	5/8
T2CVA250-4N-45-AA	2000	2500	1780	2300	2	A	3	4 1/2	3	7 3/4	7/8	8	5/8	5/8
T2CVA250-4N-90-AA	2000	2500	1780	2300	2	A	3	4 1/2	3	7 3/4	7/8	8	5/8	5/8
T2CV250-4N4-AA	2000	2500	1780	2300	2	A	4	4 1/2	4	8 3/4	7/8	8	1 1/8	5/8
T2CVA250-4N4-30-AA	2000	2500	1780	2300	2	A	4	4 1/2	4	8 3/4	7/8	8	1 1/8	5/8
T2CVA250-4N4-45-AA	2000	2500	1780	2300	2	A	4	4 1/2	4	8 3/4	7/8	8	1 1/8	5/8
T2CVA250-4N4-90-AA	2000	2500	1780	2300	2	A	4	4 1/2	4	8 3/4	7/8	8	1 1/8	5/8
T2CV250-6N4-AA	2000	2500	1780	2300	3	A	6	4 1/2	4	8 3/4	7/8	8	1 1/8	5/8
T2CVA250-6N4-30-AA	2000	2500	1780	2300	3	A	6	4 1/2	4	8 3/4	7/8	8	1 1/8	5/8
T2CVA250-6N4-45-AA	2000	2500	1780	2300	3	A	6	4 1/2	4	8 3/4	7/8	8	1 1/8	5/8
T2CVA250-6N4-90-AA	2000	2500	1780	2300	3	A	6	4 1/2	4	8 3/4	7/8	8	1 1/8	5/8
T2CV250-6-4N-AA	2000	2500	1780	2300	2	B	3	4 1/2	3	7 3/4	7/8	9 15/16	5/8	5/8
T2CVA250-6-4N-30-AA	2000	2500	1780	2300	2	B	3	4 1/2	3	7 3/4	7/8	9 15/16	5/8	5/8
T2CVA250-6-4N-45-AA	2000	2500	1780	2300	2	B	3	4 1/2	3	7 3/4	7/8	9 15/16	5/8	5/8
T2CVA250-6-4N-90-AA	2000	2500	1780	2300	2	B	3	4 1/2	3	7 3/4	7/8	9 15/16	5/8	5/8
T2CV250-6-4N4-AA	2000	2500	1780	2300	2	B	4	4 1/2	4	8 3/4	7/8	9 15/16	1 1/8	5/8
T2CVA250-6-4N4-30-AA	2000	2500	1780	2300	2	B	4	4 1/2	4	8 3/4	7/8	9 15/16	1 1/8	5/8
T2CVA250-6-4N4-45-AA	2000	2500	1780	2300	2	B	4	4 1/2	4	8 3/4	7/8	9 15/16	1 1/8	5/8
T2CVA250-6-4N4-90-AA	2000	2500	1780	2300	2	B	4	4 1/2	4	8 3/4	7/8	9 15/16	1 1/8	5/8

© 2011, AFL, all rights reserved. PP-3-00470, Revision 3, 6.11.18
Specifications are subject to change without notice.

DOSSERT®

TYPE T2CV-N-AA, T2CVA-N-30-AA, T2CVA-N-45-AA, T2CVA-N-90-AA

Aluminum Terminal for 2 Cables

Ordering Information

CATALOG NO.	CABLE RANGE				FIG. NO.	DETAIL	DIMENSIONS IN INCHES							BOLT SIZE
	AAC		ACSR											
	MIN	MAX	MIN	MAX			A	B	C	L	T	W	X	
T2CV250-6-6N4-AA	2000	2500	1780	2300	3	B	6	4 1/2	4	8 3/4	7/8	9 15/16	1 1/8	5/8
T2CVA250-6-6N4-30-AA	2000	2500	1780	2300	3	B	6	4 1/2	4	8 3/4	7/8	9 15/16	1 1/8	5/8
T2CVA250-6-6N4-45-AA	2000	2500	1780	2300	3	B	6	4 1/2	4	8 3/4	7/8	9 15/16	1 1/8	5/8
T2CVA250-6-6N4-90-AA	2000	2500	1780	2300	3	B	6	4 1/2	4	8 3/4	7/8	9 15/16	1 1/8	5/8
T2CV364-5N4-AA	3000	3640	NA	NA	3	A	5	4 1/2	3	8 3/4	7/8	8 3/4	1 1/8	5/8
T2CVA364-5N4-30-AA	3000	3640	NA	NA	3	A	5	4 1/2	3	8 3/4	7/8	8 3/4	1 1/8	5/8
T2CVA364-5N4-45-AA	3000	3640	NA	NA	3	A	5	4 1/2	3	8 3/4	7/8	8 3/4	1 1/8	5/8
T2CVA364-5N4-90-AA	3000	3640	NA	NA	3	A	5	4 1/2	3	8 3/4	7/8	8 3/4	1 1/8	5/8

© 2011, AFL, all rights reserved. PP-3-00470, Revision 3, 6.11.18
Specifications are subject to change without notice.

230 kV Aluminum Bolted Terminal Connectors

DOSSERT®

TYPE TCV-N-AA, TCVA-N-15-AA, TCVA-N-30-AA, TCVA-N-45-AA, TCVA-N-90-AA

NEMA Terminal for Cable Terminal Lug Cable

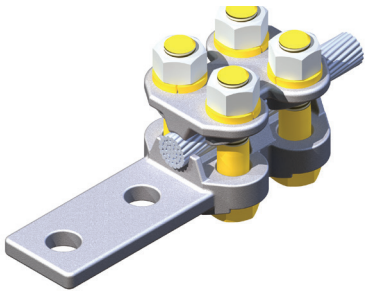

A variable clamp type terminal for connecting a cable to a flat bar bus. Each size terminal accommodates a wide range of cable sizes. Designed to carry the full rated load of the maximum conductor without overheating. Contact pads other than those listed below can be promptly furnished to any specified size or drilling. The variable type terminal exhibits its advantage in that one connector will accommodate a number of cable sizes. This minimizes greatly the problem of stocking various sizes of connectors and the errors which occur in specifying connectors for specific cable sizes.

Material

Aluminum Alloy

Hardware

Yellow anodized aluminum nuts, bolts and lockwashers

Notes

- For Finished Surface on both sides of pad, add "-F" to catalog number. EX: TCV25-4NF-AA.
- For Contact Surfaces prefilled with Dostex and packaged in Polyethylene Bag, add "-LP" to catalog number. EX: TCV60-2N-AA-LP.
- For Stainless Steel bolts, lockwashers and Everdur nuts, add "-SSHBN" to catalog number. EX: TCV300-6N4-AA-SSHBN.

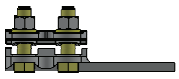

TCV-N-AA

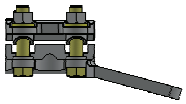

TCVA-N-15-AA

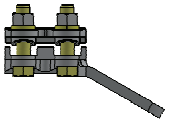

TCVA-N-30-AA

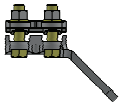

TCVA-N-45-AA

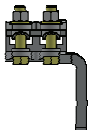

TCVA-N-90-AA

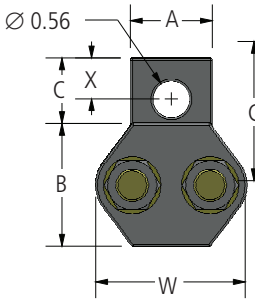

FIG. 1

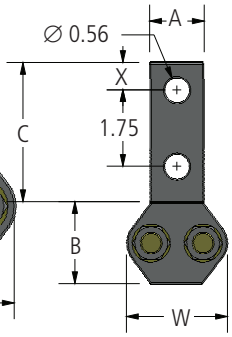

FIG. 2

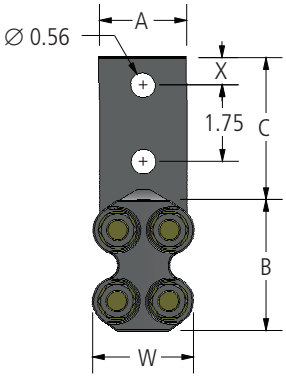

FIG. 3

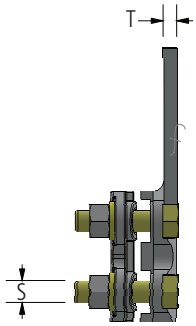

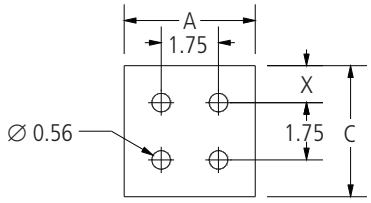

FIG. 4

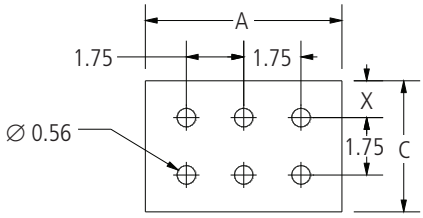

FIG. 5

© 2011, AFL, all rights reserved. PP-3-00473, Revison 6, 4.9.2021
Specifications are subject to change without notice.

DOSSERT®

TYPE TCV-N-AA, TCVA-N-15-AA, TCVA-N-30-AA, TCVA-45-AA, TCVA-90-AA

NEMA Terminal for Cable Terminal Lug Cable

Ordering Information

CATALOG NUMBER	CABLE RANGE				FIG. NO.	DIMENSIONS IN INCHES						
	ALUMINUM		ACSR									
	MIN	MAX	MIN	MAX		A	B	C	W	X	T	S
TCV10-1-AA	#4 STR	1/0 STR	#4	1/0	1	1.50	1.88	1.44	2.31	0.63	0.31	1/2
TCV10-2N-AA	#4 STR	1/0 STR	#4	1/0	2	1.50	1.88	3.25	2.31	0.63	0.31	1/2
TCV25-2N-AA	1/0	250	1/0	4/0	3	1.63	3.00	3.25	2.31	0.63	0.31	1/2
TCV25-4N-AA	1/0	250	1/0	4/0	4	3.00	3.00	3.25	2.31	0.63	0.31	1/2
TCV25-4N4-AA	1/0	250	1/0	4/0	4	4.00	3.00	4.25	2.31	1.13	0.31	1/2
TCV40-2N-AA	250	400	4/0	397.5	3	2.00	3.00	3.25	2.50	0.63	0.38	1/2
TCV40-4N-AA	250	400	4/0	397.5	4	3.00	3.00	3.25	2.50	0.63	0.38	1/2
TCV40-4N4-AA	250	400	4/0	397.5	4	4.00	3.00	4.25	2.50	1.13	0.38	1/2
TCV60-2N3-AA	350	600	336.4	477	3	2.00	3.00	3.38	2.69	0.63	0.38	1/2
TCV60-2N-AA	350	600	336.4	477	3	1.81	3.00	3.25	2.69	0.63	0.38	1/2
TCV60-4N-AA	350	600	336.4	477	4	3.00	3.00	3.38	2.69	0.63	0.38	1/2
TCV60-4N4-AA	350	600	336.4	477	4	4.00	3.00	4.25	2.69	1.13	0.38	1/2
TCV60-6N4-AA	350	600	336.4	477	5	6.00	3.00	4.25	2.69	1.13	0.44	1/2
TCV90-2N-AA	500	900	477	795	3	2.00	3.00	3.25	2.88	0.63	0.50	1/2
TCV90-4N-AA	500	900	477	795	4	3.00	3.00	3.25	2.88	0.63	0.50	1/2
TCV90-4N4-AA	500	900	477	795	4	4.00	3.00	4.25	2.88	1.13	0.50	1/2
TCV125-2N-AA	900	1250	715	1113	3	2.63	3.25	3.25	3.06	0.63	0.50	1/2
TCV125-4N-AA	900	1250	715	1113	4	3.00	3.25	3.25	3.06	0.63	0.50	1/2
TCV125-4N4-AA	900	1250	715	1113	4	4.00	3.25	4.25	3.06	1.13	0.50	1/2
TCV160-2N-AA	1250	1600	1113	1431	3	2.00	4.38	3.25	3.63	0.63	0.56	5/8
TCV160-4N-AA	1250	1600	1113	1431	4	3.00	4.38	3.25	3.63	0.63	0.56	5/8
TCV160-4N4-AA	1250	1600	1113	1431	4	4.00	4.38	4.25	3.63	1.13	0.56	5/8
TCV160-6N4-AA	1250	1600	1113	1431	5	6.00	4.38	4.25	3.63	1.13	0.56	5/8
TCV200-2N-AA	1500	2000	1272	1780	3	2.00	4.50	3.25	3.88	0.63	0.69	5/8
TCV200-4N-AA	1500	2000	1272	1780	4	3.00	4.50	3.25	3.88	0.63	0.69	5/8
TCV200-4N4-AA	1500	2000	1272	1780	4	4.00	4.50	4.25	3.88	1.13	0.69	5/8
TCV200-6N4-AA	1500	2000	1272	1780	5	6.00	4.50	4.25	3.88	1.13	0.69	5/8
TCV250-4N-AA	2000	2500	1780	2300	4	3.00	4.50	3.25	3.94	0.63	0.75	5/8
TCV250-4N4-AA	2000	2500	1780	2300	4	4.00	4.50	4.25	3.94	1.13	0.75	5/8
TCV250-6N4-AA	2000	2500	1780	2300	5	6.00	4.50	4.25	3.94	1.13	0.75	5/8
TCV300-6N4-AA	2500	3000	1780	2870	5	6.00	6.00	4.25	4.13	1.13	1.00	5/8

© 2011, AFL, all rights reserved. PP-3-00473, Revison 6, 4.9.2021
Specifications are subject to change without notice.

230 kV Aluminum Bolted Terminal Connectors

DOSSERT®

TYPE TCX-AA
Wide Range Terminal

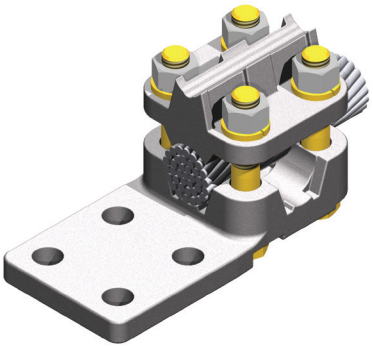

TCX can be used as a cable tap terminal or a straight terminal. A variable clamp type terminal or tap for connecting a cable or pipe to a flat bar bus. Each size accommodates a wide range of cable sizes. New terminal series reduces stock with extended range taking capabilities. Excellent for use due to storm damage. Three terminals provide cable range from #2 solid to 3500 MCM. Available in pad sizes from two-hole to six-hole pads.

Material

Aluminum Alloy

Hardware

Yellow anodized aluminum nuts, bolts and lockwashers.

Notes

- For angled pad, add "A" to prefix and angle to catalog number. EX: TCXA350-4N4-45-AA
- For Grade Five Galvanized Steel Hardware, add "-GS5" to catalog number. EX: TCX350-4N4-AA-GS5

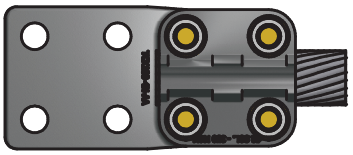

TERMINAL USE

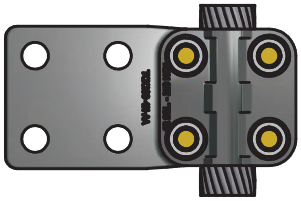

TAP USE

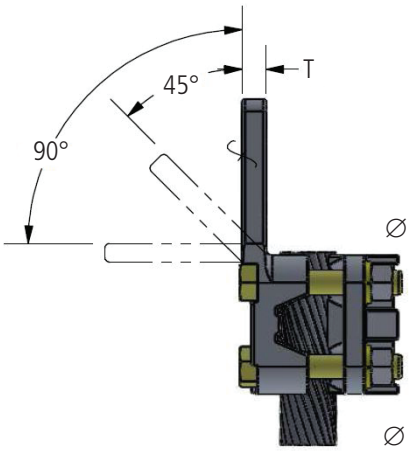

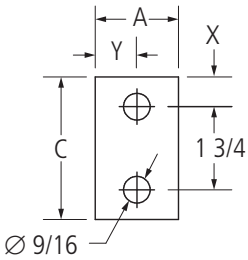

FIG. 1

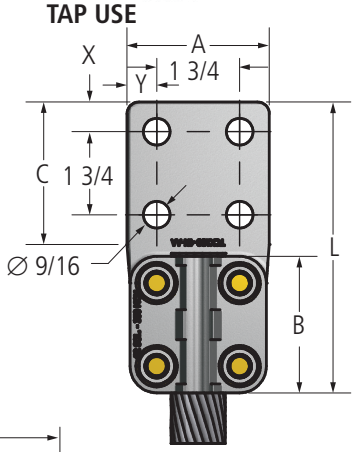

FIG. 2

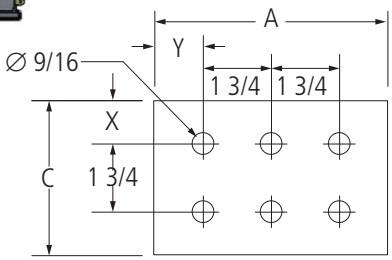

FIG. 3

© 2011, AFL, all rights reserved. PP-3-00475, Revision 5, 8.8.2022
Specifications are subject to change without notice.

DOSSERT®

TYPE TCX-AA
Wide Range Terminal

Ordering Information

CATALOG NUMBER	FIG. NO.	CONDUCTOR RANGE (AAC)			S.P.S.	DIMENSIONS IN INCHES						
		ACSR OR AAC	RUN OR TAP									
			MIN	MAX	RUN OR TAP	A	B	C	L	T	X	Y
TCX100-2N-AA	1	AAC	#2 SOL.	1000 MCM	3/8 - 3/4	2 1/32	3 1/16	3 1/8	6 7/16	1/2	5/8	1 1/64
		ACSR	4(7/1)	900(36/1)								
TCX100-4N-AA	2	AAC	#2 SOL.	1000 MCM	3/8 - 3/4	3	2 7/8	3	6 1/8	1/2	5/8	5/8
		ACSR	4(7/1)	900(36/1)								
TCX100-4N4-AA	2	AAC	#2 SOL.	1000 MCM	3/8 - 3/4	4	2 7/8	4	7 1/8	1/2	1 1/8	1 1/8
		ACSR	4 (7/1)	900 (36/1)								
TCX100-6NA-AA	3	AAC	#2 SOL.	1000 MCM	3/8 - 3/4	6	2 7/8	4	7 1/8	1/2	1 1/8	1 1/4
		ACSR	4(7/1)	900(36/1)								
TCX200-4N-AA	2	AAC	4/0 STR.	2000 MCM	3/8 - 1 1/4	3	3 3/8	3	6 5/8	11/16	5/8	5/8
		ACSR	4/0(6/1)	1780(84/19)								
TCX200-4N4-AA	2	AAC	4/0 STR.	2000 MCM	3/8 - 1 1/4	4	3 3/8	4	7 5/8	11/16	1 1/8	1 1/8
		ACSR	4/0(6/1)	1780(84/19)								
TCX350-4N4-AA	2	AAC	795 MCM	3500 MCM	–	4	4 1/2	4	9	3/4	1 1/8	1 1/8
		ACSR	795(54/7)	2515(76/19)								
TCX350-6N4-AA	3	AAC	795 MCM	3500 MCM	–	6	4 1/2	4 1/2	9	11/16	1 1/8	1 1/4
		ACSR	795(54/7)	2515(76/19)								

© 2011, AFL, all rights reserved. PP-3-00475, Revision 5, 8.8.2022
Specifications are subject to change without notice.

DOSSERT®

TYPE TP-N-AA, TPA-N-30-AA, TPA-N-45-AA, TPA-N-60-AA, TPA-N-90-AA

Terminal Pipe Lug

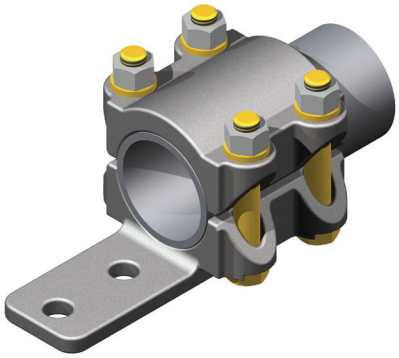

A bolted clamp type terminal for connecting standard pipe size tubular buses to flat surfaces.

Material

Aluminum Alloy

Hardware

Yellow anodized aluminum nuts, bolts and lockwashers.

Notes

- Add an 'A' after TP. For a 30°, add '-30'; for a 45°, add '-45'; for a 60°, add '-60'; for a 90°, add '-90'. For a 1" pipe, with a 2 hole pad, at 45°, order TPA100-2N-45-AA.
- For a finished pad on both sides, add "F" to the end of pad number in catalog number EX: TPA100-2NF-45-AA.
- For contact surfaces coated with NO-OX-ID and packaged in polyethelene bag, add suffix "LP" to end of catalog number. EX: TP200-4N4-AA-LP

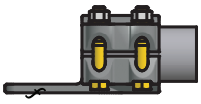

TP-N-AA

TPA-N-30-AA

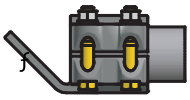

TPA-N-45-AA

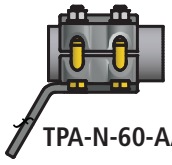

TPA-N-60-AA

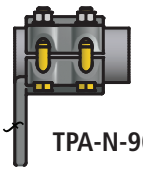

TPA-N-90-AA

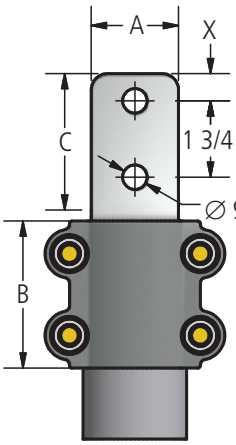

FIG. 1

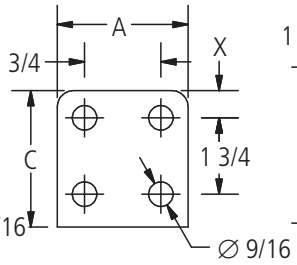

FIG. 2

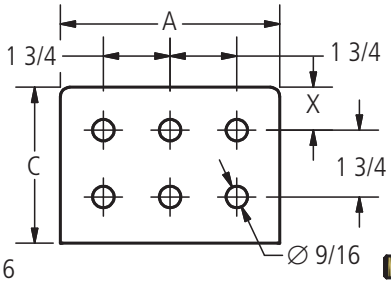

FIG. 3

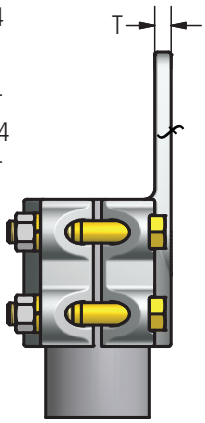

© 2011, AFL, all rights reserved. PP-3-00478, Revision 5, 1.30.19
Specifications are subject to change without notice.

DOSSERT®

TYPE TP-N-AA, TPA-N-30-AA, TPA-N-45-AA, TPA-N-60-AA, TPA-N-90-AA

Terminal Pipe Lug

Ordering Information

CATALOG NUMBER					SPS	FIG. NO.	DIMENSIONS IN INCHES				
STRAIGHT	30 DEGREE	45 DEGREE	60 DEGREE	90 DEGREE			A	B	C	T	X
TP50-2N-AA	TPA50-2N-30-AA	TPA50-2N-45-AA	TPA50-2N-60-AA	TPA50-2N-90-AA	1/2	1	1 1/2	2 1/2	3	3/8	5/8
TP50-4N-AA	TPA50-4N-30-AA	TPA50-4N-45-AA	TPA50-4N-60-AA	TPA50-4N-90-AA	1/2	2	3	2 1/2	3	3/8	5/8
TP75-2N-AA	TPA75-2N-30-AA	TPA75-2N-45-AA	TPA75-2N-60-AA	TPA75-2N-90-AA	3/4	1	1 1/2	2 3/4	3	3/8	5/8
TP75-4N-AA	TPA75-4N-30-AA	TPA75-4N-45-AA	TPA75-4N-60-AA	TPA75-4N-90-AA	3/4	2	3	2 3/4	3	3/8	5/8
TP100-2N-AA	TPA100-2N-30-AA	TPA100-2N-45-AA	TPA100-2N-60-AA	TPA100-2N-90-AA	1	1	1 3/4	2 3/4	3	3/8	5/8
TP100-4N-AA	TPA100-4N-30-AA	TPA100-4N-45-AA	TPA100-4N-60-AA	TPA100-4N-90-AA	1	2	3	2 3/4	3	3/8	5/8
TP125-2N-AA	TPA125-2N-30-AA	TPA125-2N-45-AA	TPA125-2N-60-AA	TPA125-2N-90-AA	1 1/4	1	2	3	3	1/2	5/8
TP125-4N-AA	TPA125-4N-30-AA	TPA125-4N-45-AA	TPA125-4N-60-AA	TPA125-4N-90-AA	1 1/4	2	3	3	3	1/2	5/8
TP125-4N4-AA	TPA125-4N4-30-AA	TPA125-4N4-45-AA	TPA125-4N4-60-AA	TPA125-4N4-90-AA	1 1/4	2	4	3	4	1/2	1 1/8
TP150-2N-AA	TPA150-2N-30-AA	TPA150-2N-45-AA	TPA150-2N-60-AA	TPA150-2N-90-AA	1 1/2	1	2	3	3	1/2	5/8
TP150-4N-AA	TPA150-4N-30-AA	TPA150-4N-45-AA	TPA150-4N-60-AA	TPA150-4N-90-AA	1 1/2	2	3	3	3	1/2	5/8
TP150-4N4-AA	TPA150-4N4-30-AA	TPA150-4N4-45-AA	TPA150-4N4-60-AA	TPA150-4N4-90-AA	1 1/2	2	4	3	4	1/2	1 1/8
TP200-2N-AA	TPA200-2N-30-AA	TPA200-2N-45-AA	TPA200-2N-60-AA	TPA200-2N-90-AA	2	1	2	3 1/4	3	1/2	5/8
TP200-4N-AA	TPA200-4N-30-AA	TPA200-4N-45-AA	TPA200-4N-60-AA	TPA200-4N-90-AA	2	2	3	3 1/4	3	1/2	5/8
TP200-4N4-AA	TPA200-4N4-30-AA	TPA200-4N4-45-AA	TPA200-4N4-60-AA	TPA200-4N4-90-AA	2	2	4	3 1/4	4	1/2	1 1/8
TP250-2N-AA	TPA250-2N-30-AA	TPA250-2N-45-AA	TPA250-2N-60-AA	TPA250-2N-90-AA	2 1/2	1	2	3 1/4	3	5/8	5/8
TP250-4N-AA	TPA250-4N-30-AA	TPA250-4N-45-AA	TPA250-4N-60-AA	TPA250-4N-90-AA	2 1/2	2	3	3 1/4	3	5/8	5/8
TP250-4N4-AA	TPA250-4N4-30-AA	TPA250-4N4-45-AA	TPA250-4N4-60-AA	TPA250-4N4-90-AA	2 1/2	2	4	3 1/4	4	5/8	1 1/8
TP300-4S4-AA	TPA300-4S4-30-AA	TPA300-4S4-45-AA	TPA300-4S4-60-AA	TPA300-4S4-90-AA	3	2	4	3 3/4	4	5/8	1
TP300-2N-AA	TPA300-2N-30-AA	TPA300-2N-45-AA	TPA300-2N-60-AA	TPA300-2N-90-AA	3	1	2	3 3/4	3	5/8	5/8
TP300-4N-AA	TPA300-4N-30-AA	TPA300-4N-45-AA	TPA300-4N-60-AA	TPA300-4N-90-AA	3	2	3	3 3/4	3	5/8	5/8
TP300-4N4-AA	TPA300-4N4-30-AA	TPA300-4N4-45-AA	TPA300-4N4-60-AA	TPA300-4N4-90-AA	3	2	4	3 3/4	4	5/8	1 1/8
TP300-6N4-AA	TPA300-6N4-30-AA	TPA300-6N4-45-AA	TPA300-6N4-60-AA	TPA300-6N4-90-AA	3	3	6	3 3/4	4	5/8	1 1/8
TP350-2N-AA	TPA350-2N-30-AA	TPA350-2N-45-AA	TPA350-2N-60-AA	TPA350-2N-90-AA	3 1/2	1	3	3 1/2	3	3/4	5/8
TP350-4N-AA	TPA350-4N-30-AA	TPA350-4N-45-AA	TPA350-4N-60-AA	TPA350-4N-90-AA	3 1/2	2	3	3 1/2	3	3/4	5/8
TP350-4N4-AA	TPA350-4N4-30-AA	TPA350-4N4-45-AA	TPA350-4N4-60-AA	TPA350-4N4-90-AA	3 1/2	2	4	3 1/2	4	3/4	1 1/8
TP350-6N4-AA	TPA350-6N4-30-AA	TPA350-6N4-45-AA	TPA350-6N4-60-AA	TPA350-6N4-90-AA	3 1/2	3	6	3 1/2	4	3/4	1 1/8
TP400-2N-AA	TPA400-2N-30-AA	TPA400-2N-45-AA	TPA400-2N-60-AA	TPA400-2N-90-AA	4	2	3	3 3/4	3	3/4	5/8
TP400-4N-AA	TPA400-4N-30-AA	TPA400-4N-45-AA	TPA400-4N-60-AA	TPA400-4N-90-AA	4	2	3	3 3/4	3	3/4	5/8
TP400-4N4-AA	TPA400-4N4-30-AA	TPA400-4N4-45-AA	TPA400-4N4-60-AA	TPA400-4N4-90-AA	4	2	4	3 3/4	4	3/4	1 1/8
TP400-6N4-AA	TPA400-6N4-30-AA	TPA400-6N4-45-AA	TPA400-6N4-60-AA	TPA400-6N4-90-AA	4	3	6	3 3/4	4	13/16	1 1/8
TP450-4N4-AA	TPA450-4N4-30-AA	TPA450-4N4-45-AA	TPA450-4N4-60-AA	TPA450-4N4-90-AA	4 1/2	2	4	6	4 1/4	7/8	1 1/8
TP500-4N-AA	TPA500-4N-30-AA	TPA500-4N-45-AA	TPA500-4N-60-AA	TPA500-4N-90-AA	5	2	3	7	3	7/8	5/8
TP500-4N4-AA	TPA500-4N4-30-AA	TPA500-4N4-45-AA	TPA500-4N4-60-AA	TPA500-4N4-90-AA	5	2	4	7	4	1 1/4	1 1/8
TP500-6N4-AA	TPA500-6N4-30-AA	TPA500-6N4-45-AA	TPA500-6N4-60-AA	TPA500-6N4-90-AA	5	3	6	7	4	7/8	1 1/8
TP600-4N4-AA	TPA600-4N4-30-AA	TPA600-4N4-45-AA	TPA600-4N4-60-AA	TPA600-4N4-90-AA	6	2	4	5	4	1 1/4	1 1/8
TP600-6N4-AA	TPA600-6N4-30-AA	TPA600-6N4-45-AA	TPA600-6N4-60-AA	TPA600-6N4-90-AA	6	3	6	5	4	1 1/4	1 1/8
TP800R-6N4-AA	TPA800R-6N4-30-AA	TPA800R-6N4-45-AA	TPA800R-6N4-60-AA	TPA800R-6N4-90-AA	8 O.D.	3	6	5	4	1 1/8	1 1/8

© 2011, AFL, all rights reserved. PP-3-00478, Revision 5, 1.30.19
Specifications are subject to change without notice.

230 kV Aluminum Bolted Terminal Connectors

DOSSERT®

TYPE TPC-N-AA
Terminal Connector

Terminal is designed to connect to aluminum or copper pads. Pad conforms to NEMA standards.

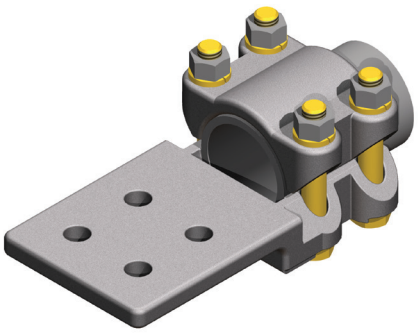

Material

Aluminum Alloy

Hardware

Yellow anodized aluminum nuts, bolts and lockwashers.

Notes

- For Contact surfaces prefilled with AFC and packaged in plyethelene bag, add "-LP" to catalog number. EX: TPC200-4N4-AA-LP
- For Finish on both sides of pad, add "F" to catalog number. EX: TPC200-4N4F-AA
- For Stainless Steel bolts, lockwashers and Everdur nuts, add "-SSHBN" to catalog number. EX: TPC250-4N4-AA-SSHBN
- For Galvanized Steel Hardware, add "-GS" to catalog number. EX: TPC600-4N4-AA-GS

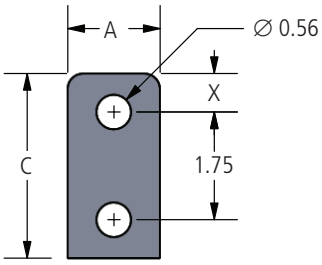

FIG. 1

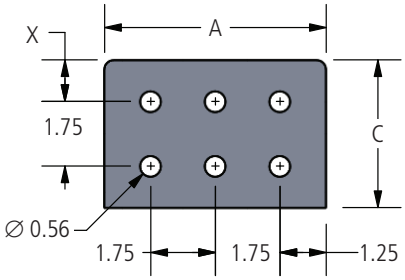

FIG. 3

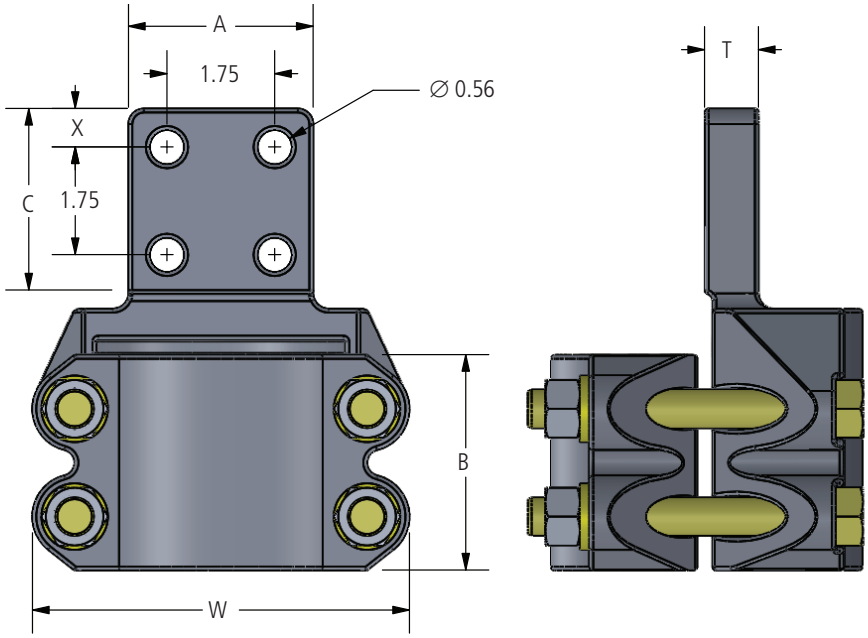

FIG. 2

© 2011, AFL, all rights reserved. PP-3-00479, Revision 3, 11.15.2022
Specifications are subject to change without notice.

DOSSERT®

TYPE TPC-N-AA
Terminal Connector

Ordering Information

CATALOG NO	SPS	FIG. NO.	DIMENSIONS IN INCHES						
			A	B	C	T	W	X	BOLT SIZE
TPC75-2N-AA	3/4	1	1.50	2.75	3.00	0.38	2.75	0.63	1/2
TPC75-4N-AA	3/4	2	3.00	2.75	3.00	0.38	2.75	0.63	1/2
TPC100-2N-AA	1	1	2.00	2.75	3.00	0.38	3.07	0.63	1/2
TPC100-4N-AA	1	2	3.00	2.75	3.00	0.38	3.07	0.63	1/2
TPC125-2N-AA	1 1/4	1	2.00	3.00	3.00	0.50	3.45	0.63	1/2
TPC125-4N-AA	1 1/4	2	3.00	3.00	3.00	0.50	3.45	0.63	1/2
TPC125-4N4-AA	1 1/4	2	4.00	3.00	4.00	0.50	3.45	1.13	1/2
TPC150-2N-AA	1 1/2	1	2.00	3.00	3.00	0.50	3.69	0.63	1/2
TPC150-4N-AA	1 1/2	2	3.00	3.00	3.00	0.50	3.69	0.63	1/2
TPC150-4N4-AA	1 1/2	2	4.00	3.00	4.00	0.50	3.69	1.13	1/2
TPC200-2N-AA	2	1	2.00	3.25	3.00	0.63	4.13	0.63	1/2
TPC200-4N-AA	2	2	3.00	3.25	3.00	0.63	4.13	0.63	1/2
TPC200-4N4-AA	2	2	4.00	3.25	4.00	0.63	4.13	1.13	1/2
TPC250-2N-AA	2 1/2	1	2.00	3.25	3.00	0.63	4.63	0.63	1/2
TPC250-4N-AA	2 1/2	2	3.00	3.25	3.00	0.63	4.63	0.63	1/2
TPC250-4N4-AA	2 1/2	2	4.00	3.25	4.00	0.63	4.63	1.13	1/2
TPC300-2N-AA	3	1	2.00	3.75	3.00	0.63	5.63	0.63	5/8
TPC300-3N3-AA	3	2	3.00	3.75	3.00	0.63	5.63	0.63	5/8
TPC300-4N-AA	3	2	4.75	3.75	3.00	0.88	5.63	0.63	5/8
TPC300-4N4-AA	3	2	4.00	3.75	4.00	0.88	5.63	1.13	5/8
TPC350-3N3-AA	3 1/2	2	3.00	3.50	3.00	0.75	6.13	0.63	5/8
TPC350-4N-AA	3 1/2	2	3.00	3.50	3.00	0.88	6.13	0.63	5/8
TPC350-4N4-AA	3 1/2	2	4.00	3.50	4.00	0.75	6.13	1.13	5/8
TPC350-6N4-AA	3 1/2	3	6.00	3.50	4.00	0.75	6.13	1.13	5/8
TPC400-3N3-AA	4	2	3.00	3.75	3.00	0.75	6.63	1.13	5/8
TPC400-4N-AA	4	2	3.00	3.75	3.00	0.75	6.63	0.63	5/8
TPC400-4N4-AA	4	2	4.00	3.75	4.00	0.75	6.63	1.13	5/8
TPC400-5N4-AA	4	3	5.00	3.75	4.00	0.75	6.63	1.13	5/8
TPC400-6N4-AA	4	3	6.00	3.75	4.00	0.75	6.63	1.13	5/8
TPC500-4N4-AA	*5	2	4.00	7.00	4.00	0.88	7.69	1.13	5/8
TPC500-5N4-AA	*5	3	5.00	7.00	4.00	1.00	7.69	1.13	5/8
TPC500-6N4-AA	*5	3	6.00	7.00	4.00	1.00	7.69	1.13	5/8
TPC600-4N-AA	*6	2	3.00	7.00	3.00	1.00	8.76	0.63	5/8
TPC600-4N4-AA	*6	2	4.00	7.00	4.00	1.00	8.76	1.13	5/8
TPC600-6N4-AA	*6	3	6.00	7.00	4.00	1.00	8.76	1.13	5/8

* Supplied with 6 Clamping Bolts

© 2011, AFL, all rights reserved. PP-3-00479, Revision 3, 11.15.2022
Specifications are subject to change without notice.

230 kV Aluminum Bolted Terminal Connectors

DOSSERT®

TYPE U2L-N-AA, U2LA-N-45-AA, U2LA-N-90-AA

Aluminum Two Cable U Bolt Terminal

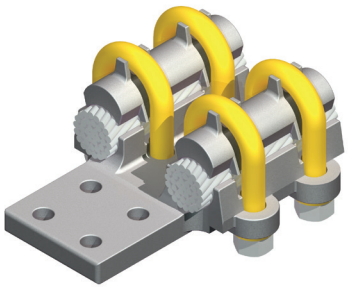

Terminals are designed to connect AAC or ACSR conductors to aluminum pads. Pads conform to NEMA standards. Terminals are designed with universal grooves to accept a wide range of conductor sizes. Captured U-bolts permit one wrench tightening of nuts.

Material

Aluminum Alloy

Hardware

Aluminum U-bolts, lockwashers and nuts.

Notes

1. Contact pads can be furnished to any specification size and hole pattern.

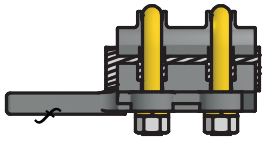

U2L-N-AA

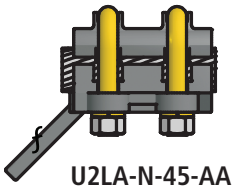

U2LA-N-45-AA

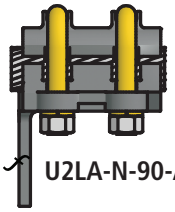

U2LA-N-90-AA

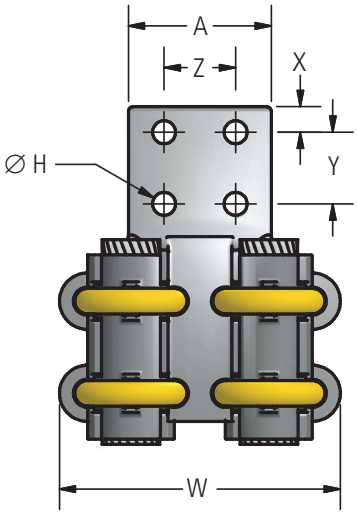

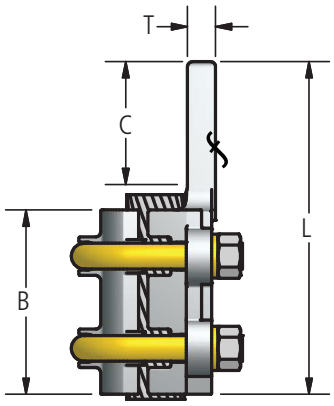

Ordering Information

CATALOG NUMBER			CABLE RANGE		DIMENSIONS IN INCHES									
STRAIGHT	45 DEGREE	90 DEGREE	MIN	MAX	A	B	C	H	L	T	W	X	Y&Z	U-BOLT
U2L30-4N-AA	U2LA30-4N-45-AA	U2LA30-4N-90-AA	1/0	300	3.00	3.25	3.00	0.56	6.38	0.38	4.75	0.63	1.75	1/2
U2L50-4N-AA	U2LA50-4N-45-AA	U2LA50-4N-90-AA	300	500	3.00	3.25	3.00	0.56	6.50	0.38	5.00	0.63	1.75	1/2
U2L50-4N4-AA	U2LA50-4N4-45-AA	U2LA50-4N4-90-AA	300	500	4.00	3.25	4.00	0.56	7.50	0.38	5.00	1.13	1.75	1/2
U2L90-4N-AA	U2LA90-4N-45-AA	U2LA90-4N-90-AA	500	900	3.00	3.50	3.00	0.56	6.75	0.50	5.63	0.63	1.75	1/2
U2L90-4N4-AA	U2LA90-4N4-45-AA	U2LA90-4N4-90-AA	500	900	4.00	3.50	4.00	0.56	7.75	0.50	5.63	1.13	1.75	1/2
U2L100-4N-AA	U2LA100-4N-45-AA	U2LA100-4N-90-AA	750	1000	3.00	3.50	3.00	0.56	6.75	0.50	5.75	0.63	1.75	1/2
U2L100-4N4-AA	U2LA100-4N4-45-AA	U2LA100-4N4-90-AA	750	1000	4.00	3.50	4.00	0.56	7.75	0.50	5.75	1.13	1.75	1/2
U2L150-4N-AA	U2LA150-4N-45-AA	U2LA150-4N-90-AA	1000	1500	3.50	4.50	3.00	0.56	8.00	0.69	6.88	0.63	1.75	5/8
U2L150-4N4-AA	U2LA150-4N4-45-AA	U2LA150-4N4-90-AA	1000	1500	4.00	4.50	4.00	0.56	8.75	0.69	6.88	1.13	1.75	5/8
U2L200-4N4-AA	U2LA200-4N4-45-AA	U2LA200-4N4-90-AA	1500	2000	4.00	4.50	4.00	0.56	9.00	0.69	7.38	1.13	1.75	5/8

© 2011, AFL, all rights reserved. PP-3-00486, Revision 3, 8.7.2020
Specifications are subject to change without notice.

DOSSERT®

TYPE UL-N-AA, ULA-N-45-AA, ULA-N-90-AA

Aluminum U-Bolt Terminal

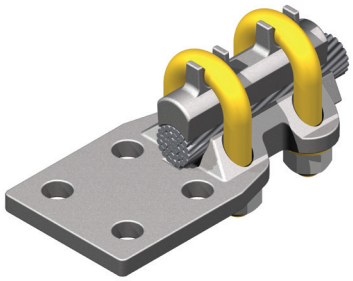

A U-bolt type variable terminal lug for connecting cables to flat bar busses. Designed to operate at cooler than conductor temperatures under maximum load conditions with the largest size cable of the range of cable sizes. Contact pads other than those listed can be promptly furnished to any specified size or drilling.

Material

Aluminum Alloy

Hardware

Aluminum bolts, lockwashers and nuts.

Notes

- For a 900 MCM cable, with a two-hole pad, at a 45° angle, order ULA90-2N-45-AA.
- For a 900 MCM cable, with a two-hole pad, at a 90° angle, order ULA90-2N-90-AA.
- For finished pad on both sides, add "F" to catalog number. EX: ULA90-2NF-90-AA.

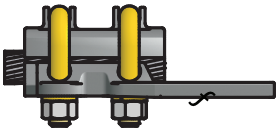

UL-N-AA

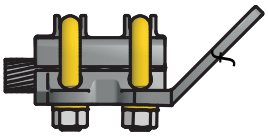

ULA-N-45-AA

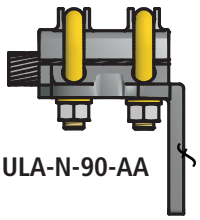

ULA-N-90-AA

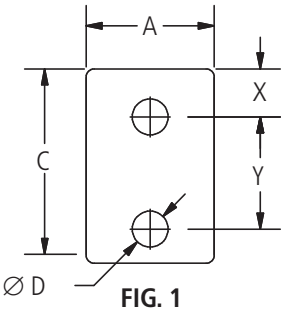

FIG. 1

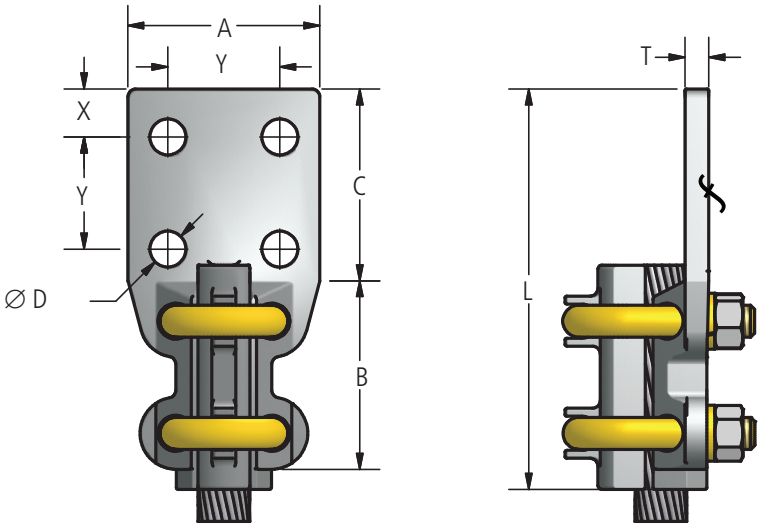

FIG. 2

© 2011, AFL, all rights reserved. PP-3-00502, Revision 6, 1.3.22
Specifications are subject to change without notice.

DOSSERT®

TYPE UL-N-AA, ULA-N-45-AA, ULA-N-90-AA

Aluminum U-Bolt Terminal

Ordering Information

CATALOG NUMBER			CABLE RANGE		FIG. NO.	DIMENSIONS IN INCHES								
STRAIGHT	45 DEGREE	90 DEGREE	MIN	MAX		A	B	C	D	L	T	X	Y	BOLT SIZE
UL13-2N-AA	ULA13-2N-45-AA	ULA13-2N-90-AA	6	#2/0	1	1.50	3.00	3.00	0.56	6.50	0.31	0.63	1.75	1/2
UL13-4N-AA	ULA13-4N-45-AA	ULA13-4N-90-AA	6	#2/0	2	3.00	3.00	3.00	0.56	6.25	0.31	0.63	1.75	1/2
UL21-2-AA	ULA21-2-45-AA	ULA21-2-90-AA	1	#4/0	1	1.25	3.00	2.13	0.44	5.38	0.38	0.50	1.75	1/2
UL21-2N-AA	ULA21-2N-45-AA	ULA21-2N-90-AA	1	#4/0	1	1.50	3.00	3.00	0.56	6.25	0.38	0.63	1.75	1/2
UL21-4N-AA	ULA21-4N-45-AA	ULA21-4N-90-AA	1	#4/0	2	3.00	3.00	3.00	0.56	6.25	0.38	0.63	1.75	1/2
UL21-4N4-AA	ULA21-4N4-45-AA	ULA21-4N4-90-AA	1	#4/0	2	4.00	3.00	4.00	0.56	7.25	0.38	1.13	1.75	1/2
UL30-2N-AA	ULA30-2N-45-AA	ULA30-2N-90-AA	1/0	300	1	1.50	3.25	3.00	0.56	6.50	0.38	0.63	1.75	1/2
UL30-4N-AA	ULA30-4N-45-AA	ULA30-4N-90-AA	1/0	300	2	3.00	3.25	3.00	0.56	6.50	0.38	0.63	1.75	1/2
UL30-4N4-AA	ULA30-4N4-45-AA	ULA30-4N4-90-AA	1/0	300	2	4.00	3.25	4.00	0.56	7.50	0.38	1.13	1.75	1/2
UL50-2N-AA	ULA50-2N-45-AA	ULA50-2N-90-AA	300	500	1	1.75	3.25	3.00	0.56	6.63	0.38	0.63	1.75	1/2
UL50-4N-AA	ULA50-4N-45-AA	ULA50-4N-90-AA	300	500	2	3.00	3.25	3.00	0.56	6.63	0.38	0.63	1.75	1/2
UL50-4N4-AA	ULA50-4N4-45-AA	ULA50-4N4-90-AA	300	500	2	4.00	3.25	4.00	0.56	7.50	0.38	1.13	1.75	1/2
UL60-2N-AA	ULA60-2N-45-AA	ULA60-2N-90-AA	300	600	1	1.75	3.25	3.00	0.56	6.25	0.38	0.63	1.75	1/2
UL90-2N-AA	ULA90-2N-45-AA	ULA90-2N-90-AA	500	900	1	1.75	3.50	3.00	0.56	6.75	0.50	0.63	1.75	1/2
UL90-4N-AA	ULA90-4N-45-AA	ULA90-4N-90-AA	500	900	2	3.00	3.50	3.00	0.56	6.75	0.50	0.63	1.75	1/2
UL90-4N4-AA	ULA90-4N4-45-AA	ULA90-4N4-90-AA	500	900	2	4.00	3.50	4.00	0.56	7.75	0.50	1.13	1.75	1/2
UL100-2N-AA	ULA100-2N-45-AA	ULA100-2N-90-AA	750	1000	1	2.00	3.50	3.00	0.56	6.88	0.50	0.63	1.75	1/2
UL100-4N-AA	ULA100-4N-45-AA	ULA100-4N-90-AA	750	1000	2	3.00	3.50	3.00	0.56	6.88	0.50	0.63	1.75	1/2
UL100-4N4-AA	ULA100-4N4-45-AA	ULA100-4N4-90-AA	750	1000	2	4.00	3.50	4.00	0.56	8.00	0.50	1.13	1.75	1/2
UL127-2N-AA	ULA127-2N-45-AA	ULA127-2N-90-AA	600	1272	1	2.00	3.50	3.00	0.56	6.75	0.63	0.63	1.75	1/2
UL150-2N-AA	ULA150-2N-45-AA	ULA150-2N-90-AA	1000	1500	1	2.00	4.50	3.25	0.56	7.75	0.69	0.63	1.75	5/8
UL150-4N-AA	ULA150-4N-45-AA	ULA150-4N-90-AA	1000	1500	2	3.00	4.50	3.00	0.56	7.75	0.63	0.63	1.75	5/8
UL150-4N4-AA	ULA150-4N4-45-AA	ULA150-4N4-90-AA	1000	1500	2	4.00	4.50	4.00	0.56	8.75	0.63	1.13	1.75	5/8
UL159-4N-AA	ULA159-4N-45-AA	ULA159-4N-90-AA	—	1590	2	3.00	4.50	3.00	0.56	7.75	0.63	0.63	1.75	5/8
UL159-4N4-AA	ULA159-4N4-45-AA	ULA159-4N4-90-AA	—	1590	2	4.00	4.50	4.00	0.56	8.75	0.56	1.13	1.75	5/8
UL200-2N-AA	ULA200-2N-45-AA	ULA200-2N-90-AA	1500	2000	1	2.75	4.50	3.00	0.56	7.75	0.69	0.63	1.75	5/8
UL200-4N-AA	ULA200-4N-45-AA	ULA200-4N-90-AA	1500	2000	2	3.00	4.50	3.00	0.56	7.88	0.69	0.63	1.75	5/8
UL200-4N4-AA	ULA200-4N4-45-AA	ULA200-4N4-90-AA	1500	2000	2	4.00	4.50	4.00	0.56	9.13	0.69	1.13	1.75	5/8
UL200-4S4-AA	ULA200-4S4-45-AA	ULA200-4S4-90-AA	1500	2000	2	4.00	4.50	4.00	0.56	8.75	0.69	1.00	2.00	5/8
UL250-4N-AA	ULA250-4N-45-AA	ULA250-4N-90-AA	2000	2500	2	3.00	4.50	3.00	0.56	7.75	0.75	0.63	1.75	5/8
UL250-4N4-AA	ULA250-4N4-45-AA	ULA250-4N4-90-AA	2000	2500	2	4.00	4.50	4.00	0.56	8.75	0.75	1.13	1.75	5/8

© 2011, AFL, all rights reserved. PP-3-00502, Revision 6, 1.3.22
Specifications are subject to change without notice.

DOSSERT®

TYPE XLW-AA, XLW-90-AA

Expansion Terminal Connector

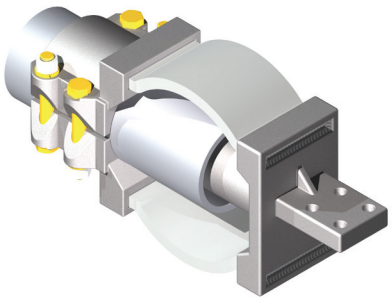

Expansion terminal is designed to compensate for expansion and contraction in bus runs. Pad conforms to NEMA standards.

Material

Aluminum Alloy

Hardware

Aluminum bolts, lockwashers and nuts

Notes

- For an expansion terminal at 90°, add suffix "-90" to catalog number. EX: XLWP125-4N-AA
- To order without alignment guide, add "P" to catalog number. EX: XLWP125-4N-AA
- For schedule 80 pipe, add "E" to catalog number. EX: XLW125E-4N-AA
- For Stainless Steel bolts, lockwashers and Everdur nuts, add "-SSHBN" to catalog number. EX: XLW350-4N4-AA-SSHBN
- For Galvanized Steel Hardware, add "-GS" to catalog number. EX: XLW350-4N4-AA-GS

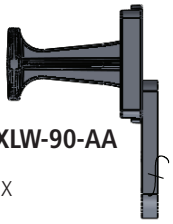

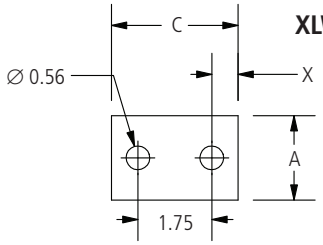

FIG. 1

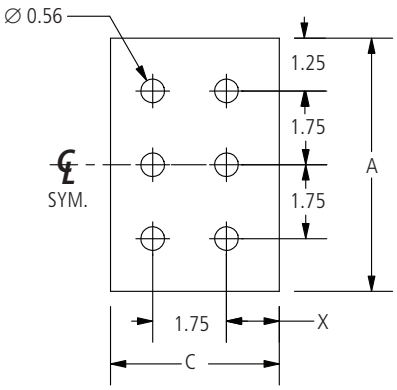

FIG. 3

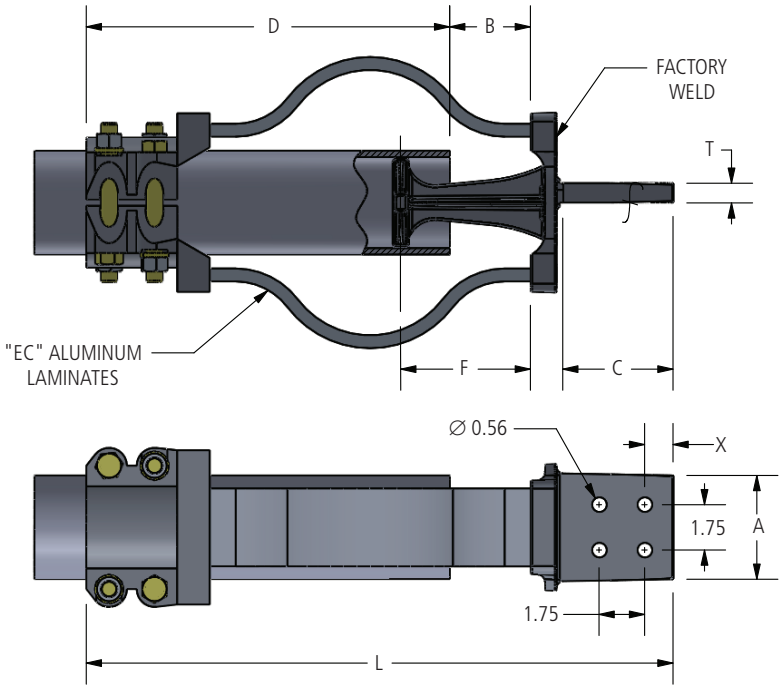

FIG. 2

© 2011, AFL, all rights reserved. PP-3-00595, Revision 4, 12.18.18
Specifications are subject to change without notice.

DOSSERT®

TYPE XLW-AA, XLW-90-AA

Expansion Terminal Connector

Ordering Information

CATALOG NUMBER	FIG. NO.	SPS	DIMENSIONS IN INCHES								BOLT SIZE
			A	B	C	D	F	L	T	X	
XLW100-2N-AA	1	1	2.00	1.50	3.00	7.13	3.50	12.63	0.50	0.63	1/2
XLW100-4N-AA	2	1	3.00	1.50	3.00	7.13	3.50	12.63	0.50	0.63	1/2
XLW125-2N-AA	1	1 1/4	2.00	1.50	3.00	8.25	3.50	13.75	0.50	0.63	1/2
XLW125-4N-AA	2	1 1/4	3.00	1.50	3.00	8.25	3.50	13.75	0.50	0.63	1/2
XLW150-2N-AA	1	1 1/2	2.00	1.50	3.00	8.38	3.50	14.00	0.63	0.63	1/2
XLW150-4N-AA	2	1 1/2	3.00	1.50	3.00	8.38	3.50	14.00	0.63	0.63	1/2
XLW150-4N4-AA	2	1 1/2	4.00	1.50	4.00	8.38	3.50	15.00	0.63	1.13	1/2
XLW200-2N-AA	1	2	2.00	2.50	3.00	9.56	4.50	16.75	0.75	0.63	1/2
XLW200-4N-AA	2	2	3.00	2.50	3.00	9.56	4.50	16.75	0.75	0.63	1/2
XLW200-4N4-AA	2	2	4.00	2.50	4.00	9.56	4.50	17.75	0.75	1.13	1/2
XLW250-2N-AA	1	2 1/2	2.00	2.50	3.00	10.31	4.50	17.50	0.75	0.63	1/2
XLW250-4N-AA	2	2 1/2	3.00	2.50	3.00	10.31	4.50	17.50	0.75	0.63	1/2
XLW250-4N4-AA	2	2 1/2	4.00	2.50	4.00	10.31	4.50	18.50	0.75	1.13	1/2
XLW300-2N-AA	1	3	3.00	2.50	3.00	11.56	4.50	18.75	0.88	0.63	5/8
XLW300-4N-AA	2	3	3.00	2.50	3.00	11.56	4.50	18.75	0.88	0.63	5/8
XLW300-4N4-AA	2	3	4.00	2.50	4.00	11.56	4.50	19.75	0.88	1.13	5/8
XLW350-4N-AA	2	3 1/2	3.00	2.50	3.00	12.56	4.50	20.13	0.88	0.63	5/8
XLW350-4N4-AA	2	3 1/2	4.00	2.50	4.00	12.56	4.50	21.13	0.81	1.13	5/8
XLW350-6N4-AA	3	3 1/2	6.00	2.50	4.00	12.56	4.50	21.13	0.88	1.25	5/8
XLW400-4N-AA	2	4	4.00	2.50	3.00	12.75	4.50	21.75	1.00	0.63	5/8
XLW400-4N4-AA	2	4	4.00	2.50	4.00	12.75	4.50	21.75	1.00	1.13	5/8
XLW400-6N4-AA	3	4	6.00	2.50	4.00	12.75	4.50	21.75	1.00	1.13	5/8
XLW500-4N4-AA	2	5	4.00	2.50	4.00	15.00	4.50	24.00	1.25	1.13	5/8
XLW500-6N4-AA	3	5	6.00	2.50	4.00	15.00	4.50	24.00	1.25	1.25	5/8
XLW600-4N4-AA	2	6	4.00	2.50	4.00	17.00	4.50	26.38	1.38	1.13	5/8
XLW600-6N4-AA	3	6	6.00	2.50	4.00	17.00	4.50	26.38	1.38	1.25	5/8

© 2011, AFL, all rights reserved. PP-3-00595, Revision 4, 12.18.18
Specifications are subject to change without notice.

DOSSERT®

TYPE XLW-90V-AA, XLWO-AA

Expansion Terminal Connector

Expansion terminal is designed to compensate for expansion and contraction in bus runs. Pad conforms to NEMA standards. Dimension "D" shown is for an installation temperature of 68°F(20°C). XLW-90V is the product number for a center-formed pad, XLWO is for an offset pad. Products from factory are for use with Sch. 40 pipe, to order for use with Sch. 80 pipe see notes below.

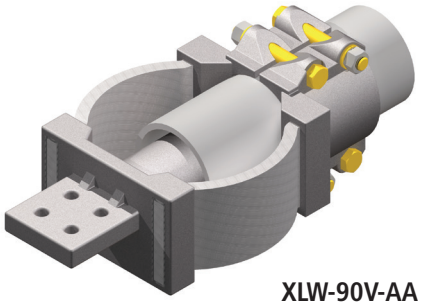

XLW-90V-AA

Material

Aluminum Alloy

Hardware

Yellow anodized aluminum nuts, bolts and lockwashers.

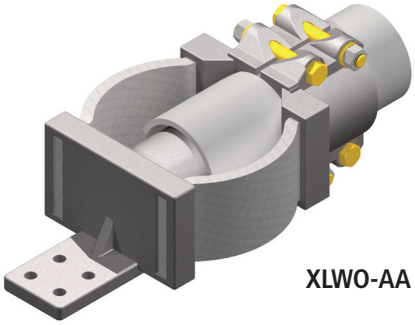

XLWO-AA

Notes

1. Add "P" to catalog number to remove alignment guide.
   EX: XLWP200-4N4-90V-AA or XLWOP200-4N4-AA.

2. Add "E" to the catalog number for extra heavy pipe.
   EX: XLW200E-4N4-90V-AA or XLWO200E-4N4-AA.

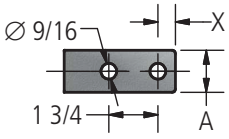

FIG. 1

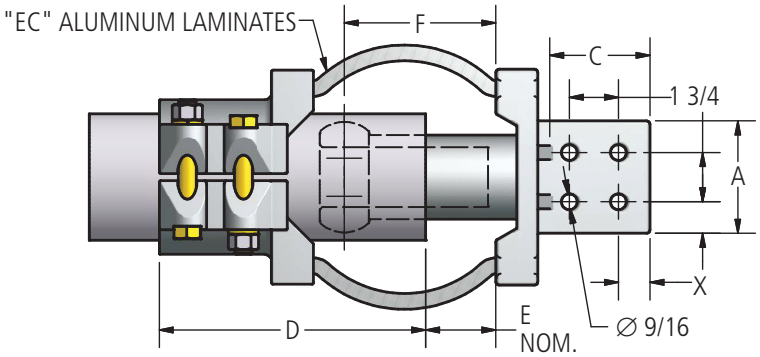

FIG. 2

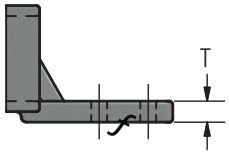

XLWO-AA

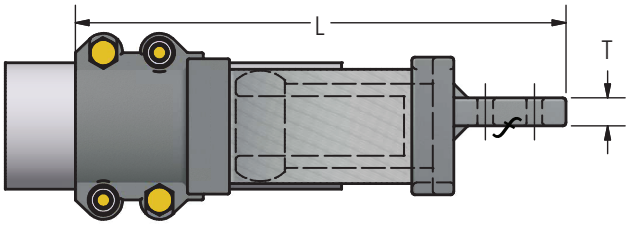

XLW-90V-AA

© 2011, AFL, all rights reserved. PP-3-00594, Revision 1, 7.23.13
Specifications are subject to change without notice.

DOSSERT®

TYPE XLW-90V-AA, XLWO-AA

Expansion Terminal Connector

Ordering Information

CATALOG NUMBER*	CATALOG NUMBER*	SPS	FIG. NO.	DIMENSIONS IN INCHES								
				A	C	D	E	F	L	T	X	BOLT SIZE
XLW100-2N-90V-AA	XLWO100-2N-AA	1	1	2	3	7-1/8	1-1/2	3-1/2	12-5/8	1/2	5/8	1/2
XLW100-4N-90V-AA	XLWO100-4N-AA	1	2	3	3	7-1/8	1-1/2	3-1/2	12-5/8	1/2	5/8	1/2
XLW125-2N-90V-AA	XLWO125-2N-AA	1-1/4	1	2	3	8-1/4	1-1/2	3-1/2	13-3/4	1/2	5/8	1/2
XLW125-4N-90V-AA	XLWO125-4N-AA	1-1/4	2	3	3	8-1/4	1-1/2	3-1/2	13-3/4	1/2	5/8	1/2
XLW150-2N-90V-AA	XLWO150-2N-AA	1-1/2	1	2-1/2	3	8-3/8	1-1/2	3-1/2	14	5/8	5/8	1/2
XLW150-4N-90V-AA	XLWO150-4N-AA	1-1/2	2	3	3	8-3/8	1-1/2	3-1/2	14	5/8	5/8	1/2
XLW150-4N4-90V-AA	XLWO150-4N4-AA	1-1/2	2	4	4	8-3/8	1-1/2	3-1/2	15	5/8	1-1/8	1/2
XLW200-2N-90V-AA	XLWO200-2N-AA	2	1	2-3/4	3	9-9/16	2-1/2	4-1/2	16-3/4	3/4	5/8	1/2
XLW200-4N-90V-AA	XLWO200-4N-AA	2	2	3	3	9-9/16	2-1/2	4-1/2	16-3/4	3/4	5/8	1/2
XLW200-4N4-90V-AA	XLWO200-4N4-AA	2	2	4	4	9-9/16	2-1/2	4-1/2	17-3/4	3/4	1-1/8	1/2
XLW250-2N-90V-AA	XLWO250-2N-AA	2-1/2	1	2-3/4	3	10-5/16	2-1/2	4-1/2	171/2	3/4	5/8	1/2
XLW250-4N-90V-AA	XLWO250-4N-AA	2-1/2	2	3	3	10-5/16	2-1/2	4-1/2	17-1/2	3/4	5/8	1/2
XLW250-4N4-90V-AA	XLWO250-4N4-AA	2-1/2	2	4	4	10-5/16	2-1/2	4-1/2	18-1/2	3/4	1-1/8	1/2
XLW300-4N-90V-AA	XLWO300-4N-AA	3	2	3	3	11-9/16	2-1/2	4-1/2	18-3/4	7/8	5/8	5/8
XLW300-4N4-90V-AA	XLWO300-4N4-AA	3	2	4	4	11-9/16	2-1/2	4-1/2	19-3/4	7/8	1-1/8	5/8
XLW350-4N-90V-AA	XLWO350-4N-AA	3-1/2	2	3	3	12-9/16	2-1/2	4-1/2	20-1/8	7/8	5/8	5/8
XLW350-4N4-90V-AA	XLWO350-4N4-AA	3-1/2	2	4	4	12-9/16	2-1/2	4-1/2	21-1/8	7/8	1-1/8	5/8
XLW400-4N4-90V-AA	XLWO400-4N4-AA	4	2	4	4	12-3/4	2-1/2	4-1/2	21-3/4	1	1-1/8	5/8
XLW500-4N4-90V-AA	XLWO500-4N4-AA	5	2	4	4	15	2-1/2	4-1/2	24	1-1/4	1-1/8	5/8
XLW600-4N4-90V-AA	XLWO600-4N4-AA	6	2	4	4	17	2-1/2	4-1/2	26-3/8	1-3/8	1-1/8	5/8

* See Notes for SCH80 Ordering Information.

© 2011, AFL, all rights reserved. PP-3-00594, Revision 1, 7.23.13
Specifications are subject to change without notice.

DOSSERT®

TYPE BM SERIES

Bi-Metal Transition Plate

The transition plate is for connecting copper and aluminum terminals together.

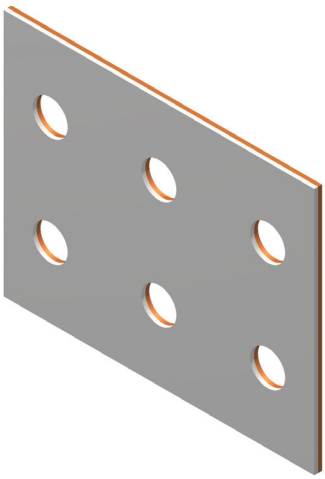

Material

Copper Clad Aluminum

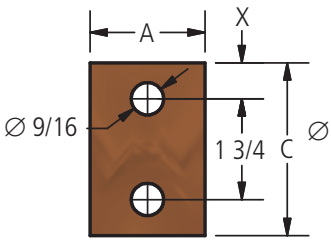

FIG. 1

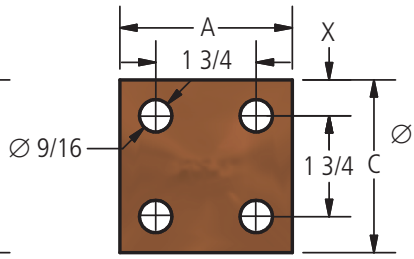

FIG. 2

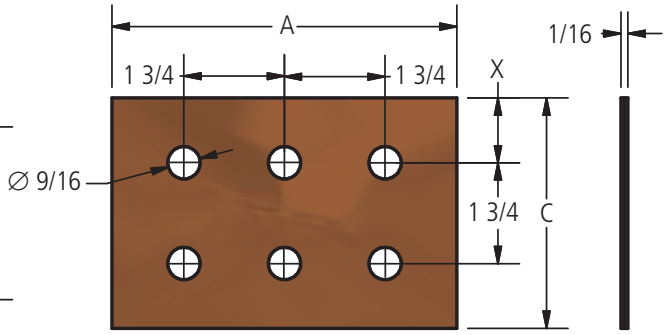

FIG. 3

Ordering Information

CATALOG NUMBER	FIG. NO.	DIMENSIONS IN INCHES		
		A	C	X
BM-1 1/2N	1	1 1/2	3	5/8
BM-2N	1	2	3	5/8
BM 2 3/4 X 5 1/4-2N	1	2 3/4	5 1/4	3/4
BM-3N	2	3	3	5/8
BM-4N4	2	4	4	1 1/8
BM-5N4	3	5	4	1 1/8
BM-6N4	3	6	4	1 1/8

© 2011, AFL, all rights reserved. PP-3-00249, Revision 1, 7.23.13
Specifications are subject to change without notice.

DOSSERT®

TYPE 1706 SERIES

Bus Vibration Dampers

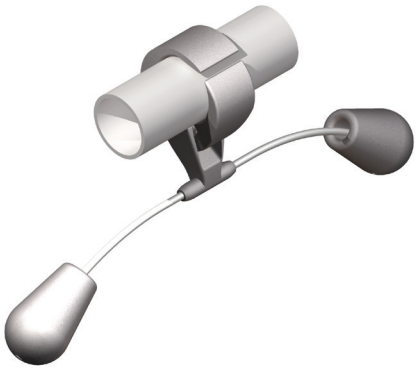

Tubular bus dampers are designed to control Aeolian or wind-induced vibration in long bus spans; the dampers have been proven both in the laboratory and in field service to be the most effective method of controlling tubular bus vibration. The dampers are faster and easier to install than the old method of inserting "scrap" cable into the tubular bus runs. Also, the dampers find applications for correcting a vibration problems in existing substations.

Determine catalog number based on the bus conductor size being used. To order a bus vibration damper for 2 1/2" bus conductor, the complete catalog number is 1706-288.

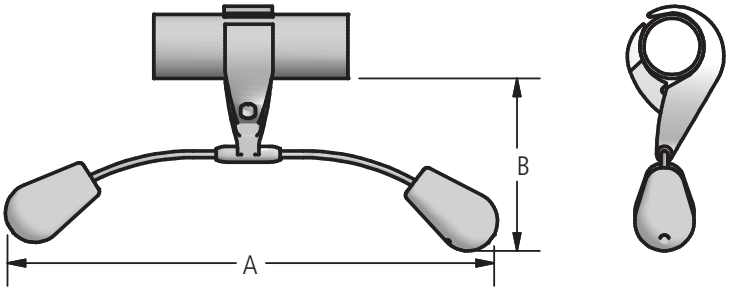

FIG. 1

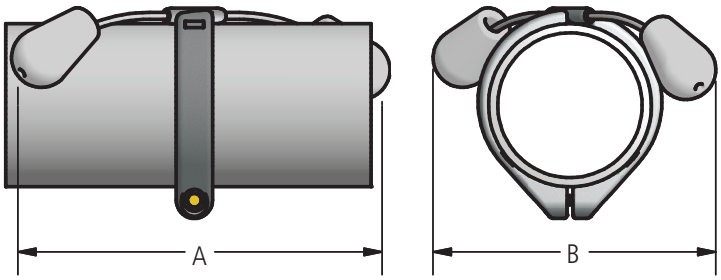

FIG. 2

Ordering Information

CATALOG NUMBER	SPS	FIG. NO.	DIMENSIONS IN INCHES		
			A	B	BOLT SIZE
1706-190	1-1/2	1	29.5	9.9	5/8-11
1706-238	2	1	29.5	9.9	5/8-11
1706-288	2-1/2	1	29.6	10.2	5/8-11
1706-350	3	1	29.6	10.3	3/4-10
1706-008	3	2	28.0	12.6	1/2-13
1706-009	3-1/2	2	27.8	13.2	1/2-13
1706-010	4	2	27.6	13.6	1/2-13
1706-012	5	2	26.8	15.4	1/2-13
1706-013	6	2	26.2	17.8	1/2-13
1706-014	8 O.D.	2	24.8	18.6	1/2-13

© 2011, AFL, all rights reserved. PP-3-00161, Revision 1, 7.23.13
Specifications are subject to change without notice.

DOSSERT®

TYPE 1706

Bus Vibration Dampers

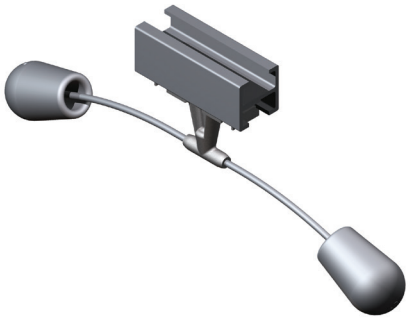

Vibration dampers for universal angle bus conductor (UABC) and integral web channel bus conductor (IWCB) are specifically designed to control Aeolian or wind-induced vibration in long bus spans. The dampers provide a fast, economical method of damping vibration. Installation is easy; the IWCB damper clamps to the bus by means of a bolt and clamp nut while the UABC damper bolts directly to the bus.

Determine catalog number based on the bus conductor size being used. Ex: A bus vibration damper for 4"x4" IWCB, the complete catalog number is: 1706-129.

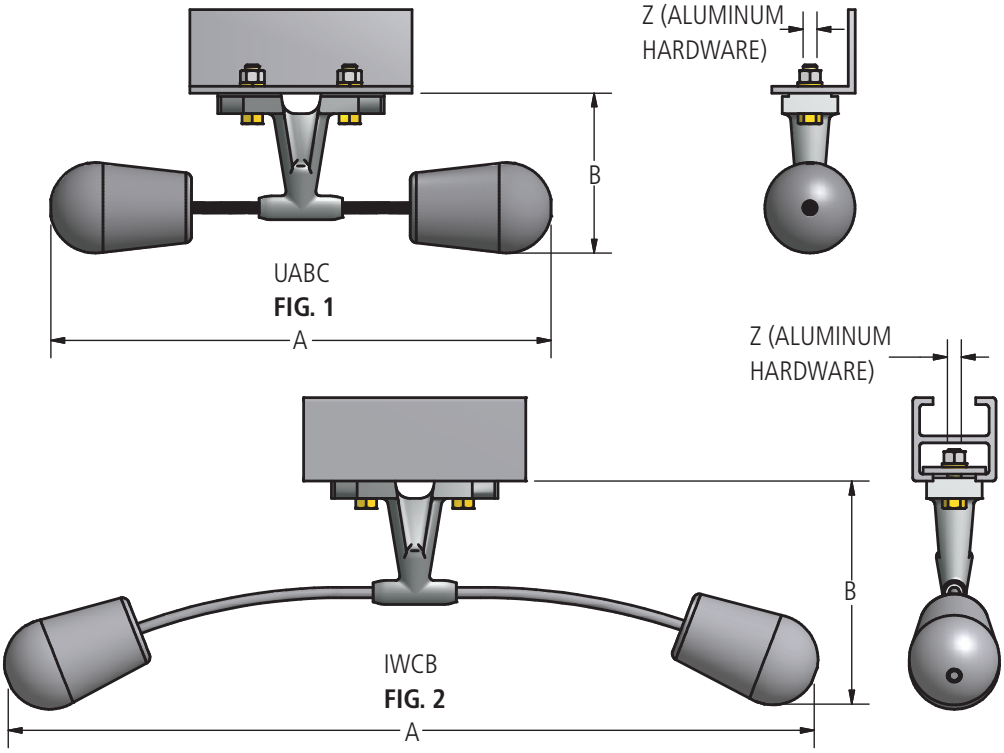

Ordering Information

CONDUCTOR SIZE IN	FIG. NO.	CATALOG NUMBER	DIMENSIONS IN INCHES		
			A	B	BOLT SIZE
3-1/4 x 3-1/4 Thru 5 x 5 UABC	1	1706-123	15.5	5.7	1/2-13
4 x 4 Thru 9 x 9 IWCB	2	1706-129	29	10.1	1/2-13

© 2011, AFL, all rights reserved. PP-3-00161, Revision 1, 7.23.13
Specifications are subject to change without notice.

230 kV Aluminum Bolted Connectors

DOSSERT®