


AFL

DOSSERT®

Substation Power Connectors and Accessories

Substation Power Connectors and Accessories

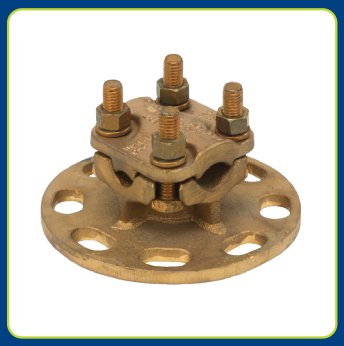





AFL

www.AFLglobal.com

COMPANY WITH
QUALITY SYSTEM
CERTIFIED BY DNV GL
= ISO 9001 =

Table of Contents

Pictorial Index ix
General Information 1

Bronze

Bronze Connectors Table of Contents 21
Pictorial Index 23

Bronze Bus Supports

Type AD 31
Type CAP 33
Type CBP 34
Type CS 35
Type CVSP 36
Type HSSB, HSSC 37
Type PA, PAP 38
Type PB, PBP 39
Type PL 40
Type PLC 41
Type PSC 42
Type PSD, PSD-U 43
Type PSRE 44
Type PSS, PSS-CH 45
Type PSSR, PSSR-CH 46
Type PSV 47
Type SBC 48
Type SBS 49
Type SAH, SAHD, SHH, SHHD 50
Type SAV, SAVD, SHVD 51
Type SAVS, SHVS 52
Type SSHH, SSHHD 53
Type XBC 54

Bronze Couplers

Type CCV-S 55
Type CP 56
Type HC, HC-A 57
Type RP 58
Type RPCV-S 60
Type UK, UKT 61
Type UKR 62
Type UP2K, UP4K 63
Type UPK 65

Bronze Braided or Laminated Expansion

Type CF-N (NEMA Pad Sizes) 66
Type CF 69
Type CFC 71
Type LX 72
Type XC, XCP, XBP 73
Type XL 75
Type XTP 76
Type XTS 78
Type XTSS, XTSS-N 80

Bronze Elbows Tee & Vee Connectors

Type BCV-S 81
Type BP, BPA-75, BPA-80 82
Type BPCV-S, BP2CV-S 84
Type BPE 86
Type EP 88
Type PSK, PSKS 89
Type PX 90
Type U2T, UUTT 91
Type UP2T 93
Type UPT 95
Type UT, UUT 97
Type UTS 99
Type VB 100
Type VBPS 101

Bronze Parallel, Cross, and Bar Taps

Type DGF, DGG 102
Type DGM, DGN 103
Type DSU, DSUS 104
Type DSUN 105
Type ES, ESS, ESSN 106
Type GPEX 107
Type GTV 108
Type GTX 110
Type PC 111
Type Q2L, Q2L-E 114
Type QL, QL-E 115
Type TL, TL-E, T2L, T2L-E 116
Type TRV 117
Type UD 118

© 2011, AFL, all rights reserved. Revision 14, 11.21.2024
Specifications are subject to change without notice.

Table of Contents

Bronze Parallel, Cross, and Bar Taps

Type UDV . . . 119
Type UM . . . 120
Type UP, UP-3 . . . 121
Type WC . . . 122

Bronze Connectors for Flat Bar

Type BS . . . 123
Type DH, DA . . . 124
Type HAF, H2AF, H3AF, H4AF . . . 125
Type HHF, H2HF, H3HF, H4HF . . . 127
Type HSS . . . 129

Bronze Grounding Connectors and Everdur Harware

Type EB . . . 130
Type EN, EW, ELW, EILW . . . 131
Type G110, G111, G114, G115 . . . 132
Type GA, GAA . . . 133
Type GAM . . . 134
Type GB, GBB . . . 135
Type GCF, GCG . . . 136
Type GD . . . 137
Type GF, GFM . . . 138
Type GG . . . 139
Type GH . . . 140
Type GK . . . 141
Type GL . . . 143
Type GPC . . . 144
Type GPF . . . 146
Type GPH-N . . . 147
Type GPH . . . 148
Type GR . . . 149
Type GS . . . 150
Type GW . . . 151
Type GX . . . 153
Type GZ . . . 154
Type MTRC, MTR2C, MTR3C . . . 156
Type Q2TE, Q3TE, Q4TE . . . 157
Type Q2TS, Q3TS, Q4TS . . . 159
Type TGC . . . 161

Bronze Stud Connectors

Type HSC, HS2C, HS3C . . . 162
Type HSC, HSC-90 . . . 164
Type NP, NF . . . 165
Type SCX, S2CX . . . 166
Type SP, SP-90 . . . 168
Type SX-A, SX-A-90 . . . 169
Type SX, SX-90, SXP . . . 170
Type US, U2S, US-90, U2S-90 . . . 172

Bronze Spacers

Type CASV . . . 174

Bronze Dead End Clamps

Type UD2E, UD2E-PG . . . 175

Bronze End Caps

Type CI, CI-E, CX . . . 176

Bronze Terminals, Taps

Type CFT . . . 177
Type CFTV-S . . . 178
Type D . . . 179
Type D2 . . . 180
Type HHL, HHL-A . . . 181
Type HL, HLA-45, HLA-90 . . . 183
Type HL, H2L, H3L, H4L . . . 185
Type HLB, H2LB . . . 187
Type HLS, HLSC . . . 189
Type PFTS . . . 190
Type Q2LB . . . 192
Type QLB, QLLB . . . 193
Type SCB-90H, SCB-90V . . . 195
Type SCB-F . . . 196
Type T2CVH, T2CVHA-45, T2CVHA-90 . . . 200
Type TCVH, TCVHA-30, TCVHA-45, TCVHA-90 . . . 202
Type TCX . . . 204
Type TP, TPA-30, TPA-45, TPA-60, TPA-90 . . . 205
Type TPC . . . 207
Type UL-90H . . . 208
Type UL-90V . . . 209
Type UL, U2L . . . 210
Type ULB, U2LB . . . 212
Type ULI, UULI . . . 214

© 2011, AFL, all rights reserved. Revision 14, 11.21.2024
Specifications are subject to change without notice.

Table of Contents

Bronze Compression

Bronze Compression Table of Contents 217
Bronze Compression Pictorial Index 218

Bronze Compression Connectors

Type BC2KT 219
Type BCKT 220
Type CST 222
Type CSTF 224
Type CSX 225
Type DPC-T 226
Type DPC-SH1, DPC-SH2, DPC-SH-90 227
Type DPCP, DPCP-T 229
Type DPL, DPLA-45, DPLA-90 230
Type DPLE-N 233
Type DPLS 235
Type DPR 238
Type LCA 240
Type LCAE-N 241
Bronze Installation Tool Reference 242

230 kV Aluminum Bolted

230 kV Bolted Table of Contents 245
Pictorial Index 247

Bolted Bus Supports

Type 16300, 16500, 16700 251
Type 31400 252
Type CBP-AA 253
Type CSD-AA 254
Type CSP-AA, C2SP-AA 255
Type CVSP-AA 256
Type PB-AA, PBP-AA 257
Type PL-AA 258
Type PLH-AA 259
Type PSC-AA 260
Type PSD-AA, PSD-CH-AA 261
Type PSDC-AA 263
Type PSDCS-AA 264
Type PSG-AA 265
Type PSRE-AA 266
Type PSS-AA, PSS-CH-AA 267
Type PSSR-AA, PSSR-CH-AA 269
Type PSU-AA 270
Type PSV-AA 271
Type SAH-AA, SHH-AA 272
Type SAV-AA, SHV-AA 273
Type XBC-AA 275
Type XBCW-AA 276

Bolted Couplers

Type BCX-AA 277
Type CCV-AA 278
Type CP-AA 279
Type RCV-AA 280
Type RP-AA 281
Type RPCV-AA 282
Type UK-AA 284
Type UKR-AA 285
Type UPK-AA 286
Type XCW-AA 287

Bolted Corona Bells

Type CI-AA 288
Type 16200 289
Type CX-AA 290

Bolted Dead End Clamps

Type DEC-AA, DEC-G-AA 291
Type SEC-A-2U-AA 292
Type SEC-AA, SEC-P-AA 293

Bolted Elbows

Type EP-AA, EP-30-AA, EP-45-AA, EP-60-AA 294

Bolted Bar Clamps and Spacers

Type BS-AA 295
Type DA-AA 296
Type DH-AA 297

Bolted Ground Clamps

Type GA-AA, GAA-AA 298
Type GD-AA 299
Type GF-AA 300
Type GPC-AA 301
Type GS-AA 303
Type GW-AA 304
Type GCHV-AA 305
Type GPH-AA 306
Type GPH-N-AA 307

© 2011, AFL, all rights reserved. Revision 14, 11.21.2024
Specifications are subject to change without notice.

Table of Contents

Bolted Parallel Clamps

Type AC, ACA . . . 308
Type AC100-AA . . . 310
Type PC-AA . . . 311
Type TRV-AA . . . 312
Series 390 and 490 Distribution Parallel Groove Clamps . . . 313
Series 480 Center Bolt Clamps . . . 314
Series 580 U-Bolt Clamps . . . 315
Type UD-AA . . . 316

230 kV Aluminum Bolted

Bolted Stud Connectors

Type SCB-F-N-AA . . . 317
Type SCV-AA . . . 319
Type SCX-AA, S2CX-AA . . . 321
Type SP-AA . . . 322
Type SX-AA, SX-90-AA . . . 323
Type SXLW-SI-AA . . . 325

Bolted Tee and Vee Connectors

Type BAP-AA . . . 326
Type BCV-AA . . . 328
Type BP-AA, BPA-75-AA, BPA-80-AA . . . 330
Type BPCV-AA, BP2CV-AA . . . 332
Type PFTS-AA . . . 335
Type U2T-AA, UUTT-AA . . . 337
Type UPT-AA . . . 339
Type UT-AA, UUT-AA . . . 341
Type VBP-20-AA, VBP-30-AA . . . 344
Type CFTL-AA . . . 346

Bolted Cable Spacers

Type CASV-AA . . . 347
Type CASV-N-AA, CASV-N-90-AA . . . 349

Bolted Terminal Connectors

Type CFTV-AA . . . 351
Type T3CV-AA . . . 353
Type T2CV-AA, T2CVA-30-AA, T2CVA-45-AA, T2CVA-90-AA . . . 355
Type TCV-N-AA, TCVA-15-AA, TCVA-30-AA, TCVA-45-AA, TCVA-90-AA . . . 359
Type TCX-AA . . . 361
Type TP-AA, TPA-30-AA, TPA-45-AA, TPA-60-AA, TPA-90-AA . . . 363
Type TPC-AA . . . 365
Type U2L-AA, U2LA-45-AA, U2LA-90-AA . . . 367
Type UL-AA, ULA-45-AA, ULA-90-AA . . . 368
Type XLW-AA . . . 370
Type XLW-90V-AA, XLWO-AA . . . 372
Type BM Series . . . 374

Bolted Vibration Dampers

Type 1706 Series . . . 375

230 kV Aluminum Welded

230 kV Welded Table of Contents . . . 377
Pictorial Index . . . 379

Welded Bus Supports

Type HPS-AA, HPS-CH-AA . . . 381
Type PLHS-AA, PLHS-CH-AA . . . 383
Type PLHSO-AA . . . 384
Type WPS-AA . . . 385
Type WPSO-AA . . . 387
Type WPSSL-AA . . . 388
Type WPSV-AA . . . 389
Type WXBC-AA . . . 390

Welded Couplers

Type 14700 . . . 392
Type 15100 . . . 394
Type WS-AA, WS-E-AA . . . 396
Type WSXL-SI-AA . . . 397
Type WWC-AA, WWC-E-AA . . . 398
Type WWCR-AA, WWCR-E-AA . . . 399
Type WWSC-AA . . . 400
Type XWWC-AA, XWWC-E-AA . . . 401
Type XWWCT-AA . . . 402

Welded End Bells

Type WCX-AA . . . 403
Type WCI-AA, WCI-E-AA . . . 404
Type WP-AA, WP-E-AA . . . 405

Welded Elbows

Type WEPI-AA, WEPI-30-AA, WEPI-45-AA, WEPI-60-AA . . . 406

Welded Pipe Taps and Extensions

Type WGPH-AA . . . 408
Type WTC-AA . . . 409
Type WTF-AA . . . 410

© 2011, AFL, all rights reserved. Revision 14, 11.21.2024
Specifications are subject to change without notice.

Table of Contents

230 kV Aluminum Welded

Welded Tee and Vee Connectors
Type 1000 Series . . . 411
Type A-Frame Connectors, 14500 & 14600 Series . . . 413
Type WT-AA, WTA-75-AA, WTA-80-AA . . . 415
Type WVBP-20-AA, WVBP-30-AA . . . 417

Welded Terminal Connectors
Type 15950, 15960 Series . . . 419
Type 34300 . . . 420
Type WP2C-N-AA, WP2CA-N-45-AA, WP2CA-N-90-AA . . . 421
Type WPC-N-AA, WPCA-N-45-AA, WPCA-N-90-AA . . . 424
Type WTP-N-AA . . . 427
Type WTPA-N-45-AA . . . 429
Type WTPA-N-90-AA . . . 431
Type WTPC-N-AA . . . 433
Type WTPI-N-AA, WTPIA-N-45-AA, WTPIA-N-90-AA . . . 434
Type WTPIC-N-AA . . . 436
Type WTPO-N-AA, WTPOA-N-45-AA, WTPOA-N-90-AA, . . . 437
Type WTPOC-AA . . . 440
Type WWSC-AA . . . 441
Type WXL-90V-AA . . . 442
Type WXL-AA, WXL-E-AA . . . 444
Type WXLO-AA, WXLO-E-AA . . . 446

230 kV Aluminum Compression

230 kV Compression Table of Contents . . . 449
Pictorial Index . . . 450

Compression Connectors
Type 2600, 2700 Series . . . 451
Type 2800 Series . . . 452
Type 2930 Series . . . 453
Type 3400 Series . . . 454
Type 5000 Series . . . 455
Type 5400 Series . . . 458
Type S5600, S5100 Series . . . 460
Type S5600-45, S5800 Series . . . 466
Type DP2L-V-EC . . . 471

345 kV and 500 kV

z 345 kV and 500 kV Table of Contents . . . 473
Pictorial Index . . . 475

Bus Supports
Type PSD-V-AA, PSD-V-CH-AA . . . 479
Type HPS-HV-AA . . . 480
Type WPS-V-AA, WPS-V-CH-AA . . . 481
Type WPSSL-V-AA . . . 483
Type 34700 EHV . . . 485
Type WXBC-V-AA . . . 486
Type WXBC-HV-AA . . . 487
Type C2SWB-V-AA . . . 488
Type 15700 EHV . . . 491
Type 32800 EHV . . . 492
Type 35700 EHV . . . 492
Type 33800 EHV . . . 494

Couplers
Type CP-V-AA . . . 495
Type CPV-V-AA . . . 496
Type WWC-AA, WWC-E-AA . . . 497
Type WWCR-V-AA . . . 498
Type XWWC-V-AA, XWWC-HV-AA . . . 498
Type XWWCT-HV-AA . . . 500
Type WRP3C-8-V-AA . . . 501
Type 35300 EHV . . . 502

Vibration Dampers
Type 1705-EHV, 1706-EHV . . . 503

Corona Bells
Type CXBHV-AA, CXWHV-AA . . . 504

Tee Connectors
Type BAP-V-AA . . . 505
Type PFTS-V-AA . . . 506
Type BPA-75-V-AA . . . 508
Type WT-AA, WTA-75-AA, WTA-80-AA . . . 509
Type WTC-V-AA, WTF-V-AA . . . 512
Type WVBP-20-V-AA, WVBP-30-V-AA . . . 513
Type BPC-V-AA . . . 515
Type CFT-V-AA . . . 516
Type VBP-30-V-AA . . . 517

© 2011, AFL, all rights reserved. Revision 14, 11.21.2024
Specifications are subject to change without notice.

Table of Contents

345 kV and 500 kV

Tee Connectors

Type 1000-EHV . . . 518
Type WT3C-8-V-AA . . . 520
Type 3500-EHV . . . 521
Type BC-V-AA . . . 523
Type 34900-EHV . . . 525
Type 34992-EHV, 34993-EHV . . . 528
Type 34996-EHV, 34997-EHV . . . 531

A-Frames

Type A-Frame Assemblies . . . 534

Connectors

Type 15100-EHV . . . 535
Type 14700-EHV . . . 536

Terminal Connectors

Type TP-4N4-V-AA, TPA-4N4-90-V-AA . . . 537
Type WTPC-4N4-V-AA . . . 539
Type WTPI-V-AA, WTPIA-90-V-AA . . . 540
Type WTPIC-V-AA, WTPIC-E-V-AA . . . 542
Type WXL-V-AA, WXL-HV-AA . . . 543
Type TC-V-AA, T2C-V-AA . . . 544
Type WPC-V-AA, WP2C-V-AA . . . 546
Type WPCA-45-V-AA, WP2CA-45-V-AA . . . 549
Type 34200E-EHV . . . 551
Type 34300-EHV . . . 552
Type APTV-V-AA . . . 553
Type APT-V-AA . . . 554
Type TWTC-4N4-8-V-AA . . . 555
Type 34994-EHV, 34995E-EHV . . . 556
Type 34999E-EHV . . . 559
Type 33900, 34000 INLINE . . . 562
Type 38900-EHV . . . 564

Elbows

Type WEPI-AA, WEPI-30-AA, WEPI-45-AA, WEPI-60-AA . . . 565
Type 35400, 35500 . . . 567

Ground Jumpers

Type WGPHV-AA . . . 568
Type 34600-EHV . . . 569
Type 34650-EHV . . . 570
Type 34620-EHV . . . 571

345 kV and 500 kV

Spacer Clamps

Type 1800-EHV . . . 572
Type CAS-V-AA . . . 573
Type CAS-N-V-AA, CAS-N-90-V-AA . . . 576
Type 38100-EHV . . . 579
Type 38400-EHV, 38500-EHV . . . 580
Type 38300-EHV . . . 581

Hardware Shields

Type CSBE-V-AA, 4040-EHV, 6040-EHV . . . 582

Parallel Clamps

Type PC-V-AA . . . 583
Type 35600-EHV . . . 585

Stud Connector

Type SCB-F-V-AA . . . 586

Compression Connectors

Type 2800-EHV, 5300-EHV . . . 587
Type 2900-EHV . . . 588
Type 5400 . . . 589
Type 5500 . . . 590
Type 5000-EHV . . . 592
Type 2500-EHV . . . 593
Type 2600, 2700 . . . 594
Type 3400-EHV . . . 595
Type S5600-EHV, S5100-EHV . . . 596
Type S5600-45-EHV, S5800-EHV . . . 599
Type DP2L-V-EC . . . 604

765 kV

765 kV Table of Contents . . . 605
Pictorial Index . . . 607

Bus Supports

Type B6998 Series . . . 609
Type B7107 Series . . . 610
Type B7582-A Series . . . 611
Type C7009 Series . . . 612

Couplers

Type B7070 Series . . . 613
Type WWC-AA, WWC-E-AA . . . 614

© 2011, AFL, all rights reserved. Revision 14, 11.21.2024
Specifications are subject to change without notice.

Table of Contents

765 kV

Corona Bells

Type 34443, CXBV600 Series 615

Tee Connectors

Type BAC-EHV-AA 616
Type BCW-EHV-AA 617
Type B7568-A Series 618
Type B7071 Series 619
Type B7072 Series 620
Type B7095 Series 621
Type B7006 Series 622
Type B7875 Series 623
Type B7096-A Series 624
Type B7566, B7565 Series 625
Type B7876, B7882 Series 626
Type WT-EHV-AA 627
Type WRP2CA-20-EHV-AA, WRP2CA-45-EHV-AA 628

Terminal Connectors

Type WPC-4S4-AA-WH, WPCA-4S4-90-AA-WH 629
Type WPCA-20-AA-WH, WPCA-45-AA-WH, WPCA-75-AA-WH 630
Type WPCA-15L-AA-WH, WPCA-15R-AA-WH,
WPCA-15L-20-AA-WH, WPCA-15R-20-AA-WH 631
Type B7094, B7567 Series 632
Type B7001 Series 633
Type WP2CA-45-EHV-AA 634
Type B7583-A Series 635
Type B7878-A Series 636

Ground Stud

Type 34640-EHV Series 637

Spacer Clamps

Type C6999-A, B7073 Series 638

Vibration Damper

Type 1705, B7384 Series 639

Stud Connector

Type B7004-A Series 640
Type B7074-A Series 641
Type B7108-A Series 642
Type B7879-A, B7880 Series 643

Bus Conductors

Bus Conductors Table of Contents 645
Benefits of Aluminum Bus Conductors 647
Alloys and Tempers 647
Special Finishes and Packaging 647
Factors to Consider When Selecting a Bus Conductor 647
Frequently Asked Questions 648
Bus Packaging Options 649
Seamless Bus Pipe 650
Seamless Bus Tube 652
Rectangular Bar—Sharp Corners 654
Rectangular Bar—Rounded Corners 655
Integral Web Bus Conductor (IWBC) 658
Universal Angle Bus Conductor (UABC) 660
Mechanical Properties of Aluminum Bus Conductors 662
Bending and Forming 663
Deflection Values – Schedule 40 Aluminum Pipe 664
Deflection Values – Schedule 80 Aluminum Pipe 665
Welding Aluminum Bus to Aluminum Connectors 666
General Welding Specifications—Tubular Aluminum Bus Conductor 667

Bus Dampers

Bus Dampers Table of Contents 669
Bus Vibration 671
Universal Angle Bus Conductor (UABC) 672
Integral Web Bus Conductor (IWBC) 672
Damper Spacing—Rigid Bus 673
Recommended Sizes of ACSR to be Inserted in Tubular Bus
to Prevent Vibration 674
Type 1706 Series Bus Vibration Dampers 675
Bus Vibration Dampers—Tube 677
External Bus Vibration Damper for Tubular Bus 678
Bus Vibration Test Data 679

Compounds

Compounds Table of Contents 681
Compounds Photo Index 682
AFL No. 2 Electrical Joint Compound (No. 2 EJC) 683
Alnox® Electrical Joint Compound 684
AFL Filler Compound 685
HiTemp® Universal Compound (HiTUC) 686

© 2011, AFL, all rights reserved. Revision 14, 11.21.2024
Specifications are subject to change without notice.

© 2011, AFL, all rights reserved. Revision 14, 11.21.2024
Specifications are subject to change without notice.

Bronze Bus Supports

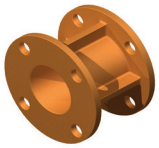	AD SERIES PG. 31
	CAP SERIES PG. 33
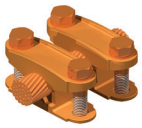	CBP SERIES PG. 34
	CS SERIES PG. 35
	CVSP SERIES PG. 36
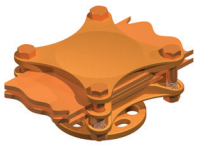	HSSB SERIES PG. 37
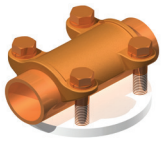	PA SERIES PG. 38
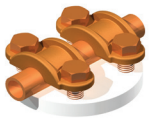	PB SERIES PG. 39
	PL SERIES PG. 40
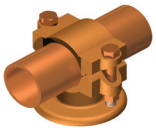	PLC SERIES PG. 41
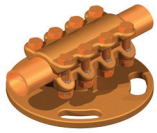	PSC SERIES PG. 42
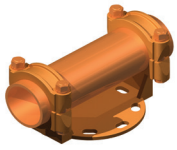	PSD SERIES PG. 43
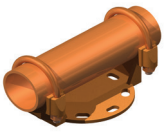	PSD-U SERIES PG. 43
	PSRE SERIES PG. 44
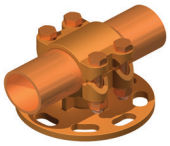	PSS SERIES PG. 45
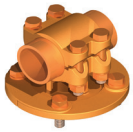	PSSR SERIES PG. 46
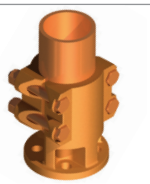	PSV SERIES PG. 47
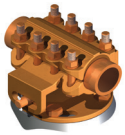	SBC SERIES PG. 48
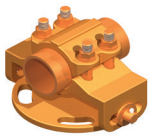	SBS SERIES PG. 49
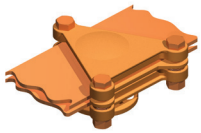	SAH SERIES PG. 50
	SHH SERIES PG. 50
	SAV SERIES PG. 51
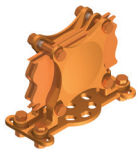	SHV SERIES PG. 51
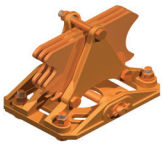	SAVS SERIES PG. 52
	SHVS SERIES PG. 52
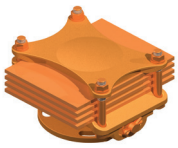	SSHH SERIES PG. 53
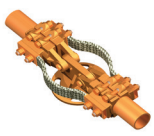	XBC SERIES PG. 54

© 2011, AFL, all rights reserved. Revision 11.21.2024
Specifications are subject to change without notice.

Pictorial Index

Bronze Couplers

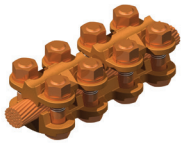	CCV-S SERIES PG. 55
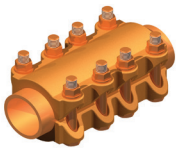	CP SERIES PG. 56
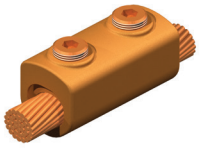	HC SERIES PG. 57
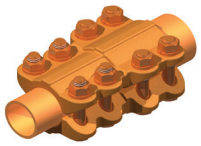	RP SERIES PG. 58
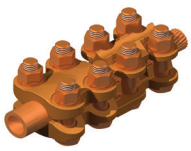	RPCV-S SERIES PG. 60
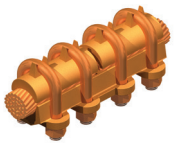	UK SERIES PG. 61
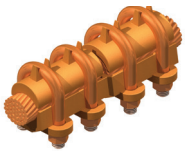	UKR SERIES PG. 62
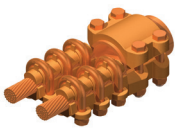	UP2K SERIES PG. 63
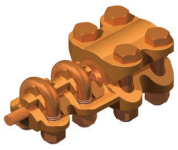	UPK SERIES PG. 65

Bronze Braided or Laminated Expansion

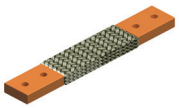	CF-N SERIES PG. 66
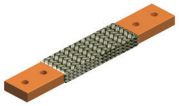	CF SERIES PG. 69
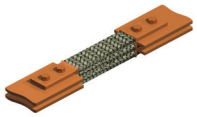	CFC SERIES PG. 71
	LX SERIES PG. 72
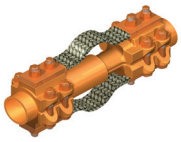	XC SERIES PG. 73
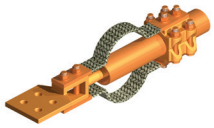	XL SERIES PG. 75
	XTP SERIES PG. 76
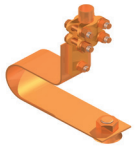	XTS SERIES PG. 78
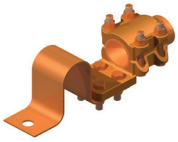	XTSS SERIES PG. 80

Bronze Elbows, Tee and Vee Connectors

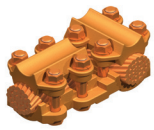	BCV-S SERIES PG. 81
	BP SERIES PG. 82
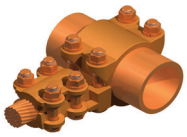	BPCV-S SERIES PG. 84
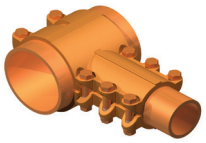	BPE SERIES PG. 86
	EP SERIES PG. 88
	PSK SERIES PG. 89
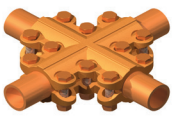	PX SERIES PG. 90
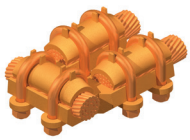	U2T SERIES PG. 91
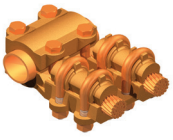	UP2T SERIES PG. 93
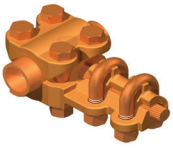	UPT SERIES PG. 95

© 2011, AFL, all rights reserved. Revision 11.21.2024
Specifications are subject to change without notice.

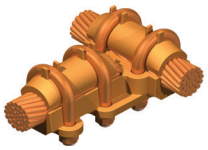	UT SERIES PG. 97
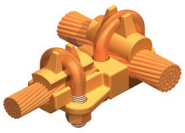	UTS SERIES PG. 99
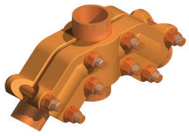	VB SERIES PG. 100
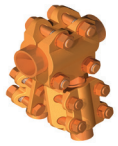	VBPS SERIES PG. 101

Bronze Parallel, Cross, and Bar Taps

	DGF SERIES PG. 102
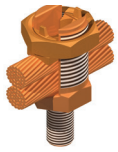	DGM SERIES PG. 103
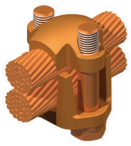	DSU SERIES PG. 104
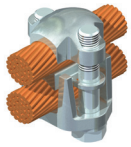	DSUN SERIES PG. 105
	ES SERIES PG. 106
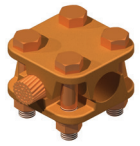	GPEX SERIES PG. 107
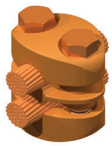	GTV SERIES PG. 108
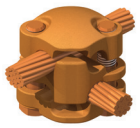	GTX SERIES PG. 110
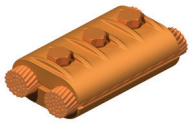	PC SERIES PG. 111
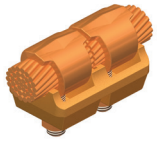	Q2L SERIES PG. 114
	QL SERIES PG. 115
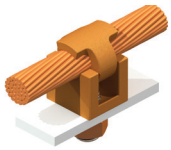	TL SERIES PG. 116
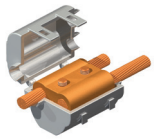	TRV SERIES PG. 117
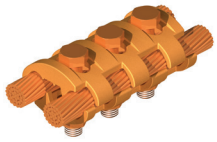	UD SERIES PG. 118
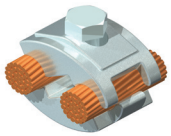	UDV SERIES PG. 119
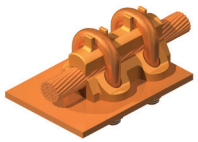	UM SERIES PG. 120
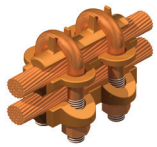	UP SERIES PG. 121
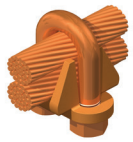	WC SERIES PG. 122

Bronze Connectors for Flat Bar

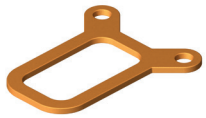	BS SERIES PG. 123
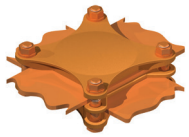	DH SERIES PG. 124
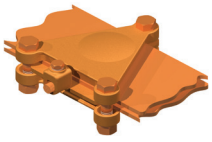	HAF SERIES PG. 125
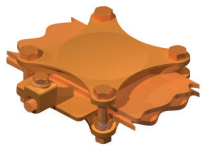	HHF SERIES PG. 127
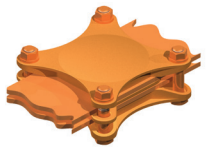	HSS SERIES PG. 129

© 2011, AFL, all rights reserved. Revision 11.21.2024
Specifications are subject to change without notice.

Bronze Grounding Connectors And Everdur Hardware

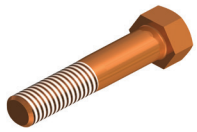	EB SERIES PG. 130
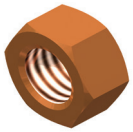	EN SERIES PG. 131
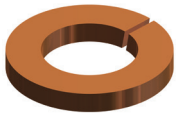	ELW SERIES PG. 131
	EILW SERIES PG. 131
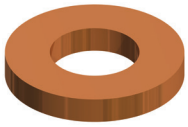	EW SERIES PG. 131
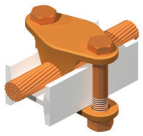	G110 SERIES PG. 132
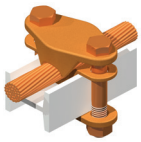	G111 SERIES PG. 132
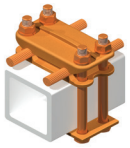	G114 SERIES PG. 132
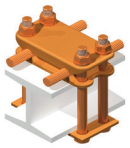	G115 SERIES PG. 132
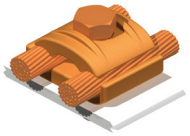	GA SERIES PG. 133
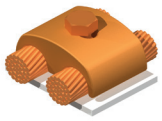	GAM SERIES PG. 134
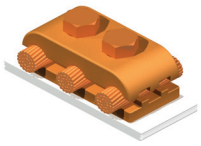	GB SERIES PG. 135
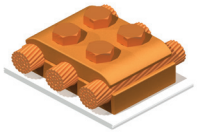	GBB SERIES PG. 136
	GCF SERIES PG. 136
	GCG SERIES PG. 136
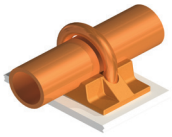	GD SERIES PG. 137
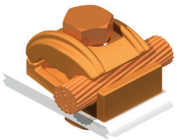	GF SERIES PG. 138
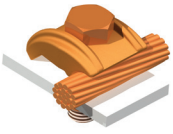	GFM SERIES PG. 139
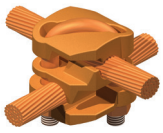	GG SERIES PG. 141
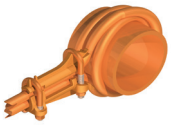	GH SERIES PG. 140
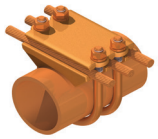	GK SERIES PG. 141
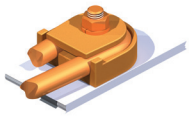	GL SERIES PG. 143
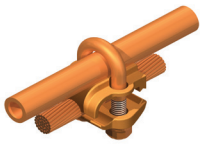	GPC SERIES PG. 144
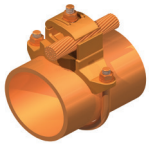	GPF SERIES PG. 146
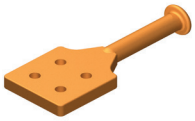	GPH-N SERIES PG. 147
	GPH SERIES PG. 148
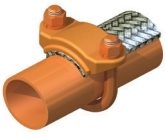	GR SERIES PG. 149
	GS SERIES PG. 150
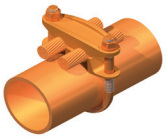	GW SERIES PG. 151

© 2011, AFL, all rights reserved. Revision 11.21.2024
Specifications are subject to change without notice.

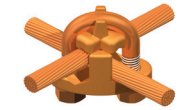	GX SERIES PG. 153
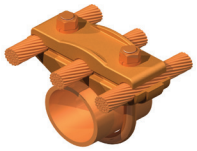	GZ SERIES PG. 154
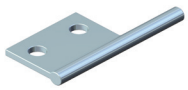	MTRC SERIES PG. 156
	MTR2C SERIES PG. 156
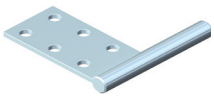	MTR3C SERIES PG. 156
	Q2TE SERIES PG. 157
	Q3TE SERIES PG. 157
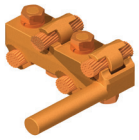	Q4TE SERIES PG. 157
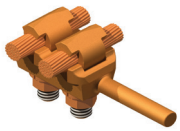	Q2TS SERIES PG. 159
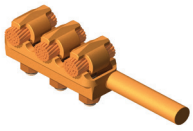	Q3TS SERIES PG. 159
	Q4TS SERIES PG. 159
	TGC SERIES PG. 161

Bronze Stud Connectors

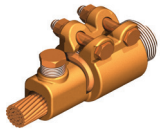	HSC SERIES PG. 162
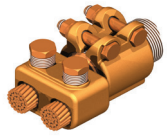	HS2C SERIES PG. 162
	HS3C SERIES PG. 162
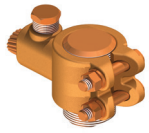	HSC-90 SERIES PG. 164
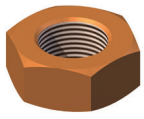	NP SERIES PG. 165
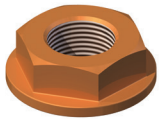	NF SERIES PG. 165
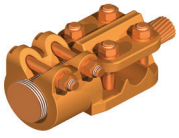	SCX SERIES PG. 166
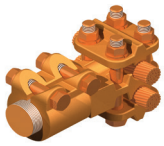	S2CX SERIES PG. 166
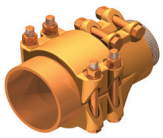	SP SERIES PG. 168
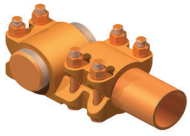	SP-90 SERIES PG. 168
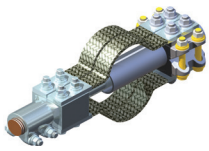	SX-A SERIES PG. 169
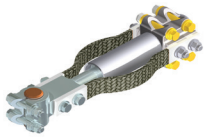	SX-A-90 SERIES PG. 169
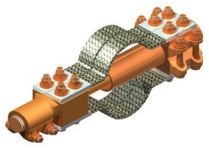	SX SERIES PG. 170
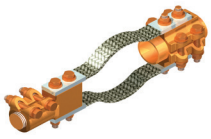	SXP SERIES PG. 170
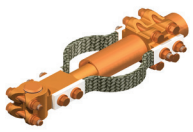	SX-90 SERIES PG. 170
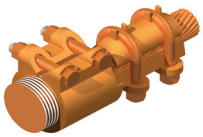	US SERIES PG. 172
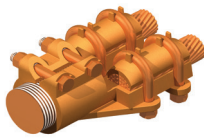	U2S SERIES PG. 172

© 2011, AFL, all rights reserved. Revision 11.21.2024
Specifications are subject to change without notice.


US-90 SERIES
PG. 172

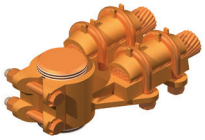
U2S-90 SERIES
PG. 172

Bronze Spacers

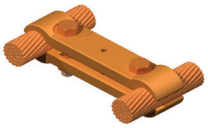
CASV SERIES
PG. 174

Bronze Dead End Clamps


UD2E SERIES
PG. 175


UD2E-PG SERIES
PG. 175

Bronze End Caps

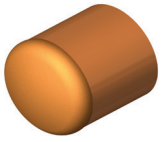
CI SERIES
PG. 176

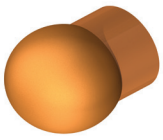
CX SERIES
PG. 176

Bronze Terminals, Taps

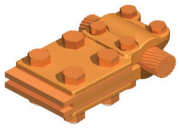
CFT SERIES
PG. 177

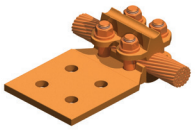
CFTV-S SERIES
PG. 178

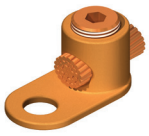
D SERIES
PG. 179

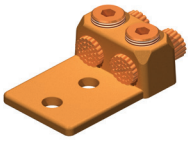
D2 SERIES
PG. 180

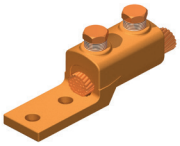
HHL SERIES
PG. 181

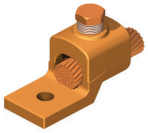
HL SERIES
PG. 183

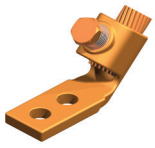
HLA-45 SERIES
PG. 183

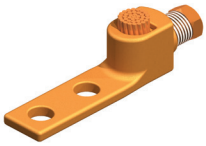
HLA-90 SERIES
PG. 183

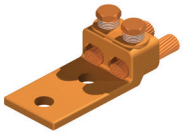
H2L SERIES
PG. 185

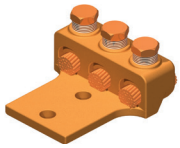
H3L SERIES
PG. 185

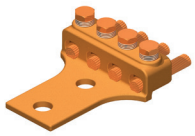
H4L SERIES
PG. 185

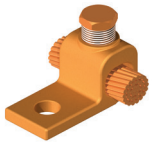
HLB SERIES
PG. 187

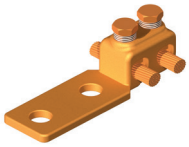
H2LB SERIES
PG. 187


HLS SERIES
PG. 189

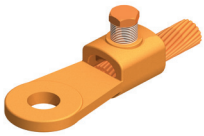
HLSC SERIES
PG. 189


PFTS SERIES
PG. 190

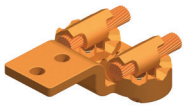
Q2LB SERIES
PG. 192

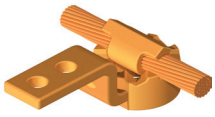
QLB SERIES
PG. 193

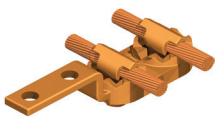
QLLB SERIES
PG. 193

© 2011, AFL, all rights reserved. Revision 11.21.2024
Specifications are subject to change without notice.

Pictorial Index

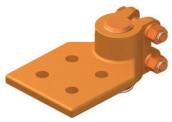	SCB-90H SERIES PG. 195
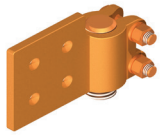	SCB-90V SERIES PG. 195
	SCB-F SERIES PG. 196
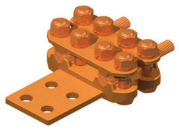	T2CVH SERIES PG. 200
	T2CVHA-45 SERIES PG. 200
	T2CVHA-90 SERIES PG. 200
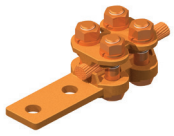	TCVH SERIES PG. 202
	TCVHA-30 SERIES PG. 202
	TCVHA-45 SERIES PG. 202
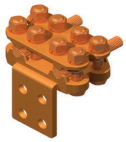	TCVHA-90 SERIES PG. 202
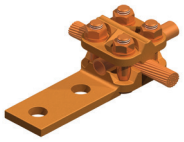	TCX SERIES PG. 204
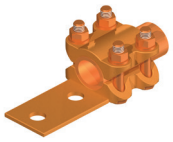	TP SERIES PG. 205
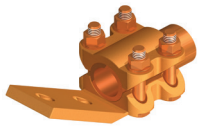	TPA-30 SERIES PG. 205
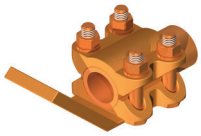	TPA-45 SERIES PG. 205
	TPA-60 SERIES PG. 205
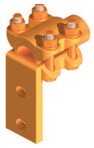	TPA-90 SERIES PG. 205
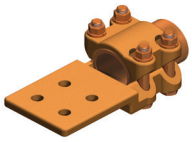	TPC SERIES PG. 207
	UL-90H SERIES PG. 208
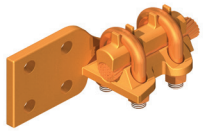	UL-90V SERIES PG. 209
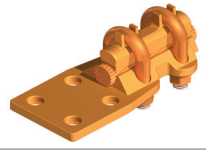	UL SERIES PG. 210
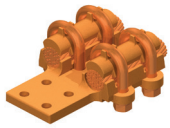	U2L SERIES PG. 210
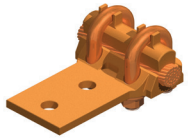	ULB SERIES PG. 212
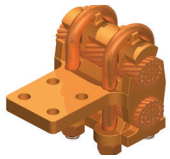	U2LB SERIES PG. 212
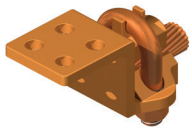	ULI SERIES PG. 214
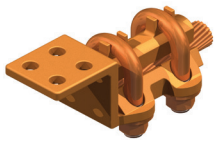	UULI SERIES PG. 214

© 2011, AFL, all rights reserved. Revision 11.21.2024
Specifications are subject to change without notice.

Bronze Compression Connectors

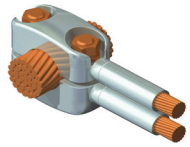	BC2KT SERIES PG. 219
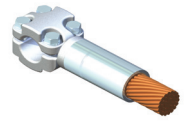	BCKT SERIES PG. 220
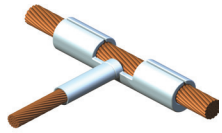	CST SERIES PG. 222
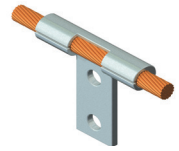	CSTF SERIES PG. 224
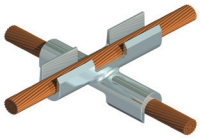	CSX SERIES PG. 225
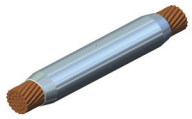	DPC-T SERIES PG. 226
	DPC-SH-1 SERIES PG. 227
	DPC-SH-90 SERIES PG. 227
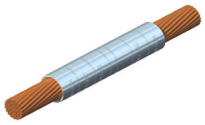	DPCP SERIES PG. 229
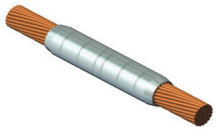	DPCP-T SERIES PG. 229
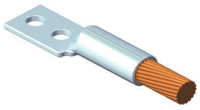	DPL SERIES PG. 230
	DPLE-N SERIES PG. 233
	DPLS SERIES PG. 235
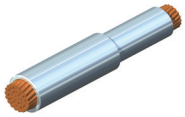	DPR SERIES PG. 238
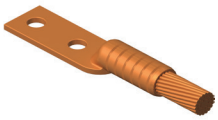	LCA SERIES PG. 240
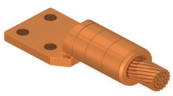	LCAE-N SERIES PG. 241

230 kV Aluminum Bolted Bus Supports

	16300, 16500, 16700 SERIES PG. 251
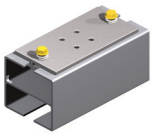	31400 SERIES PG. 252
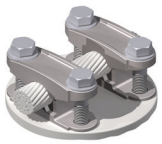	CBP-AA SERIES PG. 253
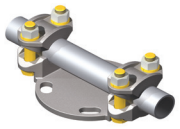	CSD-AA SERIES PG. 254
	CSP-AA SERIES PG. 255
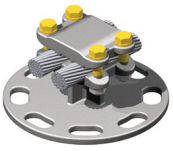	C2SP-AA SERIES PG. 255
	CVSP-AA SERIES PG. 256
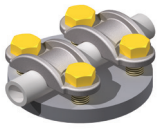	PB-AA SERIES PG. 257
	PBP-AA SERIES PG. 257

© 2011, AFL, all rights reserved. Revision 11.21.2024
Specifications are subject to change without notice.

230 kV Aluminum Bolted Bus Supports

	PL-AA SERIES PG. 258
	PLH-AA SERIES PG. 259
	PSC-AA SERIES PG. 260
	PSD-CH-AA SERIES PG. 261
	PSDC-AA SERIES PG. 263
	PSDCS-AA SERIES PG. 264
	PSG-AA SERIES PG. 265
	PSRE-AA SERIES PG. 266
	PSS-AA SERIES PG. 267
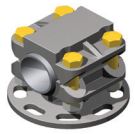	PSS-CH-AA SERIES PG. 267
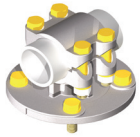	PSSR-AA SERIES PG. 269
	PSU-AA SERIES PG. 270
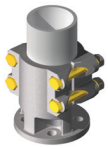	PSV-AA SERIES PG. 271
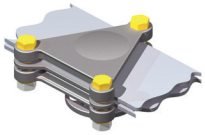	SAH-AA SERIES PG. 272
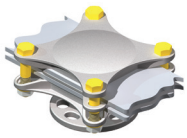	SHH-AA SERIES PG. 272
	SAV-AA SERIES PG. 273
	SHV-AA SERIES PG. 273
	XBC-AA SERIES PG. 275
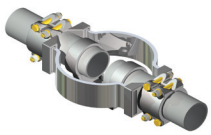	XBCW-AA SERIES PG. 276

230 kV Aluminum Bolted Couplers

	BCX-AA SERIES PG. 277
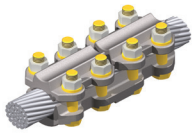	CCV-AA SERIES PG. 278
	CP-AA SERIES PG. 279
	RCV-AA SERIES PG. 280
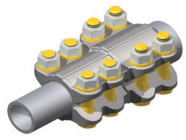	RP-AA SERIES PG. 281
	RPCV-AA SERIES PG. 282
	UK-AA SERIES PG. 284
	UKR-AA SERIES PG. 285
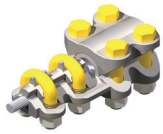	UPK-AA SERIES PG. 286
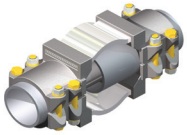	XCW-AA SERIES PG. 287

© 2011, AFL, all rights reserved. Revision 11.21.2024
Specifications are subject to change without notice.

230 kV Aluminum Bolted Corona Bells


CI-AA SERIES
PG. 288

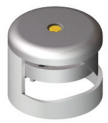
16200 SERIES
PG. 289


CX-AA SERIES
PG. 290

230 kV Aluminum Dead End Clamps


DEC-AA SERIES
PG. 291


DEC-G-AA
PG. 291


SEC-A-2U SERIES
PG. 292


SEC-AA SERIES
PG. 293

230 kV Aluminum Bolted Elbows

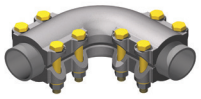
EP-AA SERIES
PG. 294

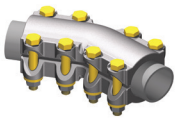
EP-30-AA SERIES
PG. 294

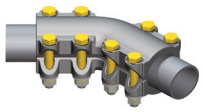
EP-45-AA SERIES
PG. 294

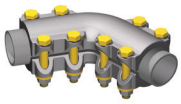
EP-60-AA SERIES
PG. 294

230 kV Aluminum Bolted Bar Clamps And Spacers


BS-AA SERIES
PG. 295

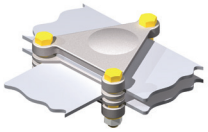
DA-AA SERIES
PG. 296

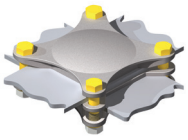
DH-AA SERIES
PG. 297

230 kV Aluminum Bolted Ground Clamps

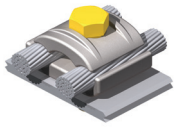
GA-AA, GAA-AA SERIES
PG. 298


GD-AA SERIES
PG. 299

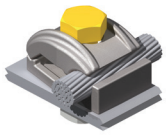
GF-AA SERIES
PG. 300

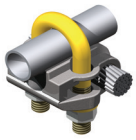
GPC-AA SERIES
PG. 301

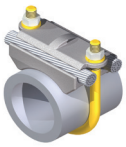
GS-AA SERIES
PG. 303

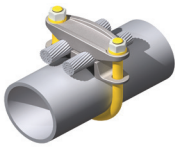
GW-AA SERIES
PG. 304


GCHV-AA SERIES
PG. 305


GPH-AA SERIES
PG. 306


GPH-N-AA SERIES
PG. 307

© 2011, AFL, all rights reserved. Revision 11.21.2024
Specifications are subject to change without notice.

230 kV Aluminum Bolted Parallel Clamps


AC, ACA SERIES — PG. 308


AC100-AA SERIES — PG. 310


PC-AA SERIES — PG. 311

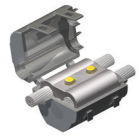
TRV-AA SERIES — PG. 312

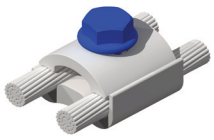
390, 490 SERIES — PG. 313

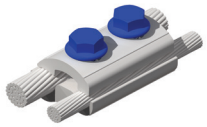
480 SERIES — PG. 314

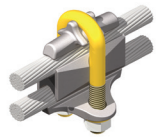
580 SERIES — PG. 315


UD-AA SERIES — PG. 316

230 kV Aluminum Bolted Stud Connectors

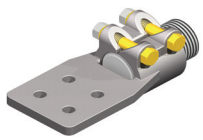
SCB-F-N-AA SERIES — PG. 317

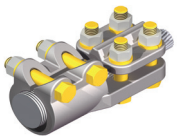
SCV-AA SERIES — PG. 319

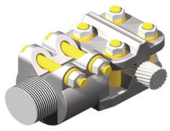
SCX-AA SERIES — PG. 321

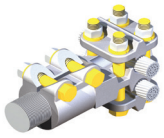
S2CX-AA SERIES — PG. 321

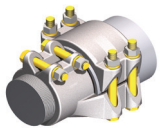
SP-AA SERIES — PG. 322

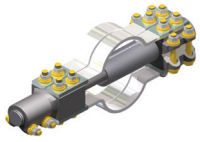
SX-AA SERIES — PG. 323

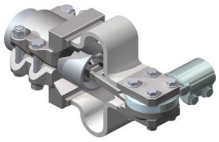
SXLW-SI-AA SERIES — PG. 325

230 kV Aluminum Bolted Tee and Vee Connectors


BAP-AA SERIES — PG. 326


BCV-AA SERIES — PG. 328

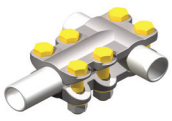
BP-AA, BPA-AA SERIES — PG. 330

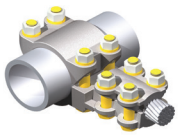
BPCV-AA, BP2CV-AA SERIES — PG. 332

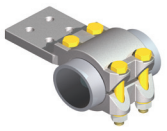
PFTS-AA SERIES — PG. 335

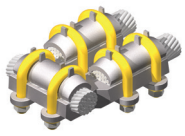
U2T-AA, UUT-AA SERIES — PG. 337

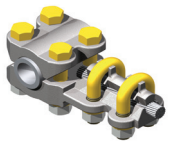
UPT-AA SERIES — PG. 339

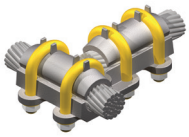
UT-AA, UUT-AA SERIES — PG. 341

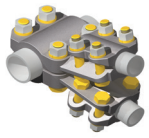
VBP-AA SERIES — PG. 344

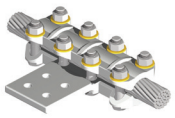
CFTL-AA SERIES — PG. 346

230 kV Aluminum Bolted Cable Spacers


CASV-AA SERIES — PG. 347

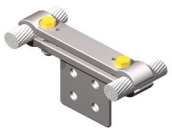
CASV-N-AA, CASV-N-90-AA SERIES — PG. 349

© 2011, AFL, all rights reserved. Revision 11.21.2024
Specifications are subject to change without notice.

230 kV Aluminum Bolted Terminal Connectors


CFTV-AA SERIES
PG. 351


T3CV-AA
PG. 353


T2CV-AA, T2CVA-30-AA, -45, -90 SERIES
PG. 355


TCV-AA, TCVA-15-AA, -30, -45, -90 SERIES
PG. 359

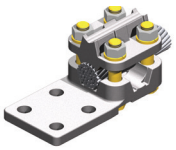
TCX-AA SERIES
PG. 361


TP, TPA-30-AA, -45, -90 SERIES
PG. 363

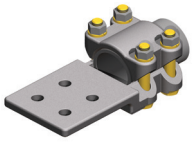
TPC-AA SERIES
PG. 365

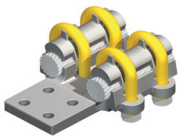
U2L-AA, U2LA-45-AA, -90 SERIES
PG. 367


UL-AA, ULA-45-AA, -90 SERIES
PG. 368

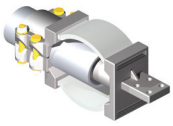
XLW-AA SERIES
PG. 370

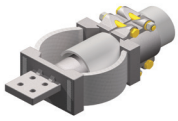
XLW-90V-AA, XLWO-AA SERIES
PG. 372

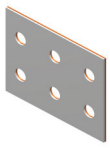
BM SERIES
PG. 374

230 kV Aluminum Bolted Vibration Bampers


1706 SERIES
PG. 375

230 kV Aluminum Welded Bus Supports

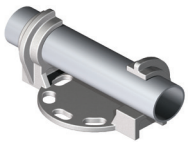
HPS-AA, HPS-CH-AA
PG. 381


PLHS-AA, PLHS-CH-AA
PG. 383


PLHSO-AA SERIES
PG. 384

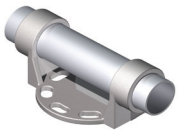
WPS-AA SERIES
PG. 385

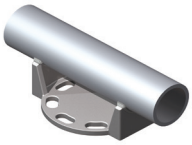
WPSO-AA
PG. 387

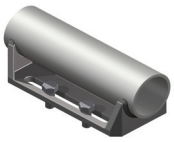
WPSSL-AA SERIES
PG. 388


WPSV-AA
PG. 389

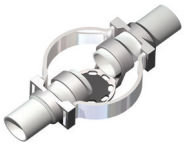
WXBC-AA SERIES
PG. 390

© 2011, AFL, all rights reserved. Revision 11.21.2024
Specifications are subject to change without notice.

230 kV Aluminum Welded Couplers


14700 SERIES
PG. 392

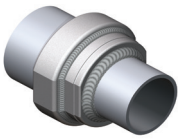
15100 SERIES
PG. 394

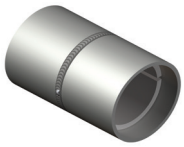
WS-AA, WS-E-AA SERIES
PG. 396

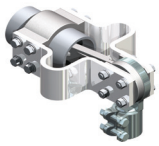
WSXL-SI-AA SERIES
PG. 397


WWC-AA, WWC-E-AA SERIES
PG. 398


WWCR-AA, WWCR-E-AA SERIES
PG. 399

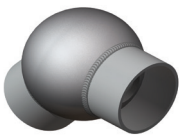
WWSC-AA SERIES
PG. 400

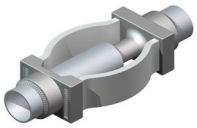
XWWC-AA, XWWC-E-AA SERIES
PG. 401

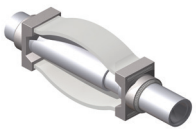
XWWCT-AA SERIES
PG. 402

230 kV Aluminum Welded End Bells


WCX-AA SERIES
PG. 403


WCI-AA, WCI-E-AA SERIES
PG. 404


WP-AA, WP-E-AA SERIES
PG. 405

230 kV Aluminum Welded Elbows


WEPI-AA SERIES
PG. 406

230 kV Aluminum Welded Pipe Taps & Extensions


WGPH-AA SERIES
PG. 408

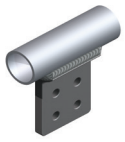
WTC-AA SERIES
PG. 409


WTF-AA SERIES
PG. 410

230 kV Aluminum Welded Tee and Vee Connectors


1000 SERIES
PG. 411


A-FRAME, 14500, 14600 SERIES
PG. 413


WT-AA, WTA-75-AA, -80 SERIES
PG. 415


WVBP-20-AA, WVBP-30-AA SERIES
PG. 417

230 kV Aluminum Welded Terminal Connectors


15950, 15960 SERIES
PG. 419


34300 SERIES
PG. 420


WP2C-N-AA, WP2CA-N-45-AA, WP2CA-N-90-AA SERIES
PG. 421


WPC-N-AA, WPCA-N-30-AA, WPCA-N-45-AA, WPCA-N-90-AA
PG. 424

© 2011, AFL, all rights reserved. Revision 11.21.2024
Specifications are subject to change without notice.

	WTP-N-AA SERIES PG. 427
	WTPA-N-45-AA SERIES PG. 429
	WTPA-N-90-AA SERIES PG. 431
	WTPC-N-AA SERIES PG. 433
	WTPI-N-AA, WTPIA-N-45-AA, WTPIA-N-90-AA SERIES PG. 434
	WTPIC-N-AA SERIES PG. 436
	WTPO-N-AA, WTPOA-N-45-AA, WTPOA-N-90-AA SERIES PG. 437

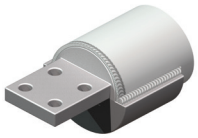	WTPOC-AA SERIES PG. 440
	WWSC-AA SERIES PG. 441
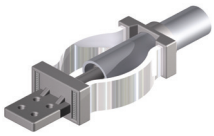	WXL-90V-AA SERIES PG. 442
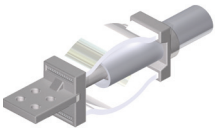	WXL-AA, WXL-E-AA SERIES PG. 444
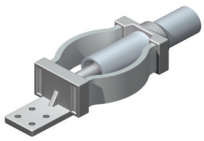	WXLO-AA, WXLO-E-AA SERIES PG. 446

230 kV Aluminum Compression Connectors

	2600, 2700 SERIES PG. 451
	2800 SERIES PG. 452
	2930 SERIES PG. 453
	3400 SERIES PG. 454
	5000 SERIES PG. 455
	5400 SERIES PG. 458
	S5600, S5100 SERIES PG. 460
	S5600-45, S5800 SERIES PG. 466
	DP2L-V-EC SERIES PG. 471

© 2011, AFL, all rights reserved. Revision 11.21.2024
Specifications are subject to change without notice.

345/500 kV Aluminum Bus Supports

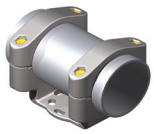
PSD-V-AA, PSD-V-CH-AA SERIES
PG. 479


HPS-HV-AA SERIES
PG. 480


WPS-V-AA, WPS-V-CH-AA SERIES
PG. 481


WPSSL-V-AA SERIES
PG. 483

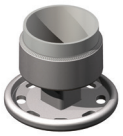
34700 EHV SERIES
PG. 485

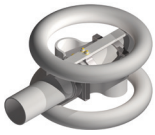
WXBC-V-AA SERIES
PG. 486


WXBC-HV-AA SERIES
PG. 487


C2SWB-V-AA SERIES
PG. 488


15700 EHV SERIES
PG. 489


32800 EHV SERIES
PG. 490


35700 EHV SERIES
PG. 491

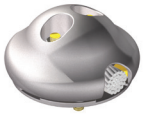
33800 EHV SERIES
PG. 492

345/500 kV Aluminum Couplers


CP-V-AA SERIES
PG. 495


CPV-V-AA SERIES
PG. 496


WWC-AA, WWC-E-AA SERIES
PG. 497

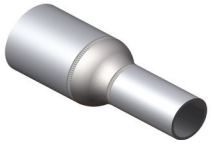
WWCR-V-AA SERIES
PG. 498

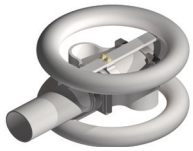
XWWC-V-AA, XWWC-HV-AA SERIES
PG. 499

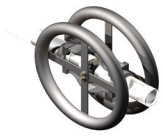
XWWCT-HV-AA SERIES
PG. 500

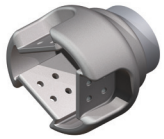
WRP3C-8-V-AA SERIES
PG. 501


35300 EHV SERIES
PG. 502

345/500 kV Aluminum Vibration Damper


1705-EHV, 1706-EHV SERIES
PG. 503

345/500 kV Aluminum Corona Bells


CXBHV-AA, CXWHV-AA SERIES
PG. 504

345/500 kV Aluminum Tee Connectors


BAP-V-AA SERIES
PG. 505


PFTS-V-AA SERIES
PG. 506


BPA-75-V-AA SERIES
PG. 508

© 2011, AFL, all rights reserved. Revision 11.21.2024
Specifications are subject to change without notice.

	WT-AA, WTA-75-AA, -80 SERIES PG. 509
	WTC-V-AA, WTF-V-AA SERIES PG. 512
	WVBP-20-V-AA, WVBP-30-V-AA SERIES PG. 513
	BPC-V-AA SERIES PG. 515
	CFT-AA SERIES PG. 516
	VBP-30-V-AA SERIES PG. 517
	1000-EHV SERIES PG. 518
	WT3C-8-V-AA SERIES PG. 520
	3500-EHV SERIES PG. 521

	BC-V-AA SERIES PG. 523
	34900-EHV SERIES PG. 525
	34992-EHV, 34993-EHV SERIES PG. 528
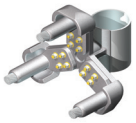	34996-EHV, 34997-EHV SERIES PG. 531

345/500 kV Aluminum A-Frames

	A-FRAME SERIES PG. 534

345/500 kV Aluminum Connectors

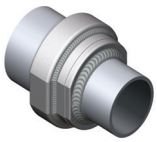	15100-EHV SERIES PG. 535
	14700-EHV SERIES PG. 536

345/500 kV Aluminum Terminal Connectors

	TP-4N4-V-AA, TPA-4N4-90-V-AA SERIES PG. 537
	WTPC-4N4-V-AA SERIES PG. 539
	WTPI-V-AA, WTPIA-90-V-AA SERIES PG. 540
	WTPIC-V-AA , WTPIC-E-V-AA SERIES PG. 542
	WXL-V-AA, WXL-HV-AA SERIES PG. 543
	TC-V-AA, T2C-V-AA SERIES PG. 544
	WPC-V-AA, WP2C-V-AA SERIES PG. 546
	WPCA-45-V-AA WP2CA-45-V-AA SERIES PG. 549

© 2011, AFL, all rights reserved. Revision 11.21.2024
Specifications are subject to change without notice.

	34200E-EHV SERIES PG. 551
	34300-EHV SERIES PG. 552
	APTV-AA SERIES PG. 553
	APT-AA SERIES PG. 554
	TWTC-N-V-AA SERIES PG. 555
	34994E-EHV, 34995E-EHV SERIES PG. 556
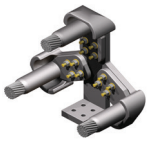	34999E-EHV SERIES PG. 559
	33900, 34000 INLINE SERIES PG. 562
	38900-EHV SERIES PG. 564

345/500 kV Aluminum Elbows

	WEPI-AA SERIES PG. 565
	35400, 35500 SERIES PG. 567

345/500 kV Aluminum Ground Jumpers

	WGPHV-AA SERIES PG. 568
	34600-EHV SERIES PG. 569
	34650-EHV SERIES PG. 570
	34620-EHV SERIES PG. 571

345/500 kV Aluminum Spacer Clamps

	1800-EHV SERIES PG. 572
	CAS-V-AA SERIES PG. 573

	CAS-N-V-AA SERIES PG. 576
	CAS-N-90-V-AA SERIES PG. 576
	38100-EHV SERIES PG. 579
	38400-EHV SERIES PG. 580
	38500-EHV SERIES PG. 580
	38300-EHV SERIES PG. 581

345/500 kV Aluminum Hardware Shields

	CSBE-V-AA SERIES PG. 582
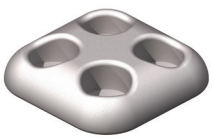	4040-EHV SERIES PG. 582
	6040-EHV SERIES PG. 582

© 2011, AFL, all rights reserved. Revision 11.21.2024
Specifications are subject to change without notice.

345/500 kV Aluminum Parallel Clamps



PC-V-AA SERIES

PG. 583

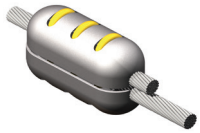

35600-EHV SERIES

PG. 585

345/500 kV Aluminum Stud Connectors



SCB-F-V-AA SERIES

PG. 586

345/500 kV Aluminum Compression



2800-EHV, 5300-EHV

PG. 587



2900-EHV

PG. 588



5400

PG. 589



5500

PG. 590



5000-EHV

PG. 592



2500-EHV

PG. 593



2600

PG. 594



2700

PG. 594



3400-EHV

PG. 595



S5600-EHV, S5100 -EHV

PG. 596



S5600-45-EHV, S5800-EHV

PG. 599



DP2L-V-EC

PG. 604

765 kV Bus Supports



B6998 SERIES

PG. 609

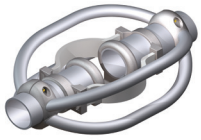

B7101 SERIES

PG. 610

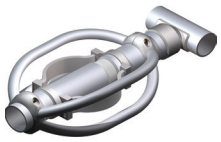

B7582 SERIES

PG. 611



C7009 SERIES

PG. 612

765 kV Couplers



B7070 SERIES

PG. 613



WWC-AA, WWC-E-AA

PG. 614

765 kV Corona Bells



34433 SERIES

PG. 615



CXBV600 SERIES

PG. 615

© 2011, AFL, all rights reserved. Revision 11.21.2024
Specifications are subject to change without notice.

765 kV Tee Connectors

	BAC-EHV-AA PG. 616
	BCW-EHV-AA PG. 617
	B7568-A SERIES PG. 618
	B7071 SERIES PG. 619
	B7072 SERIES PG. 620
	B7095 SERIES PG. 621
	B7006 SERIES PG. 622
	B7875 SERIES PG. 623
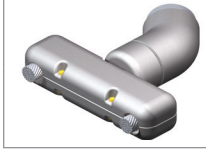	B7096-A SERIES PG. 624
	B7566 SERIES PG. 625
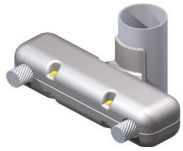	B7565 SERIES PG. 625
	B7876 SERIES PG. 626
	B7882 SERIES PG. 626
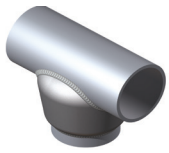	WT-EHV-AA PG. 627
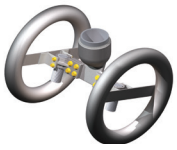	WRP2CA-20-EHV-AA PG. 628
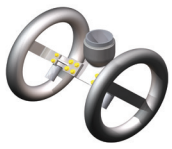	WRP2CA-45-EHV-AA PG. 628

765 kV Terminal Connectors

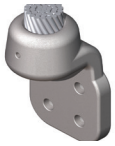	WPC-4S4-AA-WH PG. 629
	WPCA-4S4-90-AA-WH PG. 629
	WPCA-20-AA-WH PG. 630
	WPCA-45-AA-WH PG. 630
	WPCA-75-AA-WH PG. 631
	WPCA-15L-AA-WH PG. 631
	WPCA-15R-AA-WH PG. 631
	WPCA-15R-20-AA-WH PG. 631
	WPCA-15L-20-AA-WH PG. 631
	B7094 SERIES PG. 632
	B7567 SERIES PG. 632
	B7001 SERIES PG. 633

© 2011, AFL, all rights reserved. Revision 11.21.2024
Specifications are subject to change without notice.

Pictorial Index


WP2CA-45-EHV-AA
PG. 634


B7583-A SERIES
PG. 635


B7878-A SERIES
PG. 636

765 kV Ground Jumpers


34640-EHV SERIES
PG. 637

765 kV Spacer Clamps


B7073 SERIES
PG. 638


C6999-A SERIES
PG. 638

765 kV Vibration Dampers


1705 SERIES
PG. 639


B7384 SERIES
PG. 639

765 kV Stud Connectors


B7004-A SERIES
PG. 640


B7074-A SERIES
PG. 641


B7108-A SERIES
PG. 642


B7879-A SERIES
PG. 643


B7880 SERIES
PG. 643

Compounds



AFL No. 2 Electrical Joint Compound (No. 2 EJC)
PG. 683



Alnox® Electrical Joint Compound
PG. 684



AFL Filler Compound
PG. 685



HiTemp® Universal Compound (HiTUC)
PG. 686

© 2011, AFL, all rights reserved. Revision 11.21.2024
Specifications are subject to change without notice.

General Information—Accessory Catalog Numbers

Aluminum Bolted Accessories

ACCESSORY	PIPE SIZE						
	1″	1 - 1/2″	2″	2 - 1/2″	3″	3 - 1/2″	4″
Support							
Double Ring	PSD100-5-CH-AA	PSD150-5-CH-AA	PSD200-5-CH-AA	PSD250-5-CH-AA	PSD250-5-CH-AA	PSD300-5-CH-AA	PSD400-5-CH-AA
End - 3" BCM	PSV100-3-AA	PSV150-3-AA	PSV200-3-AA	PSV250-3-AA	PSV300-3-AA	PSV350-3-AA	PSV400-3-AA
5" BCM	PSV100-5-AA	PSV150-5-AA	PSV200-5-AA	PSV250-5-AA	PSV300-5-AA	PSV350-5-AA	PSV400-5-AA
Expansion Support	XBCW100-5-CH-AA	XBCW150-5-CH-AA	XBCW200-5-CH-AA	XBCW250-5-CH-AA	XBCW300-5-CH-AA	XBCW350-5-CH-AA	XBCW400-5-CH-AA
Couplers							
Expansion SPS	XCW100-AA	XCW150-AA	XCW200-AA	XCW250-AA	XCW300-AA	XCW350-AA	XCW400-AA
Expansion EHPS	XCW100E-AA	XCW150E-AA	XCW200E-AA	XCW250E-AA	XCW300E-AA	XCW350E-AA	XCW400E-AA
Coupler	CP100-AA	CP150-AA	CP200-AA	CP250-AA	CP300-AA	CP350-AA	CP400-AA
Elbow - 45˚	EP100-45-AA	EP150-45-AA	EP200-45-AA	EP250-45-AA	EP300-45-AA	EP350-45-AA	EP400-45-AA
90˚	EP100-90-AA	EP150-90-AA	EP200-90-AA	EP250-90-AA	EP300-90-AA	EP350-90-AA	EP400-90-AA
Terminal - Offset	TP100-4N-AA	TP150-4N-AA	TP200-4N-AA	TP250-4N-AA	TP300-4N-AA	TP350-4N-AA	TP400-4N-AA
45˚	TPA100-4N-45-AA	TPA150-4N-45-AA	TPA200-4N-45-AA	TPA250-4N-45-AA	TPA300-4N-45-AA	TPA350-4N-45-AA	TPA400-4N-45-AA
90˚	TPA100-4N-90-AA	TPA150-4N-90-AA	TPA200-4N-90-AA	TPA250-4N-90-AA	TPA300-4N-90-AA	TPA350-4N-90-AA	TPA400-4N-90-AA
Expansion Terminal							
Center Form SPS	–	XLW150-4N-AA	XLW200-4N-AA	XLW250-4N-AA	XLW300-4N4-AA	XLW350-4N4-AA	XLW400-4N4-AA
EHPS	–	XLW150E-4N-AA	XLW200E-4N-AA	XLW250E-4N-AA	XLW300E-4N4-AA	XLW350E-4N4-AA	XLW400E-4N4-AA
Offset SPS	–	XLWO150-4N-AA	XLWO200-4N-AA	XLWO250-4N-AA	XLWO300-4N4-AA	XLWO350-4N4-AA	XLWO400-4N4-AA
EHPS	–	XLW150E-4N-AA	XLW200E-4N-AA	XLW250E-4N-AA	XLW300E-4N4-AA	XLW350E-4N4-AA	XLW400E-4N4-AA
Tee-Tap - Parallel	PFTS100-1-4N-AA	PFTS150-1-4N-AA	PFTS200-1-4N-AA	PFTS250-1-4N-AA	PFTS300-1-4N4-AA	PFTS350-1-4N4-AA	PFTS400-1-4N4-AA
End Plug							
Drive - SPS	–	CI150-AA	CI200-AA	CI250-AA	CI300-AA	CI350-AA	CI400-AA
EHPS	–	CI150E-AA	CI200E-AA	CI250E-AA	CI300E-AA	CI350E-AA	CI400E-AA
Bolt - SPS	–	16205	16206	16207	16208	16209	16210
EHPS	–	16225	16226	16227	16228	16229	16230

Aluminum Welded Accessories

ACCESSORY	PIPE SIZE						
	2″	2 - 1/2″	3″	3 - 1/2″	4″	5″	6″
Support							
Double Ring	WPS200-5-CH-AA	WPS250-5-CH-AA	WPS300-5-CH-AA	WPS350-5-CH-AA	WPS400-5-CH-AA	WPS500-5-CH-AA	WPS600-5-CH-AA
Single Ring	PLHS200-5-CH-AA	PLHS250-5-CH-AA	PLHS300-5-CH-AA	PLHS350-5-CH-AA	PLHS400-5-CH-AA	PLHS500-5-CH-AA	PLHS600-5-CH-AA
Hook	HPS200-5-CH-AA	HPS250-5-CH-AA	HPS300-5-CH-AA	HPS350-5-CH-AA	HPS400-5-CH-AA	HPS5010-5-CH-AA	HPS600-5-CH-AA
End	WPSV200-5-AA	WPSV250-5-AA	WPSV300-5-AA	WPSV350-5-AA	WPSV400-5-AA	WPSV500-5-AA	WPSV600-5-AA
Expansion Support	WXBC200E-5-AA	WXBC250E-5-AA	WXBC300E-5-AA	WXBC350E-5-AA	WXBC400E-5-AA	WXBC500E-5-AA	WXBC500E-5-AA
Expansion Coupler							
SPS	XWWC200-AA	XWWC250-AA	XWWC300-AA	XWWC350-AA	XWWC400-AA	XWWC500-AA	XWWC600-AA
EHPS	XWWC200E-AA	XWWC250E-AA	XWWC300E-AA	XWWC350E-AA	XWWC400E-AA	XWWC500E-AA	XWWC600E-AA
Coupler							
SPS	WWC200-AA	WWC250-AA	WWC300-AA	WWC350-AA	WWC400-AA	WWC500-AA	WWC600-AA
EHPS	WWC200E-AA	WWC250E-AA	WWC300E-AA	WWC350E-AA	WWC400E-AA	WWC500E-AA	WWC600E-AA
Elbow - 45˚	WEPI200-45-AA	WEPI250-45-AA	WEPI300-45-AA	WEPI350-45-AA	WEPI400-45-AA	WEPI500-45-AA	WEPI600-45-AA
90˚	WEPI200-AA	WEPI250-AA	WEPI300-AA	WEPI350-AA	WEPI400-AA	WEPI500-AA	WEPI600-AA
Terminal							
Center Form	WTPC200-4N-AA	WTPC250-4N4-AA	WTPC300-4N4-AA	WTPC350-4N4-AA	WTPC400-4N4-AA	WTPC500-4N4-AA	WTPC600-4N4-AA
Offset	WTP200-4N-AA	WTP250-4N-AA	WTP300-4N4-AA	WTP350-4N4-AA	WTP400-4N4-AA	WTP500-4N4-AA	WTP600-4N4-AA
90˚	WTPA200-4N-90-AA	WTPA250-4N-90-AA	WTPA300-4N4-90-AA	WTPA350-4N4-90-AA	WTPA400-4N4-90-AA	WTPA500-4N4-90-AA	WTPA600-4N4-90-AA
Expansion Terminal							
Center Form SPS	WXL200-4N-AA	WXL250-4N-AA	WXL300-4N4-AA	WXL350-4N4-AA	WXL400-4N4-AA	WXL500-4N4-AA	WXL600-4N4-AA
EHPS	WXL200E-4N-AA	WXL250E-4N-AA	WXL300E-4N4-AA	WXL350E-4N4-AA	WXL400E-4N4-AA	WXL500E-4N4-AA	WXL600E-4N4-AA
Offset SPS	WXLO200-4N-AA	WXLO250-4N-AA	WXLO300-4N4-AA	WXLO350-4N4-AA	WXLO400-4N4-AA	WXLO500-4N4-AA	WXLO600-4N4-AA
EHPS	WXLO200E-4N-AA	WXLO250E-4N-AA	WXLO300E-4N4-AA	WXLO350E-4N4-AA	WXLO400E-4N4-AA	WXLO500E-4N4-AA	WXLO600E-4N4-AA
Tee-Tap							
Parallel	WTC250-4N-AA	WTC250-4N-AA	WTC600-4N4-AA	WTC600-4N4-AA	WTC600-4N4-AA	WTC600-4N4-AA	WTC600-4N4-AA
Transverse	WTF250-4N-AA	WTF250-4N-AA	WTF600-4N4-AA	WTF600-4N4-AA	WTF600-4N4-AA	WTF600-4N4-AA	WTF600-4N4-AA
End Plug	WCX200-AA	WCX250-AA	WCX300-AA	WCX350-AA	WCX400-AA	WCX500-AA	WCX600-AA
Ground Stud	WGPH250-AA	WGPH250-AA	WGPH600-AA	WGPH600-AA	WGPH600-AA	WGPH600-AA	WGPH600-AA

Notes:

1. Supports listed in table are for 5″ BCM; 3″ and 7″BCM's are available-see catalog pages referenced.

© 2011, AFL, all rights reserved. PP-3-00069, Revision 6, 3.29.2023
Specifications are subject to change without notice.

General Information

Aluminum Bolted Bus Accessories

Bus Conductor Accessories are designed with large contact area and appropriate clamping forces to give them the efficient long life and trouble-free-operation typical. Aluminum Bus accessories, including the bolts and nuts, are made from high strength aluminum alloys. The large aluminum bolts maintain high contact pressure during heating and cooling cycles since the coefficients of expansion of the conductor, fittings and bolts are essentially the same. Bolts have an Alumilte* 205 finish and are coated with lubricant to give additional resistance to corrosion. The reduced friction provided by this lubricant coating gives a higher bolting pressure for a given torque.

AFL Conductor Accessories No. 2 Electrical Joint Compound is recommended for making aluminum- to- aluminum and aluminum -to-copper bolted joints. This compound is an effective seal against the entrance of moisture and corrosive or oxidizing agents. It has the additional advantage of chemically aiding in the removal of the natural oxides of aluminum. The flow point of AFL No. 2 Electrical Joint Compound is a about 150°F (66°C), although tests show that a film remains in the joint up to 200°F (92°C) to seal the joint and maintain stable operation.

Experience has shown that bolted joints on electrical bus conductors made with unbushed electrical fittings with the proper joint preparation and with adequate sealing of the connection, are entirely satisfactory for aluminum-to-aluminum and aluminum -to-copper connections.

Method of Making Bolted Electrical Connections

(1) Remove grease and dirt from contact surfaces.
(2) Coat thoroughly with No. 2 Electrical Joint Compound.
(3) Abrade surfaces through coating with wire brush or emery cloth.
(4) Assemble joint without removal of compound, and any excess may be left on the edges to seal the contact surfaces.

*Trademark of Aluminum Company of America

RECOMMENDED TIGHTENING TORQUE FOR ALUMINUM BOLTS WITH ALUMILITE 205 FINISH AND LUBRICANT COATING

Bolt Diameter (inches)	Torque		Bolt Diameter (inches)	Torque	
	Ft-Lbs	N. m		Ft-Lbs	N. m
3/8	15	20	5/8	40	54
7/16	20	27	3/4	60	81
1/2	25	34			

RECOMMENDED TIGHTENING TORQUE FOR GALVANIZED STEEL BOLTS WITH LUBRICANT COATING

Bolt Diameter (inches)	Torque		Bolt Diameter (inches)	Torque	
	Ft-Lbs	N. m		Ft-Lbs	N. m
5/16	15	20	5/8	60	81
3/8	25	34	3/4	75	102
1/2	40	54			

RECOMMENDED TIGHTENING TORQUE FOR SILICON BRONZE BOLTS

Bolt Diameter (inches)	Torque		Bolt Diameter (inches)	Torque	
	Ft-Lbs	N. m		Ft-Lbs	N. m
5/16-18	11	14	5/8-11	70	94
3/8-16	20	27	3/4-10	100	135
1/2-13	40	54			

RECOMMENDED TIGHTENING TORQUE FOR STAINLESS STEEL (18-8)

Bolt Diameter (inches)	Torque		Bolt Diameter (inches)	Torque	
	Ft-Lbs	N. m		Ft-Lbs	N. m
5/16-18	15	20	5/8-11	55	54
3/8-16	20	27	3/4-10	87	73
1/2-13	40	34			

Ref: PA2014-2960

Aluminum Welded Bus Accessories

AFL Welded fittings (unless otherwise specified) will conduct the rated current of the largest conductor to which they can be applied. The dimensions of bus accessory surfaces to be welded are designed so that the proper weld bead for full conductivity is automatically applied. Conductor socket depths are generous, allowing wide tolerance in cutting conductors to length. For the larger conductors, a choice of terminal pad sizes are available.

The streamlined design and the absence of protruding bolts (which act as corona points) make AFL Welded Bus Accessories an excellent choice for the construction of Extra-High -Voltage substations. AFL Welded Aluminum Bus accessories will save construction dollars three ways.

FIRST, AFL Welded Bus Accessories pass on to the user the manufacturing economies gained by the elimination of superfluous material. SECOND use of welded bus accessories reduces installation costs through a user-cost-conscious design that provides a minimum welding surface—thus reducing welding time. THIRD, well-engineered and economical fittings accommodate a wide conductor range, permitting users to reduce significantly the number of stock sizes normally needed to handle a wide range of conductor sizes.

Representing the results of years of development and experience, this catalog provides electrical and mechanical details on AFL full line of standard welded electrical bus accessories. Inquiries regarding special design problems are invited and should be directed to your local sales representative.

© 2011, AFL, all rights reserved. PP-3-00069, Revision 6, 3.29.2023
Specifications are subject to change without notice.

General Information—NEMA Standard Pad Sizes

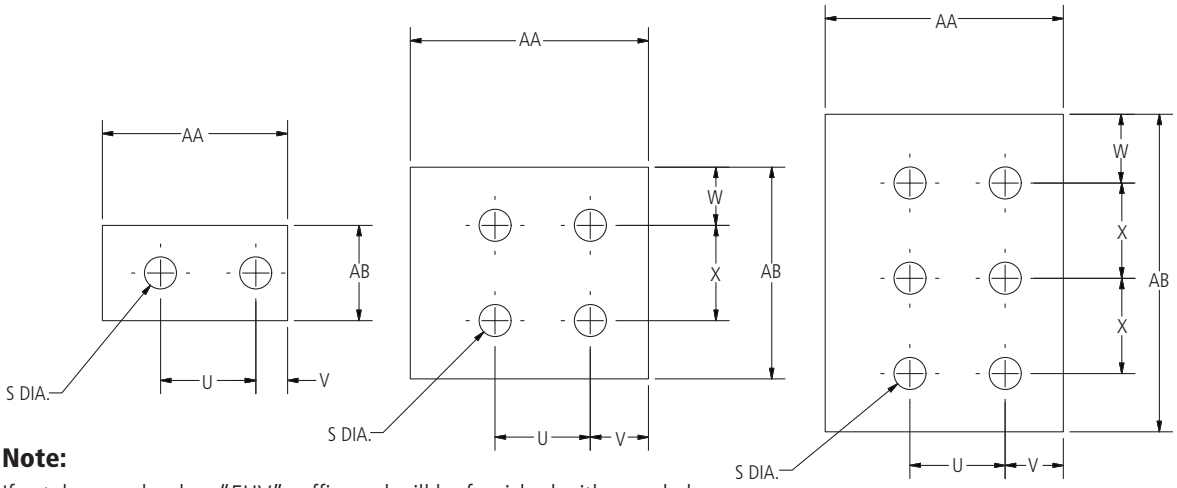

Note:
If catalog number has "EHV" suffix, pad will be furnished with rounded corners.

Pad Size	Dimensions						
	S	U	V	W	X	AA	AB
	in	in	in	in	in	in	in
B or 2N	0.6	1.8	0.6	—	—	3.0	1.8
D or 4N	0.6	1.8	0.6	0.6	1.8	3.0	3.0
E or 4N4	0.6	1.8	1.1	1.1	1.8	4.0	4.0
F or 5N4	0.6	1.8	1.1	0.8	1.8	4.0	5.0
G or 6N4	0.6	1.8	1.1	1.3	1.8	4.0	6.0

For non-standard pads, specify the S, U, V, W, or X dimensions. If the pad is to be copper faced or specially machined, give detailed information and whether the bottom side, top side or both sides are involved. When centerline of bolt spacing does not coincide with the centerline of the pad, this then becomes non-standard drilling. In this case, the holes are offset on the pad by distance W and/or distance V.

Bus Support Bases

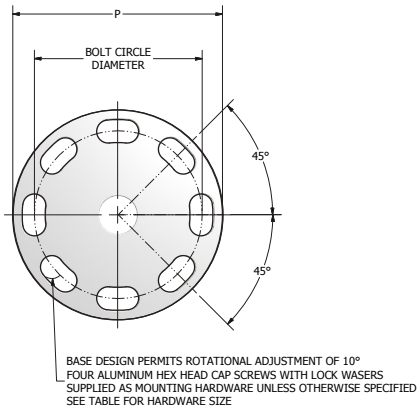

Bolt Circle Mounting	Dimensions		Mounting Hardware Supplied
	Base Thickness	P	
in	in	in	
3	0.5	4.3	1/2-13 x .87 Galvanized Steel Hex Hd. Bolts & 1/2 Lockwashers
5	0.5	6.3	5/8-11 x 1.25 Galvanized Steel Hex Hd. Bolts & 5/8 Lockwashers
7	0.5	8.5	3/4 x 1.50 Galvanized Steel Hex Hd. Bolts & 3/4 Lockwashers

© 2011, AFL, all rights reserved. PP-3-00069, Revision 6, 3.29.2023
Specifications are subject to change without notice.

Conductor Information for ACSR Conductors

Code Name	Size	Stranding	Diameter (Inches)				Weight per 1000 ft	Rated Strength	Resistance OHMS per 1000 ft		Allowable Ampacity[1]	SAG10® Chart Number
			Individual Wires		Steel Core	Complete Cable						
	kcmil	Al/St	Al	St			lbs	lbs	DC @ 20°C	AC @ 75°C	Amps	
Turkey	6	6/1	0.066	0.066	0.066	0.198	36	1,190	0.641	0.806	105	1-1023
Swan	4	6/1	0.083	0.083	0.083	0.250	57	1,860	0.403	0.515	140	1-1023
Swanate	4	7/1	0.077	0.103	0.103	0.257	67	2,360	0.399	0.519	140	1-670
Sparrow	2	6/1	0.105	0.105	0.105	0.316	91	2,850	0.254	0.332	184	1-1023
Sparate	2	7/1	0.097	0.130	0.130	0.325	107	3,460	0.251	0.338	184	1-670
Robin	1	6/1	0.118	0.118	0.118	0.354	115	3,550	0.201	0.268	212	1-938
Rave	1/0	6/1	0.133	0.133	0.133	0.398	145	4,380	0.159	0.217	242	1-938
Quail	2/0	6/1	0.149	0.149	0.149	0.447	183	5,310	0.126	0.176	276	1-938
Pigeon	3/0	6/1	0.167	0.167	0.167	0.502	231	6,620	0.100	0.144	315	1-938
Penguin	4/0	6/1	0.188	0.188	0.188	0.563	291	8,350	0.080	0.119	357	1-938
Waxwing	266.8	18/1	0.122	0.122	0.122	0.609	289	6,880	0.064	0.079	449	1-844
Partridge	266.8	26/7	0.101	0.079	0.236	0.642	367	11,300	0.064	0.078	475	1-782
Ostrich	300	26/7	0.107	0.084	0.251	0.680	412	12,700	0.057	.069	492	1-782
Merlin	336.4	18/1	0.137	0.137	0.137	0.684	365	8,680	0.051	0.063	519	1-844
Linnet	336.4	26/7	0.115	0.089	0.265	0.720	462	14,100	0.051	0.062	529	1-782
Oriole	336.4	30/7	0.106	0.106	0.318	0.741	526	17,300	0.050	0.061	535	1-773
Chickadee	397.5	18/1	0.149	0.149	0.149	0.743	431	9,940	0.043	0.053	576	1-844
Brant	397.5	24/7	0.129	0.086	0.257	0.772	511	14,600	0.043	0.053	584	1-889
Ibis	397.5	26/7	0.124	0.096	0.289	0.783	546	16,300	0.043	0.052	587	1-782
Lark	397.5	30/7	0.115	0.115	0.345	0.806	622	20,300	0.043	0.052	594	1-773
Pelican	477	18/1	0.163	0.163	0.163	0.814	517	11,800	0.036	0.044	646	1-844
Flicker	477	24/7	0.141	0.094	0.282	0.846	614	17,200	0.036	0.044	655	1-889
Hawk	477	26/7	0.135	0.105	0.316	0.858	656	19,500	0.036	0.044	659	1-782
Hen	477	30/7	0.126	0.126	0.378	0.883	746	23,800	0.035	0.043	666	1-773
Osprey	556.5	18/1	0.176	0.176	0.176	0.879	603	13,700	0.031	0.038	711	1-844
Parakeet	556.5	24/7	0.152	0.102	0.305	0.914	716	19,800	0.031	0.038	721	1-889
Dove	556.5	26/7	0.146	0.114	0.341	0.927	765	22,600	0.031	0.038	726	1-782
Eagle	556.5	30/7	0.136	0.136	0.409	0.953	871	27,800	0.030	0.037	734	1-773
Peacock	605	24/7	0.159	0.106	0.318	0.953	779	21,600	0.028	0.035	760	1-889
Squab	605	26/7	0.153	0.119	0.356	0.966	832	24,300	0.028	0.035	765	1-782
Wood Duck	605	30/7	0.142	0.142	0.426	0.994	946	28,900	0.028	0.034	774	—
Teal	605	30/19	0.142	0.085	0.426	0.994	939	30,000	0.028	0.034	773	1-757
Kingbird	636	18/1	0.188	0.188	0.188	0.940	690	15,700	0.027	0.033	773	1-844
Swift	636	36/1	0.133	0.133	0.133	0.930	643	13,690	0.027	0.033	769	1-898
Rook	636	24/7	0.163	0.109	0.326	0.977	818	22,000	0.027	0.033	784	1-889
Grosbeak	636	26/7	0.156	0.122	0.365	0.991	874	25,200	0.027	0.033	789	1-782

© 2011, AFL, all rights reserved. PP-3-00069, Revision 6, 3.29.2023
Specifications are subject to change without notice.

Conductor Information for ACSR Conductors
(continued)

Code Name	Size	Stranding	Diameter (Inches)				Weight per 1000 ft	Rated Strength	Resistance OHMS per 1000 ft		Allowable Ampacity[1]	SAG10® Chart Number
			Individual Wires		Steel Core	Complete Cable						
	kcmil	Al/St	Al	St			lbs	lbs	DC @ 20°C	AC @ 75°C	Amps	
Scoter	636	30/7	0.146	0.146	0.437	1.019	995	30,400	0.026	0.033	798	—
Egret	636	30/19	0.146	0.087	0.437	1.019	987	31,500	0.027	0.033	798	1-757
Flamingo	666.6	24/7	0.167	0.111	0.333	1.000	858	23,700	0.026	0.032	807	1-889
Gannet	666.6	26/7	0.160	0.125	0.374	1.014	916	26,400	0.026	0.031	812	1-782
Stilt	715.5	24/7	0.173	0.115	0.345	1.036	920	25,500	0.024	0.029	844	1-889
Starling	715.5	26/7	0.166	0.129	0.387	1.051	984	28,400	0.024	0.029	849	1-537
Redwing	715.5	30/19	0.154	0.093	0.463	1.081	1,110	34,600	0.024	0.029	859	1-757
Coot	795	36/1	0.149	0.149	0.149	1.040	804	16,710	0.022	0.027	884	1-898
Drake	795	26/7	0.175	0.136	0.408	1.107	1,093	31,500	0.021	0.026	907	1-537
Tern	795	45/7	0.133	0.089	0.266	1.063	895	22,100	0.022	0.027	887	1-955
Condor	795	54/7	0.121	0.121	0.364	1.092	1,023	28,200	0.022	0.027	889	1-838
Mallard	795	30/19	0.163	0.098	0.488	1.140	1,233	38,400	0.021	0.026	918	1-757
Ruddy	900	45/7	0.141	0.094	0.283	1.131	1,013	24,400	0.019	0.024	958	1-955
Canary	900	54/7	0.129	0.129	0.387	1.162	1,158	31,900	0.019	0.024	961	1-838
Rail	954	45/7	0.146	0.097	0.291	1.165	1,074	25,900	0.018	0.023	993	1-955
Cardinal	954	54/7	0.133	0.133	0.399	1.196	1,227	33,800	0.018	0.023	996	1-838
Ortolan	1033.5	45/7	0.152	0.101	0.303	1.212	1,163	27,700	0.017	0.021	1043	1-957
Curlew	1033.5	54/7	0.138	0.138	0.415	1.245	1,330	36,600	0.017	0.021	1047	1-838
Bluejay	1113	45/7	0.157	0.105	0.315	1.258	1,253	29,800	0.016	0.019	1092	1-957
Finch	1113	54/19	0.144	0.086	0.431	1.292	1,429	39,100	0.015	0.020	1093	1-1009
Bunting	1192.5	45/7	0.163	0.109	0.326	1.302	1,342	32,000	0.014	0.018	1139	1-957
Grackle	1192.5	54/19	0.149	0.089	0.446	1.337	1,531	41,900	0.014	0.018	1140	1-1009
Bittern	1272	45/7	0.168	0.112	0.336	1.345	1,432	34,100	0.014	0.017	1184	1-957
Pheasant	1272	54/19	0.154	0.092	0.461	1.381	1,633	34,600	0.014	0.017	1187	1-1009
Dipper	1351.5	45/7	0.173	0.116	0.347	1.386	1,521	36,200	0.013	0.016	1229	1-957
Martin	1351.5	54/19	0.158	0.095	0.475	1.424	1,735	46,300	0.013	0.016	1232	1-1009
Bobolink	1431	45/7	0.178	0.119	0.357	1.427	1,611	38,300	0.012	0.015	1272	1-957
Lapwing	1590	45/7	0.188	0.125	0.376	1.504	1,790	42,200	0.011	0.014	1354	1-1019
Falcon	1590	54/19	0.172	0.103	0.515	1.544	2,041	54,500	0.011	0.014	1359	1-1009
Chukar	1780	84/19	0.146	0.087	0.437	1.602	2,071	51,000	0.010	0.013	1453	1-1020
Bluebird	2156	84/19	0.160	0.096	0.481	1.762	2,509	60,300	0.008	0.011	1623	1-020
Kiwi	2167	72/7	0.174	0.116	0.347	1.735	2,300	49,800	0.008	0.011	1607	1-1053

Note: Conductor temperature at 75°, ambient temperature 25°C, emissivity 0.5, wind 2 ft/sec, in sun.

© 2011, AFL, all rights reserved. PP-3-00069, Revision 6, 3.29.2023
Specifications are subject to change without notice.

Conductor Information for AAC Conductors

Code Name	Size	Stranding	Diameter (inches)	Weight per 1000 ft	Rated Strength	Resistance OHMS per 1000 ft		Allowable Ampacity[1]	SAG10® Chart Number
	kcmil	Al	Complete Cable	lbs	lbs	DC @ 20°C	AC @ 75°C	Amps	
Peachbell	6	7	0.184	25	563	0.658	0.805	103	1-918
Rose	4	7	0.232	39	881	0.414	0.506	138	1-918
Iris	2	7	0.292	62	1,350	0.260	0.318	185	1-918
Pansy	1	7	0.328	78	1,640	0.207	0.252	214	1-918
Poppy	1/0	7	0.368	99	1,990	0.164	0.200	247	1-918
Aster	2/0	7	0.414	125	2,510	0.130	0.159	286	1-918
Phlox	3/0	7	0.464	157	3,040	0.103	0.126	331	1-918
Oxlip	4/0	7	0.522	198	3,830	0.082	0.100	383	1-918
Sneezewort	250.0	7	0.567	234	4,520	0.069	0.085	425	1-918
Valerian	250.0	19	0.574	234	4,660	0.069	0.085	426	1-945
Daisy	266.8	7	0.586	250	4,830	0.065	0.079	443	1-918
Laurel	266.8	19	0.592	250	4,970	0.065	0.079	444	1-945
Peony	300.0	19	0.628	281	5,480	0.058	0.071	478	1-945
Tulip	336.4	19	0.665	315	6,150	0.051	0.063	513	1-945
Daffodil	350.0	19	0.679	328	6,390	0.049	0.061	526	1-945
Canna	397.5	19	0.723	373	7,110	0.044	0.053	570	1-945
Goldentuft	450.0	19	0.769	422	7,890	0.038	0.043	616	1-945
Cosmos	477.0	19	0.792	447	8,360	0.036	0.045	639	1-945
Syringa	477.0	37	0.795	447	8,690	0.036	0.045	639	1-1049
Zinnia	500.0	19	0.811	469	8,760	0.035	0.043	658	1-945
Hyacinth	500.0	37	0.814	469	9,110	0.035	0.043	658	1-1049
Dahlia	556.5	19	0.856	522	9,750	0.031	0.038	703	1-945
Mistletoe	556.5	37	0.858	522	9,940	0.031	0.038	704	1-1049
Meadowsweet	600.0	37	0.891	562	10,700	0.023	0.036	738	1-1049
Orchid	636.0	37	0.918	596	11,400	0.027	0.036	765	1-1049
Heuchera	650.0	37	0.928	609	11,600	0.027	0.033	775	1-1049
Verbena	700.0	37	0.963	656	12,500	0.025	0.031	812	1-1049
Flag	700.0	61	0.964	656	12,900	0.025	0.031	812	1-1010
Violet	715.5	37	0.973	671	12,800	0.024	0.030	823	1-1049
Nasturtium	715.5	61	0.975	671	13,100	0.024	0.030	823	1-1010
Petunia	750.0	37	0.997	703	13,100	0.023	0.029	847	1-1049
Cattail	750.0	61	0.998	703	13,500	0.023	0.029	847	1-1010
Arbutus	795.0	37	1.026	745	13,900	0.022	0.027	878	1-1049
Lilac	795.0	61	1.027	745	14,300	0.022	0.027	879	1-1010
Cockscomb	900.0	37	1.092	844	15,400	0.019	0.024	948	1-1049

© 2011, AFL, all rights reserved. PP-3-00069, Revision 6, 3.29.2023
Specifications are subject to change without notice.

Conductor Information for AAC Conductors
(continued)

Code Name	Size	Stranding	Diameter (inches)	Weight per 1000 ft	Rated Strength	Resistance OHMS per 1000 ft		Allowable Ampacity[1]	SAG10® Chart Number
	kcmil	Al	Complete Cable	lbs	lbs	DC @ 20°C	AC @ 75°C	Amps	
Snapdragon	900.0	61	1.093	844	15,900	0.019	0.024	948	1-1010
Magnolia	954.0	37	1.124	894	16,400	0.018	0.023	982	1-1049
Goldenrod	954.0	61	1.125	894	16,900	0.018	0.023	983	1-1010
Hawkweed	1000.0	37	1.151	937	17,200	0.017	0.022	1,010	1-1049
Camellia	1000.0	61	1.152	937	17,700	0.071	0.022	1,011	1-1010
Bluebell	1033.5	37	1.170	969	17,700	0.017	0.021	1,031	1-1049
Larkspur	1033.5	61	1.171	969	18,300	0.017	0.021	1,032	1-1010
Marigold	113.0	61	1.216	1,043	19,700	0.016	0.020	1,079	1-1010
Hawthorn	1192.5	61	1.258	1,118	21,100	0.015	0.018	1,124	1-1010
Narcissus	1272.0	61	1.300	1,192	22,000	0.014	0.017	1,169	1-1010
Columbine	1351.5	61	1.340	1,267	23,400	0.013	0.016	1,212	1-1010
Carnation	1431.0	61	1.378	1,341	24,300	0.012	0.016	1,253	1-1010
Gladiolus	1510.5	61	1.416	1,416	25,600	0.014	0.015	1,294	1-1010
Coreopsis	1590.0	61	1.453	1,490	27,000	0.011	0.014	1,333	1-1010
Jessamine	1750.0	61	1.524	1,640	29,700	0.010	0.013	1,408	1-1010
Cowslip	2000.0	91	1.631	1,875	34,200	0.009	0.012	1,518	1-1157
Sagebrush	2250.0	91	1.730	2,130	37,500	0.008	0.011	1,612	1-1157
Lupine	2500.0	91	1.823	2,366	41,900	0.007	0.010	1,706	1-1157
Bitterroot	2750.0	91	1.912	2,603	46,100	0.006	0.009	1,793	1-1157
Trillium	3000.0	127	1.998	2,839	50,300	0.006	0.008	1,874	1-1032
Blubonnet	3500.0	127	2.158	3,345	58,700	0.005	0.008	2,024	1-1032

Note: Conductor temperature at 75°, ambient temperature 25°C, emissivity 0.5, wind 2 ft/sec, in sun.

© 2011, AFL, all rights reserved. PP-3-00069, Revision 6, 3.29.2023
Specifications are subject to change without notice.

Conductor Information for AAAC Conductors

Code Name	Size	Stranding	Diameter	Weight per 1000 ft	Rated Strength	Resistance OHMS per 1000 ft		Allowable Ampacity[1]	SAG10® Chart Number
	kcmil	Al	in	lbs	lbs	DC @ 20°C	AC @ 75°C	Amps	
Akron	30.58	7	0.198	29	1,110	0.659	0.785	107	1-1068
Alton	48.69	7	0.250	45	1,760	0.414	0.493	143	1-1068
Ames	77.47	7	0.316	72	2,800	0.260	0.310	191	1-1068
Azusa	123.3	7	0.398	115	4,460	0.163	0.195	256	1-1068
Anaheim	155.4	7	0.447	145	5,390	0.130	0.154	296	1-1068
Amherst	195.7	7	0.502	183	6,790	0.103	0.123	342	1-1068
Alliance	246.9	7	0.563	230	8,560	0.082	0.097	395	1-1068
Butte	312.8	19	0.642	292	11,000	0.064	0.077	460	1-1056
Canton	394.5	19	0.720	368	13,300	0.051	0.061	532	1-1056
Cairo	465.4	19	0.783	434	15,600	0.043	0.052	590	1-1056
Darien	559.5	19	0.858	522	18,800	0.036	0.043	663	1-1056
Elgin	652.4	19	0.927	608	21,900	0.031	0.037	729	1-1056
Flint	740.8	37	0.990	691	24,400	0.027	0.033	790	1-1155
Greeley	927.2	37	1.108	865	30,500	0.022	0.026	908	1-1155

Note: Conductor temperature at 75°, ambient temperature 25°C, emissivity 0.5, wind 2 ft/sec, in sun.

© 2011, AFL, all rights reserved. PP-3-00069, Revision 6, 3.29.2023
Specifications are subject to change without notice.

Conductor Information for ACAR Conductors

Size	Stranding	Diameter (inches)	Weight per 1000 ft	Rated Strength	Resistance OHMS per 1000 ft		Allowable Ampacity[1]	SAG10® Chart Number
kcmil	AAC/AAAC	Complete Cable OD	lbs	lbs	DC @ 20°C	AC @ 75°C	Amps	
355.0	12/7	0.683	332	8,500	0.051	0.062	519	1-1196
465.9	12/7	0.783	436	11,000	0.039	0.048	616	1-1196
503.6	12/7	0.814	471	11,900	0.036	0.044	646	1-1196
653.1	12/7	0.927	611	15,400	0.028	0.034	760	1-1196
739.8	30/7	0.990	693	15,300	0.024	0.030	831	1-1203
739.8	18/19	0.990	692	18,800	0.025	0.031	814	1-1206
853.7	30/7	1.063	799	17,500	0.021	0.026	907	1-1203
853.7	18/19	1.063	798	21,500	0.022	0.027	890	1-1206
927.2	30/7	1.108	868	19,000	0.019	0.024	955	1-1203
927.2	18/19	1.108	867	23,400	0.020	0.025	936	1-1206
1024.5	30/7	1.165	959	20,900	0.017	0.022	1,015	1-1203
1024.5	18/19	1.165	958	25,800	0.018	0.023	995	1-1206
1081.0	30/7	1.196	1,012	22,100	0.016	0.021	1,048	1-1203
1081.0	18/19	1.196	1,011	27,200	0.017	0.021	1,028	1-1206
1109.0	30/7	1.212	1,038	22,700	0.016	0.020	1,065	1-1203
1109.0	18/19	1.212	1,037	27,900	0.017	0.021	1,044	1-1206
1172.0	30/7	1.246	1,097	24,000	0.015	0.019	1,101	1-1203
1172.0	18/19	1.246	1,096	29,500	0.016	0.020	1,080	1-1206
1197.0	30/7	1.259	1,121	24,500	0.015	0.019	1,115	1-1203
1197.0	18/19	1.259	1,119	30,200	0.016	0.019	1,094	1-1206
1280.0	30/7	1.302	1,199	26,200	0.014	0.018	1,160	1-1203
1280.0	18/19	1.302	1,197	32,200	0.015	0.018	1,139	1-1206
1361.0	42/19	1.344	1,274	30,300	0.013	0.017	1,196	1-1125
1527.0	42/19	1.424	1,429	33,600	0.012	0.015	1,314	1-1125
1703.0	42/19	1.504	1,594	37,500	0.011	0.014	1,363	1-1125
1933.0	42/19	1.602	1,809	42,500	0.009	0.012	1,465	1-1125
2267.0	42/19	1.735	2,142	49,900	0.008	0.011	1,594	1-1125
2339.0	42/19	1.762	2,210	51,500	0.008	0.011	1,622	1-1125
2493.0	72/19	1.821	2,357	50,400	0.007	0.010	1,687	1-1235
2493.0	54/37	1.821	2,355	57,600	0.007	0.010	1,670	1-1105

Note: Conductor temperature at 75°, ambient temperature 25°C, emissivity 0.5, wind 2 ft/sec, in sun.

© 2011, AFL, all rights reserved. PP-3-00069, Revision 6, 3.29.2023
Specifications are subject to change without notice.

General Information—Thermal Expansion

Aluminum Tubular Bus Conductor

Length		Temperature Change °C[1]									
		10°		20°		30°		40°		50°	
		Change in Length									
ft	m	in	mm	in	mm	in	mm	in	mm	in	mm
10	3.05	0.028	0.7	0.055	1.4	0.083	2.1	0.11	2.8	0.138	3.5
20	6.1	0.055	1.4	0.110	2.8	0.166	4.2	0.221	5.6	0.276	7.0
30	9.14	0.083	2.1	0.166	4.2	0.284	6.3	0.331	8.4	0.414	10.5
40	12.19	0.110	2.8	0.221	5.6	0.331	8.4	0.442	11.2	0.552	14.0
50	15.24	0.138	3.5	0.276	7.0	0.414	10.5	0.552	14.0	0.69	17.5
60	18.29	0.166	4.2	0.331	8.4	0.497	12.6	0.662	16.8	0.828	21.0
70	21.34	0.192	4.9	0.386	9.8	0.580	14.7	0.773	19.6	0.966	24.5
80	24.38	0.221	5.6	0.442	11.2	0.662	16.8	0.883	22.4	1.104	28.0
90	27.43	0.248	6.3	0.497	12.6	0.745	18.9	0.994	25.2	1.242	31.5
100	30.48	0.276	7.0	0.522	14.0	0.828	21.0	1.104	28.0	1.38	35.0

Length		Temperature Change °C[1]									
		60°		70°		80°		90°		100°	
		Change in Length									
ft	m	in	mm	in	mm	in	mm	in	mm	in	mm
10	3.05	0.166	4.2	0.193	4.9	0.221	5.6	0.248	6.3	0.276	7.0
20	6.1	0.331	8.4	0.386	9.8	0.442	11.2	0.497	12.6	0.552	14.0
30	9.14	0.497	12.6	0.580	14.7	0.662	16.8	0.745	18.9	0.828	21.0
40	12.19	0.662	16.8	0.773	19.6	0.883	22.4	0.994	25.2	1.104	28.0
50	15.24	0.828	21.0	0.966	24.5	1.104	28.0	1.242	31.5	1.38	35.1
60	18.29	0.994	25.2	1.159	29.4	1.325	33.7	1.49	37.8	1.656	42.1
70	21.34	1.159	29.4	1.352	34.3	1.546	39.3	1.739	44.2	1.932	49.1
80	24.38	1.325	33.7	1.546	39.3	1.766	44.9	1.987	50.5	2.208	56.1
90	27.43	1.49	37.8	1.739	44.2	1.987	50.5	2.236	56.8	2.484	63.1
100	30.48	1.656	42.1	1.932	49.1	2.208	56.1	2.484	63.1	2.76	70.1

1. Coefficient of thermal expansion for tubular bus conductor is 0.000023 per unit length per °C.

© 2011, AFL, all rights reserved. PP-3-00069, Revision 6, 3.29.2023
Specifications are subject to change without notice.

General Information—Expansion, Coupler and Support

Typical Bolted & Welded Types (Welded Type shown)

The expansion space (Dimension "D" on illustration) provided for expansion supports and couplers is based on an installation temperature of 68˚F (20˚C) and an operating temperature range between 200˚F (93˚C) maximum and -20˚F (-29˚C) minimum.

The temperature range is based on a maximum run length between fixed supports of 80 ft. (24.4m) for 3/4" thru 1-1/2" NPS and 150 ft. (45.7m) for 2" thru 6" NPS. Assembly dimensions are based on expansion support or expansion coupler being centered between fixed supports.

Spaces provided for expansion, based on an installation temperature of 68˚F (20˚C) are 1.75" (44.5mm) for 3/4" thru 1-1/2" NPS and 3.25" (82.6mm) for 2" thru 6" NPS. Installation dimensions must be altered to compensate for installation temperatures other than 68˚F (20˚C) which affects space provided for expansion ("D" on illustration) by using graph shown below.

Expansion Support

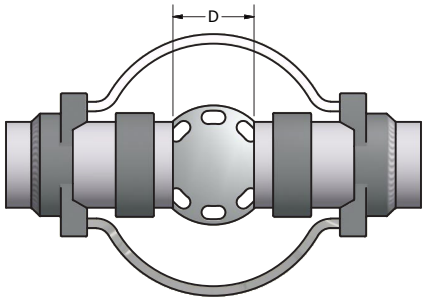

Expansion Coupler

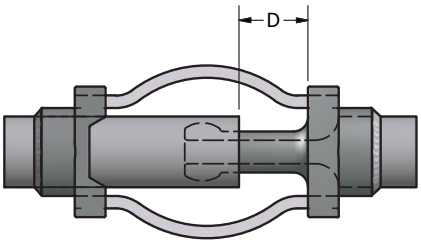

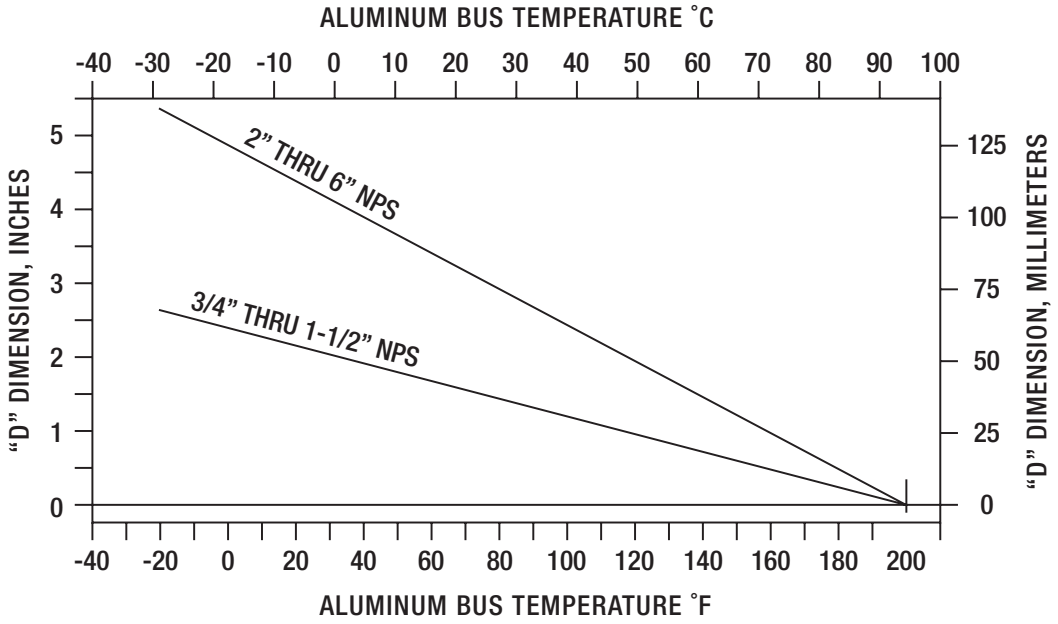

© 2011, AFL, all rights reserved. PP-3-00069, Revision 6, 3.29.2023
Specifications are subject to change without notice.

General Information—Expansion Terminal

Typical Bolted and Welded Types (Welded Type shown)

The expansion space (Dimension "D" on illustration) provided for expansion terminals is based on an installation temperature of 68°F (20°C) and an operating temperature range between 200°F (93°C) maximum and -20°F (-29°C) minimum.

The temperature range is based on a maximum run length between fixed support and terminal of 60 ft. (18.3 m) for 3/4" through 1-1/2" NPS and 100 ft. (30.5 m) for 2" through 6" NPS.

Spaces provided for expansion based on an installation temperature of 68°F (20°C) are 1.30" (33 mm) for 3/4" through 1-1/2" NPS and 2.25" (57 mm) for 2" through 6" NPS. Installation dimensions must be altered to compensate for installation temperatures other than 68°F (20°C) which affects space provided for expansion ("D" on illustration) by using graph shown at right.

Terminal

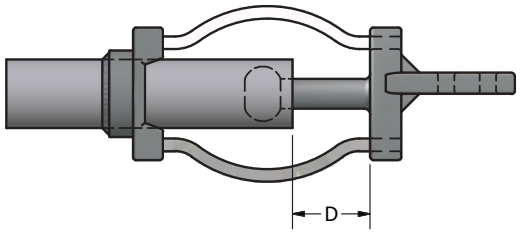

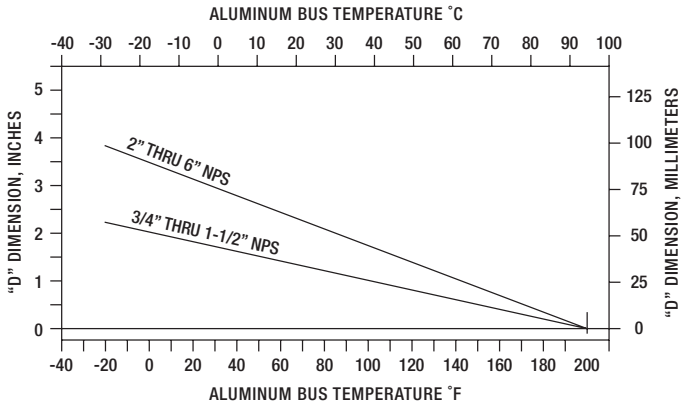

General Information—Bronze Expansion Terminal

The expansion space (Dimension "D" on illustration) provided for expansion terminals is based on an installation temperature of 68°F (20°C) and an operating temperature range between 200°F (93°C) maximum and -20°F (-29°C) minimum.

The temperature range is based on a maximum run length between fixed support and terminal of 60 ft. (18.3 m) for 3/4" thruough1-1/2" NPS and 100 ft. (30.5 m) for 2" through 6" NPS.

Spaces provided for expansion of bronze terminals based on an installation temperature of 68°F (20°C) are 0.88" (22 mm) for 3/4" through 1-1/2" NPS and 1.5" (38 mm) for 2" through 6" NPS. Installation dimensions must be altered to compensate for installation temperatures other than 68°F (20°C) which affects space provided for expansion ("D" on illustration) by using graph shown at right.

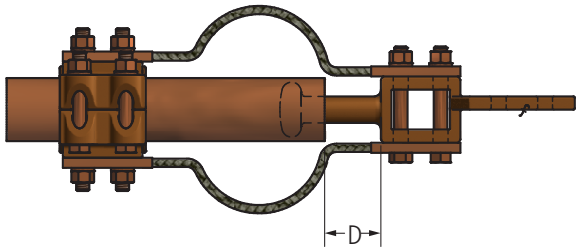

Bronze Terminal

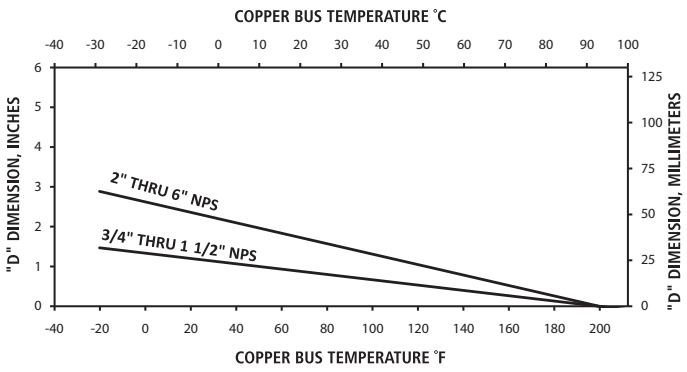

© 2011, AFL, all rights reserved. PP-3-00069, Revision 6, 3.29.2023
Specifications are subject to change without notice.

General Information—Standard Pipe Size
Nominal Dimensions & Weight

Aluminum

Nominal Pipe Size Inches	Diameter		Wall Thickness	Wall Area	Weight
	Outside	Inside			
	in	in	in	in²	lb/ft
ASA SCHEDULE 40 PIPE (Standard Pipe Size)					
1	1.315	1.049	0.133	0.494	0.581
1 - 1/4	1.660	1.380	0.140	0.668	0.786
1 - 1/2	1.900	1.610	0.145	0.800	0.940
2	2.375	2.067	0.154	1.074	1.264
2 -1/2	2.875	2.469	0.203	1.704	2.004
3	3.500	3.068	0.216	2.228	2.621
3 -1/2	4.000	3.548	0.226	2.680	3.151
4	4.500	4.026	0.237	3.174	3.733
5	5.563	5.047	0.258	4.300	5.057
6	6.625	6.065	0.280	5.581	6.564
8	8.625	7.981	0.322	8.399	9.878
ASA SCHEDULE 80 PIPE (Extra-Heavy Pipe Size)					
1	1.315	0.957	0.179	0.639	0.751
1 - 1/4	1.660	1.278	0.191	0.881	1.037
1 - 1/2	1.900	1.500	0.200	1.068	1.256
2	2.375	1.939	0.218	1.477	1.737
2 -1/2	2.875	2.323	0.276	2.254	2.650
3	3.500	2.900	0.300	3.016	3.547
3 -1/2	4.000	3.364	0.318	3.678	4.326
4	4.500	3.826	0.337	4.407	5.183
5	5.563	4.813	0.375	6.112	7.188
6	6.625	5.761	0.432	8.405	9.884
8	8.625	7.625	0.500	12.763	15.008

Copper

Nominal Pipe Size Inches	Diameter		Wall Thickness	Wall Area	Weight
	Outside	Inside			
	in	in	in	in²	lb/ft
ASA SCHEDULE 40 PIPE (Standard Pipe Size)					
1	1.315	1.062	0.127	0.472	1.830
1 - 1/4	1.660	1.368	0.146	0.694	2.680
1 - 1/2	1.900	1.600	0.150	0.825	3.190
2	2.375	2.062	0.157	1.091	4.210
2 - 1/2	2.875	2.500	0.188	1.583	6.120
3	3.500	3.062	0.219	2.257	8.720
3 - 1/2	4.000	3.500	0.250	2.945	11.380
4	4.500	4.000	0.250	3.338	12.900
4 - 1/2	5.000	4.500	0.250	3.731	14.420
5	5.563	5.063	0.250	4.173	16.120
6	6.625	6.125	0.250	5.007	19.350
ASA SCHEDULE 80 PIPE (Extra-Heavy Pipe Size)					
1	1.315	0.951	0.182	0.648	2.510
1 - 1/4	1.660	1.272	0.194	0.839	3.460
1 - 1/2	1.900	1.494	0.203	1.080	4.190
2	2.375	1.933	0.221	1.490	5.790
2 - 1/2	2.875	2.315	0.280	2.290	8.840
3	3.500	2.892	0.304	3.050	11.820
3 - 1/2	4.000	3.358	0.321	3.710	14.370
4	4.500	3.818	0.341	4.450	17.250
5	5.563	4.813	0.375	6.110	23.670
6	6.625	5.751	0.437	8.490	32.930
8	8.625	7.625	0.500	12.760	49.420

© 2011, AFL, all rights reserved. PP-3-00069, Revision 6, 3.29.2023
Specifications are subject to change without notice.

General Information—Bus Conductors
Deflection & Stress Formulas

	Simple Beam	Beam fixed at both ends	Continuous Beam	
			2 Spans	More than 2 Spans
Maximum Deflection ⑤	$D = \frac{5wl^4}{384EI}$	$D = \frac{wl^4}{384EI}$	$D = \frac{wl^4}{185EI}$	①
Maximum Moment	$M = \frac{wl^2}{8}$ ②	$M = \frac{wl}{12}$ ③	$M = \frac{wl^2}{8}$ ④	$M = 0.107wl^2$ ④
Fiber Stress	$f^1 = \frac{wl^2}{8S}$ ②	$f^1 = \frac{wl^2}{12S}$ ③	$f^1 = \frac{wl^2}{8S}$ ④	$f^1 = \frac{0.107wl^2}{S}$ ④
Maximum Load	$W = \frac{8fS}{l}$	$W = \frac{12fS}{l}$	$W = \frac{8fS}{l}$	$W = \frac{fS}{0.1071}$
Maximum Span	$l = \sqrt{\frac{8fS}{w}}$	$l = \sqrt{\frac{12fS}{w}}$	$l = \sqrt{\frac{8fS}{w}}$	$l = \sqrt{\frac{fS}{0.107w}}$

D = deflection in inches

w = load in lb/in. of length $\frac{\text{lbs. per ft}}{12}$

W = total uniform load in pounds (wl)

l = span in inches

E = modulus of elasticity, lb/sq in.

I = moment of inertia, inches ④

M = bending moment in pounds - inches

S = section modulus, inches ②

f^1 = fiber stress in lb/sq in.

f = maximum allowable fiber stress in lb/sq in. (The value of minimum yield strength is commonly used.)

① Maximum deflection occurs in the end spans and is only slightly more than that for a continuous beam of 2 spans.
② Maximum moment and fiber stress for simple beams occur at the center of the span.
③ Maximum moment and fiber stress for beams fixed ath both ends occur at the points of support.
④ Maximum moment and fiber stress for continuous beams occur at the second support from each end.
⑤ See page S-1 11

© 2011, AFL, all rights reserved. PP-3-00069, Revision 6, 3.29.2023
Specifications are subject to change without notice.

General Information—Deflection Values
ASA Schedule 40 Aluminum Pipe

CONDITIONS	Nominal Pipe Size (in)	SPAN (ft)													
		20		25		30		35		40		45		50	
		DEFLECTION ①②													
		in	mm	in	mm	in	mm	in	mm	in	mm	in	mm	in	mm
Bare Conductor (No Wind or Ice)	1	2.39	61	—	—	—	—	—	—	—	—	—	—	—	—
	1 1/4	1.45	37	3.54	90	—	—	—	—	—	—	—	—	—	—
	1 1/2	1.09	28	2.66	68	—	—	—	—	—	—	—	—	—	—
	2	0.68	17	1.67	42	3.45	88	—	—	—	—	—	—	—	—
	2 1/2	0.47	12	1.15	29	2.38	61	4.42	112	—	—	—	—	—	—
	3	0.31	8	0.76	19	1.58	40	2.93	74	4.99	127	—	—	—	—
	3 1/2	0.24	6	0.58	15	1.20	30	2.22	56	3.78	96	6.06	154	—	—
	4	0.19	5	0.45	11	0.94	24	1.74	44	2.97	75	4.75	121	7.24	184
	5	0.12	3	0.29	7	0.61	15	1.12	29	1.92	49	3.07	78	4.68	119
	6	0.08	2	0.20	5	0.42	11	0.79	20	1.34	34	2.15	55	3.27	83
	8	0.05	1	0.12	3	0.25	6	0.46	12	0.78	20	1.25	32	1.91	49
1/2-in Ice (13 mm)	1	7.03	179	—	—	—	—	—	—	—	—	—	—	—	—
	1 1/4	3.93	100	9.59	244	—	—	—	—	—	—	—	—	—	—
	1 1/2	2.82	72	6.88	175	—	—	—	—	—	—	—	—	—	—
	2	1.65	42	4.02	102	8.34	212	—	—	—	—	—	—	—	—
	2 1/2	0.96	24	2.35	60	4.88	124	9.04	230	—	—	—	—	—	—
	3	0.61	15	1.49	38	3.08	78	5.71	145	9.73	247	—	—	—	—
	3 1/2	0.45	11	1.09	28	2.26	57	4.19	106	7.14	181	11.44	291	—	—
	4	0.34	9	0.83	21	1.72	44	3.19	81	5.44	138	8.71	221	13.28	337
	5	0.21	5	0.51	13	1.06	27	1.96	50	3.35	85	5.36	136	8.17	208
	6	0.14	4	0.34	9	0.71	18	1.32	33	2.25	57	3.60	91	5.48	139
	8	0.08	2	0.19	5	0.39	10	0.72	18	1.23	31	1.98	50	3.01	76
1/2-in (13 mm) Ice 4-psf (1,8 Kg/m²) Wind plus NESC constant	1	8.95	227	—	—	—	—	—	—	—	—	—	—	—	—
	1 1/4	4.81	122	11.74	298	—	—	—	—	—	—	—	—	—	—
	1 1/2	3.38	86	8.26	210	—	—	—	—	—	—	—	—	—	—
	2	1.92	49	4.68	119	9.71	247	—	—	—	—	—	—	—	—
	2 1/2	1.08	27	2.64	67	5.47	139	10.14	257	—	—	—	—	—	—
	3	0.67	17	1.63	42	3.39	86	6.28	160	10.72	272	—	—	—	—
	3 1/2	0.49	12	1.19	30	2.46	63	4.56	116	7.78	198	12.46	316	—	—
	4	0.37	9	0.90	23	1.86	47	3.44	87	5.87	149	9.40	239	14.33	364
	5	0.22	6	0.54	14	1.13	29	2.09	53	3.56	90	5.71	145	8.70	221
	6	0.15	4	0.36	9	0.75	19	1.39	35	2.37	60	3.79	96	5.78	147
	8	0.08	2	0.20	5	0.41	10	0.75	19	1.28	33	2.06	52	3.13	80
1-in Ice (25 mm)	1	14.23	361	—	—	—	—	—	—	—	—	—	—	—	—
	1 1/4	7.55	192	18.44	468	—	—	—	—	—	—	—	—	—	—
	1 1/2	5.27	134	12.87	327	—	—	—	—	—	—	—	—	—	—
	2	2.95	75	7.20	183	14.92	379	—	—	—	—	—	—	—	—
	2 1/2	1.60	41	3.91	99	8.11	206	15.03	382	—	—	—	—	—	—
	3	0.98	25	2.39	61	4.95	126	9.18	233	15.66	398	—	—	—	—
	3 1/2	0.70	18	1.72	44	3.56	90	6.59	167	11.25	286	18.02	458	—	—
	4	0.53	13	1.28	33	2.66	68	4.93	125	8.40	213	13.46	342	20.52	521
	5	0.31	8	0.76	19	1.59	40	2.94	75	5.01	127	8.03	204	12.24	311
	6	0.20	5	0.50	13	1.04	26	1.92	49	3.28	83	5.25	133	8.00	203
	8	0.11	3	0.26	7	0.55	14	1.02	26	1.73	44	2.78	70	4.23	107

① These are maximum deflection values for a simple beam with uniformly distributed load. For beams fixed at both ends the deflection will be 1/5 of the values given.

② Deflection $d1$ for any other span $L1$ may be obtained from relation:

$$d1 = d = \frac{(L1^4)}{(L^4)}$$

③ Referred to in product tables as "SPS"

© 2011, AFL, all rights reserved. PP-3-00069, Revision 6, 3.29.2023
Specifications are subject to change without notice.

General Information—Deflection Values

ASA Schedule 80 Aluminum Pipe

CONDITIONS	Nominal Pipe Size (in)	SPAN (ft)													
		20		25		30		35		40		45		50	
		DEFLECTION ①②													
		in	mm	in	mm	in	mm	in	mm	in	mm	in	mm	in	mm
Bare Conductor (No Wind or Ice)	1	2.39	61	—	—	—	—	—	—	—	—	—	—	—	—
	1 1/4	1.45	37	3.54	90	—	—	—	—	—	—	—	—	—	—
	1 1/2	1.09	28	2.66	68	—	—	—	—	—	—	—	—	—	—
	2	0.68	17	1.67	42	3.45	88	—	—	—	—	—	—	—	—
	2 1/2	0.47	12	1.15	29	2.38	61	4.42	112	—	—	—	—	—	—
	3	0.31	8	0.76	19	1.58	40	2.93	74	4.99	127	—	—	—	—
	3 1/2	0.24	6	0.58	15	1.20	30	2.22	56	3.78	96	6.06	154	—	—
	4	0.19	5	0.45	11	0.94	24	1.74	44	2.97	75	4.75	121	7.24	184
	5	0.12	3	0.29	7	0.61	15	1.12	29	1.92	49	3.07	78	4.68	119
	6	0.08	2	0.20	5	0.42	11	0.79	20	1.34	34	2.15	55	3.27	83
	8	0.05	1	0.12	3	0.25	6	0.46	12	0.78	20	1.25	32	1.91	49
1/2-in Ice (13 mm)	1	7.03	179	—	—	—	—	—	—	—	—	—	—	—	—
	1 1/4	3.93	100	9.59	244	—	—	—	—	—	—	—	—	—	—
	1 1/2	2.82	72	6.88	175	—	—	—	—	—	—	—	—	—	—
	2	1.65	42	4.02	102	8.34	212	—	—	—	—	—	—	—	—
	2 1/2	0.96	24	2.35	60	4.88	124	9.04	230	—	—	—	—	—	—
	3	0.61	15	1.49	38	3.08	78	5.71	145	9.73	247	—	—	—	—
	3 1/2	0.45	11	1.09	28	2.26	57	4.19	106	7.14	181	11.44	291	—	—
	4	0.34	9	0.83	21	1.72	44	3.19	81	5.44	138	8.71	221	13.28	337
	5	0.21	5	0.51	13	1.06	27	1.96	50	3.35	85	5.36	136	8.17	208
	6	0.14	4	0.34	9	0.71	18	1.32	33	2.25	57	3.60	91	5.48	139
	8	0.08	2	0.19	5	0.39	10	0.72	18	1.23	31	1.98	50	3.01	76
1/2-in (13 mm) Ice 4-psf (1,8 Kg/m²) Wind plus NESC constant	1	8.95	227	—	—	—	—	—	—	—	—	—	—	—	—
	1 1/4	4.81	122	11.74	298	—	—	—	—	—	—	—	—	—	—
	1 1/2	3.38	86	8.26	210	—	—	—	—	—	—	—	—	—	—
	2	1.92	49	4.68	119	9.71	247	—	—	—	—	—	—	—	—
	2 1/2	1.08	27	2.64	67	5.47	139	10.14	257	—	—	—	—	—	—
	3	0.67	17	1.63	42	3.39	86	6.28	160	10.72	272	—	—	—	—
	3 1/2	0.49	12	1.19	30	2.46	63	4.56	116	7.78	198	12.46	316	—	—
	4	0.37	9	0.90	23	1.86	47	3.44	87	5.87	149	9.40	239	14.33	364
	5	0.22	6	0.54	14	1.13	29	2.09	53	3.56	90	5.71	145	8.70	221
	6	0.15	4	0.36	9	0.75	19	1.39	35	2.37	60	3.79	96	5.78	147
	8	0.08	2	0.20	5	0.41	10	0.75	19	1.28	33	2.06	52	3.13	80
1-in Ice (25 mm)	1	14.23	361	—	—	—	—	—	—	—	—	—	—	—	—
	1 1/4	7.55	192	18.44	468	—	—	—	—	—	—	—	—	—	—
	1 1/2	5.27	134	12.87	327	—	—	—	—	—	—	—	—	—	—
	2	2.95	75	7.20	183	14.92	379	—	—	—	—	—	—	—	—
	2 1/2	1.60	41	3.91	99	8.11	206	15.03	382	—	—	—	—	—	—
	3	0.98	25	2.39	61	4.95	126	9.18	233	15.66	398	—	—	—	—
	3 1/2	0.70	18	1.72	44	3.56	90	6.59	167	11.25	286	18.02	458	—	—
	4	0.53	13	1.28	33	2.66	68	4.93	125	8.40	213	13.46	342	20.52	521
	5	0.31	8	0.76	19	1.59	40	2.94	75	5.01	127	8.03	204	12.24	311
	6	0.20	5	0.50	13	1.04	26	1.92	49	3.28	83	5.25	133	8.00	203
	8	0.11	3	0.26	7	0.55	14	1.02	26	1.73	44	2.78	70	4.23	107

① These are maximum deflection values for a simple beam with uniformly distributed load. For beams fixed at both ends the deflection will be 1/5 of the values given.

② Deflection $d1$ for any other span $L1$ may be obtained from relation:

$$d1 = d = \frac{(L1^4)}{(L^4)}$$

③ Referred to in product tables as "EHPS"

© 2011, AFL, all rights reserved. PP-3-00069, Revision 6, 3.29.2023
Specifications are subject to change without notice.

General Information

General Welding Specification for Tubular Aluminum Bus Conductor

The following items cover key points that should be included in specifications for welding aluminum bus conductors. It is recommended that the references be reviewed in the preparation of proprietary welding specifications:

1. The welding process and all welding operations shall be qualified in accordance with the Aluminum Association, "Aluminum Construction Manual" Section 7.2.4 "Qualification of Welding Procedure and Welding"

2. All joints to be welded shall be free of moisture and hydrocarbon. Moisture can be removed thermally but the temperature applied shall not exceed 250°F (121°C). Degreasing shall be done with a non-toxic solvent so as to leave a minimum of residual on the parts. Sufficient time must be allowed for evaporation of the solvent prior to welding. Wire brushing with a stainless steel wire brush should be employed after solvent cleaning to remove thick heat-treat oxide films, water stains, etc., to permit optimum fusion and soundness of the weld.

3. All welds shall be made by the gas metal-arc (MIG) or the gas tungsten-arc (TIG) welding process. Reversed-polarity direct current shall be used for MIG welding, whereas alternating current shall be used for TIG welding. The shielding gas shall be welding grade argon, helium, or a mixture of the two. Filler alloy 4043 shall be used.

4. The working area should be substantially draft free and should be protected from atmospheric contamination.

5. All welds shall be made with clean metal and the completed weld shall have a smooth finish and shall indicate good fusion with parent metal. Preheating of parts prior to welding shall not exceed 250°F (121°C).

6. All connections shall be checked before, during and after the weld is made. Before the weld is begun, visually inspect the connection to determine proper edge preparation and alignment. During the weld, maintain a smooth and continuous flow of metal into the joint and maintain a constant current setting on the welding station. When several passes are to be made, check the previous pass before laying down the next one to enable detection of poor fusion or cracks.

Defective area shall be removed with a dry chisel prior to application of subsequent weld passes. After the weld has been completed, it shall be again visually inspected for quality and to determine if the weld bead is the correct size. The cross-sectional area of the weld should not be less than that of the smallest member being joined.

7. To repair a defective weld, the defective portion must be entirely removed by chipping or machining. The area to be repaired must be smooth and free of dirt, or foreign matter. The repair weld then may be made in a similar manner as the original.

8. Members being joined should be tack welded in place to prevent misalignment during the welding process.

REFERENCES:

1. Aluminum Construction Manual, The Aluminum Association, Inc., 818 Connecticut Ave. N.W., Washington, D.C., 20006.
2. Recommended practices for Gas Shielded-Arc Welding of Aluminum and Aluminum Alloy Pipe, American Welding Society, Inc. 2501 N.W. 7th Street, Miami, Florida, 33125.
3. Welding Alcoa Aluminum, Aluminum Company of America, Pittsburgh Pennsylvania.
4. Guide for Welding Aluminum in Substation , IEEE Transactions, Power Apparatus and Systems (1967). Vol. 86,pp. 775-786

© 2011, AFL, all rights reserved. PP-3-00069, Revision 6, 3.29.2023
Specifications are subject to change without notice.

General Information—Hardware
Method for Determining Bolt Length

The following table is to be used for determining bolt length for bolting accessories together when hardware is ordered separately. Bolt length is determined as follows:

1) Determine "grip". This is the combined thickness of items bolted together. This does not include nuts, washers or pads.

2) Under "grip" column, find grip determined in Step 1. If grip falls between two thicknesses, use the larger to determine bolt length.

3) Read across to find bolt length required under "Bolt Length - No Cover".

4) If pad cover(s) are required, use columns "Bolt Length - One Cover" or "Bolt Length - Two Covers".

Note: The table is based on the following dimensions:

1/2 Nut	.44" (11mm) Thick
1/2" Flat Washer	.11" (3mm) Thick (Two washers required on each bolt)
Pad Cover	.25" (6mm) Thick

Grip		Bolt Length					
		No Cover		One Cover		Two Covers	
in	mm	in	mm	in	mm	in	mm
1.00	25	2.00	51	2.00*	51*	2.25*	57*
1.25	32	2.25	57	2.25*	57*	2.50*	64*
1.50	38	2.50	64	2.50*	64*	2.75*	70*
1.75	44	2.75	70	2.75*	70*	3.00*	76*
2.00	51	3.00	76	3.00	76	3.50	89
2.25	57	3.50	89	3.50*	89*	3.50*	89*
2.50	64	3.50	89	—	—	—	—
2.75	70	3.50*	89*	—	—	—	—

* Bolt and Nut are flush

© 2011, AFL, all rights reserved. PP-3-00069, Revision 6, 3.29.2023
Specifications are subject to change without notice.

General Information—Filler Compound (AFC)
Required for Compression Accessories

Catalog Series	2500		2600 2700 3400		2800		2900		3500		5000	
Die Size	lb	g	lb	g	lb	g	lb	g	lb	g	lb	g
30	.15	68	.13	59	.29	131	.42	191	.13	59	.19	86
34	.18	82	.15	68	.36	163	.51	231	.16	73	.25	113
36	.20	90	.16	73	.38	172	.54	245	.22	100	.28	127
38	.23	104	.19	86	.43	195	.62	281	.28	127	.35	159
40	.32	145	.27	122	.61	277	.88	399	.36	163	.40	181
42	.33	150	.28	127	.65	295	.93	422	.40	181	.54	245
44	.41	186	.33	150	.76	345	1.1	499	.40	181	.67	304
48	.61	277	.58	263	1.1	499	1.7	771	—	—	—	—

Catalog Series	5100 5600 5800		5300		5400		5500		7100 7200		8100 8200	
Die Size	lb	g	lb	g	lb	g	lb	g	lb	g	lb	g
30	.09	41	.32	145	.60	272	.42	191	.15	68	.47	213
34	.12	54	.41	186	.93	422	.53	240	.20	91	.56	254
36	.15	68	.52	236	.96	435	.68	308	.26	118	.62	281
38	.17	77	.58	263	1.1	499	.75	340	.27	122	.80	363
40	.20	91	.70	318	1.1	499	.91	413	.37	168	.90	408
42	.24	109	.84	381	1.4	635	1.1	499	.45	204	1.1	499
44	.28	127	1.2	544	1.5	680	1.6	726	.55	249	1.2	544
48	—	—	—	—	—	—	—	—	—	—	—	—

Notes:
1. The amount of AFC shown in the tabulation is for the purpose of estimating the amount of compound necessary for a consturction project. The tabulated weights of filler compound shown in the above table for the catalog 5100, 5600 and 5800 terminal does not include sufficient quanity to fill the cavity area at the transition of the barrel and flat pad. If the terminal is installed with the barrel in the upright position, it is imperative that an additional quantity of AFC be used to fill the cavity area.

© 2011, AFL, all rights reserved. PP-3-00069, Revision 6, 3.29.2023
Specifications are subject to change without notice.

General Information—Part Number Suffixes

Substation Suffix Codes	
A	ALLEN HEAD SOCKET SCREWS
AG	SILVER PLATED
B	BASE MOUNTING HARDWARE
BS	BOTH SIDES FINISHED (OLD AFL NUMBERS)
CA	BI-METALLIC TRANSISTION PLATE
CD	CADMIUM PLATED
CH	ANTI-CHATTER SPRING
CL	CLEVIS EYES WILL BE SUPPLIED WITH STRAIN CLAMP
CSBV	TERMINAL HARDWARE SHIELD WILL BE SUPPLIED WITH THE CONNECTOR
E	LIFTING EYE
EM	EVERDUR MOUNTING HARDWARE
F	TERMINAL PAD FINISH ON BOTH SIDES
G	JUMPER GUIDE
GS	GALVANIZED STEEL HARDWARE
H	HEX HEAD BOLTS
L	EXTRA LENGTH
LH	LESS HARDWARE
LMH	LESS MOUNTING HARDWARE
LN	LOCKWASHER AND NUT
LP	CONNECTOR GROOVES COATED WITH ALNOX AND ENCLOSED IN A POLYETHYLENE BAG
LPP	CONNECTOR GROOVES AND TERMINAL PAD ARE PRE-COATED WITH ALNOX & ENCLOSED IN A POLYETHYLENE BAG
MLB	Multi Link Braid
MT	MOISTURE SEAL
NK	NICKEL PLATED
NP	ITEM NORMALLY PLATED WILL BE SUPPLIED UNPLATED
P	PULLING EYE
NN	CONFINED PAD
R	CAPTIVE HEX HEAD BOLTS, ONE WRENCH INSTALLATION
S	SPECIAL CABLE RANGE & SPECIAL TERMINAL PAD
SN	TIN PLATED
SO	A SOCKET EYE WILL BE SUPPLIED WITH STRAIN CLAMP
SS	STAINLESS STEEL HARDWARE
SSM	STAINLESS STEEL MOUNTING HARDWARE
SW	SPLIT LOCKWASHER
T	THICKNESS OF BAR IS INDICATED BY THE NUMBER IMMEDIATELY FOLLOWING THE SUFFIX
TMH	TONGUE MOUNTING HARDWARE
TMHB	TONGUE MOUNTING HARDWARE, STAINLESS STEEL, & BELLEVILLE WASHER
TMHF	TONGUE MOUNTING HARDWARE WITH TWO FLAT SURFACES
TMHSS	TONGUE MOUNTING HARDWARE, STAINLESS STEEL
TO	UNTHREADED STUD
U	UNDRILLED TONGUE ON TERMINALS OR LUGS
WP	END PLUGS SUPPLIED WITH CONNECTOR
XX	NO OXIDE DIP
X	OXIDATION INHIBITOR

Compression Accessories Suffixes	
SS	STAINLESS STEEL HARDWARE
AL	ALUMINUM HARDWARE ON TERMINALS WHEN HARDWARE IS NOT NORMALLY SUPPLIED
P	PRE-FILLED WITH COMPOUND
HT	HIGH TEMPERATURE ACCESSORY
EHV	HIGH VOLTAGE APPLICATION ≤ 345 KV
NT	NO TERMINAL
NS	NON-SPECULAR FINISH
BNW	BOLT NUT WASHER

Suspension Units	
SC	SOCKET CLEVIS
SE	SOCKET EYE
BNC	BOLT NUT COTTER
YCE	Y CLEVIS EYE
YCE90	Y CLEVIS EYE 90

Stockbridge Dampers	
BA	BREAK-A-WAY BOLT

Notes:

1. The suffix designations above will not appear as part of the catalog number unless specifically requested, in which case there will be an extra charge to cover the stamping or marking operations.

2. When more than one suffix is required to designate more than one special feature, they should be arranged in alphabetical order.

© 2011, AFL, all rights reserved. PP-3-00069, Revision 6, 3.29.2023
Specifications are subject to change without notice.

Table of Contents

Bronze

Bronze Connectors Table of Contents . . . 21
Pictorial Index . . . 23

Bronze Bus Supports

Type AD . . . 31
Type CAP . . . 33
Type CBP . . . 34
Type CS . . . 35
Type CVSP . . . 36
Type HSSB, HSSC . . . 37
Type PA, PAP . . . 38
Type PB, PBP . . . 39
Type PL . . . 40
Type PLC . . . 41
Type PSC . . . 42
Type PSD, PSD-U . . . 43
Type PSRE . . . 44
Type PSS, PSS-CH . . . 45
Type PSSR, PSSR-CH . . . 46
Type PSV . . . 47
Type SBC . . . 48
Type SBS . . . 49
Type SAH, SAHD, SHH, SHHD . . . 50
Type SAV, SAVD, SHVD . . . 51
Type SAVS, SHVS . . . 52
Type SSHH, SSHHD . . . 53
Type XBC . . . 54

Bronze Couplers

Type CCV-S . . . 55
Type CP . . . 56
Type HC, HC-A . . . 57
Type RP . . . 58
Type RPCV-S . . . 60
Type UK, UKT . . . 61
Type UKR . . . 62
Type UP2K, UP4K . . . 63
Type UPK . . . 65

Bronze Braided or Laminated Expansion

Type CF-N (NEMA Pad Sizes) . . . 66
Type CF . . . 69
Type CFC . . . 71
Type LX . . . 72
Type XC, XCP, XBP . . . 73
Type XL . . . 75
Type XTP . . . 76
Type XTS . . . 78
Type XTSS, XTSS-N . . . 80

Bronze Elbows Tee & Vee Connectors

Type BCV-S . . . 81
Type BP, BPA-75, BPA-80 . . . 82
Type BPCV-S, BP2CV-S . . . 84
Type BPE . . . 86
Type EP . . . 88
Type PSK, PSKS . . . 89
Type PX . . . 90
Type U2T, UUTT . . . 91
Type UP2T . . . 93
Type UPT . . . 95
Type UT, UUT . . . 97
Type UTS . . . 99
Type VB . . . 100
Type VBPS . . . 101

Bronze Parallel, Cross, and Bar Taps

Type DGF, DGG . . . 102
Type DGM, DGN . . . 103
Type DSU, DSUS . . . 104
Type DSUN . . . 105
Type ES, ESS, ESSN . . . 106
Type GPEX . . . 107
Type GTV . . . 108
Type GTX . . . 110
Type PC . . . 111
Type Q2L, Q2L-E . . . 114
Type QL, QL-E . . . 115
Type TL, TL-E, T2L, T2L-E . . . 116
Type TRV . . . 117
Type UD . . . 118

Table of Contents

Bronze Parallel, Cross, and Bar Taps

Type UDV . . . 119
Type UM . . . 120
Type UP, UP-3 . . . 121
Type WC . . . 122

Bronze Connectors for Flat Bar

Type BS . . . 123
Type DH, DA . . . 124
Type HAF, H2AF, H3AF, H4AF . . . 125
Type HHF, H2HF, H3HF, H4HF . . . 127
Type HSS . . . 129

Bronze Grounding Connectors and Everdur Harware

Type EB . . . 130
Type EN, EW, ELW, EILW . . . 131
Type G110, G111, G114, G115 . . . 132
Type GA, GAA . . . 133
Type GAM . . . 134
Type GB, GBB . . . 135
Type GCF, GCG . . . 136
Type GD . . . 137
Type GF, GFM . . . 138
Type GG . . . 139
Type GH . . . 140
Type GK . . . 141
Type GL . . . 143
Type GPC . . . 144
Type GPF . . . 146
Type GPH-N . . . 147
Type GPH . . . 148
Type GR . . . 149
Type GS . . . 150
Type GW . . . 151
Type GX . . . 153
Type GZ . . . 154
Type MTRC, MTR2C, MTR3C . . . 156
Type Q2TE, Q3TE, Q4TE . . . 157
Type Q2TS, Q3TS, Q4TS . . . 159
Type TGC . . . 161

Bronze Stud Connectors

Type HSC, HS2C, HS3C . . . 162
Type HSC, HSC-90 . . . 164
Type NP, NF . . . 165
Type SCX, S2CX . . . 166
Type SP, SP-90 . . . 168
Type SX-A, SX-A-90 . . . 169
Type SX, SX-90, SXP . . . 170
Type US, U2S, US-90, U2S-90 . . . 172

Bronze Spacers

Type CASV . . . 174

Bronze Dead End Clamps

Type UD2E, UD2E-PG . . . 175

Bronze End Caps

Type CI, CI-E, CX . . . 176

Bronze Terminals, Taps

Type CFT . . . 177
Type CFTV-S . . . 178
Type D . . . 179
Type D2 . . . 180
Type HHL, HHL-A . . . 181
Type HL, HLA-45, HLA-90 . . . 183
Type HL, H2L, H3L, H4L . . . 185
Type HLB, H2LB . . . 187
Type HLS, HLSC . . . 189
Type PFTS . . . 190
Type Q2LB . . . 192
Type QLB, QLLB . . . 193
Type SCB-90H, SCB-90V . . . 195
Type SCB-F . . . 196
Type T2CVH, T2CVHA-45, T2CVHA-90 . . . 200
Type TCVH, TCVHA-30, TCVHA-45, TCVHA-90 . . . 202
Type TCX . . . 204
Type TP, TPA-30, TPA-45, TPA-60, TPA-90 . . . 205
Type TPC . . . 207
Type UL-90H . . . 208
Type UL-90V . . . 209
Type UL, U2L . . . 210
Type ULB, U2LB . . . 212
Type ULI, UULI . . . 214

Bronze Bus Supports

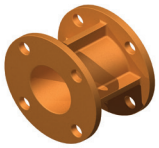	AD SERIES PG. 31
	CAP SERIES PG. 33
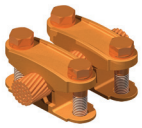	CBP SERIES PG. 34
	CS SERIES PG. 35
	CVSP SERIES PG. 36
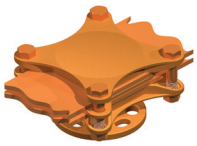	HSSB SERIES PG. 37
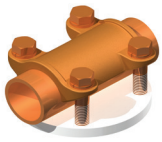	PA SERIES PG. 38
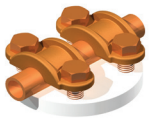	PB SERIES PG. 39
	PL SERIES PG. 40
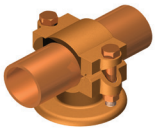	PLC SERIES PG. 41
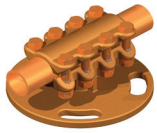	PSC SERIES PG. 42
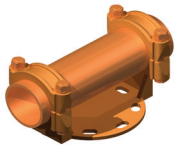	PSD SERIES PG. 43
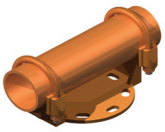	PSD-U SERIES PG. 43
	PSRE SERIES PG. 44
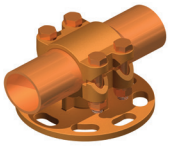	PSS SERIES PG. 45
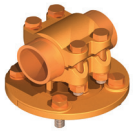	PSSR SERIES PG. 46
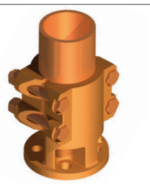	PSV SERIES PG. 47
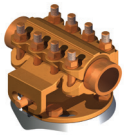	SBC SERIES PG. 48
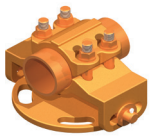	SBS SERIES PG. 49
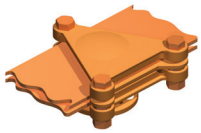	SAH SERIES PG. 50
	SHH SERIES PG. 50
	SAV SERIES PG. 51
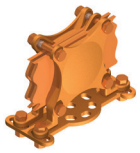	SHV SERIES PG. 51
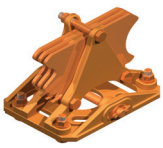	SAVS SERIES PG. 52
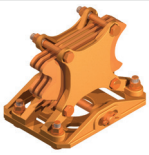	SHVS SERIES PG. 52
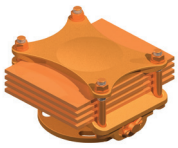	SSHH SERIES PG. 53
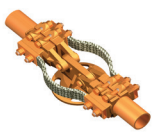	XBC SERIES PG. 54

© 2011, AFL, all rights reserved. PP-3-00136, Revision 12, 7.20.2023
Specifications are subject to change without notice.

Bronze Connectors

Bronze Couplers

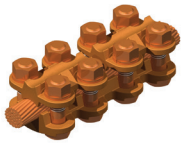	CCV-S SERIES PG. 55
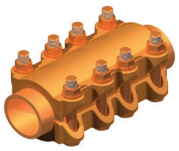	CP SERIES PG. 56
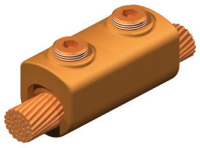	HC SERIES PG. 57
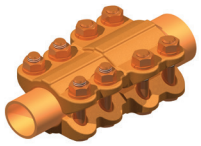	RP SERIES PG. 58
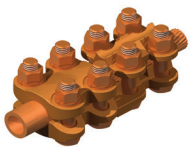	RPCV-S SERIES PG. 60
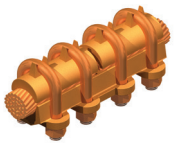	UK SERIES PG. 61
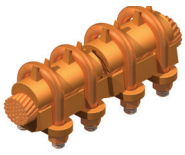	UKR SERIES PG. 62
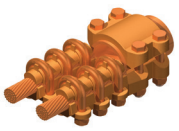	UP2K SERIES PG. 63
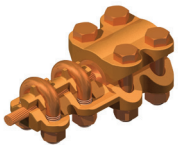	UPK SERIES PG. 65

Bronze Braided or Laminated Expansion

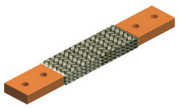	CF-N SERIES PG. 66
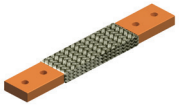	CF SERIES PG. 69
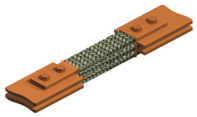	CFC SERIES PG. 71
	LX SERIES PG. 72
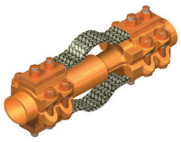	XC SERIES PG. 73
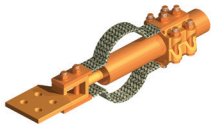	XL SERIES PG. 75
	XTP SERIES PG. 76
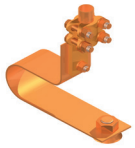	XTS SERIES PG. 78
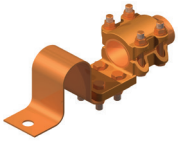	XTSS SERIES PG. 80

Bronze Elbows, Tee and Vee Connectors

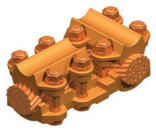	BCV-S SERIES PG. 81
	BP SERIES PG. 82
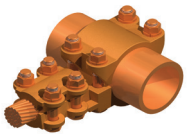	BPCV-S SERIES PG. 84
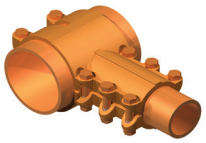	BPE SERIES PG. 86
	EP SERIES PG. 88
	PSK SERIES PG. 89
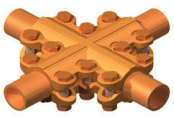	PX SERIES PG. 90
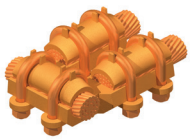	U2T SERIES PG. 91
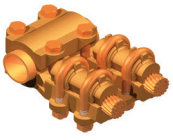	UP2T SERIES PG. 93
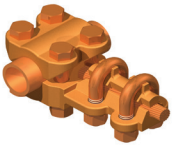	UPT SERIES PG. 95

© 2011, AFL, all rights reserved. PP-3-00136, Revision 12, 7.20.2023
Specifications are subject to change without notice.

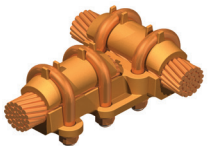
UT SERIES
PG. 97

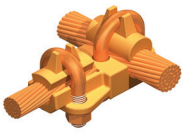
UTS SERIES
PG. 99

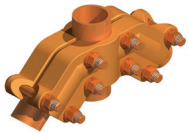
VB SERIES
PG. 100

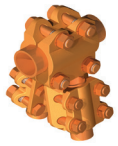
VBPS SERIES
PG. 101

Bronze Parallel, Cross, and Bar Taps


DGF SERIES
PG. 102

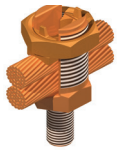
DGM SERIES
PG. 103

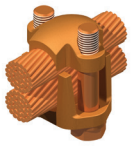
DSU SERIES
PG. 104

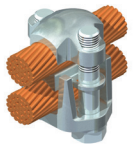
DSUN SERIES
PG. 105


ES SERIES
PG. 106

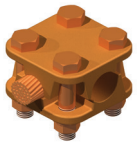
GPEX SERIES
PG. 107

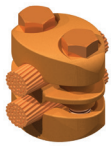
GTV SERIES
PG. 108

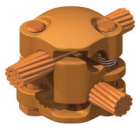
GTX SERIES
PG. 110

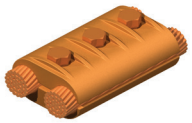
PC SERIES
PG. 111

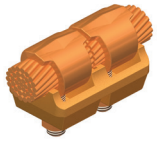
Q2L SERIES
PG. 114


QL SERIES
PG. 115

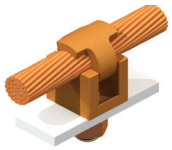
TL SERIES
PG. 116

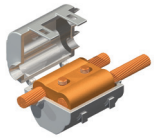
TRV SERIES
PG. 117

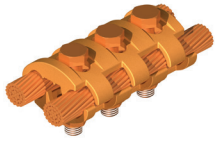
UD SERIES
PG. 118

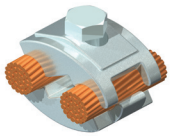
UDV SERIES
PG. 119

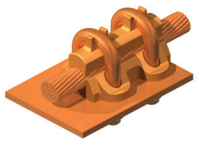
UM SERIES
PG. 120

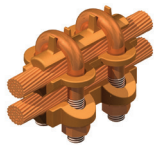
UP SERIES
PG. 121

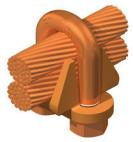
WC SERIES
PG. 122

Bronze Connectors for Flat Bar

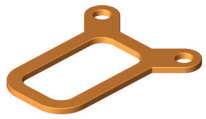
BS SERIES
PG. 123

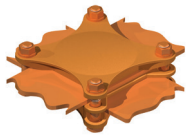
DH SERIES
PG. 124

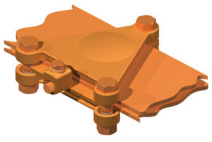
HAF SERIES
PG. 125

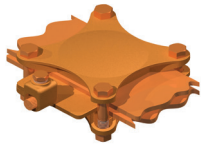
HHF SERIES
PG. 127

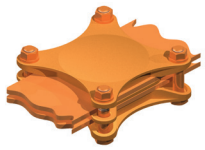
HSS SERIES
PG. 129

© 2011, AFL, all rights reserved. PP-3-00136, Revision 12, 7.20.2023
Specifications are subject to change without notice.

Bronze Connectors

Bronze Grounding Connectors And Everdur Hardware	
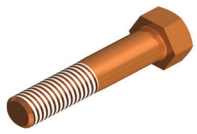	EB SERIES
	PG. 130
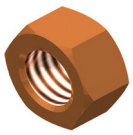	EN SERIES
	PG. 131
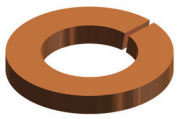	ELW SERIES
	PG. 131
	EILW SERIES
	PG. 131
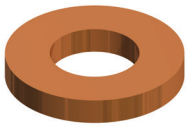	EW SERIES
	PG. 131
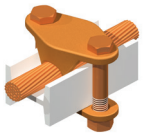	G110 SERIES
	PG. 132
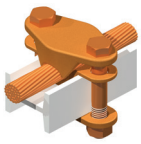	G111 SERIES
	PG. 132
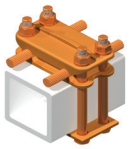	G114 SERIES
	PG. 132
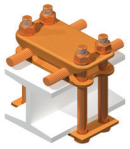	G115 SERIES
	PG. 132

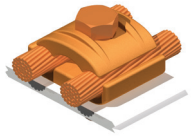	GA SERIES
	PG. 133
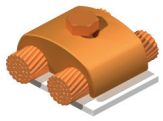	GAM SERIES
	PG. 134
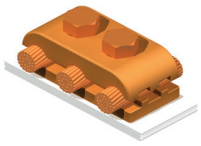	GB SERIES
	PG. 135
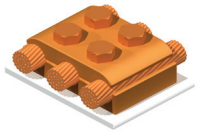	GBB SERIES
	PG. 135
	GCF SERIES
	PG. 136
	GCG SERIES
	PG. 136
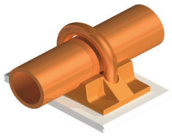	GD SERIES
	PG. 137
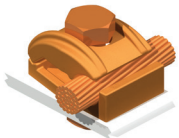	GF SERIES
	PG. 138
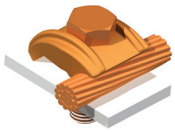	GFM SERIES
	PG. 138
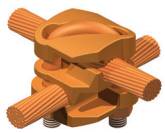	GG SERIES
	PG. 139

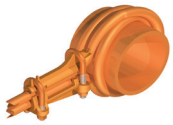	GH SERIES
	PG. 140
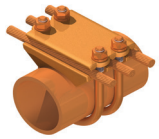	GK SERIES
	PG. 141
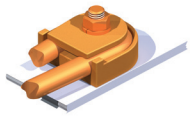	GL SERIES
	PG. 143
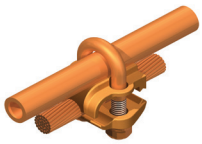	GPC SERIES
	PG. 144
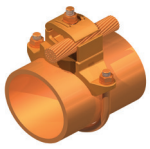	GPF SERIES
	PG. 146
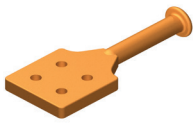	GPH-N SERIES
	PG. 147
	GPH SERIES
	PG. 148
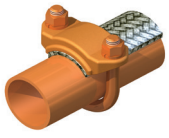	GR SERIES
	PG. 149
	GS SERIES
	PG. 150
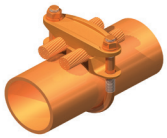	GW SERIES
	PG. 151

© 2011, AFL, all rights reserved. PP-3-00136, Revision 12, 7.20.2023
Specifications are subject to change without notice.

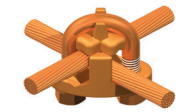	GX SERIES PG. 153
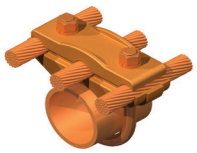	GZ SERIES PG. 154
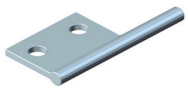	MTRC SERIES PG. 156
	MTR2C SERIES PG. 156
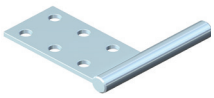	MTR3C SERIES PG. 156
	Q2TE SERIES PG. 157
	Q3TE SERIES PG. 157
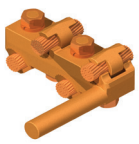	Q4TE SERIES PG. 157
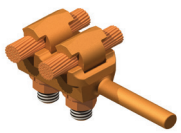	Q2TS SERIES PG. 159
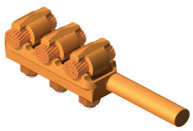	Q3TS SERIES PG. 159
	Q4TS SERIES PG. 159
	TGC SERIES PG. 161

Bronze Stud Connectors

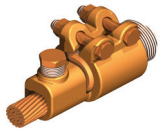	HSC SERIES PG. 162
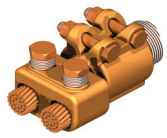	HS2C SERIES PG. 162
	HS3C SERIES PG. 162
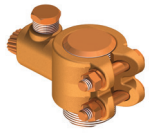	HSC-90 SERIES PG. 164
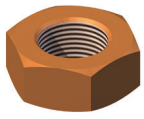	NP SERIES PG. 165
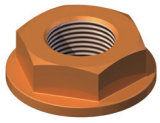	NF SERIES PG. 165
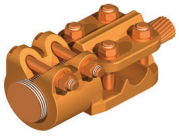	SCX SERIES PG. 166
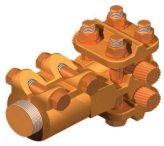	S2CX SERIES PG. 166
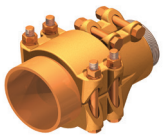	SP SERIES PG. 168
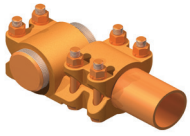	SP-90 SERIES PG. 168
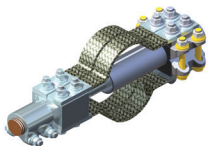	SX-A SERIES PG. 169
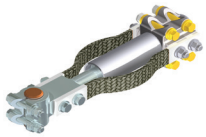	SX-A-90 SERIES PG. 169
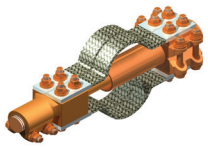	SX SERIES PG. 170
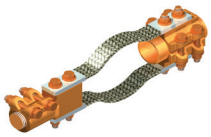	SXP SERIES PG. 170
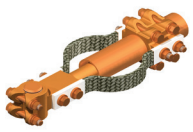	SX-90 SERIES PG. 170
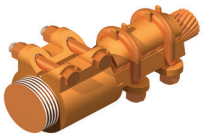	US SERIES PG. 172
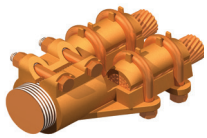	U2S SERIES PG. 172

© 2011, AFL, all rights reserved. PP-3-00136, Revision 12, 7.20.2023
Specifications are subject to change without notice.

Bronze Connectors


US-90 SERIES
PG. 172

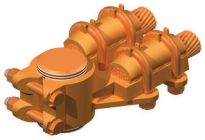
U2S-90 SERIES
PG. 172

Bronze Spacers

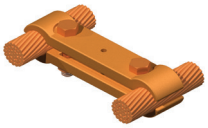
CASV SERIES
PG. 174

Bronze Dead End Clamps


UD2E SERIES
PG. 175


UD2E-PG SERIES
PG. 175

Bronze End Caps

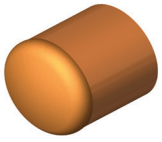
CI SERIES
PG. 176

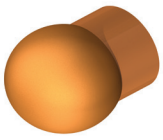
CX SERIES
PG. 176

Bronze Terminals, Taps

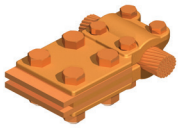
CFT SERIES
PG. 177

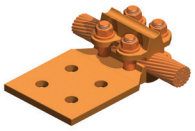
CFTV-S SERIES
PG. 178

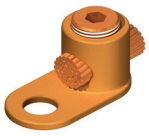
D SERIES
PG. 179

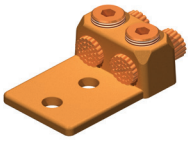
D2 SERIES
PG. 180

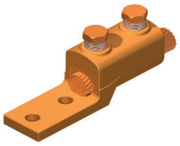
HHL SERIES
PG. 181

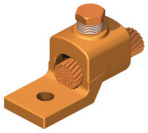
HL SERIES
PG. 183

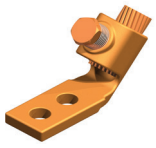
HLA-45 SERIES
PG. 183

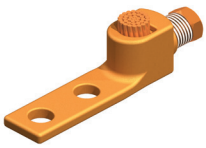
HLA-90 SERIES
PG. 183

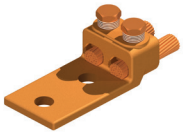
H2L SERIES
PG. 185

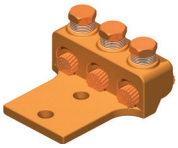
H3L SERIES
PG. 185

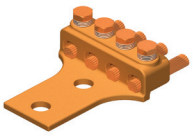
H4L SERIES
PG. 185

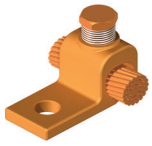
HLB SERIES
PG. 187

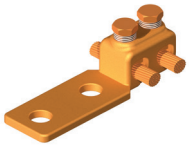
H2LB SERIES
PG. 187


HLS SERIES
PG. 189

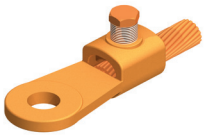
HLSC SERIES
PG. 189


PFTS SERIES
PG. 190

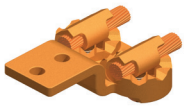
Q2LB SERIES
PG. 192

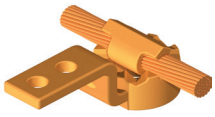
QLB SERIES
PG. 193

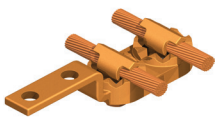
QLLB SERIES
PG. 193

© 2011, AFL, all rights reserved. PP-3-00136, Revision 12, 7.20.2023
Specifications are subject to change without notice.

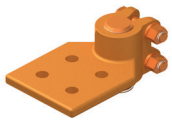	SCB-90H SERIES PG. 195
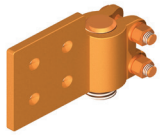	SCB-90V SERIES PG. 195
	SCB-F SERIES PG. 196
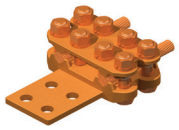	T2CVH SERIES PG. 200
	T2CVHA-45 SERIES PG. 200
	T2CVHA-90 SERIES PG. 200
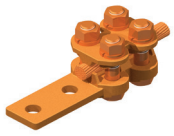	TCVH SERIES PG. 202
	TCVHA-30 SERIES PG. 202
	TCVHA-45 SERIES PG. 202
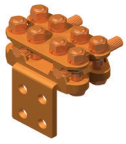	TCVHA-90 SERIES PG. 202

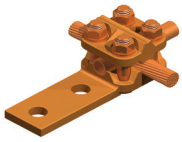	TCX SERIES PG. 204
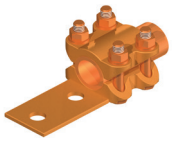	TP SERIES PG. 205
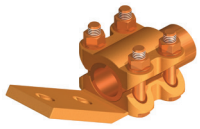	TPA-30 SERIES PG. 205
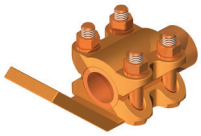	TPA-45 SERIES PG. 205
	TPA-60 SERIES PG. 205
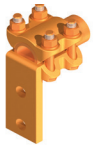	TPA-90 SERIES PG. 205
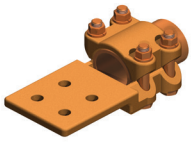	TPC SERIES PG. 207
	UL-90H SERIES PG. 208
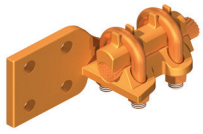	UL-90V SERIES PG. 209
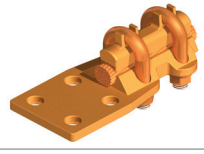	UL SERIES PG. 210

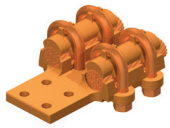	U2L SERIES PG. 210
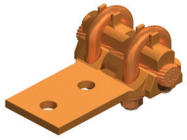	ULB SERIES PG. 212
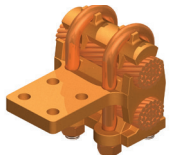	U2LB SERIES PG. 212
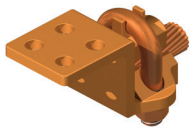	ULI SERIES PG. 214
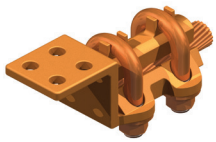	UULI SERIES PG. 214

© 2011, AFL, all rights reserved. PP-3-00136, Revision 12, 7.20.2023
Specifications are subject to change without notice.

© 2011, AFL, all rights reserved. PP-3-00136, Revision 12, 7.20.2023
Specifications are subject to change without notice.

DOSSERT®
TYPE AD

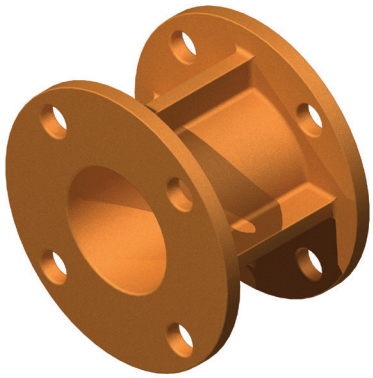

A high strength cast bronze insulator adapter for adjusting bus center line heights from insulators. Adapters for heights and bolt circle mountings other than those listed can be readily supplied.

Material
Copper Alloy

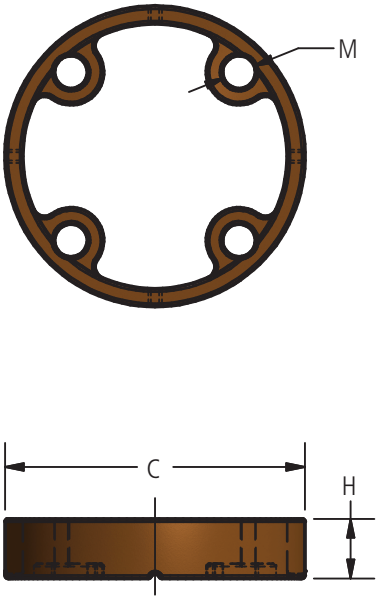

FIG. 1

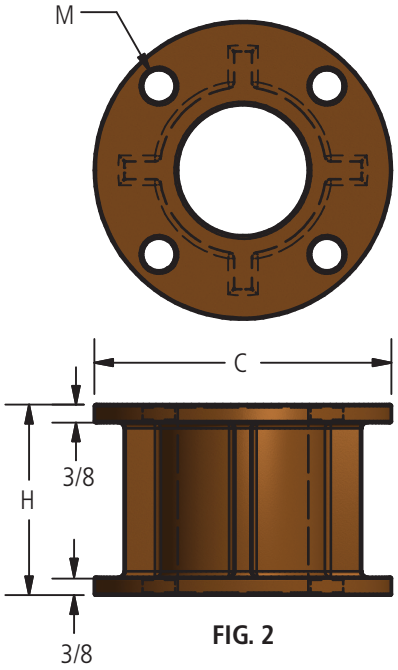

FIG. 2

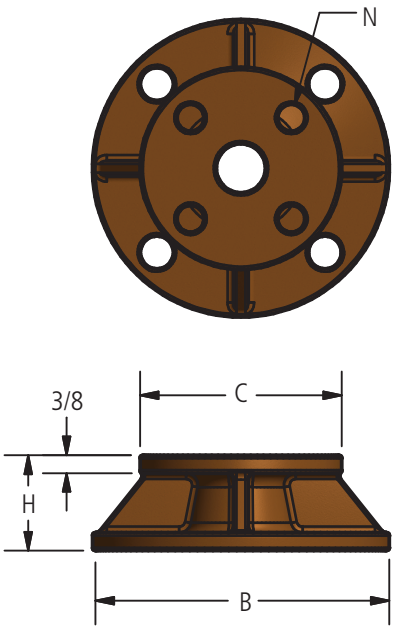

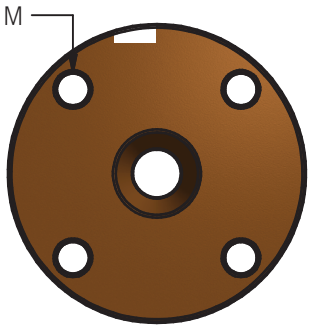

FIG. 3

© 2011, AFL, all rights reserved. PP-3-00208, Revision 0, 2.21.11
Specifications are subject to change without notice.

DOSSERT®
TYPE AD

Ordering Information

CATALOG NUMBER	FIGURE NUMBER	BOLT CIRCLE (B)	BOLT CIRCLE (C)	DIMENSIONS IN INCHES				
				B	C	H	M	N
AD3-1/2-3	1	-	3	-	4 1/4	1/2	9/16	-
AD3-3/4-3	1	-	3	-	4 1/4	3/4	9/16	-
AD3-1-3	1	-	3	-	4 1/4	1	9/16	-
AD3-1-1/4-3	1	-	3	-	4 1/4	1 1/4	9/16	-
AD3-1-1/2-3	1	-	3	-	4 1/4	1 1/2	9/16	-
AD3-1-3/4-3	1	-	3	-	4 1/4	1 3/4	9/16	-
AD5-1/2-5	1	-	5	-	6 1/4	1/2	11/16	-
AD5-3/4-5	1	-	5	-	6 1/4	3/4	11/16	-
AD5-1-5	1	-	5	-	6 1/4	1	11/16	-
AD5-1-1/4-5	1	-	5	-	6 1/4	1 1/4	11/16	-
AD5-1-1/2-5	1	-	5	-	6 1/4	1 1/2	11/16	-
AD5-1-3/4-5	1	-	5	-	6 1/4	1 3/4	11/16	-
AD3-2-3	2	-	3	-	4 1/4	2	9/16	-
AD3-2-1/2-3	2	-	3	-	4 1/4	2 1/2	9/16	-
AD3-3-3	2	-	3	-	4 1/4	3	9/16	-
AD3-3-1/2-3	2	-	3	-	4 1/4	3 1/2	9/16	-
AD3-4-3	2	-	3	-	4 1/4	4	9/16	-
AD3-5-3	2	-	3	-	4 1/4	5	9/16	-
AD3-6-3	2	-	3	-	4 1/4	6	9/16	-
AD3-2-5	3	3	5	6 1/4	4 1/4	2	11/16	9/16
AD3-2-1/2-5	3	3	5	6 1/4	4 1/4	2 1/2	11/16	9/16
AD3-3-5	3	3	5	6 1/4	4 1/4	3	11/16	9/16
AD3-3-1/2-5	3	3	5	6 1/4	4 1/4	3 1/2	11/16	9/16
AD3-4-5	3	3	5	6 1/4	4 1/2	4	11/16	9/16
AD3-5-5	3	3	5	6 1/4	4 1/4	5	11/16	9/16
AD3-6-5	3	3	5	6 1/4	4 1/4	6	11/16	9/16
AD5-2-5	2	-	5	-	6 1/4	2	11/16	-
AD5-2-1/2-5	2	-	5	-	6 1/4	2 1/2	11/16	-
AD5-3-5	2	-	5	-	6 1/4	3	11/16	-
AD5-3-1/2-5	2	-	5	-	6 1/4	3 1/2	11/16	-
AD5-4-5	2	-	5	-	6 1/4	4	11/16	-
AD5-5-5	2	-	5	-	6 1/4	5	11/16	-
AD5-6-5	2	-	5	-	6 1/4	6	11/16	-

© 2011, AFL, all rights reserved. PP-3-00208, Revision 0, 2.21.11
Specifications are subject to change without notice.

DOSSERT®

TYPE CAP

Bus Support for Tubular Bus To Insulator Cap

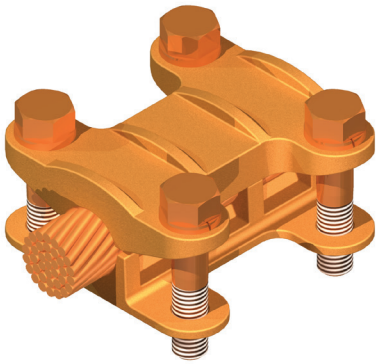

A two piece high strength bronze cable support which mounts conductor to cap of insulator. Furnished with cap screws for threading into tapped holes on insulator. For base mounting, if specified, bolts and nuts will be furnished. When ordering specify conductor size to be employed so that correct length of bolt can be supplied.

Material
Copper Alloy

Hardware
Everdur bolts and lockwashers

Notes
- For Electro Tin Plate, add "-SN" to catalog number. EX: CAP21-3-SN

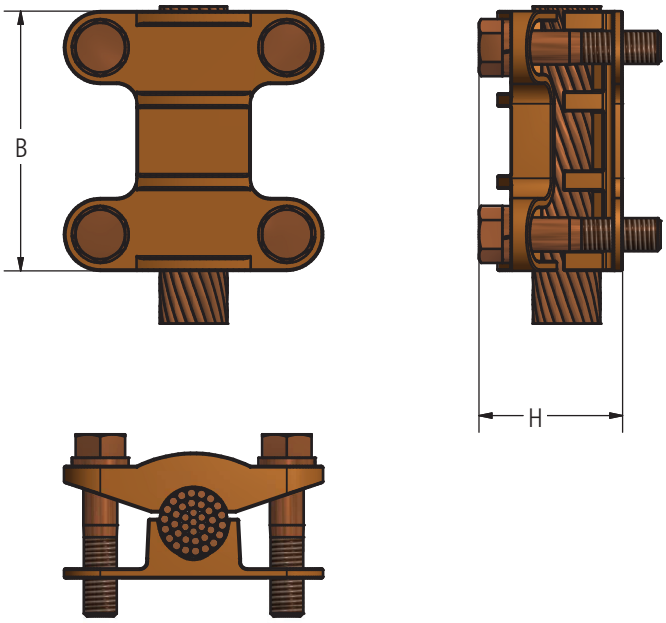

Ordering Information

CATALOG NUMBER	CABLE RANGE		BOLT CIRCLE	DIMENSIONS IN INCHES		
	MIN	MAX		B	H	BOLT SIZE
CAP21-3	2 Stranded	4/0 Stranded	3	3 1/4	1 9/16	1/2
CAP21-5	2 Stranded	4/0 Stranded	5	4 15/16	1 13/16	5/8
CAP50-3	2/0 Stranded	500 kcmil	3	3 1/4	1 13/16	1/2
CAP50-5	2/0 Stranded	500 kcmil	5	4 15/16	2 1/16	5/8
CAP125-3	550 kcmil	1250 kcmil	3	3 1/4	2 3/16	1/2
CAP125-5	550 kcmil	1250 kcmil	5	4 15/16	2 3/4	5/8

© 2011, AFL, all rights reserved. PP-3-00267, Revision 1, 10.8.18
Specifications are subject to change without notice.

DOSSERT®

TYPE CBP

Two Unit Bus Support For Cable

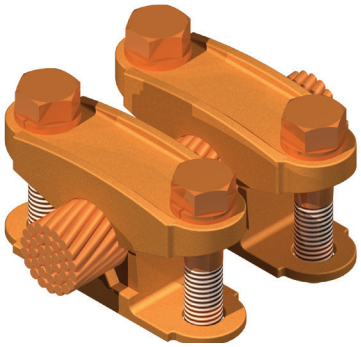

A two unit four piece high strength bronze cable support which mounts conductor to cap of insulator. A single unit for light service can be supplied on request. Clamp is furnished with cap screws for threading into tapped holes of insulator. Specify conductor size when ordering in order that correct length of cap screw or bolt can be supplied.

Material

Copper Alloy

Hardware

Everdur bolts and lockwashers

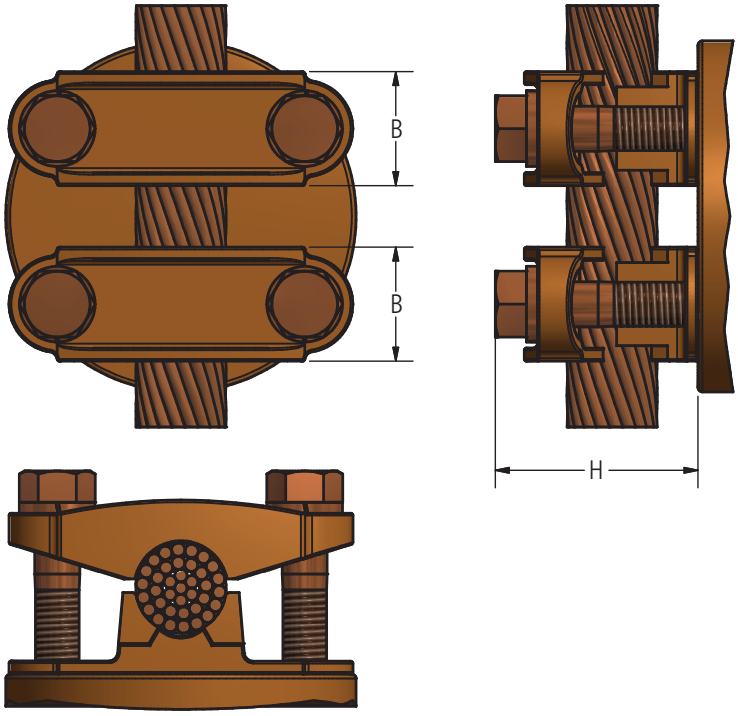

Ordering Information

CATALOG NUMBER	CABLE RANGE		DIMENSIONS IN INCHES			
	MIN	MAX	BOLT CIRCLE	B	H	BOLT SIZE
CBP21-3	2 Stranded	4/0 Stranded	3	1 1/8	1 9/16	1/2
CBP21-5	2 Stranded	4/0 Stranded	5	1 3/8	1 13/16	5/8
CBP50-3	2/0 Stranded	500 kcmil	3	1 1/8	1 13/16	1/2
CBP50-5	2/0 Stranded	500 kcmil	5	1 3/8	2 1/16	5/8
CBP125-3	550 kcmil	1250 kcmil	3	1 3/8	2 3/16	1/2
CBP125-5	550 kcmil	1250 kcmil	5	1 5/8	2 3/4	5/8

© 2011, AFL, all rights reserved. PP-3-00273, Revision 0, 2.21.11
Specifications are subject to change without notice.

DOSSERT®

TYPE CS

Bus Support Clamp For Cable Conductor

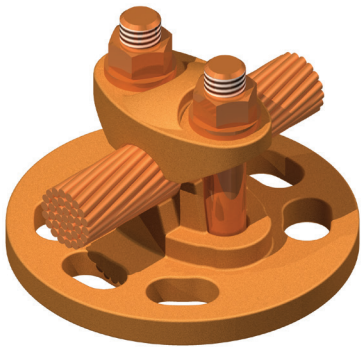

A high strength bronze bus support clamp for cable conductor. For securing to insulator, bolts and nuts are furnished for pin and slotted cap mountings, and cap screws for cap mountings. When ordering specify type of mountings to be used and also cable size to determine clamping bolt length.

Material

Copper Alloy

Hardware

Everdur bolts, nuts and lockwashers
Mounting hardware galvanized steel

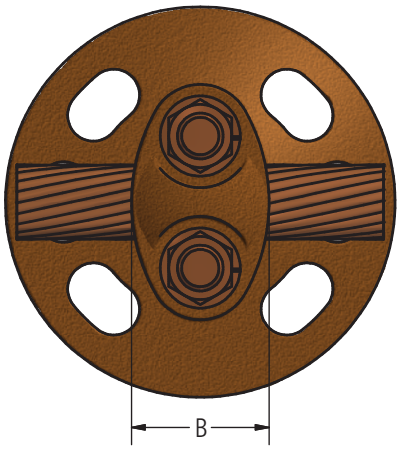

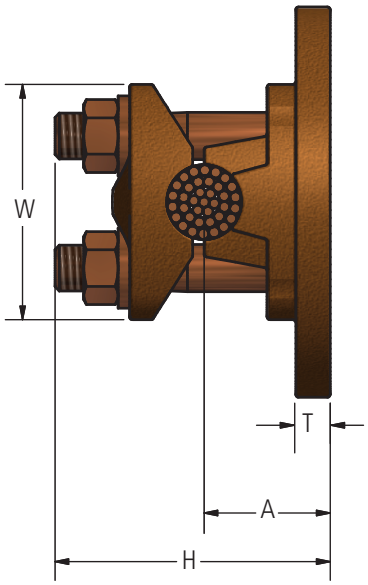

Ordering Information

CATALOG NUMBER	CONDUCTOR RANGE				BOLT CIRCLE	DIMENSIONS IN INCHES					
	CABLE		SPS			A	B	H	W	T	BOLT SIZE
	MIN	MAX	MIN	MAX							
CS21-3	6 Solid	4/0 Stranded	–	–	3	1 1/4	1 1/2	2 9/16	1 15/16	7/32	3/8
CS21-5	6 Solid	4/0 Stranded	–	–	5	1 1/4	1 1/2	2 9/16	1 15/16	7/32	3/8
CS50-3	2/0 Stranded	500 kcmil	1/4	1/2	3	1 3/8	1 1/2	2 5/8	2 3/16	3/8	3/8
CS50-5	2/0 Stranded	500 kcmil	1/4	1/2	5	1 3/8	1 1/2	2 5/8	2 3/16	3/8	3/8
CS125-3	550 kcmil	1250 kcmil	1/2	1	3	1 9/16	1 3/4	3 1/4	3 1/4	3/8	1/2
CS125-5	550 kcmil	1250 kcmil	1/2	1	5	1 9/16	1 3/4	3 1/4	3 1/4	3/8	1/2
CS200-3	1300 kcmil	2000 kcmil	1	1 1/4	3	1 7/8	1 3/4	3 7/16	3 1/2	3/8	1/2
CS200-5	1300 kcmil	2000 kcmil	1	1 1/4	5	1 7/8	1 3/4	3 7/16	3 1/2	3/8	1/2

© 2011, AFL, all rights reserved. PP-3-00291, Revision 1, 1.10.2023
Specifications are subject to change without notice.

DOSSERT®

TYPE CVSP
Cable Bus Support

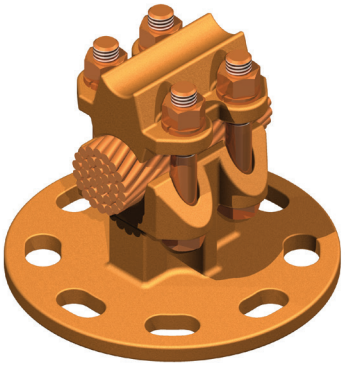

Material
Copper Alloy

Hardware
Everdur bolts, nuts and lockwashers
Mounting hardware galvanized steel

Note
For less mounting hardware add suffix 'LMH' to catalog number.
Ex: CVSP143A-5-LMH

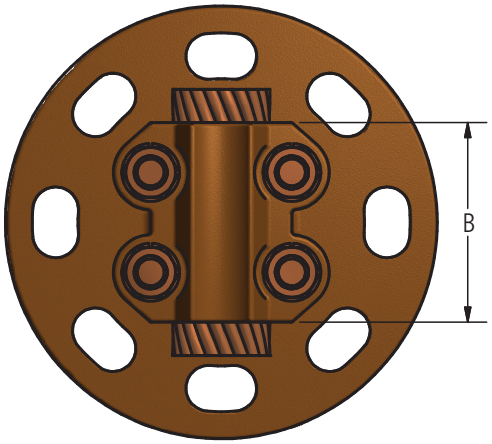

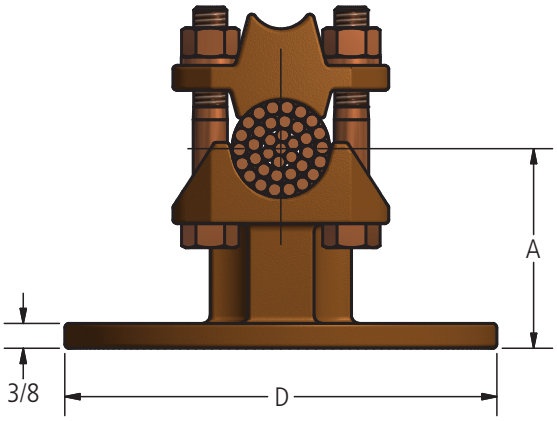

Ordering Information

CATALOG NUMBER	CABLE RANGE				SPS RANGE		DIMENSIONS IN INCHES			
	SMALL GROOVE		LARGE GROOVE							
	MIN	MAX	MIN	MAX	SMALL GROOVE	LARGE GROOVE	BOLT CIRCLE	A	B	D
CVSP143-3	3/0 STR	700 MCM	715.5 MCM	1431 STR	1/4	1	3	3 1/4	3	4 1/4
CVSP143-5	3/0 STR	700 MCM	715.5 MCM	1431 STR	1/4	1	5	3	3	6 1/4

© 2011, AFL, all rights reserved. PP-3-00298, Revision 1, 8.25.17
Specifications are subject to change without notice.

DOSSERT®

TYPE HSSB, HSSC

Pedestal Bus Support For Multiple Flat Bar

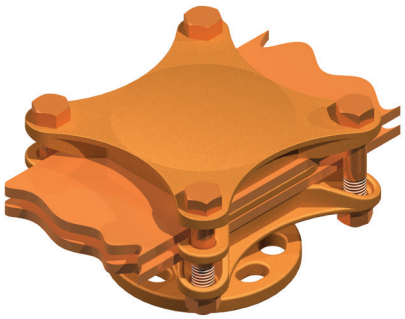

Type HSSB provides for bolt circle mounting on a 3 inch or 5 inch bolt circle. Type HSSC is a center mounting clamp for horizontal supporting of flat bus. Cap screws are furnished for cap mounting and bolts and nuts are furnished for base mounting. Unless otherwise specified clamps are supplied for cap mounting.

Material

Copper Alloy

Hardware

Everdur bolts, nuts and lockwashers
Mounting hardware galvanized steel

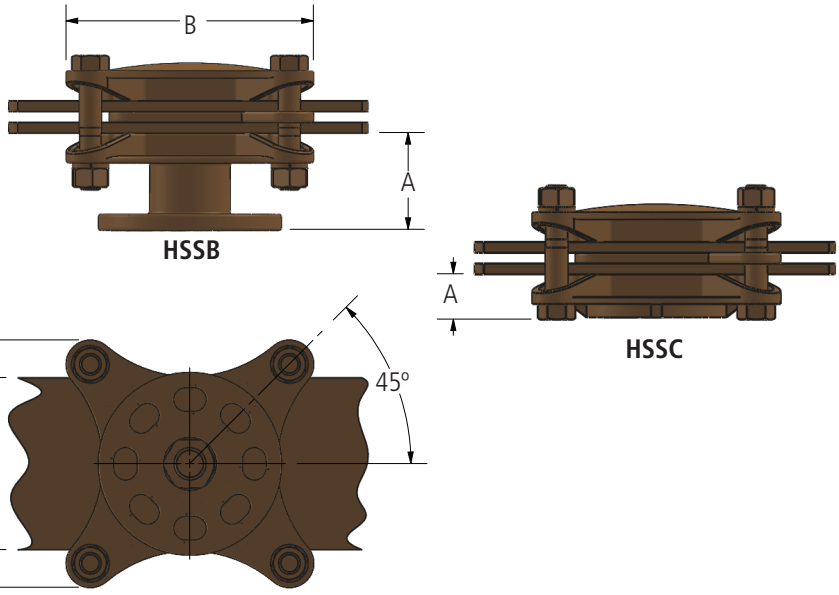

Ordering Information

CATALOG NUMBER		BOLT CIRCLE	DIMENSIONS IN INCHES					
			A				CENTER BOLT	BOLT SIZE
HSSB	HSSC		HSSB	HSSC	B	W		
HSSB2-3	HSSC2-3	3	2 1/4	1	3 5/16	2	3/4	3/8
HSSB2-5	HSSC2-5	5	2	1	3 5/16	2	3/4	3/8
HSSB3-3	HSSC3-3	3	2 1/4	1	4 5/16	3	3/4	3/8
HSSB3-5	HSSC3-5	5	2	1	4 5/16	3	3/4	3/8
HSSB4-3	HSSC4-3	3	2 1/4	1	5 3/4	4	3/4	1/2
HSSB4-5	HSSC4-5	5	2	1	5 3/4	4	3/4	1/2
HSSB5-3	HSSC5-3	3	2 1/4	1	7 1/8	5	3/4	5/8
HSSB5-5	HSSC5-5	5	2	1	7 1/8	5	3/4	5/8
HSSB6-3	HSSC6-3	3	2 1/4	1	8 1/8	6	3/4	5/8
HSSB6-5	HSSC6-5	5	2	1	8 1/8	6	3/4	5/8

© 2011, AFL, all rights reserved. PP-3-00379, Revision 1, 8.6.13
Specifications are subject to change without notice.

DOSSERT®

TYPE PA, PAP

Bus Support For Circle Mount Insulators

A single cap four bolt bus support for mounting on insulator bolt circle positions. Type PA clamps bus directly to insulator while type PAP is provided with an under saddle conforming to bus diameter for higher clamping pressure. Both types can be furnished with cap screws for cap mounting or bolts and nuts for base mounting. Unless otherwise specificed supports are furnished for cap and mounting as illustrated.

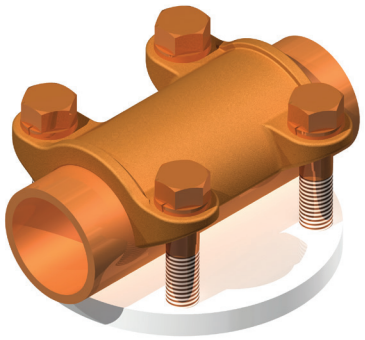

PA

Material

Copper Alloy

Hardware

Everdur bolts, lockwashers

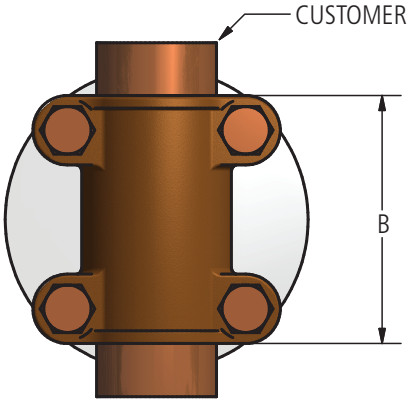

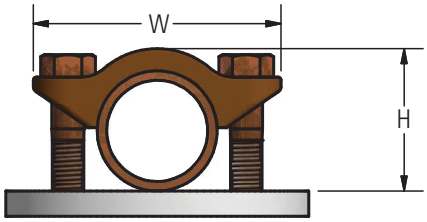

PA

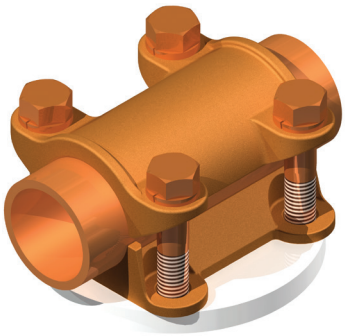

PAP

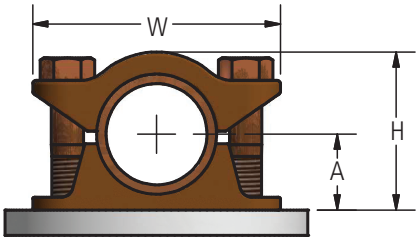

PAP

Ordering Information

CATALOG NUMBER		SPS	BOLT CIRCLE	DIMENSIONS IN INCHES					BOLT SIZE
				A	B	H		W	
PA	PAP					PA	PAP		
PA50-3	PAP50-3	1/2	3	3/4	3 1/4	1 3/8	1 11/16	3 1/4	1/2
PA50-5	PAP50-5	1/2	5	3/4	4 15/16	1 1/2	1 13/16	4 15/16	5/8
PA75-3	PAP75-3	3/4	3	7/8	3 1/4	1 9/16	1 15/16	3 1/4	1/2
PA75-5	PAP75-5	3/4	5	7/8	4 15/16	1 11/16	2 1/16	4 15/16	5/8
PA100-3	PAP100-3	1	3	1	3 1/4	1 3/4	2 1/8	3 1/4	1/2
PA100-5	PAP100-5	1	5	1	4 15/16	2	2 5/16	4 15/16	5/8
PA125-3	PAP125-3	1 1/4	3	1 1/8	3 1/4	2 1/8	2 7/15	3 1/4	1/2
PA125-5	PAP125-5	1 1/4	5	1 1/8	4 15/16	2 3/8	2 11/16	4 15/16	5/8
PA150-5	PAP150-5	1 1/2	5	1 1/4	4 15/16	2 7/16	2 3/4	4 15/16	5/8
PA200-5	PAP200-5	2	5	1 1/2	4 15/16	2 3/4	3 1/16	4 15/16	5/8
PA250-5	PAP250-5	2 1/2	5	1 3/4	4 15/16	3 5/16	3 5/8	4 15/16	5/8

© 2011, AFL, all rights reserved. PP-3-00388, Revision 1, 8.6.13
Specifications are subject to change without notice.

DOSSERT®

TYPE PB, PBP

Bus Support With Two Unit Cap

A two unit cap clamping bus support for mounting on insulator bolt circle positions. Type PB clamps bus directly to insulator while type PBP is provided with two independent matching bus saddles. Available for either cap or base mounting. Unless otherwise specified supports are furnished for cap mounting as illustrated.

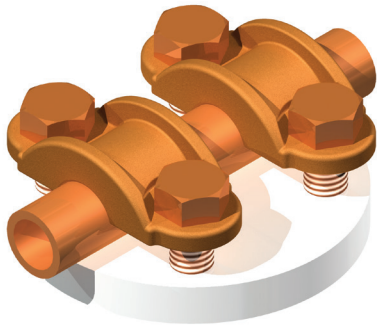

PB

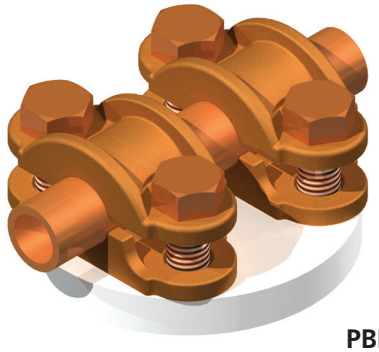

PBP

Material

Copper Alloy

Hardware

Everdur bolts, lockwashers

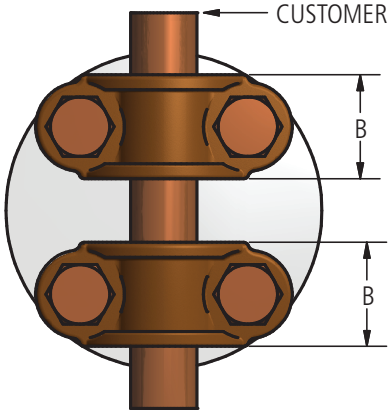

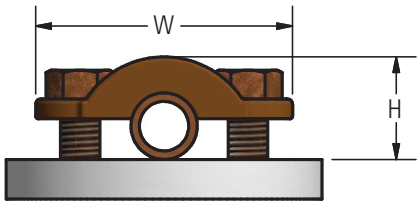

PB

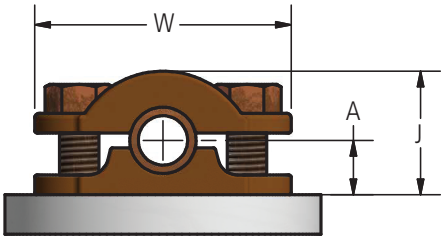

PBP

Ordering Information

CATALOG NUMBER		SPS	BOLT CIRCLE	DIMENSIONS IN INCHES					
				A	B	H	J	W	BOLT SIZE
PB50-3	PBP50-3	1/2	3	3/4	1 5/16	1 3/8	1 11/16	3 1/4	1/2
PB50-5	PBP50-5	1/2	5	3/4	1 3/8	1 1/2	1 13/16	4 15/16	5/8
PB75-3	PBP75-3	3/4	3	7/8	1 5/16	1 9/16	1 15/16	3 1/4	1/2
PB75-5	PBP75-5	3/4	5	7/8	1 3/8	1 11/16	2 1/16	4 15/16	5/8
PB100-3	PBP100-3	1	3	1	1 1/2	1 3/4	2 1/8	3 1/4	1/2
PB100-5	PBP100-5	1	5	1	1 5/8	2	2 5/16	4 15/16	5/8
PB125-3	PBP125-3	1 1/4	3	1 1/8	1 1/2	2 1/8	2 7/16	3 1/4	1/2
PB125-5	PBP125-5	1 1/4	5	1 1/8	1 5/8	2 3/8	2 11/16	4 15/16	5/8
PB150-5	PBP150-5	1 1/2	5	1 1/4	1 3/4	2 7/16	2 3/4	4 15/16	5/8
PB200-5	PBP200-5	2	5	1 1/2	1 3/4	2 3/4	3 1/16	4 15/16	5/8
PB250-5	PBP250-5	2 1/2	5	1 3/4	1 7/8	3 5/16	3 5/8	4 15/16	5/8

© 2011, AFL, all rights reserved. PP-3-00389, Revision 0, 2.21.11
Specifications are subject to change without notice.

DOSSERT®

TYPE PL

Pipe Bus Support Slide or Tight Fit

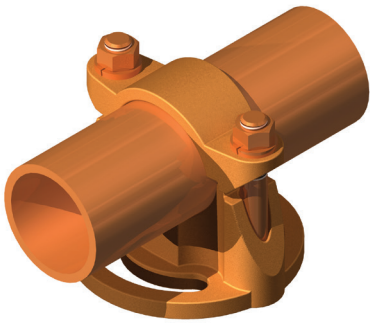

A two bolted clamp type high strength bronze bus support. This unit is non-magnetic and corrosion resistant. The design of this support permits a minimum radius of gyration about the support mounting thus minimizing cantilever stresses. Type PL is both a tight and slip fit action clamp with either action obtained by reversing cap.

Material

Copper Alloy

Hardware

Everdur bolts, nuts and lockwashers
Mounting hardware galvanized steel

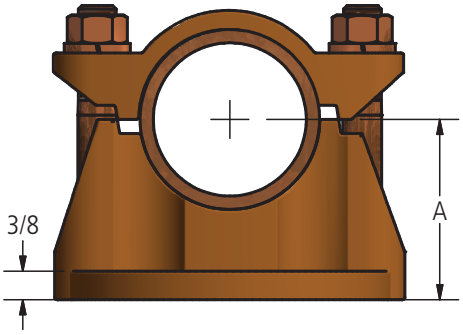

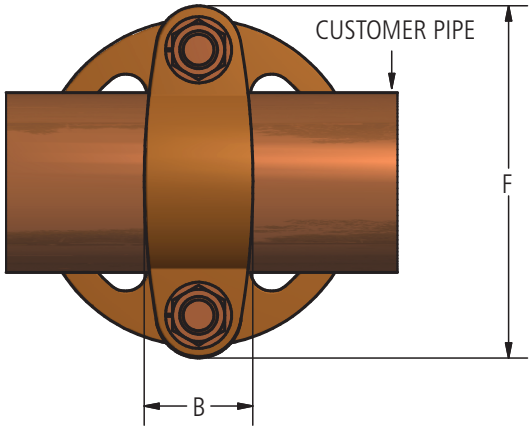

Ordering Information

CATALOG NUMBER	SPS	BOLT CIRCLE	DIMENSIONS IN INCHES			BOLT SIZE
			A	B	F	
PL75-3	3/4	3	1 3/8	1 1/2	4 1/4	1/2
PL75-5	3/4	5	1	1 1/2	6 1/4	1/2
PL100-3	1	3	1 5/8	1 1/2	4 1/4	1/2
PL100-5	1	5	1 1/8	1 1/2	6 1/4	1/2
PL125-3	1 1/4	3	1 3/4	1 11/16	4 1/4	1/2
PL125-5	1 1/4	5	1 3/8	1 11/16	6 1/4	1/2
PL150-3	1 1/2	3	2	1 11/16	4 1/4	1/2
PL150-5	1 1/2	5	1 1/2	1 11/16	6 1/4	1/2
PL200-3	2	3	2 3/8	1 11/16	4 1/4	1/2
PL200-5	2	5	2 1/4	1 11/16	6 1/4	1/2
PL250-3	2 1/2	3	2 5/8	1 3/4	4 1/4	1/2
PL250-5	2 1/2	5	2 1/2	1 3/4	6 1/4	1/2
PL300-3	3	3	2 7/8	1 13/16	5 3/4	5/8
PL300-5	3 1/2	5	3	1 3/4	6 1/4	5/8

© 2011, AFL, all rights reserved. PP-3-00397, Revision 2, 5.8.2023
Specifications are subject to change without notice.

DOSSERT®

TYPE PLC

Bus Support For Tubular Bus To Insulator

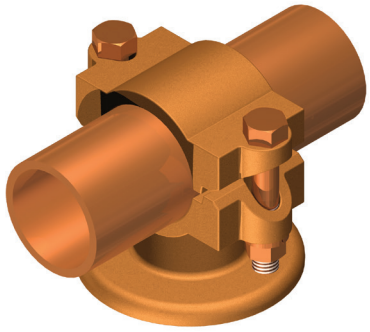

A bus support for mounting a tubular bus to a 3/4-10 NC 2 center tapped insulator. The center tap mounting permits any angular arrangement for bus positioning while a reversible cap allows for slip fit or tight clamping on bus. Other thread sizes for center mounting can be readily supplied.

Material

Copper Alloy

Hardware

Everdur bolts, nuts and lockwashers
Mounting hardware galvanized steel

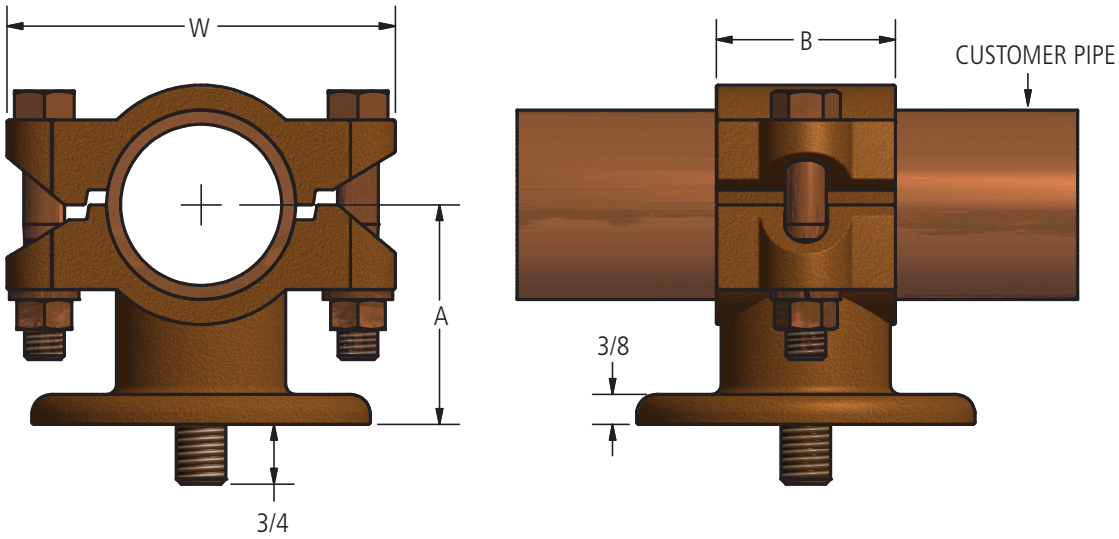

Ordering Information

CATALOG NUMBER	SPS	DIMENSIONS IN INCHES			BOLT SIZE
		A	B	W	
PLC50	1/2	1 3/4	1 3/4	2 3/8	3/8
PLC75	3/4	2	1 1/2	2 9/16	3/8
PLC100	1	2	1 1/2	2 7/8	3/8
PLC125	1 1/4	2 1/4	2	3 1/2	1/2
PLC150	1 1/2	2 1/2	2	3 13/16	1/2
PLC200	2	2 3/4	2 1/4	4 1/4	1/2
PLC250	2 1/2	3 1/8	2 1/4	4 3/4	1/2
PLC300	3	3 5/8	2 1/2	5 7/8	5/8
PLC350	3 1/2	4	2 1/2	6 3/8	5/8
PLC400	4	4 1/2	2 1/2	6 7/8	5/8

© 2011, AFL, all rights reserved. PP-3-00399, Revision 0, 2.21.11
Specifications are subject to change without notice.

DOSSERT®

TYPE PSC

Bus Support For Two Tubular Busses

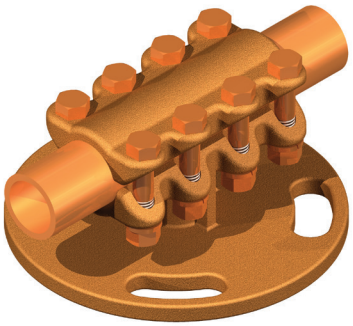

A bus support for joining and supporting two tubular buses on a post type insulator. Designed for a high resistance to impact or sustained cantilever and torsional stresses. Nuts and bolts are furnished for a base mounting or slotted cap mounting or cap screws for an insulator cap mounting.

Material

Copper Alloy

Hardware

Everdur bolts, nuts and lockwashers
Mounting hardware galvanized steel

Note

For tin plating add "-SN" to end of catalog number.

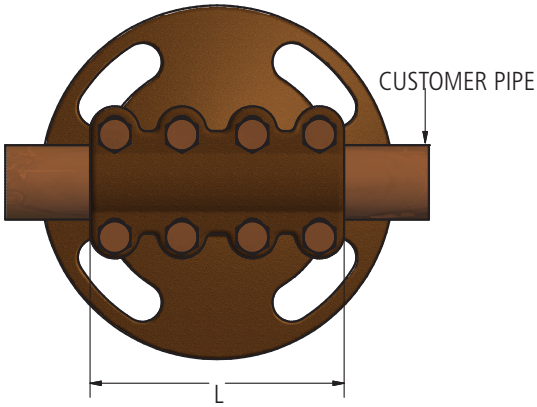

Ordering Information

CATALOG NUMBER	SPS	BOLT CIRCLE	DIMENSIONS IN INCHES		
			A	L	BOLT SIZE
PSC75-3	3/4	3	2	3 1/2	3/8
PSC75-5	3/4	5	2 1/4	3 1/2	3/8
PSC100-3	1	3	2	4 1/2	3/8
PSC100-5	1	5	2 1/4	4 1/2	3/8
PSC125-3	1 1/4	3	2 1/4	5 1/2	1/2
PSC125-5	1 1/4	5	2 3/8	5 1/2	1/2
PSC150-3	1 1/2	3	2 1/2	5 3/4	1/2
PSC150-5	1 1/2	5	2 1/2	5 3/4	1/2
PSC200-3	2	3	2 3/4	6	1/2
PSC200-5	2	5	2 3/4	6	1/2
PSC250-3	2 1/2	3	3 1/8	6	1/2
PSC250-5	2 1/2	5	3 1/8	6	1/2
PSC300-5	3	5	3 5/8	7	5/8
PSC350-5	3 1/2	5	4	8	5/8
PSC400-5	4	5	4 1/2	8 3/4	5/8

© 2011, AFL, all rights reserved. PP-3-00402, Revision 0, 2.21.11
Specifications are subject to change without notice.

DOSSERT®

TYPE PSD, PSD-U

Bus Support, Pipe, Slide or Tight Fit

A heavy duty bus support clamp designed with a low bus center point height to reduce cantilever action and withstand high stresses. For PSD series, reversible clamps permit tight or slip fit assembly. For PSD-U series, U-bolt provides tight fit. Entire unit is non-magnetic and corrosion resistant.

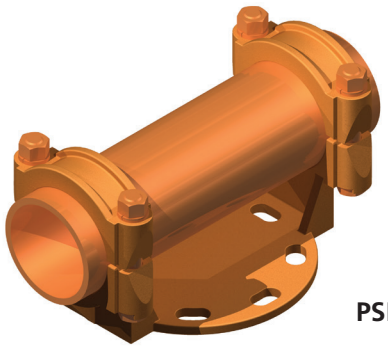

PSD

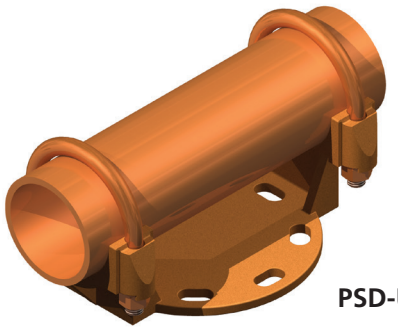

PSD-U

Material

Copper Alloy

Hardware

Everdur bolts, nuts and lockwashers
Mounting hardware galvanized steel

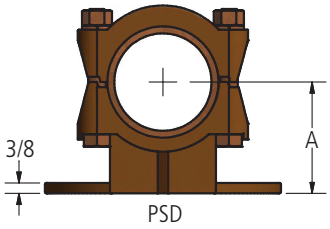

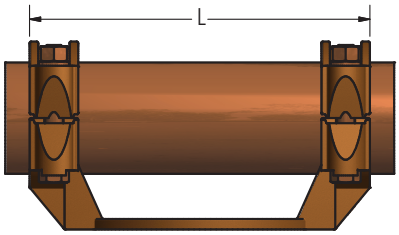

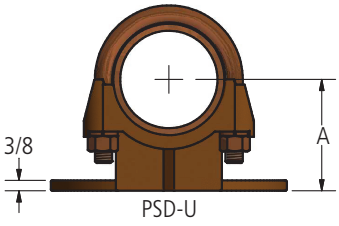

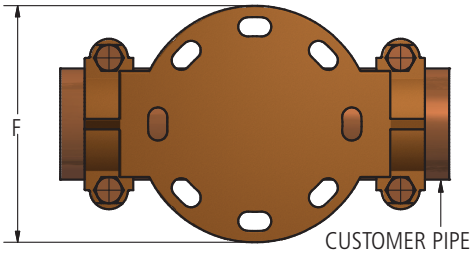

Ordering Information

CATALOG NUMBER	CATALOG NUMBER U-BOLT	SPS	BOLT CIRCLE	DIMENSIONS IN INCHES			BOLT SIZE
				A	F	L	
PSD75-3	PSD75-3-U	3/4	3	2	4 1/4	6 3/4	1/2
PSD75-5	PSD75-5-U	3/4	5	2 1/4	6 1/4	9	1/2
PSD100-3	PSD100-3-U	1	3	2	4 1/4	7	1/2
PSD100-5	PSD100-5-U	1	5	2 1/4	6 1/4	9	1/2
PSD125-3	PSD125-3-U	1 1/4	3	2 1/4	4 1/4	7 1/4	1/2
PSD125-5	PSD125-5-U	1 1/4	5	2 3/8	6 1/4	9 1/2	1/2
PSD150-3	PSD150-3-U	1 1/2	3	2 1/2	4 1/4	7 1/4	1/2
PSD150-5	PSD150-5-U	1 1/2	5	2 1/2	6 1/4	9 1/2	1/2
PSD200-3	PSD200-3-U	2	3	2 3/4	4 1/4	7 1/4	1/2
PSD200-5	PSD200-5-U	2	5	2 3/4	6 1/4	9 1/2	1/2
PSD250-3	PSD250-3-U	2 1/2	3	3 1/8	4 1/4	7 3/4	1/2
PSD250-5	PSD250-5-U	2 1/2	5	3 1/8	6 1/4	10	1/2
PSD300-3	PSD300-3-U	3	3	3 5/8	7 3/4	4 1/4	5/8
PSD300-5	PSD300-5-U	3	5	3 5/8	10	6 1/4	5/8
PSD300-7	PSD300-7-U	3	7	3 5/8	12 1/4	8 1/2	5/8
PSD350-3	PSD350-3-U	3 1/2	3	4	7 3/4	4 1/4	5/8
PSD350-5	PSD350-5-U	3 1/2	5	4	10	6 1/4	5/8
PSD400-3	PSD400-3-U	4	3	4 1/2	7 3/4	4 1/4	5/8
PSD400-5	PSD400-5-U	4	5	4 1/2	10	6 1/4	5/8
PSD400-7	PSD400-7-U	4	7	4 1/2	12 1/4	8 1/2	5/8
PSD500-3	PSD500-3-U	5	3	5	8	4 1/4	5/8
PSD500-5	PSD500-5-U	5	5	5	10	6 1/4	5/8
PSD500-7	PSD500-7-U	5	7	5	12 3/4	8 1/2	5/8
PSD600-3	PSD600-3-U	6	3	5 1/2	8 1/4	4 1/4	5/8
PSD600-5	PSD600-5-U	6	5	5 1/2	10 1/2	6 1/4	5/8
PSD600-7	PSD600-7-U	6	7	5 1/2	12 3/4	8 1/2	5/8
PSD800-7	PSD800-7-U	8	7	6 7/8	12 3/4	8 1/2	5/8

© 2011, AFL, all rights reserved. PP-3-00404, Revision 0, 2.21.11
Specifications are subject to change without notice.

DOSSERT®

TYPE PSRE

Low Mounting Variable Bus Support

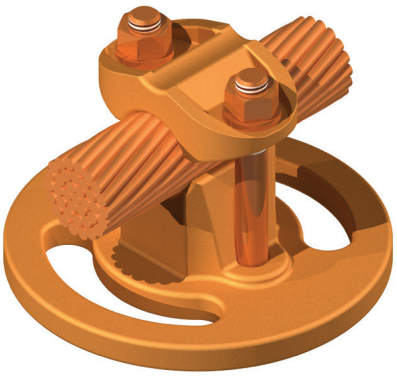

An inexpensive low mounting variable bus support clamp. The wide range of conductor sizes accommodated by a reversible cap minimizes the number of clamps to cover a given range of bus sizes. Furnished complete with cap screws for cap mounting or with bolts, nuts, and lockwashers for base mounting.

Material

Copper Alloy

Hardware

Everdur bolts, nuts and lockwashers
Mounting hardware galvanized steel

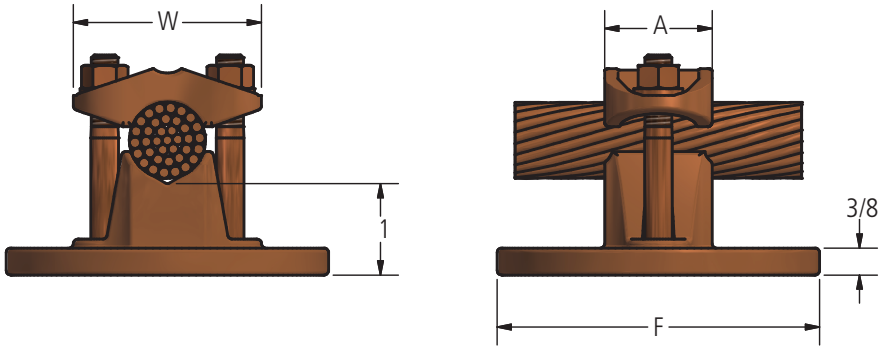

Ordering Information

CATALOG NUMBER	CABLE RANGE		DIMENSIONS IN INCHES				
	MIN	MAX	BOLT CIRCLE	A	F	W	BOLT SIZE
PSRE75-3	1/4	1 1/16	3	1 1/2	4 1/4	2 1/2	3/8
PSRE125-3	13/16	1 11/16	3	1 5/8	4 1/4	3 1/2	1/2
PSRE200-3	1 5/8	2 3/8	3	1 5/8	4 1/4	4 1/4	1/2
PSRE75-5	1/4	1 1/16	5	1 1/2	6 1/4	2 1/2	3/8
PSRE125-5	13/16	1 11/16	5	1 5/8	6 1/4	3 1/2	1/2
PSRE200-5	1 5/8	2 3/8	5	1 5/8	6 1/4	4 1/4	1/2

© 2011, AFL, all rights reserved. PP-3-00411, Revision 0, 2.21.11
Specifications are subject to change without notice.

DOSSERT®

TYPE PSS, PSS-CH

Pipe Bus Support Slide or Tight Fit

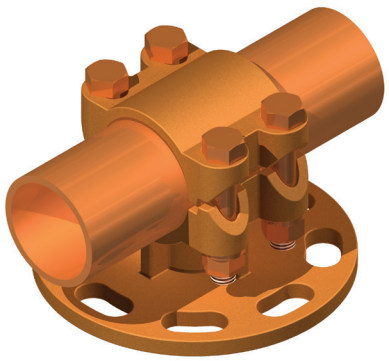

A high strength copper support for securing a tubular bus to a post or pedestal type insulator. Reversible cap permits rigid or slip fit on conductor. Designed with a high resistance to impact and sustained cantilever and torsion stresses. Entire unit is non-magnetic and corrosion resistant.

Material

Copper Alloy

Note

For a chatter spring add suffix "CH" to catalog number.

Hardware

Everdur bolts, nuts and lockwashers
Mounting hardware galvanized steel

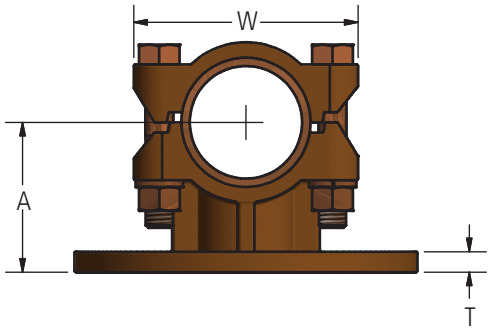

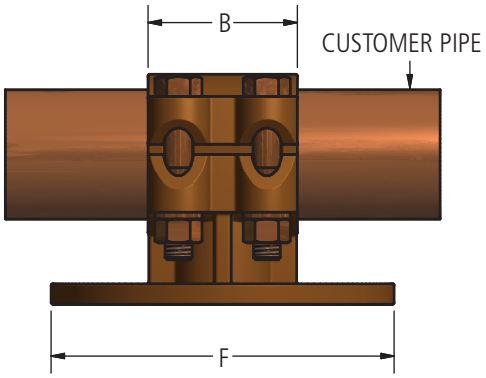

Ordering Information

CATALOG NUMBER		SPS	BOLT CIRCLE	DIMENSIONS IN INCHES					BOLT SIZE
STANDARD	CHATTER SPRING			A	B	F	T	W	
PSS50-3	PSS50-3-CH	1/2	3	1 3/4	2 1/2	4 1/4	3/8	2 5/8	1/2
PSS50-5	PSS50-5-CH	1/2	5	2 1/8	2 1/2	6 1/4	3/8	2 5/8	1/2
PSS75-3	PSS75-3-CH	3/4	3	2	2 3/4	4 1/4	3/8	2 13/16	1/2
PSS75-5	PSS75-5-CH	3/4	5	2 1/4	2 3/4	6 1/4	3/8	2 13/16	1/2
PSS100-3	PSS100-3-CH	1	3	2	2 3/4	4 1/4	3/8	3 1/16	1/2
PSS100-5	PSS100-5-CH	1	5	2 1/4	2 3/4	6 1/4	3/8	3 1/16	1/2
PSS125-3	PSS125-3-CH	1 1/4	3	2 1/4	3	4 1/4	3/8	3 13/32	1/2
PSS125-5	PSS125-5-CH	1 1/4	5	2 3/8	3	6 1/4	3/8	3 13/32	1/2
PSS150-3	PSS150-3-CH	1 1/2	3	2 1/2	3	4 1/4	3/8	3 21/32	1/2
PSS150-5	PSS150-5-CH	1 1/2	5	2 1/2	3	6 1/4	3/8	3 21/32	1/2
PSS200-3	PSS200-3-CH	2	3	2 3/4	3 1/4	4 1/4	3/8	4 1/8	1/2
PSS200-5	PSS200-5-CH	2	5	2 3/4	3 1/4	6 1/4	3/8	4 1/8	1/2
PSS250-3	PSS250-3-CH	2 1/2	3	3 1/8	3 1/4	4 1/4	3/8	4 5/8	1/2
PSS250-5	PSS250-5-CH	2 1/2	5	3 1/8	3 1/4	6 1/4	3/8	4 5/8	1/2
PSS300-3	PSS300-3-CH	3	3	3 5/8	3 3/4	4 1/4	7/16	4 5/8	5/8
PSS300-5	PSS300-5-CH	3	5	3 5/8	3 3/4	6 1/4	7/16	4 5/8	5/8
PSS350-3	PSS350-3-CH	3 1/2	3	4	3 3/4	4 1/4	7/16	6 1/8	5/8
PSS350-5	PSS350-5-CH	3 1/2	5	4	3 3/4	6 1/4	7/16	6 1/8	5/8
PSS400-3	PSS400-3-CH	4	3	4 1/2	3 3/4	4 1/4	7/16	6 5/8	5/8
PSS400-5	PSS400-5-CH	4	5	4 1/2	3 3/4	6 1/4	7/16	6 5/8	5/8
PSS450-3	PSS450-3-CH	4 1/2	3	4 3/4	3 3/4	4 1/4	7/16	7 1/8	5/8
PSS450-5	PSS450-5-CH	4 1/2	5	4 3/4	3 3/4	6 1/4	7/16	7 1/8	5/8
PSS500-3	PSS500-3-CH	5	3	5	3 3/4	4 1/4	7/16	7 5/8	5/8
PSS500-5	PSS500-5-CH	5	5	5	3.75	6 1/4	7/16	7 5/8	5/8
PSS600-5	PSS600-5-CH	6	5	6	3.75	6 1/4	7/16	7 5/8	5/8

© 2011, AFL, all rights reserved. PP-3-00416, Revision 0, 2.21.11
Specifications are subject to change without notice.

DOSSERT®

TYPE PSSR, PSSR-CH

Tubular Bus Support

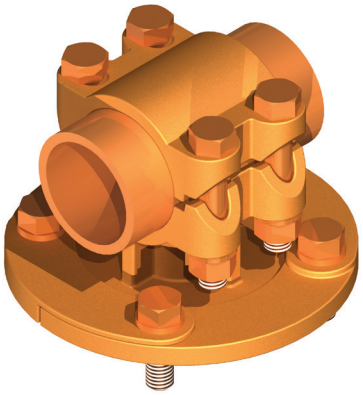

A high strength bronze support for securing a tubular bus to a post or pedestal type insulator. Fully adjustable to any angle within a complete circle (360°) with the advantage of four bolts maintaining angular setting as well as mounting pressure. Reversible cap permits rigid or slip fit on conductor. Supplied with cap screws for insulator cap mounting or bolts and nuts for base mounting. Unless otherwise specified cap screws are supplied.

Material

Copper Alloy

Hardware

Everdur bolts, nuts and lockwashers
Mounting hardware galvanized steel

Note

Add suffix "CH" to catalog number for chatter spring. EX: PSSR200-5-CH

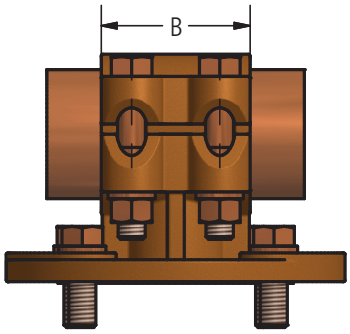

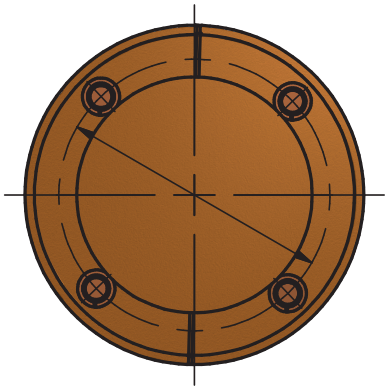

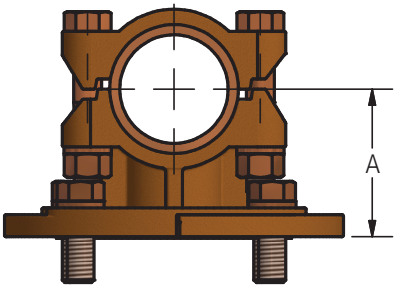

Ordering Information

CATALOG NUMBER		SPS	BOLT CIRCLE	DIMENSIONS IN INCHES		BOLT SIZE CAP
STANDARD	CHATTER SPRING			A	B	
PSSR50-3	PSSR50-3-CH	1/2	3	1 3/4	2 1/8	3/8
PSSR50-5	PSSR50-5-CH	1/2	5	2 1/8	2 1/8	3/8
PSSR75-3	PSSR75-3-CH	3/4	3	2	2 1/8	3/8
PSSR75-5	PSSR75-5-CH	3/4	5	2 1/4	2 1/8	3/8
PSSR100-3	PSSR100-3-CH	1	3	2	2 1/8	3/8
PSSR100-5	PSSR100-5-CH	1	5	2 1/4	2 1/8	3/8
PSSR125-3	PSSR125-3-CH	1 1/4	3	2 1/4	2 1/4	1/2
PSSR125-5	PSSR125-5-CH	1 1/4	5	2 3/8	2 1/4	1/2
PSSR150-3	PSSR150-3-CH	1 1/2	3	2 1/2	2 1/2	1/2
PSSR150-5	PSSR150-5-CH	1 1/2	5	2 1/2	2 1/2	1/2
PSSR200-3	PSSR200-3-CH	2	3	2 3/4	2 3/4	1/2
PSSR200-5	PSSR200-5-CH	2	5	2 3/4	2 3/4	1/2
PSSR250-3	PSSR250-3-CH	2 1/2	3	3 1/8	3	1/2
PSSR250-5	PSSR250-5-CH	2 1/2	5	3 1/8	3	1/2
PSSR300-3	PSSR300-3-CH	3	3	3 5/8	3 1/4	5/8
PSSR300-5	PSSR300-5-CH	3	5	3 5/8	3 1/4	5/8
PSSR350-3	PSSR350-3-CH	3 1/2	3	4	3 1/4	5/8
PSSR350-5	PSSR350-5-CH	3 1/2	5	4	3 1/4	5/8
PSSR400-3	PSSR400-3-CH	4	3	4 1/2	3 1/4	5/8
PSSR400-5	PSSR400-5-CH	4	5	4 1/2	3 1/4	5/8

© 2011, AFL, all rights reserved. PP-3-00415, Revision 0, 2.21.11
Specifications are subject to change without notice.

DOSSERT®

TYPE PSV
Vertical Pipe Bus Support

A right angle bus support clamp for mounting the bus vertically on an insulator. Can be readily supplied for either 3 inch or 5 inch bolt circle for cap or base mounting.

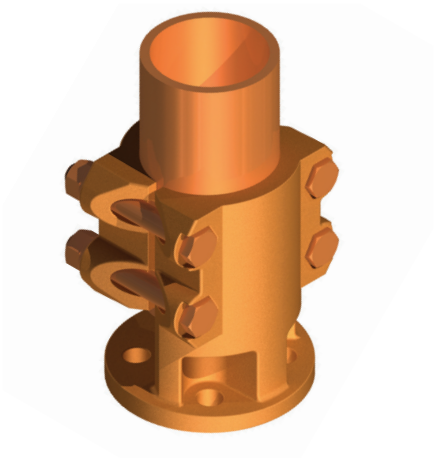

Material

Copper Alloy

Hardware

Everdur bolts, nuts and lockwashers
Mounting hardware galvanized steel

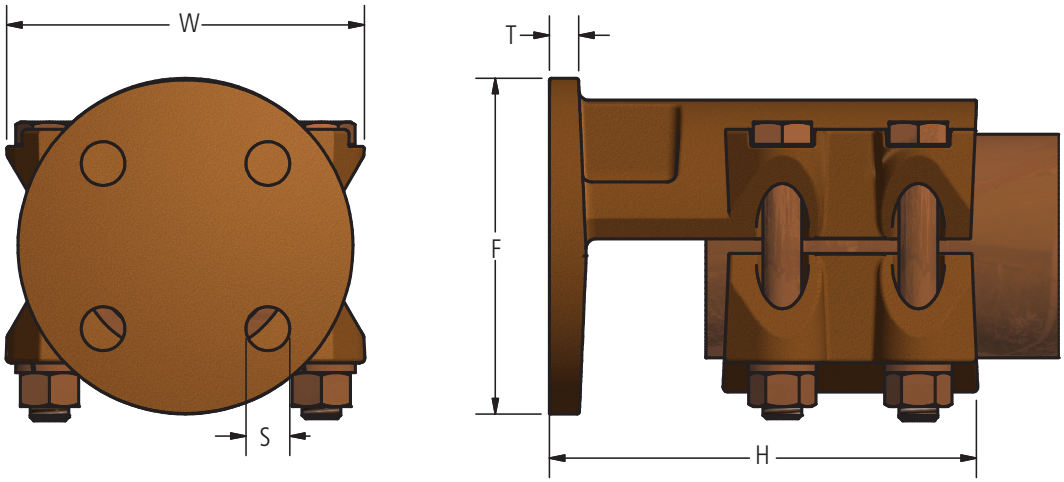

Ordering Information

CATALOG NUMBER	SPS	BOLT CIRCLE	DIMENSIONS IN INCHES					CANTILEVER FORCE LBS	
			F	H	S	T	W	ALLOWABLE	ULTIMATE
PSV100-3	1	3	4 1/4	4 3/8	9/16	3/8	3 1/8	1920	2750
PSV150-3	1 1/2	3	4 1/4	4 3/4	9/16	3/8	3 11/16	2000	2880
PSV150-5	1 1/2	5	6 1/4	4 3/4	11/16	3/8	3 11/16	4130	5950
PSV200-3	2	3	4 1/4	5 1/2	9/16	3/8	4 1/8	2080	2990
PSV200-5	2	5	6 1/4	4 3/4	11/16	3/8	4 1/8	4430	6380
PSV250-3	2 1/2	3	4 1/4	5 1/2	9/16	13/32	4 5/8	2160	3110
PSV250-5	2 1/2	5	6 1/4	4 3/4	11/16	13/32	4 5/8	4590	6610
PSV300-3	3	3	4 1/4	5 5/16	9/16	13/32	5 5/8	2240	3230
PSV300-5	3	5	6 1/4	5 5/16	11/16	13/32	5 5/8	4870	7010
PSV350-3	3 1/2	3	4 1/4	4 7/8	9/16	13/32	6 1/8	2720	3920
PSV350-5	3 1/2	5	6 1/4	5 1/2	11/16	13/32	6 1/8	5030	7240
PSV400-3	4	3	4 1/4	4 7/8	9/16	13/32	6 5/8	2820	4060
PSV400-5	4	5	6 1/4	4 7/8	11/16	3/8	6 5/8	5350	7700

© 2011, AFL, all rights reserved. PP-3-00418, Revision 1, 1.5.2023
Specifications are subject to change without notice.

DOSSERT®

TYPE SBC

Sliding Bus Support For Tubular Bus

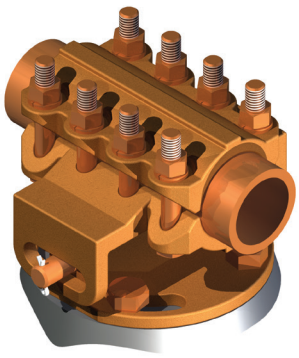

A sliding bus support coupler for standard pipe size tubular bus. Finds wide application where short membered tubular buses are to be joined and supported on structural members or insulators.Complete unit is corrosion resistant and nonmagnetic.

Material

Copper Alloy

Hardware

Everdur bolts, nuts, lockwashers, washers, stainless steel cotter pin
Mounting hardware galvanized steel

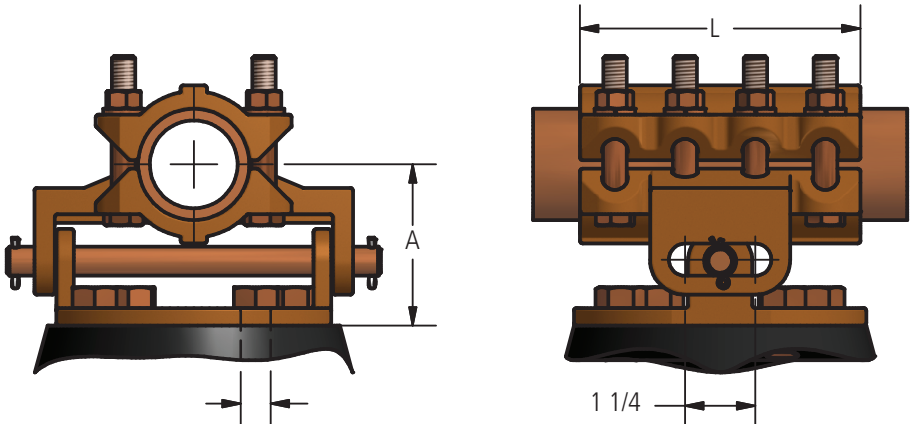

Ordering Information

CATALOG NUMBER	SPS	BOLT CIRCLE	DIMENSIONS IN INCHES		BOLT SIZE
			A	L	
SBC75-3	3/4	3	2	3 1/2	3/8
SBC75-5	3/4	5	2 1/4	3 1/2	3/8
SBC100-3	1	3	2	4 1/2	3/8
SBC100-5	1	5	2 1/4	4 1/2	3/8
SCB125-3	1 1/4	3	2 1/4	5 1/2	1/2
SCB125-5	1 1/4	5	2 3/8	5 1/2	1/2
SCB150-3	1 1/2	3	2 1/2	5 3/4	1/2
SCB150-5	1 1/2	5	2 1/2	5 3/4	1/2
SCB200-3	2	3	2 3/4	6	1/2
SCB200-5	2	5	2 3/4	6	1/2
SCB250-3	2 1/2	3	3 1/8	6	1/2
SCB250-5	2 1/2	5	3 1/8	6	1/2
SCB300-5	3	3	3 5/8	7	5/8
SCB350-5	3 1/2	5	4	8	5/8
SCB400-5	4	3	4 1/2	8 3/4	5/8

© 2011, AFL, all rights reserved. PP-3-00444, Revision 0, 2.21.11
Specifications are subject to change without notice.

DOSSERT®

TYPE SBS

Sliding Bus Support For Tubular Bus

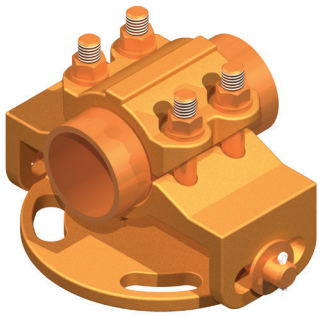

A sliding bus support for standard pipe size tubular bus. The clamp and bracket constitute a rigid member while free axial movement is effected between the bracket and mounting base. Support also permits mounting of tubular buses at slight angular deviation.

Material

Copper Alloy

Hardware

Everdur bolts, nuts and lockwashers
Mounting hardware galvanized steel

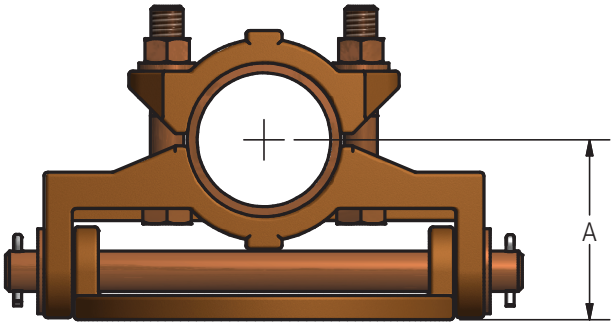

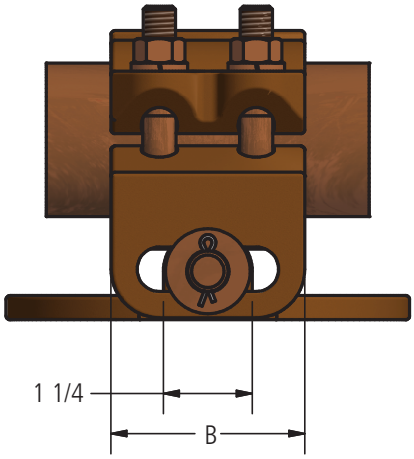

Ordering Information

CATALOG NUMBER	SPS	BOLT CIRCLE	DIMENSIONS IN INCHES		
			A	B	BOLT SIZE
SBS100-3	1	3	2	2 1/8	3/8
SBS100-5	1	5	2 1/4	2 1/8	3/8
SBS125-3	1 1/4	3	2 1/4	2 5/8	1/2
SBS125-5	1 1/4	5	2 3/8	2 5/8	1/2
SBS150-3	1 1/2	3	2 1/2	2 7/8	1/2
SBS150-5	1 1/2	5	2 1/2	2 7/8	1/2
SBS200-3	2	3	2 3/4	3	1/2
SBS200-5	2	5	2 3/4	3	1/2
SBS250-3	2 1/2	3	3 1/8	3 1/8	1/2
SBS250-5	2 1/2	5	3 1/8	3 1/8	1/2
SBS300-5	3	5	3 5/8	3 1/4	5/8
SBS350-5	3 1/2	5	4	3 1/4	5/8
SBS400-5	4	5	4 1/2	3 3/8	5/8

© 2011, AFL, all rights reserved. PP-3-00445, Revision 0, 2.21.11
Specifications are subject to change without notice.

DOSSERT®

TYPE SAH, SAHD, SHH, SHHD

A horizontal bus support for supporting one or more flat bus bars in a horizontal position. The following supports do not include spacers. The double group type includes a single wide spacer only.

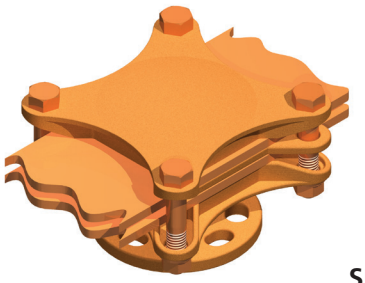

SHH

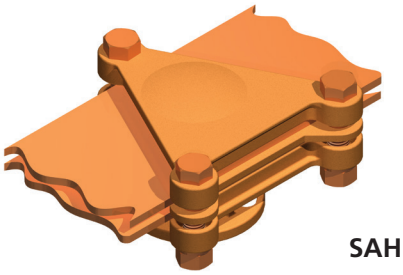

SAH

Material

Copper Alloy

Hardware

Everdur bolts, nuts and lockwashers
Mounting hardware galvanized steel

Note

Add suffix to catalog number for the number of bars to be supported. EX: SAV4-3-4

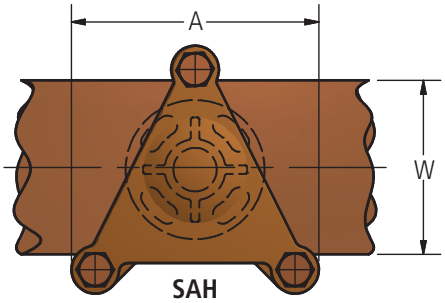

SAH

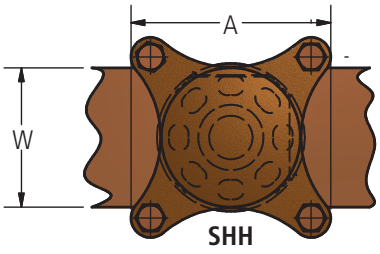

SHH

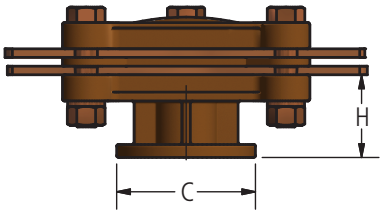

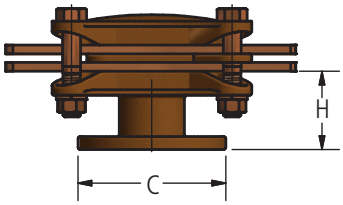

Ordering Information

CATALOG NUMBER				WIDTH OF BARS	BOLT CIRCLE	DIMENSIONS IN INCHES			
SAH	SAHD	SHH	SHHD			A	C	H	W
SAH2-3	SAHD2-3	SHH2-3	SHHD2-3	2	3	3 5/16	3 5/16	2 1/8	2
SAH2-5	SAHD2-5	SHH2-5	SHHD2-5	2	5	3 5/16	3 5/16	2 3/8	2
SAH3-3	SAHD3-3	SHH3-3	SHHD3-3	3	3	3 5/16	4 5/16	2 1/8	3
SAH3-5	SAHD3-5	SHH3-5	SHHD3-5	3	5	3 5/16	4 5/16	2 3/8	3
SAH4-3	SAHD4-8	SHH4-3	SHHD4-3	4	3	4 3/4	5 3/4	2 1/4	4
SAH4-5	SAHD4-5	SHH4-5	SHHD4-5	4	5	4 3/4	5 3/4	2 1/2	4
SAH5-3	SAHD5-3	SHH5-3	SHHD5-3	5	3	5 3/4	6 3/4	2 3/8	5
SAH5-5	SAHD5-5	SHH5-5	SHHD5-5	5	5	5 3/4	6 3/4	2 5/8	5
SAH6-3	SAHD6-3	SHH6-3	SHHD6-3	6	3	7 1/8	8 1/8	2 3/8	6
SAH6-5	SAHD6-5	SHH6-6	SHHD6-6	6	5	7 1/8	8 1/8	2 5/8	6

© 2011, AFL, all rights reserved. PP-3-00439, Revision 0, 2.21.11
Specifications are subject to change without notice.

DOSSERT®

TYPE SAV, SAVD, SHV, SHVD

Vertical Bus Support Clamps

A vertical support clamp for supporting one or more flat bus bars in a vertical or upright position. SAV and SHV does not include a spacer, SAVD and SHVD includes a single wide spacer only.

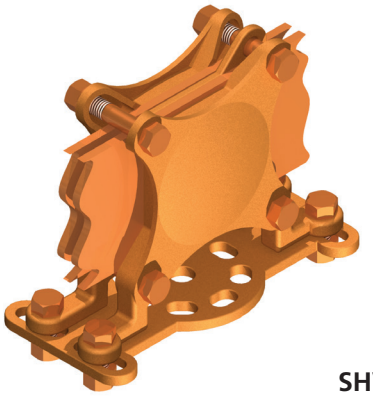

SHV

Material

Copper Alloy

Note

Suffix to the catalog number the number of bars to be supported. EX: SAV4-5-4

Hardware

Everdur bolts, nuts and lockwashers
Mounting hardware galvanized steel

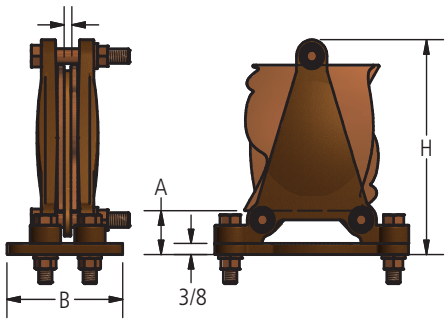

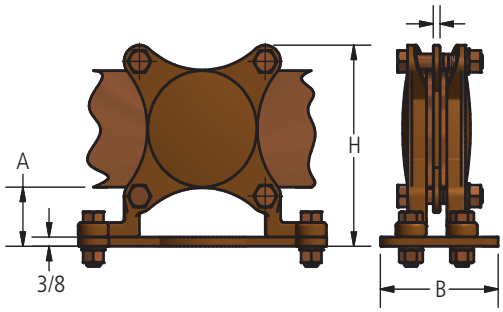

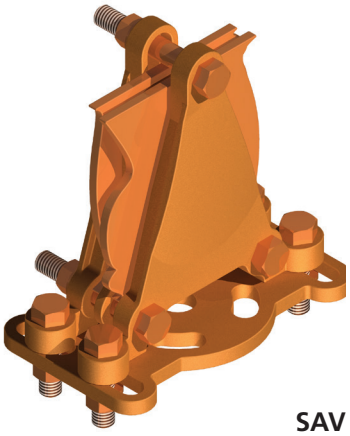

SAV

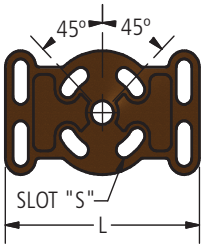

SAV

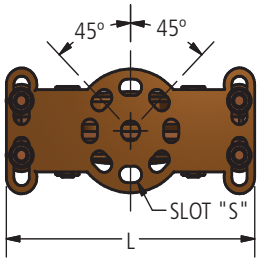

SHV

Ordering Information

CATALOG NUMBER		A	CATALOG NUMBER		A	DIMENSIONS IN INCHES				
SAV	SAVD		SHV	SHVD		WIDTH OF BARS	BOLT CIRCLE	B	H	L
SAV2-3	SAVD2-3	1-3/4	SHV2-3	SHVD2-3	1 3/4	2	3	4 1/4	4 7/16	8 1/8
SAV2-5	SAVD2-5	1-3/4	SHV2-5	SHVD2-5	1 3/4	2	5	4 1/4	4 7/16	8 1/8
SAV3-3	SAVD3-3	1-3/4	SHV3-3	SHVD3-3	1 3/4	3	3	4 1/4	5 7/16	8 1/8
SAV3-5	SAVD3-5	1-3/4	SHV3-5	SHVD3-5	1 3/4	3	5	4 1/4	5 7/16	8 1/8
SAV4-3	SAVD4-3	1-3/4	SHV4-3	SHVD4-3	1 3/4	4	3	4 1/4	6 3/4	8 1/8
SAV4-5	SAVD4-5	1-3/4	SHV4-5	SHVD4-5	1 3/4	4	5	4 1/4	6 3/4	7 1/8
SAV5-3	SAVD5-3	1-3/4	SHV5-3	SHVD5-3	1 3/4	5	3	4 1/4	7 3/4	7 1/8
SAV5-5	SAVD5-5	1-3/4	SHV5-5	SHVD5-5	1 3/4	5	5	4 1/4	7 3/4	7 1/8
SAV6-3	SAVD6-3	1-3/4	SHV6-3	SHVD6-3	2	6	3	4 1/4	8 15/16	7 1/8
SAV6-5	SAVD6-5	1-3/4	SHV6-5	SHVD6-5	2	6	5	4 1/4	8 15/16	7 1/8

© 2011, AFL, all rights reserved. PP-3-00441, Revision 0, 2.21.11
Specifications are subject to change without notice.

DOSSERT®

TYPE SAVS, SHVS

Sliding Vertical Bus Support For Multiple Flat Bars

Four types of sliding bus support clamps for supporting one or more flat bars in a vertical or upright position. The slotted base provides for 1 1/4 inch of axial traverse. Accommodates any number of bars. Types SAVSD and SHVSD allows for double stack mounting by the provision of a 2 3/8 inch spacer for single or multi-bar systems. Unless otherwise specified types SAVS and SHVS are supplied without spacers and types SAVSD and SHVSD are supplied with only the 2 3/8 inch double stack spacer. Supplied with cap screws for cap mounting or bolts and nuts for base mounting.

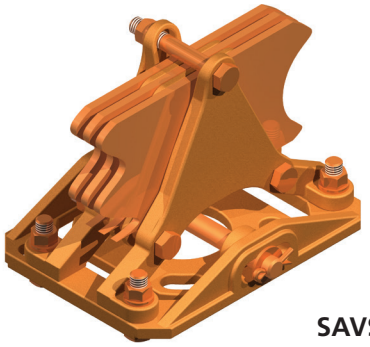

SAVS

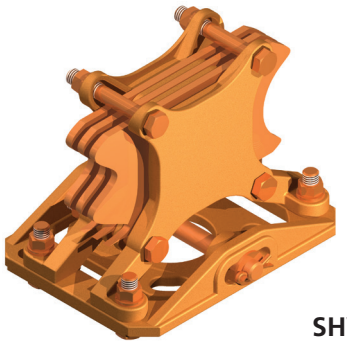

SHVS

Material

Copper Alloy

Hardware

Everdur bolts, nuts, lockwashers, flat washers, and stainless steel cotter pin
Mounting hardware galvanized steel

Note

- For additional spacers for 1/4 inch bars spaced 1/4 inch apart please contact AFL
- When ordering add the number of bars to be supported to the end of the catalog number and state bar thickness if other than 1/4 inch. Example: SAVS3-3-4

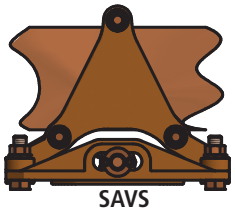

SAVS

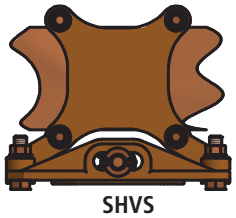

SHVS

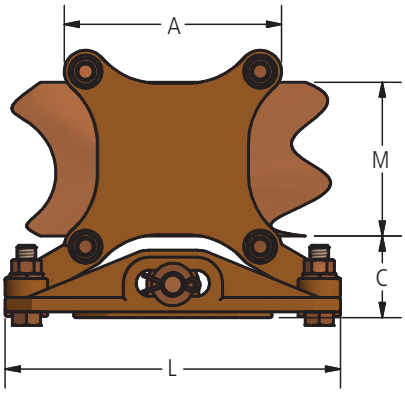

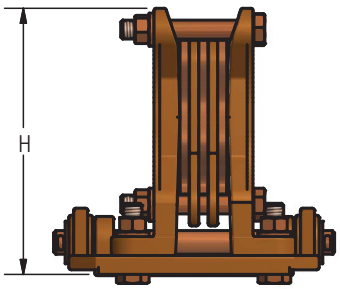

Ordering Information

CATALOG NUMBER		WIDTH OF BARS M	BOLT CIRCLE	DIMENSIONS IN INCHES				BOLT SIZE
SAVS	SHVS			A	C	H	L	
SAVS3-3	SHVS3-3	3	3	4 5/16	1 3/8	5 3/8	7 3/8	3/8
SAVS3-5	SHVS3-5	3	5	4 5/16	1 1/2	5 1/2	9 3/8	3/8
SAVS4-3	SHVS4-3	4	3	4 3/4	1 7/8	6 3/4	7 7/8	1/2
SAVS4-5	SHVS4-5	4	5	5 3/4	2	6 7/8	9 5/16	1/2
SAVS5-3	SHVS5-3	5	3	4 3/4	1 7/8	7 3/4	7 7/8	1/2
SAVS5-5	SHVS5-5	5	5	5 3/4	2	7 7/8	9 5/16	1/2
SAVS6-3	SHVS6-3	6	3	4 3/4	1 7/8	8 3/4	7 7/8	1/2
SAVS6-5	SHVS6-5	6	5	5 3/4	2	8 7/8	9 5/16	1/2

© 2011, AFL, all rights reserved. PP-3-00443, Revision 0, 2.21.11
Specifications are subject to change without notice.

DOSSERT®

TYPE SSHH, SSHHD

Horizontal Sliding Bus Support

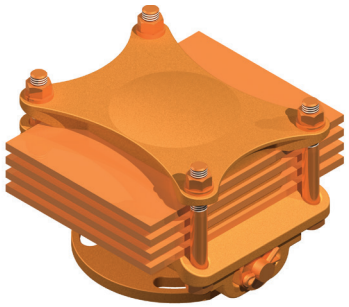

A horizontal type sliding bus support clamp for supporting one or more flat bars. The axle type support with slotted bracket provides for a 1 1/4 inch traverse. Accommodates any number of bars. Type SSHHD allows for double stack mounting by the provision of a 2 3/8 inch spacer for single bar or multi-bar systems. Unless otherwise specified type SSHH is supplied without spacers and type SSHHD is supplied with only the 2 3/8 inch double stack spacer.. Supplied with cap screws for cap mounting or bolts and nuts for base mounting.

Material

Copper Alloy

Hardware

Everdur bolts, nuts, lockwashers, flat washers, and stainless steel cotter pin
Mounting hardware galvanized steel

Note

- When ordering suffix the number of bars to be supported to catalog number and state bar thickness if other than 1/4 inch.
- For additional spacers for 1/4 inch bars spaced 1/4 inch apart please contact Dossert.

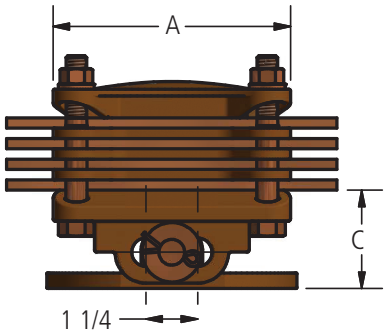

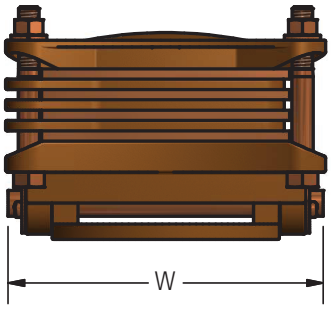

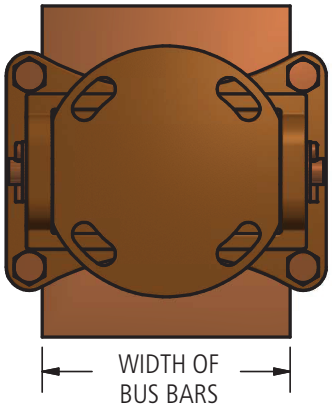

Ordering Information

CATALOG NUMBER		WIDTH OF BUS BARS	BOLT CIRCLE	DIMENSIONS IN INCHES			BOLT SIZE
				A	C	W	
SSHH2-3	SSHHD2-3	2	3	4 5/16	2 1/8	6 3/4	3/8
SSHH2-5	SSHHD2-5	2	5	4 5/16	2 1/4	6 3/4	3/8
SSHH3-3	SSHHD3-3	3	3	4 5/16	2 1/8	6 3/4	3/8
SSHH3-5	SSHHD3-5	3	5	4 5/16	2 1/4	6 3/4	3/8
SSHH4-3	SSHHD4-3	4	3	4 3/4	2 1/4	7 1/4	1/2
SSHH4-5	SSHHD4-5	4	5	4 3/4	2 1/2	7 1/4	1/2
SSHH5-3	SSHHD5-3	5	3	5 3/4	2 3/8	7 3/8	1/2
SSHH5-5	SSHHD5-5	5	5	5 3/4	2 5/8	7 3/8	1/2
SSHH6-3	SSHHD6-3	6	3	5 3/4	2 3/8	7 3/4	1/2
SSHH6-5	SSHHD6-5	6	5	5 3/4	2 5/8	7 3/4	1/2

© 2011, AFL, all rights reserved. PP-3-00463, Revision 0, 2.21.11
Specifications are subject to change without notice.

DOSSERT®

TYPE XBC

Copper Bus Support Coupler

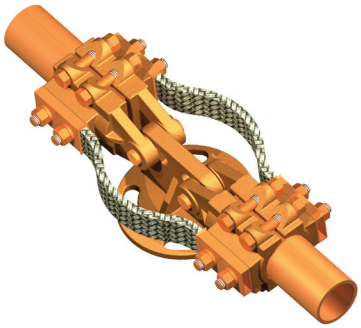

A bus support coupler with a flexible braid linkage designed to conduct the full rated load of the tubular buses and at the same time permit free axial movement of each bus member. The shackle type fitting allows slight angular deviation of the buses from the horizontal where they cannot be kept on a true plane.

Material

Copper Alloy

Hardware

Everdur bolts, nuts, lockwashers, galvanized steel clevis pin, and stainless steel cotter pin

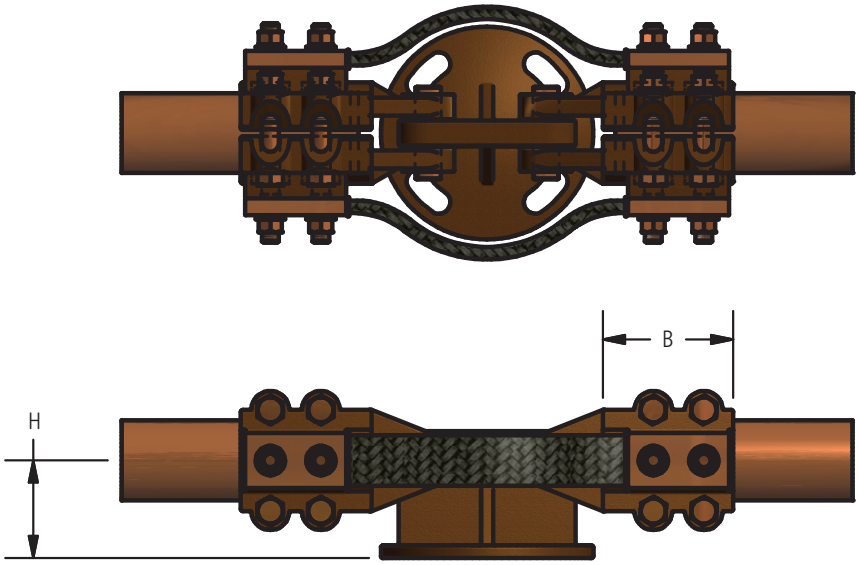

Ordering Information

CATALOG NUMBER	SPS	BOLT CIRCLE	DIMENSIONS IN INCHES		BOLT SIZE
			B	H	
XBC50-3	1/2	3	2 5/8	1 3/4	3/8
XBC50-5	1/2	5	2 5/8	2 1/8	3/8
XBC75-3	3/4	3	3	2	3/8
XBC75-5	3/4	5	3	2 1/4	3/8
XBC100-3	1	3	3	2	3/8
XBC100-5	1	5	3	2 1/4	3/8
XBC125-3	1 1/4	3	3	2 1/4	1/2
XBC125-5	1 1/4	5	3	2 3/8	1/2
XBC150-3	1 1/2	3	3 1/4	2 1/2	1/2
XBC150-5	1 1/2	5	3 1/4	2 1/2	1/2
XBC200-3	2	3	3 1/4	2 3/4	1/2
XBC200-5	2	5	3 1/4	2 3/4	1/2
XBC250-3	2 1/2	3	3 1/4	3 1/8	1/2
XBC250-5	2 1/2	5	3 1/4	3 1/8	1/2
XBC300-3	3	3	3 3/4	3 5/8	5/8
XBC300-5	3	5	3 3/4	3 5/8	5/8
XBC350-3	3 1/2	3	3 3/4	4	5/8
XBC350-5	3 1/2	5	3 3/4	4	5/8
XBC400-3	4	3	4	4 1/2	5/8
XBC400-5	4	5	4	4 1/2	5/8
XBC600-5	6	5	6 3/4	5 1/2	5/8

© 2011, AFL, all rights reserved. PP-3-00588, Revision 1, 5.9.2023
Specifications are subject to change without notice.

DOSSERT®

TYPE CCV-S

Copper Heavy Duty Variable Coupler for Cable

A cable to cable heavy duty variable type coupler. Each cable holding section accommodates a wide range of cable sizes.

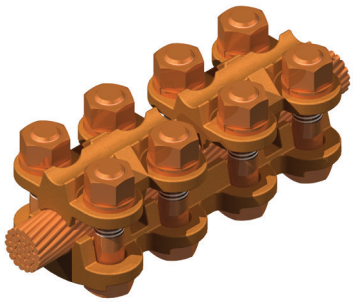

Material

Cast Copper Alloy

Hardware

Everdur bolts, nuts and lockwashers

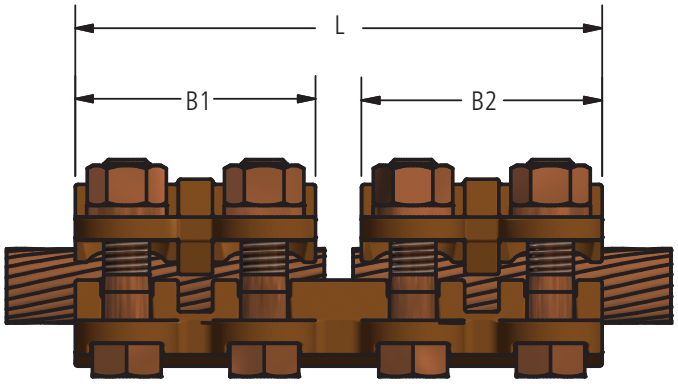

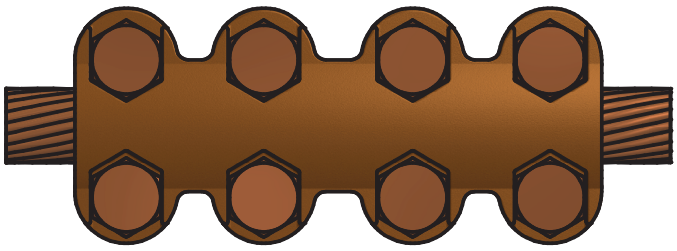

Ordering Information

CATALOG NUMBER	CABLE RANGE RUN		CABLE RANGE TAP		DIMENSIONS IN INCHES			BOLT SIZE
	MIN	MAX	MIN	MAX	B1	B2	L	
CCV50-50-S	1/0 SOL	500 MCM	1/0 SOL	500 MCM	2 5/8	2 5/8	5 3/4	1/2
CCV60-60-S	#4 SOL	600 MCM	#4 SOL	600 MCM	2 1/2	2 1/2	5 1/2	3/8
CCV80-80-S	2/0 SOL	800 MCM	2/0 SOL	800 MCM	2 7/8	2 7/8	6 1/4	1/2
CCV100-50-S	4/0 SOL	1000 MCM	1/0 SOL	500 MCM	2 5/8	2 7/8	5 3/4	1/2
CCV100-100-S	4/0 SOL	1000 MCM	4/0 SOL	1000 MCM	2 7/8	2 7/8	6	1/2
CCV150-150-S	250 MCM	1500 MCM	250 MCM	1500 MCM	3 3/8	3 3/8	7 1/4	1/2
CCV200-200-S	500 MCM	2000 MCM	500 MCM	2000 MCM	3 3/8	3 3/8	7 1/4	1/2

© 2011, AFL, all rights reserved. PP-3-00276, Revision 3, 9.20.18
Specifications are subject to change without notice.

DOSSERT®

TYPE CP

Pipe Coupler

A bolted clamp type connector for coupling standard pipe size tubular buses. Rigidly constructed to withstand high bending stresses.

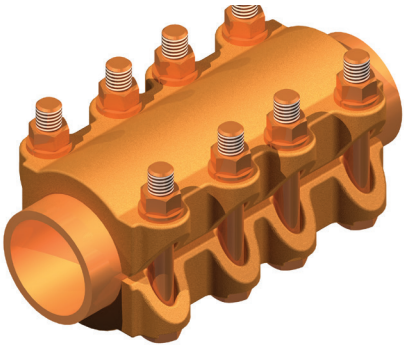

Material

Copper Alloy

Hardware

Everdur bolts, nuts and lockwashers

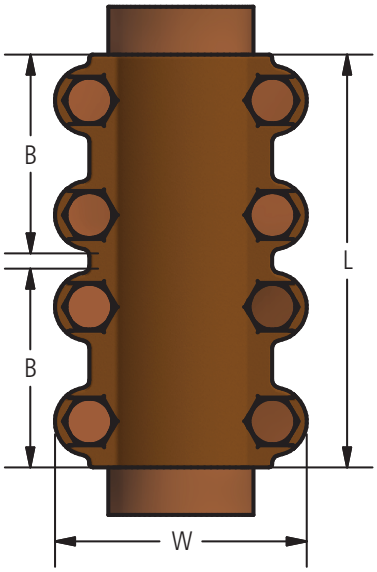

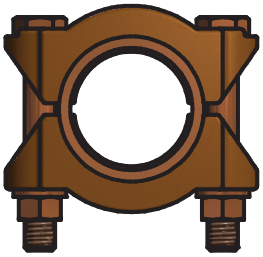

Ordering Information

CATALOG NUMBER	SPS	DIMENSIONS IN INCHES			BOLT SIZE
		B	L	W	
CP50	1/2	2-1/2	5-1/4	2-9/16	1/2
CP75	3/4	2-3/4	5-3/4	2-3/4	1/2
CP100	1	2-3/4	5-3/4	3-1/16	1/2
CP125	1-1/4	3	6-1/4	3-7/16	1/2
CP150	1-1/2	3	6-1/4	3-11/16	1/2
CP200	2	3-1/4	6-3/4	4-1/8	1/2
CP250	2-1/2	3-1/4	6-3/4	4-5/8	1/2
CP300	3	3-3/4	7-3/4	5-5/8	5/8
CP350	3-1/2	4	8-1/4	6-1/8	5/8
CP400	4	4-1/2	9-1/4	6-5/8	5/8
CP500	5	7	14-1/4	7-11/16	5/8
CP600	6	7	14-1/4	8-3/4	5/8

© 2011, AFL, all rights reserved. PP-3-00287, Revision 2, 2.15.2022
Specifications are subject to change without notice.

DOSSERT®

TYPE HC, HC-A

Copper Coupler For Cable

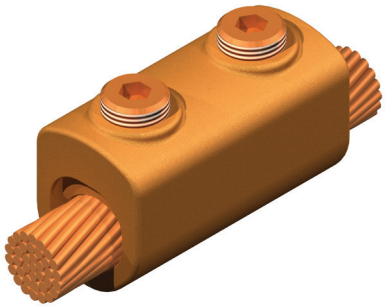

The HERCULON™ Coupler provides an inexpensive means for joining end to end cables of the same size or different size within a wide range of conductors. Complete installation is accomplished by merely tightening the two pressure screws.

Material

Copper Alloy

Hardware

Everdur pressure bolts

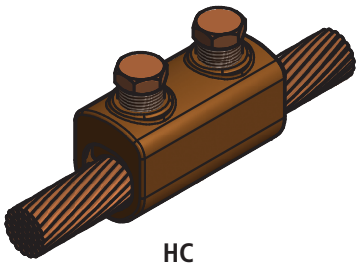

HC

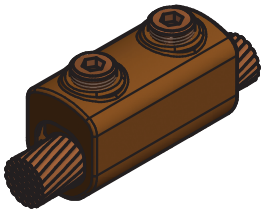

HC-A

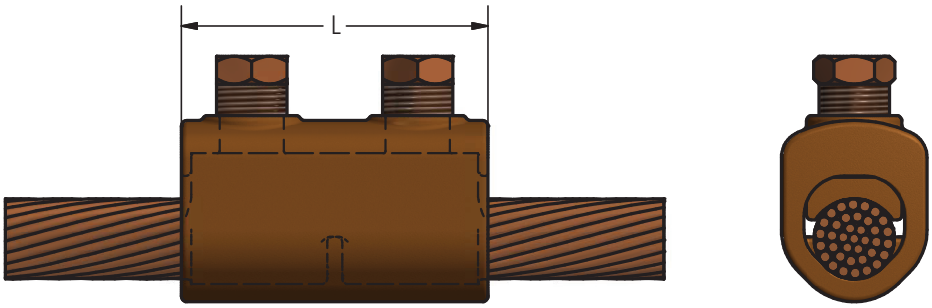

Ordering Information

CATALOG NUMBER		CABLE RANGE		DIMENSION IN INCHES
HEX BOLT	ALLEN HEAD BOLT	MINIMUM	MAXIMUM	L
HC4	HC4-A	8 Solid	4 Solid	1 1/4
HC8	HC8-A	4 Solid	1 Stranded	1 3/4
HC13	HC13-A	1 Stranded	2/0 STRanded	2
HC21	HC21-A	2/0 STRanded	4/0 STRanded	2 1/4
HC30	HC30-A	4/0 STRanded	300 MCM	2 9/16
HC35	HC35-A	250 MCM	350 MCM	2 3/4
HC50	HC50-A	300 MCM	500 MCM	3
HC75	HC75-A	500 MCM	750 MCM	3 1/4
HC100	HC100-A	750 MCM	1000 MCM	3 7/8

© 2011, AFL, all rights reserved. PP-3-00367, Revision 0, 2.21.11
Specifications are subject to change without notice.

DOSSERT®

TYPE RP

Copper Reducing Clamp for Tubular Bus

A clamp type reducing coupler for connecting various sizes of standard pipe size tubular buses end to end. Contact surfaces finished to provide a strong grip on the conductor and a good electrical contact.

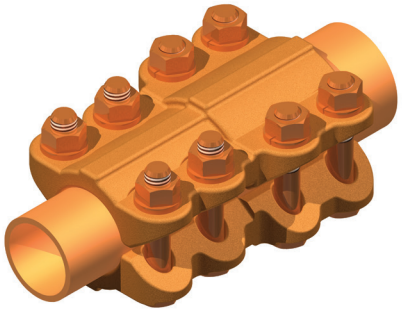

Material

Copper Alloy

Hardware

Everdur bolts, nuts and lockwashers

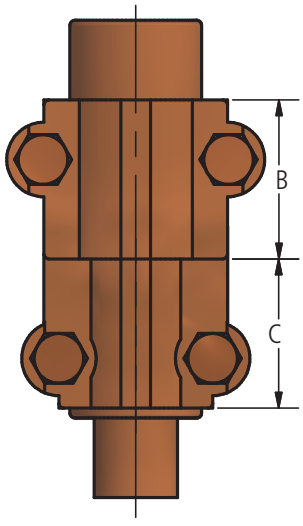

FIG. 1

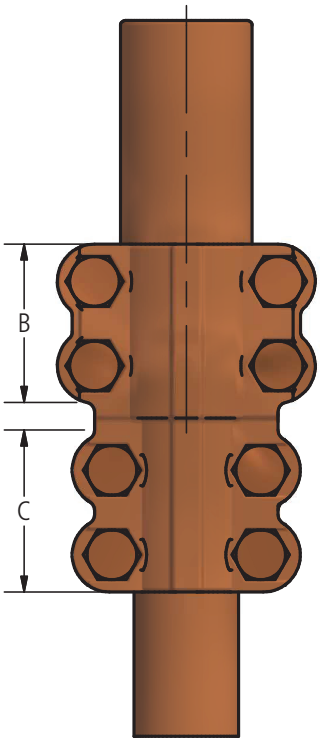

FIG. 2

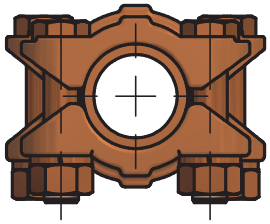

© 2011, AFL, all rights reserved. PP-3-00431, Revision 2, 2.14.2022
Specifications are subject to change without notice.

DOSSERT®

TYPE RP

Copper Reducing Clamp for Tubular Bus

Ordering Information

CATALOG NUMBER	SPS		FIG. NO.	DIMENSIONS IN INCHES		BOLT SIZE
	IN	OUT		B	C	
RP38-25	3/8	1/4	1	1 1/2	1 1/2	3/8
RP50-25	1/2	1/4	1	1 1/2	1 1/2	3/8
RP50-38	1/2	3/8	1	1 1/2	1 1/2	3/8
RP75-25	3/4	1/4	1	1 1/2	1 1/2	3/8
RP75-38	3/4	3/8	1	1 1/2	1 1/2	3/8
RP75-50	3/4	1/2	2	2	2	3/8
RP100-38	1	3/8	2	1 1/2	1 1/2	3/8
RP100-50	1	1/2	2	2 1/8	2 1/8	3/8
RP100-75	1	3/4	2	2 1/8	2 1/8	3/8
RP125-50	1 1/4	1/2	2	2 1/8	2 1/8	3/8
RP125-75	1 1/4	3/4	2	2 1/8	2 1/8	3/8
RP125-100	1 1/4	1	2	2 1/8	2 1/8	3/8
RP150-50	1 1/2	1/2	2	2 1/8	2 1/8	3/8
RP150-75	1 1/2	3/4	2	2 1/8	2 1/8	3/8
RP150-100	1 1/2	1	2	2 1/8	2 1/8	3/8
RP150-125	1 1/2	1 1/4	2	2 1/2	2 1/2	1/2
RP200-50	2	1/2	2	2 1/8	2 1/8	3/8
RP200-75	2	3/4	2	2 1/8	2 1/8	3/8
RP200-100	2	1	2	2 1/8	2 1/8	3/8
RP200-125	2	1 1/4	2	2 1/2	2 1/2	1/2
RP200-150	2	1 1/2	2	2 5/8	2 5/8	1/2
RP200-50	2 1/2	1/2	2	2 1/8	2 1/8	3/8
RP250-75	2 1/2	3/4	2	2 1/8	2 1/8	3/8
RP250-100	2 1/2	1	2	2 1/8	2 1/8	3/8
RP250-125	2 1/2	1 1/4	2	2 1/2	2 1/2	1/2
RP250-150	2 1/2	1 1/2	2	2 5/8	2 5/8	1/2
RP250-200	2 1/2	2	2	2 3/4	2 3/4	1/2
RP300-100	3	1	2	2 1/8	2 1/8	3/8
RP300-125	3	1 1/4	2	2 1/2	2 1/2	1/2
RP300-150	3	1 1/2	2	2 5/8	2 5/8	1/2
RP300-200	3	2	2	2 3/4	2 3/4	1/2
RP300-250	3	2 1/2	2	2 3/4	2 3/4	1/2
RP350-100	3 1/2	1	2	2 1/8	2 1/8	3/8
RP350-125	3 1/2	1 1/4	2	2 1/2	2 1/2	1/2
RP350-150	3 1/2	1 1/2	2	2 5/8	2 5/8	1/2
RP350-200	3 1/2	2	2	2 3/4	2 3/4	1/2
RP350-250	3 1/2	2 1/2	2	3 1/4	2 3/4	1/2
RP350-300	3 1/2	3	2	3 1/4	3 1/4	5/8
RP400-125	4	1 1/4	2	2 1/2	2 1/2	1/2
RP400-150	4	1 1/2	2	2 5/8	2 5/8	1/2
RP400-200	4	2	2	2 3/4	2 3/4	1/2
RP400-250	4	2 1/2	2	2 3/4	2 3/4	1/2
RP400-300	4	3	2	3 1/4	3 1/4	5/8
RP400-350	4	3 1/2	2	3 1/4	3 1/4	5/8

© 2011, AFL, all rights reserved. PP-3-00431, Revision 2, 2.14.2022
Specifications are subject to change without notice.

DOSSERT®

TYPE RPCV-S

Copper Pipe to Cable Coupler

A pipe to cable coupler which takes a wide range of cable sizes on the cable clamping member. All clamping members act independently.

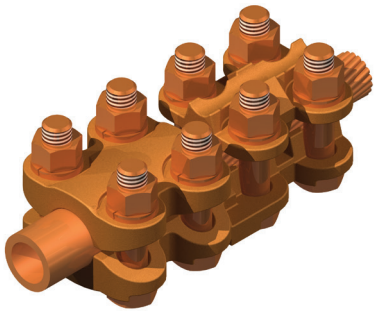

Material

High Conductivity Cast Copper Alloy

Hardware

Everdur bolts, nuts and lockwashers

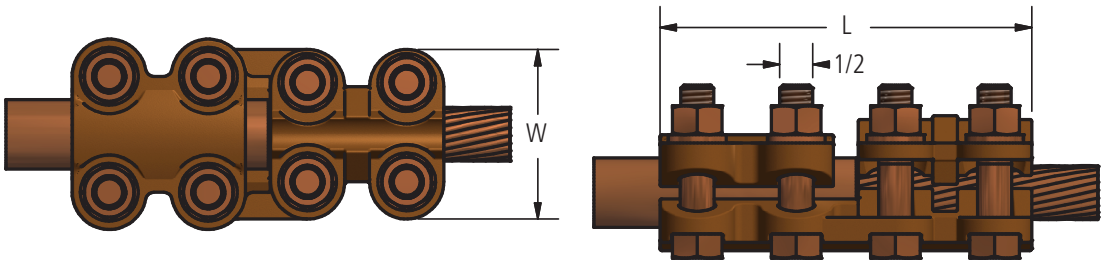

Ordering Information

CATALOG NUMBER	SPS	CABLE RANGE		DIMENSIONS IN INCHES	
		MIN	MAX	L	W
RPCV38-50-S	3/8	1/0 SOL	500 MCM	5 5/8	2 7/16
RPCV50-25	1/2	4 SOL	250 MCM	5 7/8	2 5/8
RPCV50-50-S	1/2	1/0 SOL	500 MCM	5 3/4	2 5/8
RPCV50-60-S	1/2	4 SOL	600 MCM	5 7/8	2 5/8
RPCV75-25	3/4	4 SOL	250 MCM	6	2 7/8
RPCV75-50-S	3/4	1/0 SOL	500 MCM	5 7/8	2 7/8
RPCV75-60-S	3/4	4 SOL	600 MCM	6	2 7/8
RPCV100-25	1	4 SOL	250 MCM	6	3 3/16
RPCV100-50-S	1	1/0 SOL	500 MCM	5 7/8	3 3/16
RPCV100-60-S	1	4 SOL	600 MCM	6	3 3/16
RPCV100-80-S	1	2/0 SOL	800 MCM	6 1/8	3 3/16
RPCV100-100-S	1	4/0 SOL	1000 MCM	6 1/8	2 7/8
RPCV125-25	1 1/4	4 SOL	250 MCM	5 7/8	3 7/16
RPCV125-50-S	1 1/4	1/0 SOL	500 MCM	5 3/4	3 7/16
RPCV125-60-S	1 1/4	4 SOL	600 MCM	5 7/8	3 7/16
RPCV125-80-S	1 1/4	2/0 SOL	800 MCM	6	3 7/16
RPCV125-100-S	1 1/4	4/0 SOL	1000 MCM	6	3 7/16
RPCV150-25	1 1/2	4 SOL	250 MCM	5 7/8	3 11/16
RPCV150-50-S	1 1/2	1/0 SOL	500 MCM	5 3/4	3 11/16
RPCV150-60-S	1 1/2	4 SOL	600 MCM	5 7/8	3 11/16
RPCV150-80-S	1 1/2	2/0 SOL	800 MCM	6	3 5/8
RPCV150-100-S	1 1/2	4/0 SOL	1000 MCM	6	3 5/8
RPCV150-150-S	1 1/2	4/0 SOL	2000 MCM	6 1/2	3 5/8
RPCV150-200-S	1 1/2	500 MCM	2000 MCM	6 1/2	3 5/8
RPCV200-25	2	4 SOL	250 MCM	6 1/8	4 1/8
RPCV200-50-S	2	1/0 SOL	500 MCM	6	4 1/8
RPCV200-60-S	2	4 SOL	600 MCM	6 1/8	4 1/8
RPCV200-80-S	2	2/0 SOL	800 MCM	6 1/4	4 1/8
RPCV200-100-S	2	4/0 SOL	1000 MCM	6 1/4	4 1/8
RPCV200-150-S	2	4/0 SOL	2000 MCM	6 3/4	4 1/8

CATALOG NUMBER	SPS	CABLE RANGE		DIMENSIONS IN INCHES	
		MIN	MAX	L	W
RPCV200-200-S	2	500 MCM	2000 MCM	6 3/4	4 1/8
RPCV250-25	2 1/2	4 SOL	250 MCM	6 1/8	4 5/8
RPCV250-50-S	2 1/2	1/0 SOL	500 MCM	6	4 5/8
RPCV250-60-S	2 1/2	4 SOL	600 MCM	6 1/8	4 5/8
RPCV250-80-S	2 1/2	2/0 SOL	800 MCM	6 1/4	4 5/8
RPCV250-100-S	2 1/2	4/0 SOL	1000 MCM	6 1/4	4 5/8
RPCV250-150-S	2 1/2	4/0 SOL	2000 MCM	6 3/4	4 5/8
RPCV250-200-S	2 1/2	500 MCM	2000 MCM	6 3/4	4 5/8
RPCV300-25	3	4 SOL	250 MCM	6 3/8	5 3/8
RPCV300-50-S	3	1/0 SOL	500 MCM	6 1/4	5 3/8
RPCV300-60-S	3	4 SOL	600 MCM	6 3/8	5 3/8
RPCV300-80-S	3	2/0 SOL	800 MCM	6 1/2	5 3/8
RPCV300-100-S	3	4/0 SOL	1000 MCM	6 1/2	5 3/8
RPCV300-150-S	3	4/0 SOL	2000 MCM	7	5 3/8
RPCV300-200-S	3	500 MCM	2000 MCM	7	5 7/8
RPCV350-25	3 1/2	4 SOL	250 MCM	6 1/2	6 1/8
RPCV350-50-S	3 1/2	1/0 SOL	500 MCM	6 1/4	5 7/8
RPCV350-60-S	3 1/2	4 SOL	600 MCM	6 3/8	5 7/8
RPCV350-80-S	3 1/2	2/0 SOL	800 MCM	6 1/2	5 7/8
RPCV350-100-S	3 1/2	4/0 SOL	1000 MCM	6 1/2	5 7/8
RPCV350-150-S	3 1/2	4/0 SOL	2000 MCM	7	5 7/8
RPCV350-200-S	3 1/2	500 MCM	2000 MCM	7	5 7/8
RPCV400-25	4	4 SOL	250 MCM	6 5/8	6 3/8
RPCV400-50-S	4	1/0 SOL	500 MCM	6 1/2	6 3/8
RPCV400-60-S	4	4 SOL	600 MCM	6 5/8	6 3/8
RPCV400-80-S	4	2/0 SOL	800 MCM	6 3/4	6 3/8
RPCV400-100-S	4	4/0 SOL	1000 MCM	6 3/4	6 3/8
RPCV400-150-S	4	4/0 SOL	2000 MCM	7 1/2	6 3/8
RPCV400-200-S	4	500 MCM	2000 MCM	7 1/2	6 3/8

© 2011, AFL, all rights reserved. PP-3-00434, Revision 1, 8.10.18
Specifications are subject to change without notice.

DOSSERT®

TYPE UK, UKT
Copper U-Bolt Coupler

A U-Bolt type straight connector for coupling two cables end to end. The the UKT connects a total of three cables. Each of the connector takes a wide range of cable sizes. Designed to provide high contact pressure on all cable sizes.

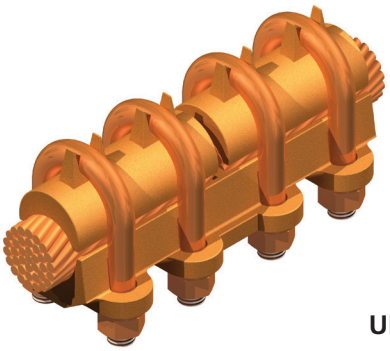

UK

Material

Copper Alloy

Hardware

Everdur U-bolts, nuts and lockwashers

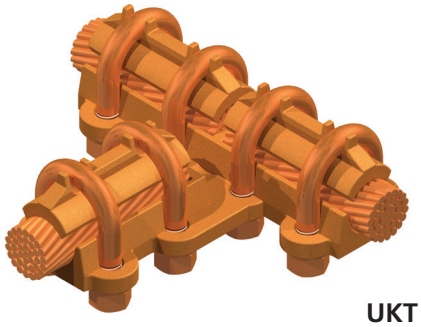

UKT

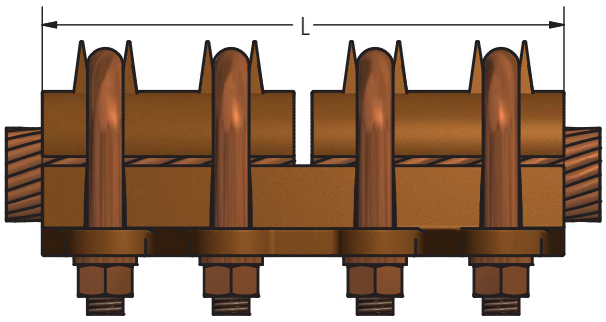

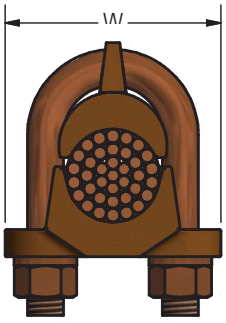

UK

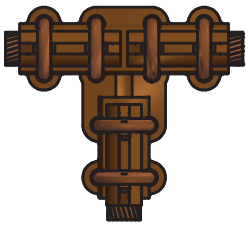

UKT

Ordering Information

CATALOG NUMBER		CABLE RANGE		DIMENSIONS IN INCHES		U-BOLT SIZE
UK	UKT	MIN	MAX	L	W	
UK13	UKT13-13	6 Str	2/0 STR	5 1/8	1 9/16	5/16
UK21	UKT21-21	1 Str	4/0 STR	5 3/8	1 7/8	3/8
UK30	UKT30-30	1/0 STR	300 MCM	5 5/8	1 15/16	3/8
UK50	UKT50-50	300 MCM	500 MCM	6 1/8	2 1/8	3/8
UK80	UKT80-80	500 MCM	800 MCM	6 5/8	2 13/16	1/2
UK100	UKT100-100	750 MCM	1000 MCM	7 1/8	2 15/16	1/2
UK150	UKT150-150	1000 MCM	1500 MCM	8 1/8	3 3/16	1/2
UK200	UKT200-200	1500 MCM	2000 MCM	9 1/8	3 3/8	1/2

© 2011, AFL, all rights reserved. PP-3-00493, Revision 0, 2.21.11
Specifications are subject to change without notice.

DOSSERT®

TYPE UKR

Copper U-Bolt Coupler Reducer

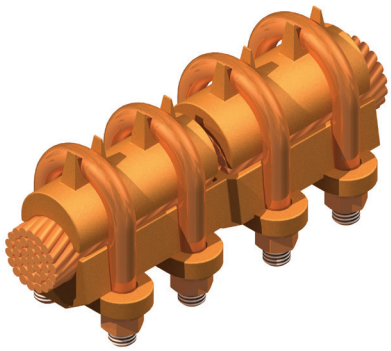

A U-Bolt type reducer connector for coupling end to end two unequal size cables. The variability of each half of the connector makes possible the combination of many sizes of cable.

Material

Copper Alloy

Hardware

Everdur U-bolts, nuts and lockwashers

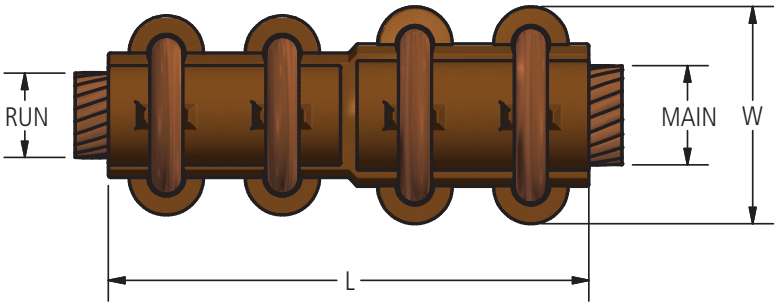

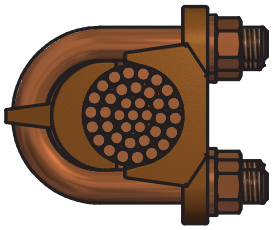

Ordering Information

CATALOG NUMBER	CABLE RANGE RUN		CABLE RANGE TAP		DIMENTSIONS IN INCHS		U-BOLT SIZE	
	MIN	MAX	MIN	MAX	L	W	MAIN	RUN
UKR21-13	1 Str	4/0 STR	6 Str	2/0 STR	5 1/4	1 7/8	3/8	5/16
UKR30-13	1/0 STR	300 MCM	6 Str	2/0 STR	5 3/8	1 15/16	3/8	5/16
UKR30-21	1/0 STR	300 MCM	1 Str	4/0 STR	5 1/2	1 15/16	3/8	3/8
UKR50-30	300 MCM	500 MCM	1/0 STR	300 MCM	5 7/8	2 1/8	3/8	3/8
UKR80-30	500 MCM	800 MCM	1/0 STR	300 MCM	6 1/8	2 13/16	1/2	3/8
UKR80-50	500 MCM	800 MCM	300 MCM	500 MCM	6 3/8	2 13/16	1/2	3/8
UKR100-30	750 MCM	1000 MCM	1/0 STR	300 MCM	6 3/8	2 15/16	1/2	3/8
UKR100-50	750 MCM	1000 MCM	300 MCM	500 MCM	6 5/8	2 15/16	1/2	3/8
UKR100-80	750 MCM	1000 MCM	500 MCM	800 MCM	6 7/8	2 15/16	1/2	1/2
UKR150-30	1000 MCM	1500 MCM	1/0 STR	300 MCM	6 15/16	3 3/16	1/2	3/8
UKR150-50	1000 MCM	1500 MCM	300 MCM	500 MCM	7 1/8	3 3/16	1/2	3/8
UKR150-80	1000 MCM	1500 MCM	500 MCM	800 MCM	7 3/8	3 3/16	1/2	1/2
UKR150-100	1000 MCM	1500 MCM	750 MCM	1000 MCM	7 5/8	3 3/16	1/2	1/2
UKR200-50	1500 MCM	2000 MCM	300 MCM	500 MCM	7 5/8	3 3/8	1/2	3/8
UKR200-80	1500 MCM	2000 MCM	500 MCM	800 MCM	7 7/8	3 3/8	1/2	1/2
UKR200-100	1500 MCM	2000 MCM	750 MCM	1000 MCM	8 1/8	3 3/8	1/2	1/2
UKR200-150	1500 MCM	2000 MCM	1000 MCM	1500 MCM	8 5/8	3 3/8	1/2	1/2

© 2011, AFL, all rights reserved. PP-3-00495, Revision 0, 2.21.11
Specifications are subject to change without notice.

DOSSERT®

TYPE UP2K, UP4K

Special Coupler For Cables To Tubular Bus

A special coupler for coupling cables to a copper tubular bus. Each cable position is designed to accommodate a wide range of cable sizes.

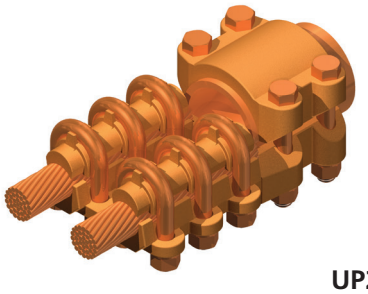

UP2K

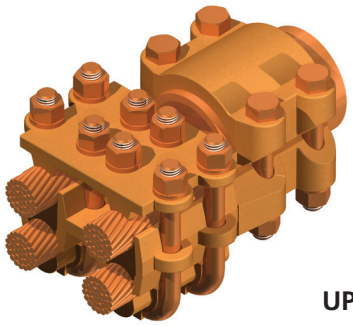

UP4K

Material

Copper Alloy

Hardware

Everdur bolts, nuts, lockwashers, and U-bolt

Note

- Please contact Factory for specific sizes For a four(4) cable coupler to pipe, replace UP2K with UP4K. EX: UP2K300-80 would be with two cables.
- UP4K300-80 would be with four cables.
- For tin plating add "-SN" to the end of catalog number.

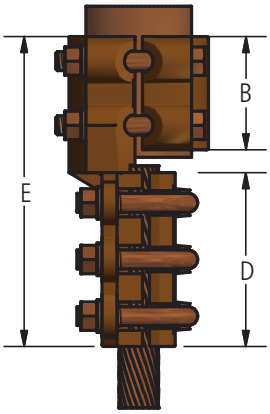

UP2K

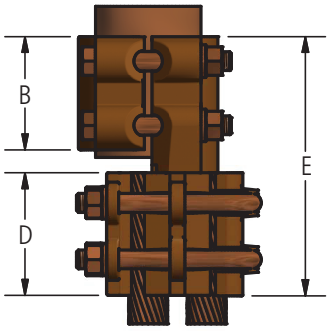

UP4K

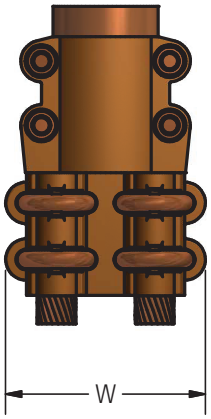

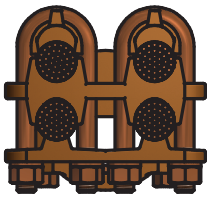

UP4K

© 2011, AFL, all rights reserved. PP-3-00507, Revision 1, 8.2.13
Specifications are subject to change without notice.

DOSSERT®

TYPE UP2K, UP4K

Special Coupler For Cables To Tubular Bus

Ordering Information

CATALOG NUMBER		PIPE SPS	CABLE RANGE RUN		DIMENSIONS IN INCHES					BOLT SIZE	
UP2K	UP4K		MIN	MAX	B	D	E	S	W	RUN	TAP
UP2K38-13	UP4K38-13	3/8	#6 Str	2/0 STR	2	2 1/2	4 7/8	1 11/16	3 1/4	3/8	5/16
UP2K50-13	UP4K50-13	1/2	#6 Str	2/0 STR	2	2 1/2	4 7/8	1 11/16	3 1/4	3/8	5/16
UP2K50-21	UP4K50-21	1/2	#1 Str	4/0 STR	2	2 5/8	5	1 31/32	3 3/4	3/8	3/8
UP2K50-30	UP4K50-30	1/2	1/0 STR	300 MCM	2	2 3/4	5 1/8	2 1/16	4	3/8	3/8
UP2K75-13	UP4K75-13	3/4	#6 Str	2/0 STR	2	2 1/2	4 7/8	1 11/16	3 1/4	3/8	5/16
UP2K75-21	UP4K75-21	3/4	#1 Str	4/0 STR	2	2 5/8	5	1 31/32	3 3/4	3/8	3/8
UP2K75-30	UP4K75-30	3/4	1/0 STR	300 MCM	2	2 3/4	5 1/8	2 1/16	4	3/8	3/8
UP2K75-50	UP4K75-50	3/4	300 MCM	500 MCM	2	3	5 3/8	2 1/4	4 3/8	3/8	3/8
UP2K100-13	UP4K100-13	1	#6 Str	2/0 STR	2 1/4	2 1/2	5 1/8	1 11/16	3 1/4	3/8	5/16
UP2K100-21	UP4K100-21	1	#1 Str	4/0 STR	2 1/4	2 5/8	5 1/4	1 31/32	3 3/4	3/8	3/8
UP2K100-30	UP4K100-30	1	1/0 STR	300 MCM	2 1/4	2 3/4	5 3/8	2 1/16	4	3/8	3/8
UP2K100-50	UP4K100-50	1	300 MCM	500 MCM	2 1/4	3	5 5/8	2 1/4	4 3/8	3/8	3/8
UP2K100-80	UP4K100-80	1	500 MCM	800 MCM	2 3/4	3 1/4	6 3/8	2 27/32	5 1/2	1/2	1/2
UP2K125-13	UP4K125-13	1 1/4	#6 Str	2/0 STR	2 1/4	2 1/2	5 1/8	1 11/16	3 1/4	3/8	5/16
UP2K125-21	UP4K125-21	1 1/4	#1 Str	4/0 STR	2 1/4	2 5/8	5 1/4	1 31/32	3 3/4	3/8	3/8
UP2K125-30	UP4K125-30	1 1/4	1/0 STR	300 MCM	2 1/4	2 3/4	5 3/8	2 1/16	4	3/8	3/8
UP2K125-50	UP4K125-50	1 1/4	300 MCM	500 MCM	2 1/4	3	5 5/8	2 1/4	4 3/8	3/8	3/8
UP2K125-80	UP4K125-80	1 1/4	500 MCM	800 MCM	2 3/4	3 1/4	6 3/8	2 27/32	5 1/2	1/2	1/2
UP2K125-100	UP4K125-100	1 1/4	750 MCM	1000 MCM	2 3/4	3 1/2	6 5/8	3	5 7/8	1/2	1/2
UP2K150-21	UP4K150-21	1 1/2	#1 Str	4/0 STR	2 1/4	2 5/8	5 1/4	1 31/32	3 3/4	3/8	3/8
UP2K150-30	UP4K150-30	1 1/2	1/0 STR	300 MCM	2 1/4	2 3/4	5 3/8	2 1/16	4	3/8	3/8
UP2K150-50	UP4K150-50	1 1/2	300 MCM	500 MCM	2 1/4	3	5 5/8	2 1/4	4 3/8	3/8	3/8
UP2K150-80	UP4K150-80	1 1/2	500 MCM	800 MCM	2 3/4	3 1/4	6 3/8	2 27/32	5 1/2	1/2	1/2
UP2K150-100	UP4K150-100	1 1/2	750 MCM	1000 MCM	2 3/4	3 1/2	6 5/8	3	5 7/8	1/2	1/2
UP2K200-21	UP4K200-21	2	#1 Str	4/0 STR	2 1/4	2 5/8	5 3/8	1 31/32	3 3/4	3/8	3/8
UP2K200-30	UP4K200-30	2	1/0 STR	300 MCM	2 1/4	2 3/4	5 1/2	2 1/16	4	3/8	3/8
UP2K200-50	UP4K200-50	2	300 MCM	500 MCM	2 1/4	3	5 3/4	2 1/4	4 3/8	3/8	3/8
UP2K200-80	UP4K200-80	2	500 MCM	800 MCM	2 3/4	3 1/4	6 1/2	2 27/32	5 1/2	1/2	1/2
UP2K200-100	UP4K200-100	2	750 MCM	1000 MCM	2 3/4	3 1/2	6 3/4	3	5 7/8	1/2	1/2
UP2K200-150	UP4K200-150	2	1000 MCM	1500 MCM	2 3/4	4	7 1/4	3 1/4	6 5/8	1/2	1/2
UP2K250-30	UP4K250-30	2 1/2	1/0 STR	300 MCM	2 1/4	2 3/4	5 1/2	2 1/16	4	3/8	3/8
UP2K250-50	UP4K250-50	2 1/2	300 MCM	500 MCM	2 1/4	3	5 3/4	2 1/4	4 3/8	3/8	3/8
UP2K250-80	UP4K250-80	2 1/2	500 MCM	800 MCM	2 3/4	3 1/4	6 1/2	2 27/32	5 1/2	1/2	1/2
UP2K250-100	UP4K250-100	2 1/2	750 MCM	1000 MCM	2 3/4	3 1/2	6 3/4	3	5 7/8	1/2	1/2
UP2K250-150	UP4K250-150	2 1/2	1000 MCM	1500 MCM	2 3/4	4	7 1/4	3 1/4	6 5/8	1/2	1/2
UP2K300-30	UP4K300-30	3	1/0 STR	300 MCM	2 1/4	2 3/4	5 1/2	2 1/16	4	3/8	3/8
UP2K300-50	UP4K300-50	3	300 MCM	500 MCM	2 1/4	3	5 3/4	2 1/4	4 3/8	3/8	3/8
UP2K300-80	UP4K300-80	3	500 MCM	800 MCM	2 3/4	3 1/4	6 1/2	2 27/32	5 1/2	1/2	1/2
UP2K300-100	UP4K300-100	3	750 MCM	1000 MCM	2 3/4	3 1/2	6 3/4	3	5 7/8	1/2	1/2
UP2K300-150	UP4K300-150	3	1000 MCM	1500 MCM	2 3/4	4	7 1/4	3 1/4	6 5/8	1/2	1/2
UP2K350-30	UP4K350-30	3 1/2	1/0 STR	300 MCM	2 1/4	2 3/4	5 1/2	2 1/16	4	3/8	3/8
UP2K350-50	UP4K350-50	3 1/2	300 MCM	500 MCM	2 1/4	3	5 3/4	2 1/4	4 3/8	3/8	3/8
UP2K350-80	UP4K350-80	3 1/2	500 MCM	800 MCM	2 3/4	3 1/4	6 1/2	2 27/32	5 1/2	1/2	1/2
UP2K350-100	UP4K350-100	3 1/2	750 MCM	1000 MCM	2 3/4	3 1/2	6 3/4	3	5 7/8	1/2	1/2
UP2K350-150	UP4K350-150	3 1/2	1000 MCM	1500 MCM	2 3/4	4	7 1/4	3 1/4	6 5/8	1/2	1/2
UP2K400-30	UP4K400-30	4	1/0 STR	300 MCM	2 1/4	2 3/4	5 1/2	2 1/16	4	3/8	3/8
UP2K400-50	UP4K400-50	4	300 MCM	500 MCM	2 1/2	3	5 3/4	2 1/4	4 3/8	3/8	3/8
UP2K400-80	UP4K400-80	4	500 MCM	800 MCM	2 3/4	3 1/4	6 1/2	2 27/32	5 1/2	1/2	1/2
UP2K400-100	UP4K400-100	4	750 MCM	1000 MCM	2 3/4	3 1/2	6 3/4	3	5 7/8	1/2	1/2
UP2K400-150	UP4K400-150	4	1000 MCM	1500 MCM	2 3/4	4	7 1/4	3 1/4	6 5/8	1/2	1/2

© 2011, AFL, all rights reserved. PP-3-00507, Revision 1, 8.2.13
Specifications are subject to change without notice.

DOSSERT®

TYPE UPK

Copper U-Bolt Coupler for Pipe to Cable

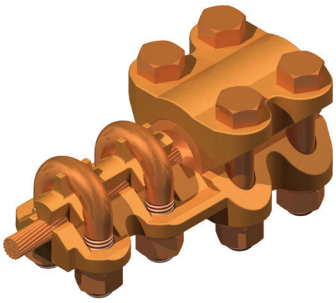

A U-bolt cable to pipe coupler. Made of high conductivity copper alloy and designed for rugged service. The variable U-bolt feature makes it possible for a connector for a given pipe size to accommodate individually several different cable sizes.

Material

Copper Alloy

Hardware

Everdur bolts, nuts, lockwashers, and U-bolts

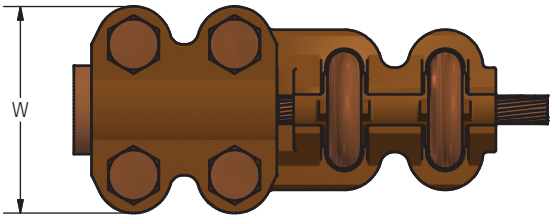

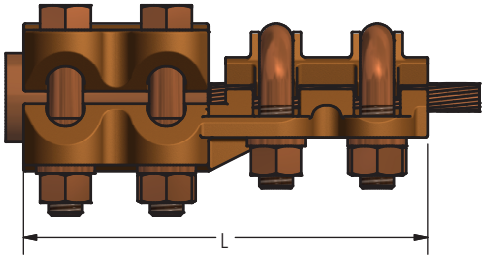

Ordering Information

CATALOG NUMBER	SPS	CABLE RANGE		DIMENSIONS IN INCHES		BOLT DIAMETER	
		MIN	MAX	L	W	PIPE	CABLE
UPK50-13	1/2	6 Str	2/0 STR	4	2 7/32	3/8	3/8
UPK50-21	1/2	1 Str	4/0 STR	4 1/8	2 7/32	3/8	3/8
UPK50-30	1/2	1/0 STR	300 MCM	4 1/4	2 7/32	3/8	3/8
UPK75-13	3/4	6 Str	2/0 STR	4 1/4	2 7/16	3/8	3/8
UPK75-21	3/4	1 Str	4/0 STR	4 3/8	2 7/16	3/8	3/8
UPK75-30	3/4	1/0 STR	300 MCM	4 1/2	2 7/16	3/8	3/8
UPK75-50	3/4	300 MCM	500 MCM	4 3/4	2 7/16	3/8	3/8
UPK100-13	1 Str	-	2/0 STR	4 1/4	2 11/16	3/8	3/8
UPK100-21	1 Str	1 Str	4/0 STR	4 3/8	2 11/16	3/8	3/8
UPK100-30	1 Str	1/0 STR	300 MCM	4 1/2	2 11/16	3/8	3/8
UPK100-50	1 Str	300 MCM	500 MCM	4 7/8	2 11/16	3/8	3/8
UPK100-80	1 Str	500 MCM	800 MCM	5 3/4	2 11/16	3/8	1/2
UPK125-13	1 1/4	6 Str	2/0 STR	4 3/8	3 1/2	3/8	3/8
UPK125-21	1 1/4	1 Str	4/0 STR	4 1/2	3 1/2	3/8	3/8
UPK125-30	1 1/4	1/0 STR	300 MCM	4 5/8	3 1/2	3/8	3/8
UPK125-50	1 1/4	300 MCM	500 MCM	4 7/8	3 1/2	3/8	3/8
UPK125-80	1 1/4	500 MCM	800 MCM	6 Str	3 1/2	1/2	1/2
UPK125-100	1 1/4	750 MCM	1000 MCM	6 1/4	3 1/2	1/2	1/2
UPK150-21	1 1/2	1 Str	4/0 STR	4 5/8	3 3/4	3/8	3/8
UPK150-30	1 1/2	1/0 STR	300 MCM	4 3/4	3 3/4	3/8	3/8
UPK150-50	1 1/2	300 MCM	500 MCM	5	3 3/4	3/8	3/8
UPK150-80	1 1/2	500 MCM	800 MCM	6 1/2	3 3/4	1/2	1/2
UPK1 50-1 00	1 1/2	750 MCM	1000 MCM	6 3/4	3 3/4	1/2	1/2
UPK200-21	2	1 Str	4/0 STR	4 5/8	4 3/16	3/8	3/8
UPK200-30	2	1/0 STR	300 MCM	4 3/4	4 3/16	3/8	3/8
UPK200-50	2	300 MCM	500 MCM	5	4 3/16	3/8	3/8
UPK200-80	2	500 MCM	800 MCM	6 3/4	4 3/16	1/2	1/2
UPK200-100	2	750 MCM	1000 MCM	6 3/4	4 3/16	1/2	1/2
UPK200-150	2	1000 MCM	1500 MCM	7 1/4	4 3/16	1/2	1/2
UPK250-21	2 1/2	1 Str	4/0 STR	4 5/8	4 11/16	3/8	3/8
UPK250-30	2 1/2	1/0 STR	300 MCM	4 3/4	4 11/16	3/8	3/8
UPK250-50	2 1/2	300 MCM	500 MCM	5	4 11/16	3/8	3/8
UPK250-80	2 1/2	500 MCM	800 MCM	6 1/2	4 11/16	1/2	1/2
UPK250-100	2 1/2	750 MCM	1000 MCM	6 3/4	4 11/16	1/2	1/2
UPK250-150	2 1/2	1000 MCM	1500 MCM	7 1/4	4 11/16	1/2	1/2
UPK300-30	3	1/0 STR	300 MCM	4 3/4	5 3/4	3/8	3/8
UPK300-50	3	300 MCM	500 MCM	5	5 3/4	3/8	3/8
UPK300-80	3	500 MCM	800 MCM	6 3/4	5 3/4	1/2	1/2
UPK300-100	3	750 MCM	1000 MCM	7	5 3/4	1/2	1/2
UPK300-150	3	1000 MCM	1500 MCM	7 1/4	5 3/4	1/2	1/2
UPK400-30	4	1/0 STR	300 MCM	4 3/4	6 3/4	3/8	3/8
UPK400-50	4	300 MCM	500 MCM	5	6 3/4	3/8	3/8
UPK400-80	4	500 MCM	800 MCM	6 3/4	6 3/4	1/2	1/2
UPK400-100	4	750 MCM	1000 MCM	7	6 3/4	1/2	1/2
UPK400-150	4	1000 MCM	1500 MCM	7 1/2	6 3/4	1/2	1/2
UPK400-200	4	1500 MCM	2000 MCM	8	6 3/4	1/2	1/2

© 2011, AFL, all rights reserved. PP-3-00509, Revision 0, 2.21.11
Specifications are subject to change without notice.

DOSSERT®

TYPE CF-N (NEMA Pad Sizes)

Flexible Copper Braid

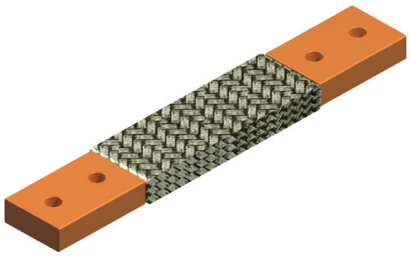

Flexible copper braid for linking conductors that are subject to motion. The braid is tin plated copper wire, terminated at each end by a non-plated copper pad.

Material

Copper Alloy

Notes

- Braid may be custom made for any configuration of length, pad size and hole diameter.
- For Electro Tin Plate, add suffix "-SN" to end of catalog number. Ex: CF771-10-N-SN
- For Undrilled Pad, add suffix "-U" to pad size in catalog number. Ex: CF772-16-N-U

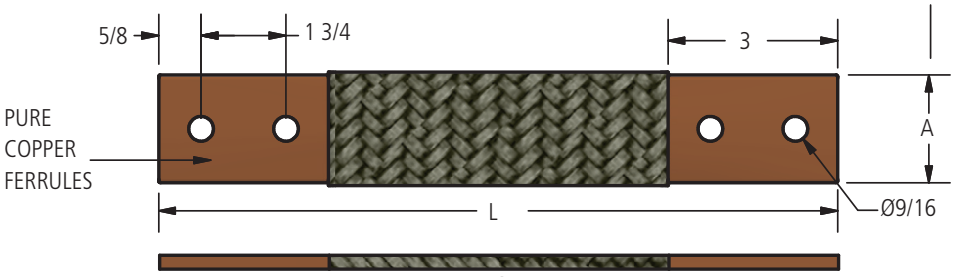

FIG. 1



FIG. 2

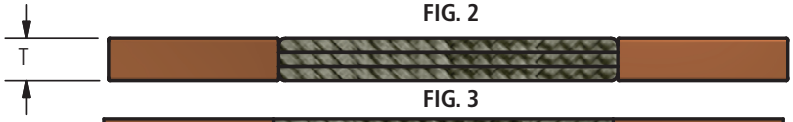

FIG. 3

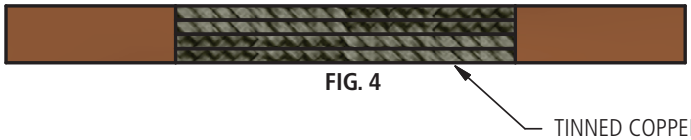

FIG. 4

TINNED COPPER BRAID

Ordering Information

CATALOG NUMBER	FIG. NO.	INDOOR AMPERE RATING*	DIMENSIONS IN INCHES		
			A	L	T
CF 724-12-N	4	520	1 1/2	12	1/4
CF 771-10-N	1	190	1	10	3/16
CF 771-16-N	1	190	1	16	3/16
CF 771-18-N	1	190	1	18	3/16
CF 771-20-N	1	190	1	20	3/16
CF 771-24-N	1	190	1	24	3/16
CF 771-36-N	1	190	1	36	3/16
CF 772-16-N	2	330	1	16	1/4
CF 772-18-N	2	330	1	18	1/4
CF 772-20-N	2	330	1	20	1/4
CF 772-21-N	2	330	1	21	1/4
CF 772-24-N	2	330	1	24	1/4
CF 772-30-N	2	330	1	30	1/4
CF 773-15-N	3	470	1	15	5/16
CF 773-16-N	3	470	1	16	5/16
CF 773-18-N	3	470	1	18	5/16
CF 773-20-N	3	470	1	20	5/16
CF 773-24-N	3	470	1	24	5/16

***Note:** A.C. Ampere ratings in still but confined air for maximum temperature rise 30°C above 40°C ambient with major surfaces of braid in horizontal position.

© 2011, AFL, all rights reserved. PP-3-00279, Revision 2, 3.6.17
Specifications are subject to change without notice.

DOSSERT®

TYPE CF-N (NEMA Pad Sizes)

Flexible Copper Braid

Ordering Information

CATALOG NUMBER	FIG. NO.	INDOOR AMPERE RATING*	DIMENSIONS IN INCHES		
			A	L	T
CF 774-16-N	4	600	1	16	3/8
CF 774-18-N	4	600	1	18	3/8
CF 774-20-N	4	600	1	20	3/8
CF 774-24-N	4	600	1	24	3/8
CF 1051-16-N	1	255	1 1/2	16	5/32
CF 1051-18-N	1	255	1 1/2	18	5/32
CF 1051-20-N	1	255	1 1/2	20	5/32
CF 1051-24-N	1	255	1 1/2	24	5/32
CF 1052-16-N	2	360	1 1/2	16	7/32
CF 1052-18-N	2	360	1 1/2	18	7/32
CF 1052-20-N	2	360	1 1/2	20	7/32
CF 1052-24-N	2	360	1 1/2	24	7/32
CF 1053-16-N	3	570	1 1/2	16	9/32
CF 1053-18-N	3	570	1 1/2	18	9/32
CF 1053-20-N	3	570	1 1/2	20	9/32
CF 1053-24-N	3	570	1 1/2	24	9/32
CF 1054-16-N	4	650	1 1/2	16	11/32
CF 1054-18-N	4	650	1 1/2	18	11/32
CF 1054-20-N	4	650	1 1/2	20	11/32
CF 1054-24-N	4	650	1 1/2	24	11/32
CF 1541-16-N	1	340	1 1/2	16	3/16
CF 1541-18-N	1	340	1 1/2	18	3/16
CF 1541-20-N	1	340	1 1/2	20	3/16
CF 1541-24-N	1	340	1 1/2	24	3/16
CF 1542-16-N	2	530	1 1/2	16	1/4
CF 1542-18-N	2	530	1 1/2	18	1/4
CF 1542-20-N	2	530	1 1/2	20	1/4
CF 1542-24-N	2	530	1 1/2	24	1/4
CF 1542-25-N	2	530	1 1/2	25	1/4
CF 1542-36-N	2	530	1 1/2	36	1/4
CF 1543-16-N	3	700	1 1/2	16	5/16
CF 1543-18-N	3	700	1 1/2	18	5/16
CF 1543-20-N	3	700	1 1/2	20	5/16
CF 1543-21-N	3	700	1 1/2	21	5/16
CF 1543-23-N	3	700	1 1/2	23	5/16
CF 1543-24-N	3	700	1 1/2	24	5/16
CF 1544-16-N	4	850	1 1/2	16	13/32
CF 1544-16 1/2-N	4	850	1 1/2	16 1/2	13/32
CF 1544-18-N	4	850	1 1/2	18	13/32
CF 1544-20-N	4	850	1 1/2	20	13/32
CF 1544-24-N	4	850	1 1/2	24	13/32
CF 2301-16-N	1	360	1 1/2	16	1/4
CF 2301-18-N	1	360	1 1/2	18	1/4
CF 2301-20-N	1	360	1 1/2	20	1/4
CF 2301-24-N	1	360	1 1/2	24	1/4
CF 2301-30-N	1	360	1 1/2	30	1/4
CF 2302-9-N	2	600	1 1/2	9	3/8
CF 2302-16-N	2	600	1 1/2	16	3/8
CF 2302-18-N	2	600	1 1/2	18	3/8
CF 2302-20-N	2	600	1 1/2	20	3/8
CF 2302-24-N	2	600	1 1/2	24	3/8
CF 2302-25-N	2	600	1 1/2	25	3/8
CF 2302-30-N	2	600	1 1/2	30	3/8
CF 2303-15-N	3	820	1 1/2	15	1/2
CF 2303-16-N	3	820	1 1/2	16	1/2
CF 2303-18-N	3	820	1 1/2	18	1/2
CF 2303-20-N	3	820	1 1/2	20	1/2
CF 2303-22-N	3	820	1 1/2	22	1/2
CF 2303-24-N	3	820	1 1/2	24	1/2
CF 2303-25-N	3	820	1 1/2	25	1/2
CF 2304-15 1/2-N	4	1000	1 1/2	15 1/2	13/16
CF 2304-16-N	4	1000	1 1/2	16	13/16

***Note:** A.C. Ampere ratings in still but confined air for maximum temperature rise 30°C above 40°C ambient with major surfaces of braid in horizontal position.

© 2011, AFL, all rights reserved. PP-3-00279, Revision 2, 3.6.17
Specifications are subject to change without notice.

DOSSERT®

TYPE CF-N (NEMA Pad Sizes)

Flexible Copper Braid

Ordering Information

CATALOG NUMBER	FIG. NO.	INDOOR AMPERE RATING*	DIMENSIONS IN INCHES		
			A	L	T
CF 2304-18-N	4	1000	1 1/2	18	13/16
CF 2304-20-N	4	1000	1 1/2	20	13/16
CF 2304-24-N	4	1000	1 1/2	24	13/16
CF 2304-36-N	4	1000	1 1/2	36	13/16
CF 2304-42-N	4	1000	1 1/2	42	13/16
CF 3021-9 1/2-N	1	415	1 1/2	9 1/2	5/16
CF3021-14-N	1	415	1 1/2	14	5/16
CF 3021-16-N	1	415	1 1/2	16	5/16
CF 3021-18-N	1	415	1 1/2	18	5/16
CF 3021-20-N	1	415	1 1/2	20	5/16
CF 3201-24-N	1	415	1 1/2	24	5/16
CF 3021-27-N	1	415	1 1/2	27	5/16
CF 3022-9 3/4-N	2	700	1 1/2	9 3/4	1/2
CF 3022-10 1/2-N	2	700	1 1/2	10 1/2	1/2
CF 3022-14-N	2	700	1 1/2	14	1/2
CF 3022-16-N	2	700	1 1/2	16	1/2
CF 3022-18-N	2	700	1 1/2	18	1/2
CF 3022-20-N	2	700	1 1/2	20	1/2
CF 3022-24-N	2	700	1 1/2	24	1/2
CF 3022-30-N	2	700	1 1/2	30	1/2
CF 3022-60-N	2	700	1 1/2	60	1/2
CF 3023-16-N	3	960	1 1/2	16	13/16
CF 3023-18-N	3	960	1 1/2	18	13/16
CF 3023-20-N	3	960	1 1/2	20	13/16
CF 3023-24-N	3	960	1 1/2	24	13/16
CF 3024-14-N	4	1200	1 1/2	14	15/16
CF 3024-16-N	4	1200	1 1/2	16	15/16
CF 3024-18-N	4	1200	1 1/2	18	15/16
CF 3024-20-N	4	1200	1 1/2	20	15/16
CF 3024-24-N	4	1200	1 1/2	24	15/16
CF 3024-28-N	4	1200	1 1/2	28	15/16
CF 3024-29-N	4	1200	1 1/2	29	15/16
CF 3024-64-N	4	1200	1 1/2	64	15/16

***Note:** A.C. Ampere ratings in still but confined air for maximum temperature rise 30°C above 40°C ambient with major surfaces of braid in horizontal position.

© 2011, AFL, all rights reserved. PP-3-00279, Revision 2, 3.6.17
Specifications are subject to change without notice.

DOSSERT®

TYPE CF

Flexible Copper Braid

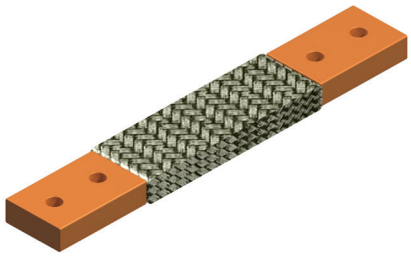

Flexible copper braid for linking conductors that are subject to motion. The braid is tin plated copper wire, terminated at each end by a non-plated pad.

Material

Copper

Note

- Braid may be custom made for any configuration of length, pad size or hole diameter.
- For tin plated contact pads add suffix "-SN" to end of catalog number. Ex: CF771-SN
- For undrilled contact pads add suffix "-U" to end of catalog number. Ex: CF771-U
- For undrilled contact pads and tin plated pads, add suffix "-U-SN" to end of catalog number. Ex: CF771-U-SN

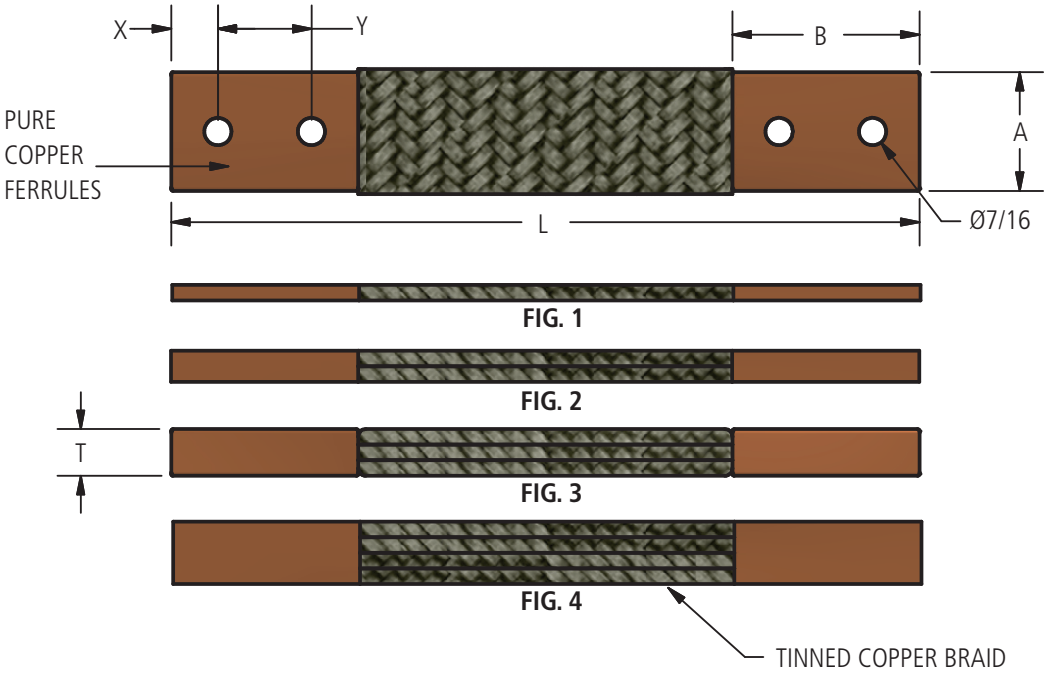

© 2011, AFL, all rights reserved. PP-3-00277, Revision 0, 2.24.11
Specifications are subject to change without notice.

DOSSERT®

TYPE CF

Flexible Copper Braid

Ordering Information

CATALOG NUMBER	CIRCULAR MIL AREA	FIGURE NO.	INDOOR AMPERE RATING*	DIMENSIONS IN INCHES					
				A	B	L	T	X	Y
CF771	76,800	1	190	1	2 5/8	12	3/16	11/16	1 1/4
CF771-7	76,800	1	190	1	2 5/8	7	3/16	11/16	1 1/4
CF771-10	76,800	1	190	1	2 5/8	10	3/16	11/16	1 1/4
CF771-11	76,800	1	190	1	2 5/8	11	3/16	11/16	1 1/4
CF771-15	76,800	1	190	1	2 5/8	15	3/16	11/16	1 1/4
CF771-18	76,800	1	190	1	2 5/8	18	3/16	11/16	1 1/4
CF771-20	76,800	1	190	1	2 5/8	20	3/16	11/16	1 1/4
CF771-24	76,800	1	190	1	2 5/8	24	3/16	11/16	1 1/4
CF771-36	76,800	1	190	1	2 5/8	36	3/16	11/16	1 1/4
CF772	153,600	2	330	1	2 5/8	12	1/4	11/16	1 1/4
CF772-10	153,600	2	330	1	2 5/8	10	1/4	11/16	1 1/4
CF772-18	153,600	2	330	1	2 5/8	18	1/4	11/16	1 1/4
CF773	230,400	3	470	1	2 5/8	12	5/16	11/16	1 1/4
CF774-14	230,400	4	600	1	2 5/8	14	5/16	11/16	1 1/4
CF774-16	230,400	4	600	1	2 5/8	16	5/16	11/16	1 1/4
CF774-19 21/32	230,400	4	600	1	2 5/8	19 21/32	5/16	11/16	1 1/4
CF774-24	230,400	4	600	1	2 5/8	24	5/16	11/16	1 1/4
CF1541	153,600	1	340	1 1/2	3	12	3/16	3/4	1 1/2
CF1541-18	153,600	1	340	1 1/2	3	18	3/16	3/4	1 1/2
CF1541-24	153,600	1	340	1 1/2	3	24	3/16	3/4	1 1/2
CF1542	307,200	2	530	1 1/2	3	12	1/4	3/4	1 1/2
CF1542-18	307,200	2	530	1 1/2	3	18	1/4	3/4	1 1/2
CF1542-22	307,200	2	530	1 1/2	3	22	1/4	3/4	1 1/2
CF1542-24	307,200	2	530	1 1/2	3	24	1/4	3/4	1 1/2
CF1543	460,800	3	700	1 1/2	3	12	5/16	3/4	1 1/2
CF1543-14	460,800	3	700	1 1/2	3	14	5/16	3/4	1 1/2
CF1543-14 1/2	460,800	3	700	1 1/2	3	14 1/2	5/16	3/4	1 1/2
CF1543-16	460,800	3	700	1 1/2	3	16	5/16	3/4	1 1/2
CF1543-18	460,800	3	700	1 1/2	3	18	5/16	3/4	1 1/2
CF1543-20	460,800	3	700	1 1/2	3	20	5/16	3/4	1 1/2
CF1543-24	460,800	3	700	1 1/2	3	24	5/16	3/4	1 1/2
CF1543-28	460,800	3	700	1 1/2	3	28	5/16	3/4	1 1/2
CF1543-30	460,800	3	700	1 1/2	3	30	5/16	3/4	1 1/2
CF1543-36	460,800	3	700	1 1/2	3	36	5/16	3/4	1 1/2
CF1544-10	616,000	4	850	1 1/2	3	10	13/32	3/4	1 1/2
CF2301	230,400	1	360	1 1/2	3	12	1/4	3/4	1 1/2
CF2301-18	230,400	1	360	1 1/2	3	18	1/4	3/4	1 1/2
CF2302	460,800	2	600	1 1/2	3	12	3/8	3/4	1 1/2
CF2303	691,200	3	820	1 1/2	3	12	1/2	3/4	1 1/2
CF2303-18	691,200	3	820	1 1/2	3	18	1/2	3/4	1 1/2
CF2303-20	691,200	3	820	1 1/2	3	20	1/2	3/4	1 1/2
CF2303-24	691,200	3	820	1 1/2	3	24	1/2	3/4	1 1/2
CF3021	302,400	1	415	1 1/2	3	12	5/16	3/4	1 1/2
CF3021-18	302,400	1	415	1 1/2	3	18	5/16	3/4	1 1/2
CF3021-24	302,400	1	415	1 1/2	3	24	5/16	3/4	1 1/2
CF3021-30	302,400	1	415	1 1/2	3	30	5/16	3/4	1 1/2
CF3022	604,800	2	700	1 1/2	3	12	1/2	3/4	1 1/2
CF3022-14	604,800	2	700	1 1/2	3	14	1/2	3/4	1 1/2
CF3022-19	604,800	2	700	1 1/2	3	19	1/2	3/4	1 1/2
CF3022-20	604,800	2	700	1 1/2	3	20	1/2	3/4	1 1/2
CF3022-24	604,800	2	700	1 1/2	3	24	1/2	3/4	1 1/2
CF3022-30	604,800	2	700	1 1/2	3	30	1/2	3/4	1 1/2
CF3023	907,200	3	960	1 1/2	3	12	11/16	3/4	1 1/2
CF3023-22	907,200	3	960	1 1/2	3	22	11/16	3/4	1 1/2
CF3023-24	907,200	3	960	1 1/2	3	24	11/16	3/4	1 1/2
CF3023-30	907,200	3	960	1 1/2	3	30	11/16	3/4	1 1/2
CF3024-48	1,209,600	4	1200	1 1/2	3	48	15/16	3/4	1 1/2

***Note:** A.C. Ampere ratings in still but confined air for maximum temperature rise 30°C above 40°C ambient with major surfaces of braid in horizontal position.

© 2011, AFL, all rights reserved. PP-3-00277, Revision 0, 2.24.11
Specifications are subject to change without notice.

DOSSERT®

TYPE CFC
Flexible Copper Braid

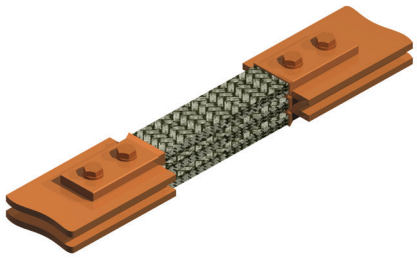

Composite flexible copper braid for linking conductors that are subject to motion. The braid is tin plated copper wire, terminated at each end by a non-plated pad.

Material

Copper

Note

- Braid may be custom made for any configuration of length, pad size or hole diameter.
- For tin plated contact pads add suffix "-SN" to end of catalog number. Ex: CFC1-2-SN
- For undrilled contact pads add suffix "-U" to end of catalog number. Ex: CF771-U

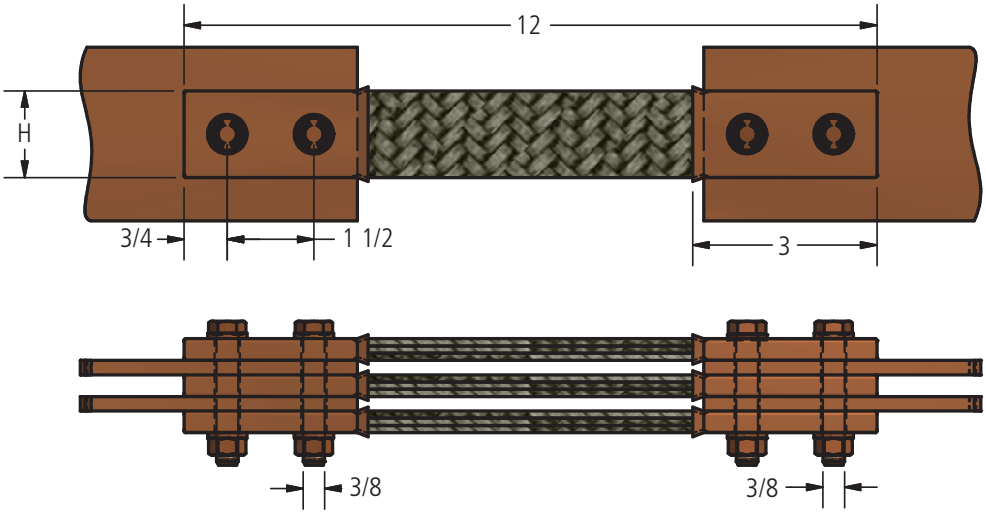

Ordering Information

CATALOG NUMBER	NUMBER OF BARS	DIMENSIONS IN INCHES		INDOOR AMPERE RATING*
		WIDTH OF BARS	H	
CFC1-2	1	2	1 1/2	700
CFC1-3	1	3	1 1/2	1000
CFC1-4	1	4	1 1/2	1350
CFC1-5	1	5	1 1/2	1600
CFC2-2	2	2	2	1200
CFC2-3	2	3	2	1650
CFC2-4	2	4	2 1/2	2250
CFC2-5	2	5	2	2650
CFC3-2	3	2	2 1/2	1650
CFC3-3	3	3	2 1/2	2000
CFC3-4	3	4	2 3/4	2700
CFC3-5	3	5	2 1/2	3200
CFC4-2	4	2	2 1/2	1800
CFC4-3	4	3	2 3/4	2250
CFC4-4	4	4	3 1/2	3000
CFC4-5	4	5	3	3500

***Note:** A.C. Ampere ratings in still but confined air for maximum temperature rise 30ºC above 40ºC ambient with major surfaces of braid in horizontal position.

© 2011, AFL, all rights reserved. PP-3-00278, Revison 0, 2.24.11
Specifications are subject to change without notice.

DOSSERT®

TYPE LX

Copper Flexible Connector For Flat to Flat

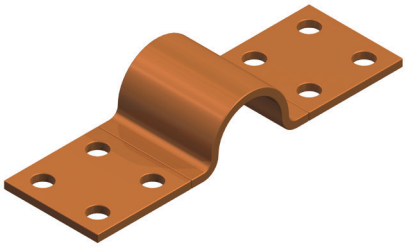

Laminated of pure copper, this flexible connector permits expansion and contraction due to thermal changes. Bonded ends assure uniform contact surfaces. Variations other than shown can be readily supplied.

Material

Copper

Note

- Braid may be custom made for any configuration of length, pad size or hole diameter.
- For tin plated contact pads add suffix "-SN" to end of catalog number. Ex: LX200-SN
- For undrilled contact pads add suffix "-U" to end of catalog number. Ex: LX200-U

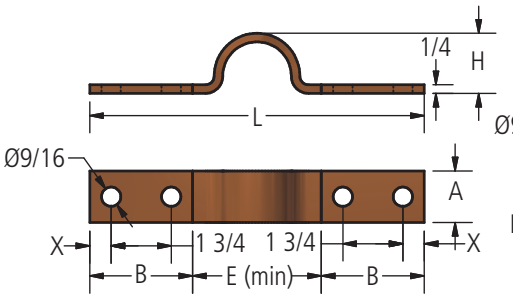

FIG. 1

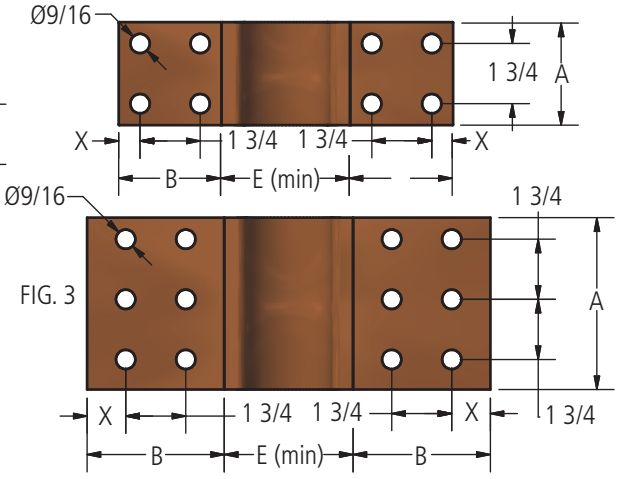

FIG. 2

Ordering Information

CATALOG NUMBER	BAR WIDTH	INDOOR AMPERE RATING*	FIG. NO.	DIMENSIONS IN INCHES					
				A	B	E	H	L	X
LX100	1	366	1	1	3	2 1/4	1	8	5/8
LX150	1 1/2	500	1	1 1/2	3	2 1/2	1 1/2	8 1/2	5/8
LX200	2	647	1	2	3	3 1/2	1 1/2	9 1/2	5/8
LX250	2 1/2	810	1	2 1/2	3	3 3/4	1 3/4	9 3/4	5/8
LX300	3	973	2	3	3	4	1 3/4	10	5/8
LX400	4	1220	2	4	4	4	2	12	1 1/8
LX500	5	1460	3	5	4	4 1/4	2	12 1/4	1 1/8
LX600	6	1660	3	6	4	4 1/4	2 1/4	12 1/4	1 1/8

***Note:** A.C. Ampere ratings in still but confined air for maximum temperature rise 30°C above 40°C ambient with major surfaces of braid in horizontal position.

© 2011, AFL, all rights reserved. PP-3-00384, Revision 0, 2.21.11
Specifications are subject to change without notice.

DOSSERT®

TYPE XC, XCP, XBP

Copper Expansion Coupling

XC, XCP

An expansion connector for coupling two standard pipe size tubular buses.

XBP

An expansion connector for coupling a run to a tap. Pipe size may be same SPS, or varying.

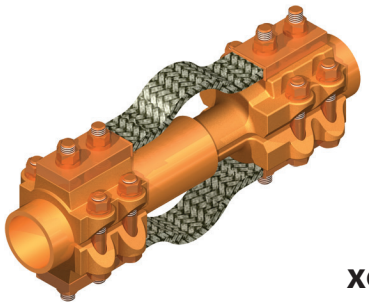

XC

Material

Copper Alloy

Alignment Guide

Copper Alloy

Hardware

Everdur bolts, nuts, lockwashers and flat washers

Notes

- For laminations add "L" to catalog number. Example: XCL100
- For extra heavy pipe size (Schedule 80), add (E) to pipe size. Example: XC100E
- If alignment guide is not required, add (P) to catalog number suffix. Example: XCP100

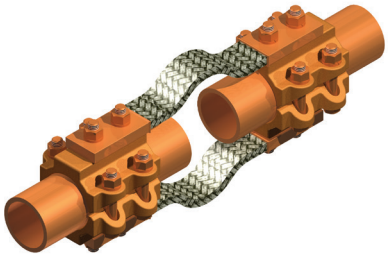

XCP

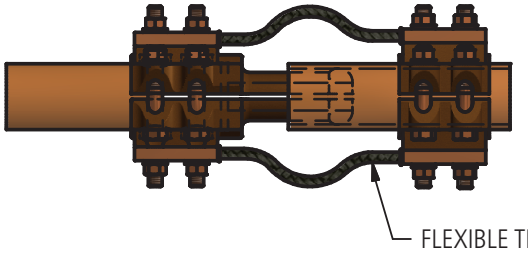

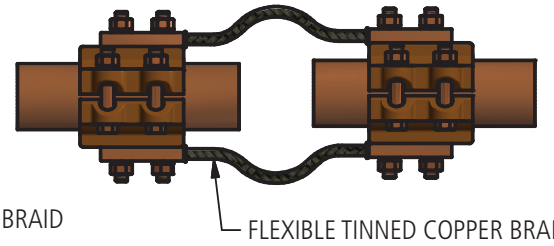

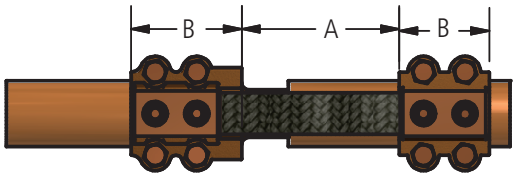

XC

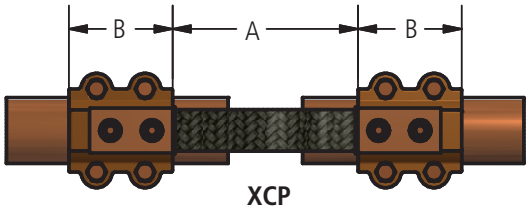

XCP

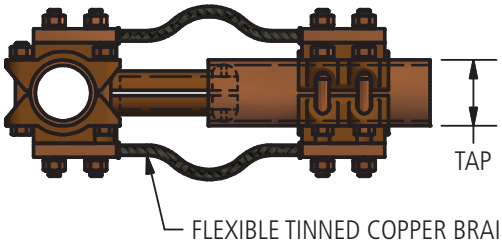

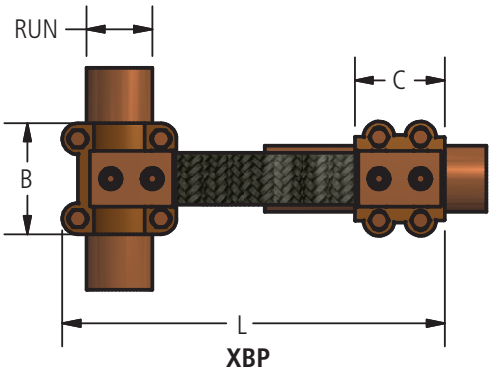

XBP

© 2011, AFL, all rights reserved. PP-3-00591, Revision 2, 8.2.13
Specifications are subject to change without notice.

DOSSERT®

TYPE XC, XCP, XBP

Copper Expansion Coupling

Ordering Information for XC and XCP

XC & XCP							
CATALOG NUMBER							
SCH 40	SCH 80	SPS	A	B	C	L	BOLT SIZE
XC50	XC50E	1/2	5 1/2	2 5/8	-	-	3/8
XC75	XC75E	3/4	5 1/2	3	-	-	3/8
XC100	XC100E	1	5 1/2	3	-	-	3/8
XC125	XC125E	1 1/4	5 1/2	3	-	-	1/2
XC150	XC150E	1 1/2	5 1/2	3 1/4	-	-	1/2
XC200	XC200E	2	6	3 1/4	-	-	1/2
XC250	XC250E	2 1/2	6	3 1/4	-	-	1/2
XC300	XC300E	3	6	3 3/4	-	-	5/8
XC350	XC350E	3 1/2	7	3 3/4	-	-	5/8
XC400	XC400E	4	7	4	-	-	5/8

Ordering Information for XBP

XBP							
CATALOG NUMBER		SPS		DIMENSIONS IN INCHES			BOLT SIZE
SCH 40	SCH 80	RUN	TAP	B	C	L	
XBP150-50	XBP150-50E	1 1/2	1/2	2 5/8	2 5/8	11	3/8
XBP200-50	XBP200-50E	2	1/2	3	2 5/8	11	3/8
XBP200-200	XBP200-200E	2	2	4	3 1/4	13 1/4	1/2
XBP250-125	XBP250-125E	2 1/2	1 1/4	4	3	13 1/4	1/2
XBP250-250	XBP250-250E	2 1/2	2 1/2	4	4	14 1/4	1/2
XBP300-300	XBP300-300E	3	3	4	4	14 5/8	5/8
XBP350-350	XBP350-350E	3 1/2	3 1/2	4	4	15	5/8
XBP400-400	XBP400-400E	4	4	4 3/8	4 3/8	15 3/4	5/8

© 2011, AFL, all rights reserved. PP-3-00591, Revision 2, 8.2.13
Specifications are subject to change without notice.

DOSSERT®

TYPE XL

Terminal Expansion Pipe

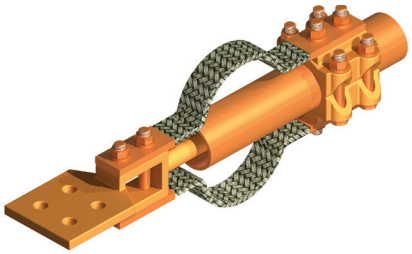

An expansion terminal for connecting a standard pipe size tubular bus to flat conductor surfaces. Designed to permit free axial movement of the bus due to thermal expansion and contraction. High circular mil area of extra flexible linkages ensures cool operation under maximum load conditions. Pad dimensions and drilling other than shown below can be furnished upon request.

Material

Copper Alloy

Hardware

Everdur bolts, nuts, lock washers and washers

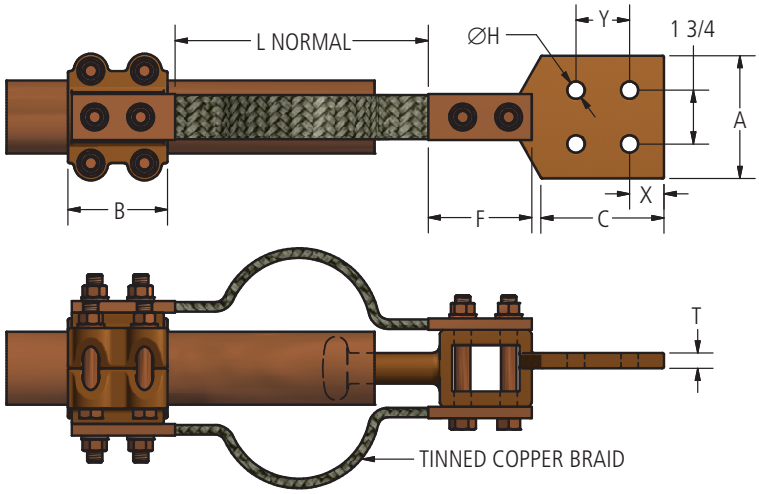

Ordering Information

CATALOG NUMBER	SPS	DIMENSIONS IN INCHES								BOLT SIZE
			B	C	F	H	L	T	X	Y	
XL50-2	1/2	1 1/2	2 5/8	2 1/4	2 5/8	7/16	5	5/16	7/16	1 1/8	3/8
XL50-2N	1/2	1 1/2	2 5/8	3 1/4	2 5/8	9/16	5	5/16	5/8	1 3/4	3/8
XL75-2	3/4	1 1/2	3	2 1/4	3	7/16	6	3/8	1/2	1 1/4	3/8
XL75-2N	3/4	1 1/2	3	3	3	9/16	6	3/8	5/8	1 3/4	3/8
XL100-2	1	1 3/4	3 1/8	2 1/4	3	7/16	6 1/2	3/8	1/2	1 1/4	3/8
XL100-2N	1	1 3/4	3 1/8	3	3	9/16	6 1/2	3/8	5/8	1 3/4	3/8
XL100-4N	1	3	3 1/8	3	3	9/16	6 1/2	3/8	5/8	1 3/4	3/8
XL100-4N4	1	4	3 1/8	4	3	9/16	6 1/2	3/8	1 1/8	1 3/4	3/8
XL125-2N	1 1/4	2 1/2	3 1/4	3	3	9/16	6 1/2	7/16	5/8	1 3/4	1/2
XL125-4N	1 1/4	3	3 1/4	3	3	9/16	6 1/2	7/16	5/8	1 3/4	1/2
XL125-4N4	1 1/4	4	3 1/4	4	3	9/16	6 1/2	7/16	1 1/8	1 3/4	1/2
XL150-2N	1 1/2	2 1/2	3 1/4	3	3	9/16	7	11/16	5/8	1 3/4	1/2
XL150-4N	1 1/2	3	3 1/4	3	3	9/16	7	11/16	5/8	1 3/4	1/2
XL150-4N4	1 1/2	4	3 1/4	4	3	9/16	7	11/16	1 1/8	1 3/4	1/2
XL200-2N	2	2 3/4	3 1/4	3	3	9/16	7	1/2	5/8	1 3/4	1/2
XL200-4N	2	3	3 1/4	3	3	9/16	7	1/2	5/8	1 3/4	1/2
XL200-4N4	2	4	3 1/4	4	3	9/16	7	1/2	1 1/8	1 3/4	1/2
XL250-2N	2 1/2	2 3/4	3 1/4	3	3	9/16	7	11/16	5/8	1 3/4	1/2
XL250-4N	2 1/2	3 3/4	3 1/4	3	3	9/16	7	11/16	5/8	1 3/4	1/2
XL250-4N4	2 1/2	4	3 1/4	4	3	9/16	7	11/16	1 1/8	1 3/4	1/2
XL300-4N	3	4	3 1/4	3	3 1/4	9/16	7	11/16	5/8	1 3/4	5/8
XL300-4N4	3	4	3 1/4	4	3 1/4	9/16	7	11/16	1 1/8	1 3/4	5/8
XL350-4N	3 1/2	4	4 3/8	3	3 1/4	9/16	7	13/16	5/8	1 3/4	5/8
XL350-4N4	3 1/2	4	4 3/8	4	3 1/4	9/16	7	13/16	1 1/8	1 3/4	5/8
XL400-4N	4	4	4 3/8	3	3 1/4	9/16	7	13/16	5/8	1 3/4	5/8
XL400-4N4	4	4	4 3/8	4	3 1/4	9/16	7	13/16	1 1/8	1 3/4	5/8
XL500-4N	5	5	4 7/8	3	4 7/8	9/16	9	7/8	5/8	1 3/4	5/8
XL500-4N4	5	4	4 7/8	4	4 7/8	9/16	9	7/8	1 1/8	1 3/4	5/8
XL600-4N	6	5	5	3	5	9/16	9	7/8	5/8	1 3/4	5/8
XL600-4N4	6	4	5	4	5	9/16	9	7/8	1 1/8	1 3/4	5/8

© 2011, AFL, all rights reserved. PP-3-00593, Revision 2, 1.16.14
Specifications are subject to change without notice.

DOSSERT®

TYPE XTP

Copper Flexible Connector For Tubular Bus To Flat

A clamp type connector with a flexible copper laminated member for joining the tubular clamp to a flat bus, plate or stud. Permits free axial movement of the conductors.

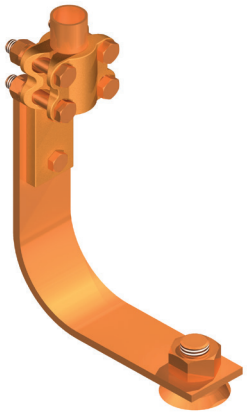

Material

Copper Alloy

Lamination Material

Copper

Hardware

Everdur bolts, nuts, lockwashers, and flat washers

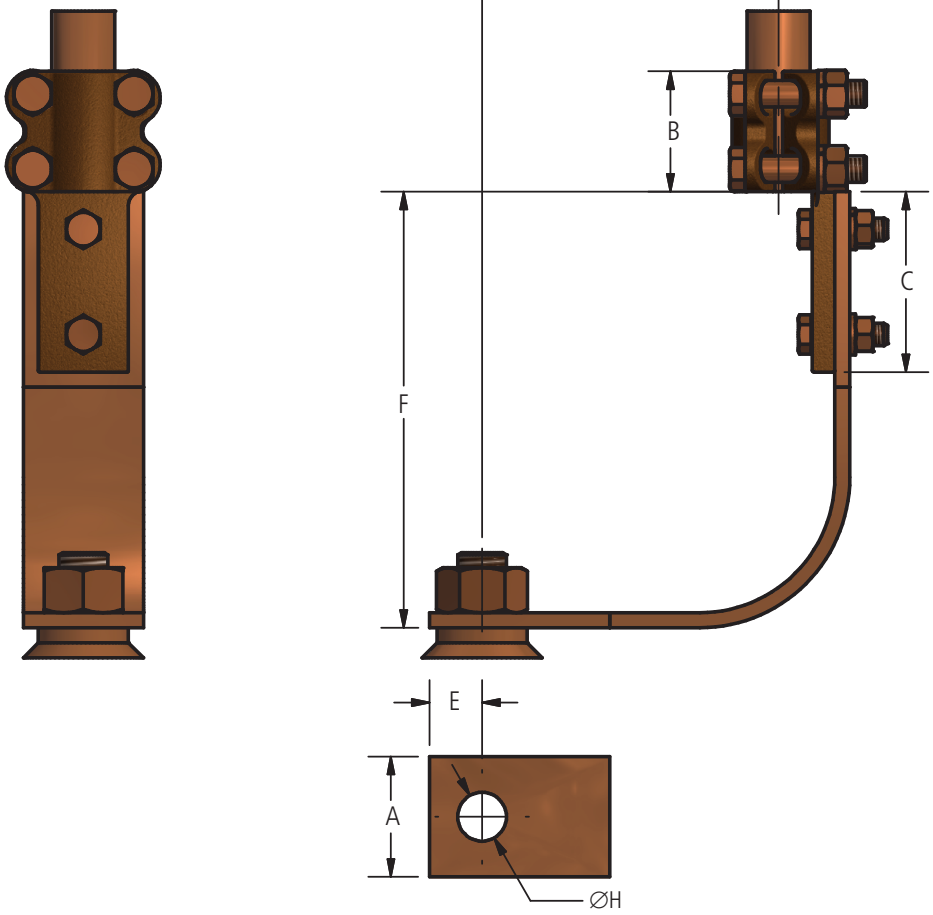

PAD DETAIL
FOR STUD

© 2011, AFL, all rights reserved. PP-3-00596, Revision 1, 8.2.13
Specifications are subject to change without notice.

DOSSERT®

TYPE XTP

Copper Flexible Connector For Tubular Bus To Flat

Ordering Information

CATALOG NUMBER	SPS	STUD DIAMETER	NUMBER OF LAMINATED GROUPS	DIMENSIONS IN INCHES							BOLT SIZE
				A	B	C	E	F	H	S	
XTP25-63	1/3	5/8	1	1 1/4	2	1 7/8	11/16	5 1/2	11/16	4 1/2	3/8
XTP38-63	3/7	5/8	1	1 1/4	2	1 7/8	11/16	5 3/4	11/16	4 3/4	3/8
XTP50-63	1/1	5/8	1	1 1/2	2	2 1/4	11/16	6	11/16	5	3/8
XTP75-63	3/3	5/8	1	1 3/4	2	2 1/4	11/16	6 1/4	11/16	5 1/4	3/8
XTP50-75	1/1	3/4	1	1 1/2	2	2 1/4	7/8	6 1/4	13/16	5 1/4	3/8
XTP75-75	3/3	3/4	1	1 3/4	2	2 1/4	7/8	7	13/16	6	3/8
XTP100-75	1	3/4	1	1 3/4	2 1/8	2 1/4	7/8	8 1/4	13/16	6 3/4	3/8
XTP125-75	1 1/4	3/4	2	2 1/4	2 1/2	3	7/8	8 1/2	13/16	7 1/4	1/2
XTP75-88	3/3	7/8	1	1 3/4	2	2 1/4	1	7	15/16	6	3/8
XTP100-88	1	7/8	1	1 3/4	2 1/8	2 1/4	1	8 1/4	15/16	6 3/4	3/8
XTP125-88	1 1/4	7/8	2	2 1/4	2 1/2	3	1	8 1/2	15/16	7 1/4	1/2
XTP150-88	1 1/2	7/8	2	2 1/4	2 5/8	3 1/4	1	9 1/4	15/16	8	1/2
XTP75-100	3/3	1	1	1 3/4	2	2 1/4	1 1/16	7	1 1/16	6	3/8
XTP100-100	1	1	1	1 3/4	2 1/8	2 1/4	1 1/16	8 1/4	1 1/16	6 3/4	3/8
XTP125-100	1 1/4	1	2	2 1/4	2 1/2	3	1 1/16	8 1/2	1 1/16	7 1/4	1/2
XTP150-100	1 1/2	1	2	2 1/4	2 5/8	3 1/4	1 1/16	9 1/4	1 1/16	8	1/2
XTP75-112	3/3	1 1/8	1	2	2	2 1/4	1 3/16	7	1 3/16	6	3/8
XTP100-112	1	1 1/8	1	2	2 1/8	2 1/4	1 3/16	8 1/4	1 3/16	6 3/4	3/8
XTP125-112	1 1/4	1 1/8	2	2 1/4	2 1/2	3	1 3/16	8 1/2	1 3/16	7 1/4	1/2
XTP150-112	1 1/2	1 1/8	2	2 1/2	2 5/8	3 1/4	1 5/16	9 1/4	1 3/16	8	1/2
XTP100-125	1	1 1/4	1	2 1/4	2 1/8	2 1/4	1 5/16	8 1/4	1 5/16	6 3/4	3/8
XTP125-125	1 1/4	1 1/4	2	2 1/4	2 1/2	3	1 5/16	8 1/2	1 5/16	7 1/4	1/2
XTP150-125	1 1/2	1 1/4	2	2 1/2	2 5/8	3 1/4	1 7/16	9 1/4	1 5/16	8	1/2
XTP200-125	2	1 1/4	2	2 3/4	2 3/4	3 1/4	1 7/16	10	1 5/16	8 3/4	1/2
XTP100-150	1	1 1/2	1	2 1/2	2 1/8	2 1/4	1 7/16	8 1/4	1 9/16	6 3/4	3/8
XTP125-150	1 1/4	1 1/2	2	2 1/2	2 1/2	3	1 7/16	8 1/2	1 9/16	7 1/4	1/2
XTP150-150	1 1/2	1 1/2	2	2 3/4	2 5/8	3 1/4	1 7/16	9 1/4	1 9/16	8	1/2
XTP200-150	2	1 1/2	2	3 1/4	2 3/4	3 1/4	1 9/16	10	1 9/16	8 3/4	1/2

© 2011, AFL, all rights reserved. PP-3-00596, Revision 1, 8.2.13
Specifications are subject to change without notice.

DOSSERT®

TYPE XTS

Copper Flexible Connector For Tubular Bus To Flat

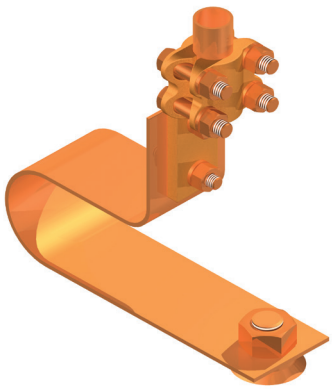

A clamp type connector terminating a tubular bus to a flat bus, plate or stud through a flexible copper strap. The flexible copper strap absorbs operating vibrations and permits free axial movement of the tubular bus.

Material

Copper Alloy

Lamination Material

Copper Alloy

Hardware

Everdur bolts, nuts and lockwashers

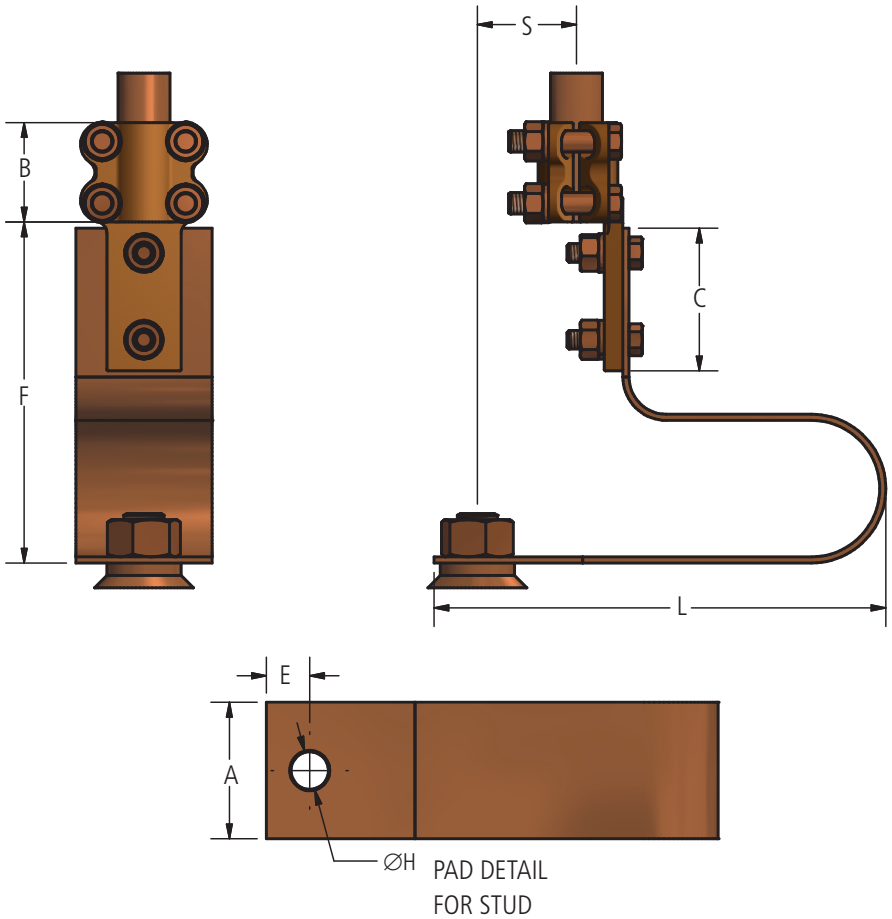

© 2011, AFL, all rights reserved. PP-3-00597, Revision 2, 11.12.13
Specifications are subject to change without notice.

DOSSERT®

TYPE XTS

Copper Flexible Connector For Tubular Bus To Flat

Ordering Information

CATALOG NUMBER	SPS	STUD DIAMETER	NUMBER OF STRAPS	DIMENSIONS IN INCHES								BOLT SIZE
				A	B	C	E	F	H	L	S	
XTS25-63	1/4	5/8	1	1 1/2	2	1 7/8	11/16	6 1/2	11/16	6 5/8	1 3/8	3/8
XTS38-63	3/8	5/8	1	2	2	1 7/8	11/16	6 1/2	11/16	6 3/4	1 3/8	3/8
XTS50-63	1/2	5/8	1	2 1/4	2	2 1/4	11/16	7	11/16	7 3/8	1 1/2	3/8
XTS75-63	3/4	5/8	1	2 3/4	2	2 1/4	11/16	7	11/16	7 5/8	1 3/8	3/8
XTS50-75	1/2	3/4	1	2 1/4	2	2 1/4	7/8	7	13/16	7 5/8	1 1/2	3/8
XTS75-75	3/4	3/4	1	4	2	2 1/4	7/8	7	13/16	8 1/4	1 3/8	3/8
XTS100-75	1	3/4	1	3	2 1/8	2 1/4	7/8	7	13/16	8 3/4	1 1/4	3/8
XTS125-75	1 1/4	3/4	2	2 1/2	2 1/2	3	7/8	7	13/16	9 1/4	1 1/16	1/2
XTS75-88	3/4	7/8	1	2 3/4	2	2 1/4	1	7 3/8	15/16	8 1/4	1 3/8	3/8
XTS100-88	1	7/8	1	3	2 1/8	2 1/4	1	7 3/8	15/16	8 3/4	1 1/4	3/8
XTS125-88	1 1/4	7/8	2	2 1/2	2 1/2	3	1	7 3/8	15/16	9 1/4	1 1/16	1/2
XTS150-88	1 1/2	7/8	2	3	2 5/8	3 1/4	1	7 3/8	15/16	9 3/4	15 /16	1/2
XTS75-100	3/4	1	1	2 3/4	2	2 1/4	1 1/16	7 5/8	1 1/16	8 1/4	1 3/8	3/8
XTS100-100	1	1	1	3	2 1/8	2 1/4	1 1/16	7 5/8	1 1/16	8 3/4	1 1/4	3/8
XTS125-100	1 1/4	1	2	2 1/2	2 1/2	3	1 1/16	7 5/8	1 1/16	9 1/4	1 1/16	1/2
XTS150-100	1 1/2	1	2	3	2 5/8	3 1/4	1 1/16	7 5/8	1 1/16	9 3/4	15 /16	1/2
XTS75-112	3/4	1 1/8	1	2 3/4	2	2 1/4	1 3/16	7 7/8	1 3/16	8 1/4	1 3/8	3/8
XTS100-112	1	1 1/8	1	3	2 1/8	2 1/4	1 3/16	7 7/8	1 3/16	8 3/4	1 1/4	3/8
XTS125-112	1 1/4	1 1/8	2	2 1/2	2 1/2	3	1 3/16	7 7/8	1 3/16	9 1/4	1 1/16	1/2
XTS150-112	1 1/2	1 1/8	2	3	2 5/8	3 1/4	1 5/16	7 7/8	1 3/16	9 3/4	15 /16	1/2
XTS100-125	1	1 1/4	1	3	2 1/8	2 1/4	1 5/16	8 1/8	1 5/16	8 3/4	1 1/4	3/8
XTS125-125	1 1/4	1 1/4	2	2 1/2	2 1/2	3	1 5/16	8 1/8	1 5/16	9 1/4	1 1/16	1/2
XTS150-125	1 1/2	1 1/4	2	3	2 5/8	3 1/4	1 7/16	8 1/8	1 5/16	9 3/4	15/ 16	1/2
XTS200-125	2	1 1/4	2	3 1/2	2 3/4	3 1/4	1 7/16	8 1/8	1 5/16	10 1/4	3/4	1/2
XTS100-150	1	1 1/2	1	3	2 1/8	2 1/4	1 7/16	8 3/8	1 9/16	8 3/4	1 1/4	3/8
XTS125-150	1 1/4	1 1/2	2	2 1/2	2 1/2	3	1 7/16	8 3/8	1 9/16	9 1/4	1 1/16	1/2
XTS150-150	1 1/2	1 1/2	2	3	2 5/8	3 1/4	1 7/16	8 3/8	1 9/16	9 3/4	15/ 16	1/2
XTS200-150	2	1 1/2	2	3 1/2	2 3/4	3 1/4	1 9/16	8 3/8	1 9/16	10 1/4	3/4	1/2

© 2011, AFL, all rights reserved. PP-3-00597, Revision 2, 11.12.13
Specifications are subject to change without notice.

DOSSERT®

TYPE XTSS, XTSS-N

Copper Flexible Connector For Tubular Bus To Flat

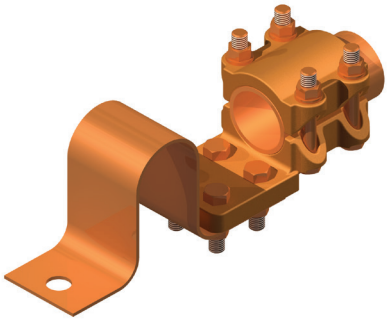

XTSS is used where stud and the tube positioning will not permit any extensive offset. The semi-flexible loop of copper strapping allows for movement caused by the expansion and contraction of conductor members.

Material

Copper Alloy

Hardware

Everdur nuts, bolts and lock washers.

Lamination Material

Copper

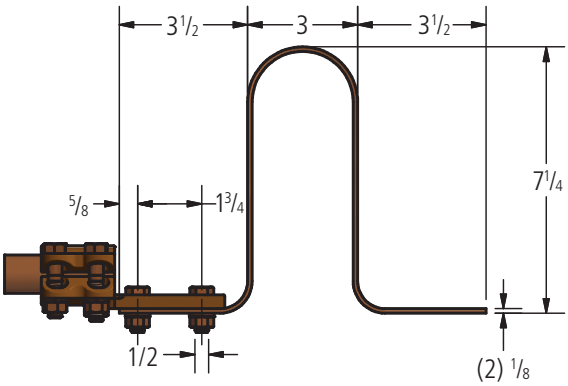

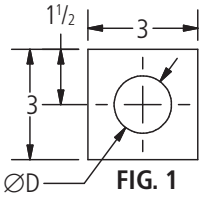

FIG. 1

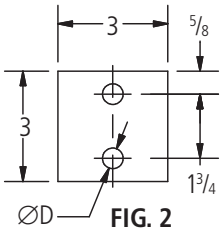

FIG. 2

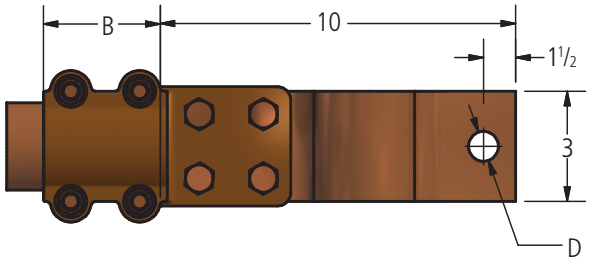

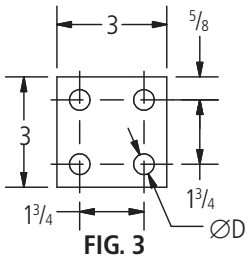

FIG. 3

Ordering Information

CATALOG NUMBER	SPS	FIG. NO.	DIMENSIONS IN INCHES		BOLT SIZE
			B	D	
XTSS100-150	1	1	2	1 9/16	3/8
XTSS100-2N	1	2	2	9/16	3/8
XTSS100-4N	1	3	2	9/16	3/8
XTSS125-150	1 1/4	1	2 5/8	1 9/16	1/2
XTSS125-2N	1 1/4	2	2 5/8	9/16	1/2
XTSS125-4N	1 1/4	3	2 5/8	9/16	1/2
XTSS150-150	1 1/2	1	2 5/8	1 9/16	1/2
XTSS150-175	1 1/2	1	2 5/8	1 13/16	1/2
XTSS150-2N	1 1/2	2	2 5/8	9/16	1/2
XTSS150-4N	1 1/2	3	2 5/8	9/16	1/2
XTSS200-150	2	1	2 3/4	1 9/16	1/2
XTSS200-2N	2	2	2 3/4	9/16	1/2
XTSS200-4N	2	3	2 3/4	9/16	1/2

© 2011, AFL, all rights reserved. PP-3-00598, Revision 1, 8.2.13
Specifications are subject to change without notice.

DOSSERT®

TYPE BCV-S
Tee Connector

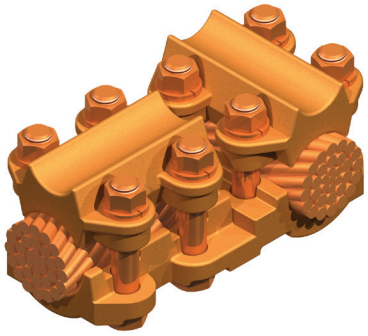

A heavy duty cable run to cable tap tee connector. Handles a wide range of conductor sizes in each clamping position.

Material

Copper Alloy

Hardware

Everdur bolts, nuts and lockwashers

Notes

- For Electro Tin plate, add "-SN" to Catalog Number EX: BCV50-25-S-SN

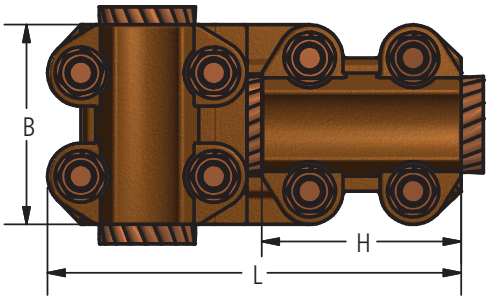

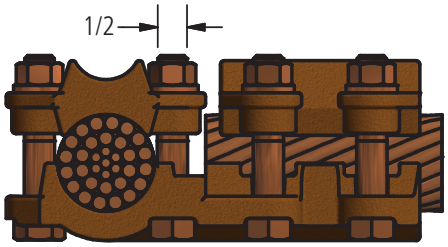

Ordering Information

CATALOG NUMBER	CABLE RANGE RUN				CABLE RANGE TAP				DIMENSIONS IN INCHES		
	SMALL GROOVE		LARGE GROOVE		SMALL GROOVE		LARGE GROOVE				
	MIN	MAX	MIN	MAX	MIN	MAX	MIN	MAX	B	H	L
BCV13-13-S	-	-	6 SOL	2/0 STR	-	-	6 SOL	2/0 STR	2	2	3 3/16
BCV50-25-S	1/0 SOL	250 MCM	250 MCM	500 MCM	-	-	4 SOL	250 MCM	2 5/8	2 3/4	5 9/16
BCV50-50-S	1/0 SOL	250 MCM	250 MCM	500 MCM	1/0 SOL	250 MCM	250 MCM	500 MCM	2 5/8	2 5/8	5 7/16
BCV60-60-S	#4 SOL	3/0 STR	4/0 STR	600 MCM	#4 SOL	3/0 STR	4/0 STR	600 MCM	2 3/4	2 3/4	5 5/8
BCV80-25-S	2/0 SOL	450 MCM	500 MCM	800 MCM	-	-	4 SOL	250 MCM	2 7/8	2 3/4	5 13/16
BCV80-80-S	2/0 STR	450 MCM	500 MCM	800 MCM	2/0 STR	450 MCM	500 MCM	800 MCM	2 7/8	2 7/8	5 15/16
BCV100-25-S	4/0 SOL	400 MCM	450 MCM	1000 MCM	-	-	4 SOL	250 MCM	2 7/8	2 3/4	5 7/8
BCV100-50-S	4/0 SOL	400 MCM	450 MCM	1000 MCM	1/0 SOL	250 MCM	250 MCM	500 MCM	2 7/8	2 5/8	5 3/4
BCV100-100-S	4/0 SOL	400 MCM	450 MCM	1000 MCM	4/0 SOL	400 MCM	450 MCM	1000 MCM	2 7/8	2 7/8	6
BCV100-80-S	4/0 SOL	400 MCM	450 MCM	1000 MCM	2/0 STR	450 MCM	500 MCM	800 MCM	2 7/8	2 7/8	6
BCV150-25-S	250 MCM	750 MCM	800 MCM	1500 MCM	-	-	4 SOL	250 MCM	3 3/8	2 3/4	5 1/2
BCV150-100-S	250 MCM	750 MCM	800 MCM	1500 MCM	4/0 SOL	400 MCM	450 MCM	1000 MCM	3 3/8	2 7/8	6 1/4
BCV150-150-S	250 MCM	750 MCM	800 MCM	1500 MCM	250 MCM	750 MCM	800 MCM	1500 MCM	3 3/8	3 3/8	6 3/4
BCV150-200-S	250 MCM	750 MCM	800 MCM	1500 MCM	500 MCM	1250 MCM	1500 MCM	2000 MCM	3 3/8	3 3/8	6 3/4
BCV200-25-S	500 MCM	1250 MCM	1500 MCM	2000 MCM	-	-	4 SOL	250 MCM	3 3/8	2 3/4	6 3/8
BCV200-50-S	500 MCM	1250 MCM	1500 MCM	2000 MCM	1/0 SOL	250 MCM	250 MCM	500 MCM	3 3/8	2 5/8	6 1/4
BCV200-200-S	500 MCM	1250 MCM	1500 MCM	2000 MCM	500 MCM	1250 MCM	1500 MCM	2000 MCM	3 3/8	3 3/8	7
BCV250-150-S	1000 MCM	1500 MCM	1750 MCM	2500 MCM	250 MCM	750 MCM	800 MCM	1500 MCM	3 3/8	3 3/8	7 1/4

© 2011, AFL, all rights reserved. PP-3-00245, Revision 2, 8.13.18
Specifications are subject to change without notice.

DOSSERT®

TYPE BP, BPA-75, BPA-80

Standard, 75 degree and 80 degree Tee Connector

A two piece all copper tee connector designed for maximum efficiency and reliability.

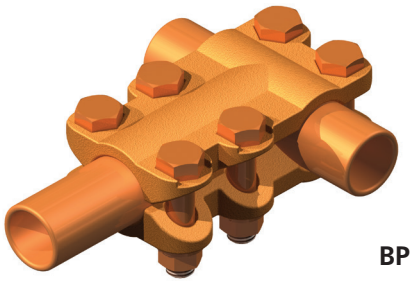

BP

Material

Copper Alloy

Hardware

Everdur bolts, nuts and lockwashers

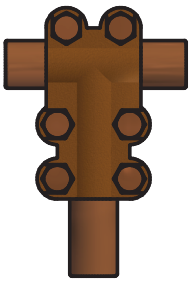

BP

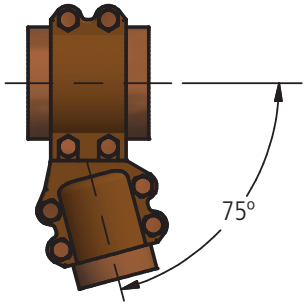

BPA-75

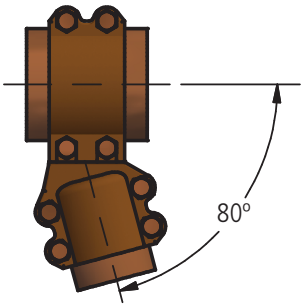

BPA-80

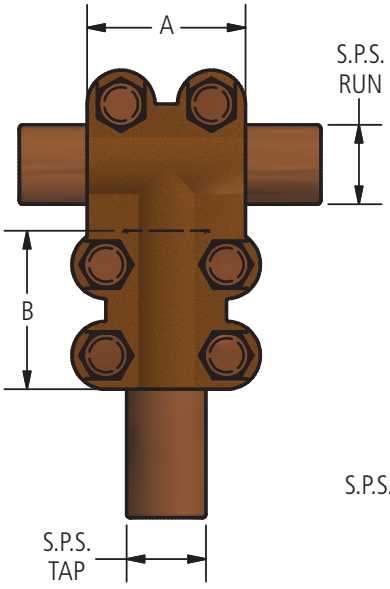

BP

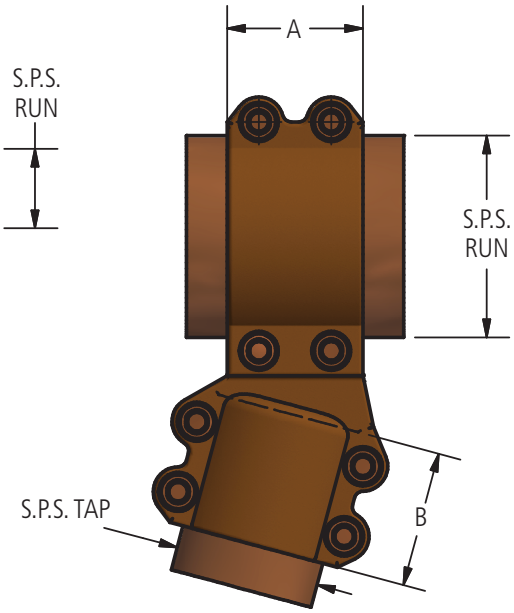

© 2011, AFL, all rights reserved. PP-3-00250, Revision 2, 3.18.14
Specifications are subject to change without notice.

DOSSERT®

TYPE BP, BPA-75, BPA-80

Standard, 75 degree and 80 degree Tee Connector

Ordering Information

CATALOG NUMBER			SPS		DIMENSIONS IN INCHES		BOLT SIZE
STANDARD	75 DEG	80 DEG	RUN	TAP	A	B	
BP100-75	BPA100-75-75	BPA100-75-80	1	3/4	2-3/4	2-3/4	1/2
BP100-100	BPA100-100-75	BPA100-100-80	1	1	2-3/4	2-3/4	1/2
BP125-75	BPA125-75-75	BPA125-75-80	1-1/4	3/4	3	2-3/4	1/2
BP125-100	BPA125-100-75	BPA125-100-80	1-1/4	1	3	2-3/4	1/2
BP125-125	BPA125-125-75	BPA125-125-80	1-1/4	1-1/4	3	3	1/2
BP150-100	BPA150-100-75	BPA150-100-80	1-1/2	1	3	2-3/4	1/2
BP150-125	BPA150-125-75	BPA150-125-80	1-1/2	1-1/4	3	3	1/2
BP150-150	BPA150-150-75	BPA150-150-80	1-1/2	1-1/2	3	3	1/2
BP200-100	BPA200-100-75	BPA200-100-80	2	1	3-1/4	2-3/4	1/2
BP200-125	BPA200-125-75	BPA200-125-80	2	1-1/4	3-1/4	3	1/2
BP200-150	BPA200-150-75	BPA200-150-80	2	1-1/2	3-1/4	3	1/2
BP200-200	BPA200-200-75	BPA200-200-80	2	2	3-1/4	3-1/4	1/2
BP250-100	BPA250-100-75	BPA250-100-80	2-1/2	1	3-1/4	2-3/4	1/2
BP250-125	BPA250-125-75	BPA250-125-80	2-1/2	1-1/4	3-1/4	3	1/2
BP250-150	BPA250-150-75	BPA250-150-80	2-1/2	1-1/2	3-1/4	3	1/2
BP250-200	BPA250-200-75	BPA250-200-80	2-1/2	2	3-1/4	3-1/4	1/2
BP250-250	BPA250-250-75	BPA250-250-80	2-1/2	2-1/2	3-1/4	3-1/4	1/2
BP300-100	BPA300-100-75	BPA300-100-80	3	1	3-1/4	2-3/4	1/2
BP300-125	BPA300-125-75	BPA300-125-80	3	1-1/4	3-1/4	3	1/2
BP300-150	BPA300-150-75	BPA300-150-80	3	1-1/2	3-1/4	3	1/2
BP300-200	BPA300-200-75	BPA300-200-80	3	2	3-1/4	3-1/4	1/2
BP300-250	BPA300-250-75	BPA300-250-80	3	2-1/2	3-1/4	3-1/4	1/2
BP300-300	BPA300-300-75	BPA300-300-80	3	3	3-3/4	3-3/4	5/8
BP350-100	BPA350-100-75	BPA350-100-80	3-1/2	1	3-1/4	2-3/4	1/2
BP350-125	BPA350-125-75	BPA350-125-80	3-1/2	1-1/4	3-1/4	3	1/2
BP350-150	BPA350-150-75	BPA350-15080	3-1/2	1-1/2	3-1/4	3	1/2
BP350-200	BPA350-200-75	BPA350-200-80	3-1/2	2	3-1/4	3-1/4	1/2
BP350-250	BPA350-250-75	BPA350-250-80	3-1/2	2-1/2	3-3/4	3-3/4	5/8
BP350-300	BPA350-300-75	BPA350-300-80	3-1/2	3	3-3/4	3-3/4	5/8
BP350-350	BPA350-350-75	BPA350-350-80	3-1/2	3-1/2	3-3/4	3-3/4	5/8
BP400-125	BPA400-125-75	BPA400-125-80	4	1-1/4	3-1/4	3	1/2
BP400-150	BPA400-150-75	BPA400-150-80	4	1-1/2	3-1/4	3	1/2
BP400-200	BPA400-200-75	BPA400-200-80	4	2	3-1/4	3-1/4	1/2
BP400-250	BPA400-250-75.	BPA400-250-80	4	2-1/2	3-1/4	3-1/4	1/2
BP400-300	BPA400-300-75	BPA400-300-80	4	3	3-3/4	3-3/4	5/8
BP400-350	BPA400-350-75	BPA400-350-80	4	3-1/2	3-3/4	3-3/4	5/8
BP400-400	BPA400-400-75	BPA400-400-80	4	4	3-3/4	3-3/4	5/8
BP500-150	BPA500-150-75	BPA500-150-80	5	1-1/2	3-1/2	3	1/2
BP500-200	BPA500-200-75	BPA500-200-80	5	2	3-1/2	3-1/4	1/2
BP500-250	BPA500-250-75	BPA500-250-80	5	2-1/2	3-1/2	3-1/4	1/2
BP500-300	BPA500-300-75	BPA500-300-80	5	3	4	3-3/4	5/8
BP500-350	BPA500-350-75	BPA500-350-80	5	3-1/2	4	3-3/4	5/8
BP500-400	BPA500-400-75	BPA500-400-80	5	4	4	3-3/4	5/8
BP500-500	BPA500-500-75	BPA500-500-80	5	5	4	4	5/8
BP600-250	BPA600-250-75	BPA600-250-80	6	2-1/2	3-1/2	3-1/2	1/2
BP600-300	BPA600-300-75	BPA600-300-80	6	3	4	3-3/4	5/8
BP600-350	BPA600-350-75	BPA600-350-80	6	3-1/2	4	3-3/4	5/8
BP600-400	BPA600-400-75	BPA600-400-80	6	4	4	3-3/4	5/8
BP600-500	BPA600-500-75	BPA600-500-80	6	5	4	4	5/8
BP600-600	BPA600-600-75	BPA600-600-80	6	6	4	4	5/8

© 2011, AFL, all rights reserved. PP-3-00250, Revision 2, 3.18.14
Specifications are subject to change without notice.

DOSSERT®

TYPE BPCV-S, BP2CV-S

Copper Tee Connector For Tubular Bus To A Cable Tap

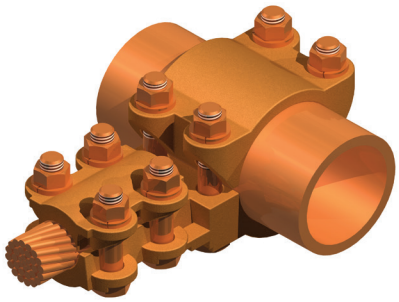

A variable tap pipe to cable tee connector. Cable clamping section is provided with two independently acting high strength bronze saddles.

Material

Copper Alloy

Hardware

Everdur bolts, nuts and lockwashers

Notes

- For tin plating add "-SN" to end of catalog number
- For tee connector 1" SPS pipe run and 300kcmil 2 cable tap, and tin plated order: BP2CV100-30-SN

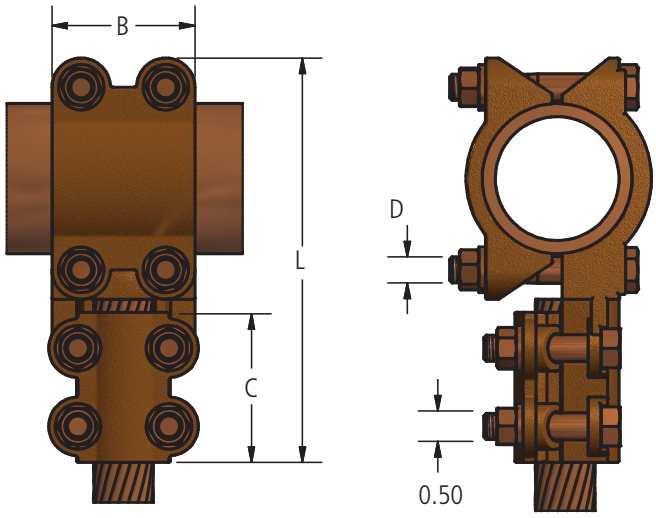

BPCV-S

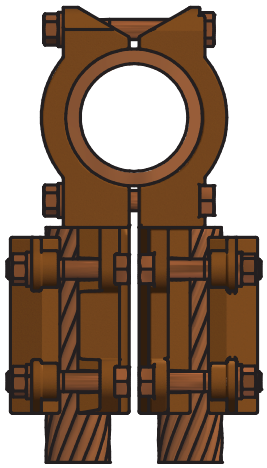

BP2CV-S

© 2011, AFL, all rights reserved. PP-3-00255, Revision 1, 1.25.18
Specifications are subject to change without notice.

DOSSERT®

TYPE BPCV-S, BP2CV-S

Copper Tee Connector For Tubular Bus To A Cable Tap

Ordering Information

CATALOG NUMBER		SPS	CABLE RANGE		DIMENSIONS IN INCHES			
SINGLE CABLE	TWO CABLES		MIN	MAX	B	C	L	D
BPCV50-25-S	BP2CV50-25-S	1/2	#4 SOL	250 MCM	2.50	2.75	5.63	0.50
BPCV50-50-S	BP2CV50-50-S	1/2	1/0 SOL	500 MCM	2.50	2.63	5.69	0.50
BPCV75-25-S	BP2CV75-25-S	3/4	#4 SOL	250 MCM	2.63	2.63	5.69	0.50
BPCV75-50-S	BP2CV75-50-S	3/4	1/0 SOL	500 MCM	2.63	2.75	5.81	0.50
BPCV100-50-S	BP2CV100-50-S	1	1/0 SOL	500 MCM	2.63	2.75	5.94	0.50
BPCV100-80-S	BP2CV100-80-S	1	2/0 SOL	800 MCM	2.63	2.88	6.19	0.50
BPCV100-100-S	BP2CV100-100-S	1	4/0 SOL	1000 MCM	2.63	2.88	6.19	0.50
BPCV100-200-S	BP2CV100-200-S	1	500 MCM	2000 MCM	2.63	3.38	7.00	0.50
BPCV125-50-S	BP2CV125-50-S	1 1/4	1/0 SOL	500 MCM	2.50	2.63	6.31	0.50
BPCV125-80-S	BP2CV125-80-S	1 1/4	2/0 SOL	800 MCM	2.50	2.88	6.56	0.50
BPCV125-100-S	BP2CV125-100-S	1 1/4	4/0 SOL	1000 MCM	2.50	2.88	6.56	0.50
BPCV125-150-S	BP2CV125-150-S	1 1/4	250 MCM	1500 MCM	2.50	3.38	7.25	0.50
BPCV150-50-S	BP2CV150-50-S	1 1/2	1/0 SOL	500 MCM	2.50	2.75	6.63	0.50
BPCV150-80-S	BP2CV150-80-S	1 1/2	2/0 SOL	800 MCM	2.50	2.88	6.75	0.50
BPCV150-100-S	BP2CV150-100-S	1 1/2	4/0 SOL	1000 MCM	2.50	2.88	6.75	0.50
BPCV150-150-S	BP2CV150-150-S	1 1/2	250 MCM	1500 MCM	2.50	3.38	7.25	0.50
BPCV150-200-S	BP2CV150-200-S	1 1/2	500 MCM	2000 MCM	2.50	3.38	7.25	0.50
BPCV200-50-S	BP2CV200-50-S	2	1/0 SOL	500 MCM	2.75	2.75	7.13	0.50
BPCV200-80-S	BP2CV200-80-S	2	2/0 SOL	800 MCM	2.75	2.88	7.25	0.50
BPCV200-100-S	BP2CV200-100-S	2	4/0 SOL	1000 MCM	2.75	2.88	7.25	0.50
BPCV200-150-S	BP2CV200-150-S	2	250 MCM	1500 MCM	2.75	3.38	7.75	0.50
BPCV200-200-S	BP2CV200-200-S	2	500 MCM	2000 MCM	2.75	3.38	7.75	0.50
BPCV250-50-S	BP2CV250-50-S	2 1/2	1/0 SOL	500 MCM	2.75	2.75	7.63	0.50
BPCV250-80-S	BP2CV250-80-S	2 1/2	2/0 SOL	800 MCM	2.75	2.88	7.75	0.50
BPCV250-100-S	BP2CV250-100-S	2 1/2	4/0 SOL	1000 MCM	2.75	2.88	7.75	0.50
BPCV250-150-S	BP2CV250-150-S	2 1/2	250 MCM	1500 MCM	2.75	3.38	8.25	0.50
BPCV250-200-S	BP2CV250-200-S	2 1/2	500 MCM	2000 MCM	2.75	3.38	8.25	0.50
BPCV300-25-S	BP2CV300-25-S	3	#4 SOL	250 MCM	3.00	2.75	8.25	0.50
BPCV300-50-S	BP2CV300-50-S	3	1/0 SOL	500 MCM	3.00	2.75	8.50	0.50
BPCV300-80-S	BP2CV300-80-S	3	2/0 SOL	800 MCM	3.00	2.88	8.63	0.50
BPCV300-100-S	BP2CV300-100-S	3	4/0 SOL	1000 MCM	3.00	2.88	8.63	0.50
BPCV300-150-S	BP2CV300-150-S	3	250 MCM	1500 MCM	3.00	3.38	9.13	0.50
BPCV300-200-S	BP2CV300-200-S	3	500 MCM	2000 MCM	3.00	3.38	9.13	0.50
BPCV350-50-S	BP2CV350-50-S	3 1/2	1/0 SOL	500 MCM	3.50	2.75	9.88	0.69
BPCV350-150-S	BP2CV350-150-S	3 1/2	1/0 SOL	500 MCM	3.50	3.38	9.25	0.69
BPCV400-50-S	BP2CV400-50-S	4	1/0 SOL	500 MCM	3.25	2.63	9.13	0.50
BPCV400-100-S	BP2CV400-100-S	4	4/0 SOL	1000 MCM	3.25	2.88	9.38	0.50
BPCV600-50-S	BP2CV600-50-S	6	1/0 SOL	500 MCM	5.75	2.88	11.63	0.69*

*Part Supplied with (6) bolts for Fastening

© 2011, AFL, all rights reserved. PP-3-00255, Revision 1, 1.25.18
Specifications are subject to change without notice.

DOSSERT®

TYPE BPE

Copper Heavy Duty Tee For Tubular Bus

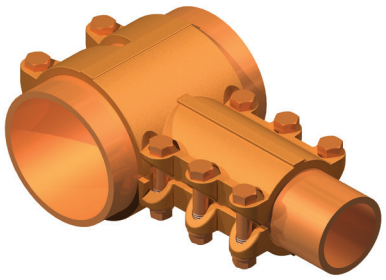

A heavy duty tee connector for standard and extra heavy size of tubular bus. Designed to provide a minimum of four bolts for each conductor. Made of high strength high conductivity copper alloy and designed with a conductive area and contact surface to insure cooler-than-bus operation at maximum load conditions.

Material

Copper Alloy

Hardware

Everdur bolts, nuts and lockwashers

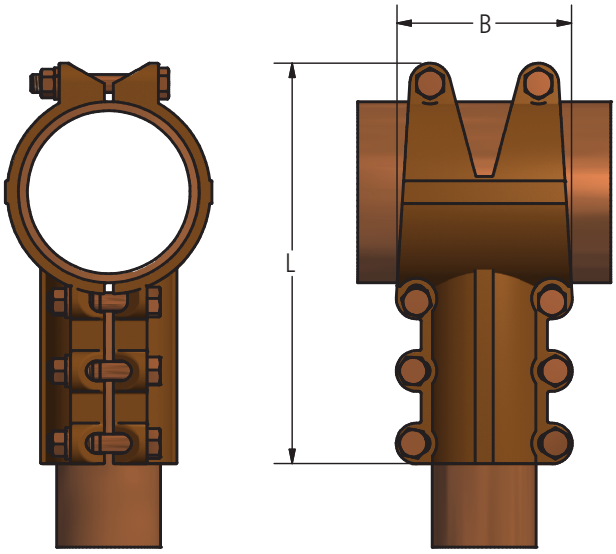

Ordering Information

CATALOG NUMBER	SPS		DIMENSIONS IN INCHES		BOLT SIZE
	RUN	TAP	B	L	
BPE50-50	1/2	1/2	2.50	4.50	3/8
BPE75-50	3/4	1/2	2.50	4.75	3/8
BPE75-75	3/4	3/4	2.69	4.75	3/8
BPE100-50	1	1/2	2.50	5.25	3/8
BPE100-75	1	3/4	2.69	5.38	3/8
BPE100-100	1	1	2.94	5.50	3/8
BPE125-50	1 1/4	1/2	2.50	5.88	3/8
BPE125-75	1 1/4	3/4	2.69	6.00	3/8
BPE125-100	1 1/4	1	2.88	6.25	1/2
BPE125-125	1 1/4	1 1/4	3.81	7.00	1/2
BPE150-50	1 1/2	1/2	2.50	5.94	3/8
BPE150-75	1 1/2	3/4	2.69	6.06	3/8
BPE150-100	1 1/2	1	2.94	6.13	3/8
BPE150-125	1 1/2	1 1/4	3.81	7.25	1/2
BPE150-150	1 1/2	1 1/2	4.00	7.69	1/2
BPE200-50	2	1/2	4.13	6.88	1/2
BPE200-75	2	3/4	2.69	6.38	3/8
BPE200-100	2	1	2.94	6.75	3/8
BPE200-125	2	1 1/4	3.81	7.50	1/2
BPE200-150	2	1 1/2	4.00	8.06	1/2
BPE200-200	2	2	4.50	8.25	1/2

© 2011, AFL, all rights reserved. PP-3-00256, Revision 3, 8.10.18
Specifications are subject to change without notice.

DOSSERT®

TYPE BPE

Copper Heavy Duty Tee For Tubular Bus

Ordering Information

CATALOG NUMBER	SPS		DIMENSIONS IN INCHES		BOLT SIZE
	RUN	TAP	B	L	
BPE250-50	2 1/2	1/2	2.50	7.00	3/8
BPE250-75	2 1/2	3/4	2.69	7.00	3/8
BPE250-100	2 1/2	1	2.94	7.13	3/8
BPE250-125	2 1/2	1 1/4	3.81	8.38	1/2
BPE250-150	2 1/2	1 1/2	4.00	8.56	1/2
BPE250-200	2 1/2	2	4.50	8.75	1/2
BPE250-250	2 1/2	2 1/2	5.00	8.94	1/2
BPE300-50	3	1/2	2.00	8.38	3/8
BPE300-75	3	3/4	2.69	8.38	3/8
BPE300-100	3	1	2.94	8.50	3/8
BPE300-125	3	1 1/4	3.81	9.25	1/2
BPE300-150	3	1 1/2	4.00	9.38	1/2
BPE300-200	3	2	4.50	9.50	1/2
BPE300-250	3	2 1/2	5.00	9.63	1/2
BPE300-300	3	3	6.00	9.75	5/8
BPE300-400	3	4	6.63	10.38	5/8
BPE350-50	3 1/2	1/2	2.50	8.75	3/8
BPE350-75	3 1/2	3/4	2.69	8.75	3/8
BPE350-100	3 1/2	1	2.94	8.88	3/8
BPE350-125	3 1/2	1 1/4	3.81	9.75	1/2
BPE350-150	3 1/2	1 1/2	4.00	9.88	1/2
BPE350-200	3 1/2	2	4.50	10.00	1/2
BPE350-250	3 1/2	2 1/2	5.00	10.13	1/2
BPE350-300	3 1/2	3	6.00	10.75	5/8
BPE350-350	3 1/2	3 1/2	6.50	10.88	5/8
BPE400-50	4	1/2	2.50	9.13	3/8
BPE400-75	4	3/4	2.69	9.13	3/8
BPE400-100	4	1	2.94	9.25	3/8
BPE400-125	4	1 1/4	3.81	10.25	1/2
BPE400-150	4	1 1/2	4.00	10.38	1/2
BPE400-200	4	2	4.50	10.50	1/2
BPE400-250	4	2 1/2	5.00	10.69	1/2
BPE400-300	4	3	6.00	11.19	5/8
BPE400-350	4	3 1/2	6.50	11.31	5/8
BPE400-400	4	4	7.00	11.44	5/8

© 2011, AFL, all rights reserved. PP-3-00256, Revision 3, 8.10.18
Specifications are subject to change without notice.

DOSSERT®

TYPE EP

Clamp Type Elbow For Tubular Bus

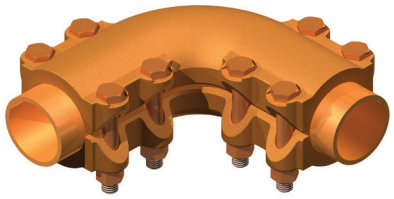

A clamp type elbow for connecting standard pipe size tubular buses at angles to each other. Conductor bearing areas are accurately machine finished with a special surface to provide good electrical contact and high pull-out strength.

Material

Copper Alloy

Hardware

Everdur bolts, nuts and lockwashers

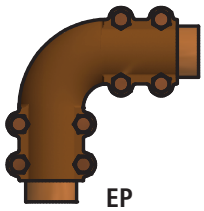

EP
90 DEG

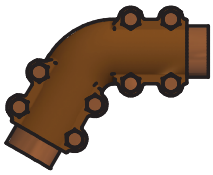

EP-60
60 DEG

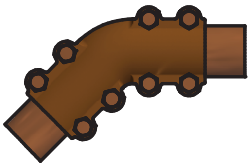

EP-45
45 DEG

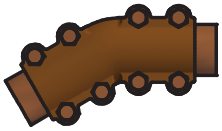

EP-30
30 DEG

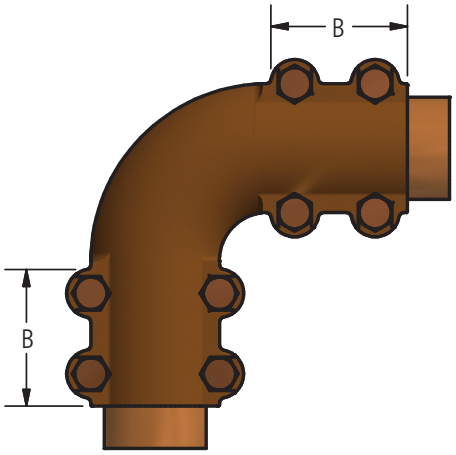

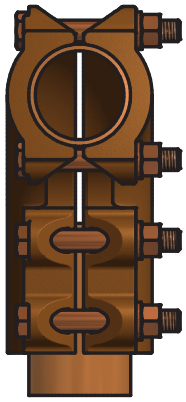

Ordering Information

CATALOG NUMBER				SPS	DIMENSIONS IN INCHES	BOLT SIZE	NUMBER OF BOLTS
90 DEG	60 DEG	45 DEG	30 DEG		B		
EP25	EP25-60	EP25-45	EP25-30	1/4	1 1/4	3/8	4
EP38	EP38-60	EP38-45	EP38-30	3/8	1 1/2	3/8	4
EP50*	EP50-60	EP50-45	EP50-30	1/2	1 1/2	3/8	6
EP75	EP75-60	EP75-45	EP75-30	3/4	1 3/4	3/8	6
EP100	EP100-60	EP100-45	EP100-30	1	2 1/8	3/8	8
EP125	EP125-60	EP125-45	EP125-30	1 1/4	2 1/4	1/2	8
EP150	EP150-60	EP150-45	EP150-30	1 1/2	2 1/2	1/2	8
EP200	EP200-60	EP200-45	EP200-30	2	2 3/4	1/2	8
EP250	EP250-60	EP250-45	EP250-30	2 1/2	3	1/2	8
EP300	EP300-60	EP300-45	EP300-30	3	3 1/2	5/8	8
EP350	EP350-60	EP350-45	EP350-30	3 1/2	3 5/8	5/8	8
EP400	EP400-60	EP400-45	EP400-30	4	3 5/8	5/8	8
EP600	EP600-60	EP600-45	EP600-30	6	6 1/4	5/8	12

* EP50 has 8 bolts and "B" is 2 inches

© 2011, AFL, all rights reserved. PP-3-00327, Revision 1, 5.9.2023
Specifications are subject to change without notice.

DOSSERT®

TYPE PSK, PSKS

Suspension Type Bus Support For Tubular Bus With Ball Eye

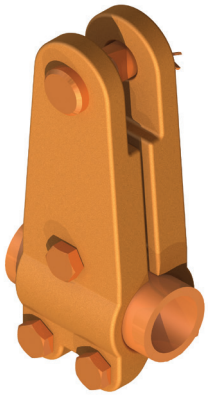

Suspension type bus support clamps for mounting tubular bus to the underside of suspension insulators. Type PSK is provided with a clevis yoke for connecting bus support to an insulator clevis eye while type PSKS is provided with a ball socket for connecting bus support to an insulator ball eye.

Material

Copper Alloy

Hardware

Everdur bolts, nuts and lockwashers

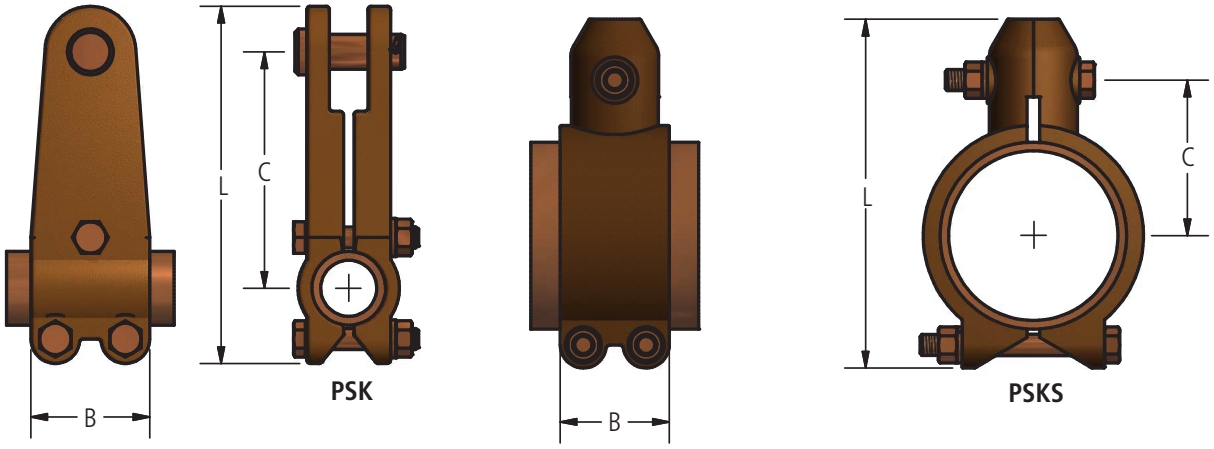

Ordering Information

CATALOG NUMBER		SPS	DIMENSIONS IN INCHES			
PSK SERIES	PSKS SERIES		B	C	L	BOLT SIZE
PSK50	PSKS50	1/2	2 1/8	3	5 3/16	3/8
PSK75	PSKS75	3/4	2 1/8	3 3/16	5 7/16	3/8
PSK100	PSKS100	1	2 1/8	3 7/16	5 13/16	3/8
PSK125	PSKS125	1 1/4	2 1/8	3 1/2	6 1/8	1/2
PSK150	PSKS150	1 1/2	2 5/8	3 13/16	6 5/8	1/2
PSK200	PSKS200	2	2 5/8	4	7 3/8	1/2
PSK250	PSKS250	2 1/2	2 5/8	4 1/4	7 13/16	1/2
PSK300	PSKS300	3	3 5/16	4 5/8	8 15/16	5/8
PSK350	PSKS350	3 1/2	3 5/16	5	9 7/16	5/8
PSK400	PSKS400	4	3 5/16	5 3/8	9 7/8	5/8

© 2011, AFL, all rights reserved. PP-3-00410, Revision 1, 8.2.13
Specifications are subject to change without notice.

DOSSERT®

TYPE PX
Tubular Cross Connector

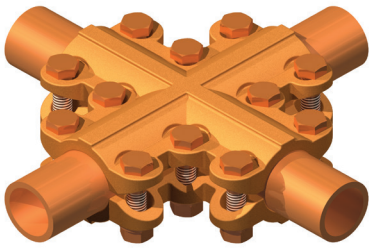

A cross connector for joining two branches to a tubular bus main or for providing a junction for four independent tubular busses. Can be made to accommodate various sizes of conductors.

Material

Copper Alloy

Hardware

Everdur bolts, nuts and lockwashers

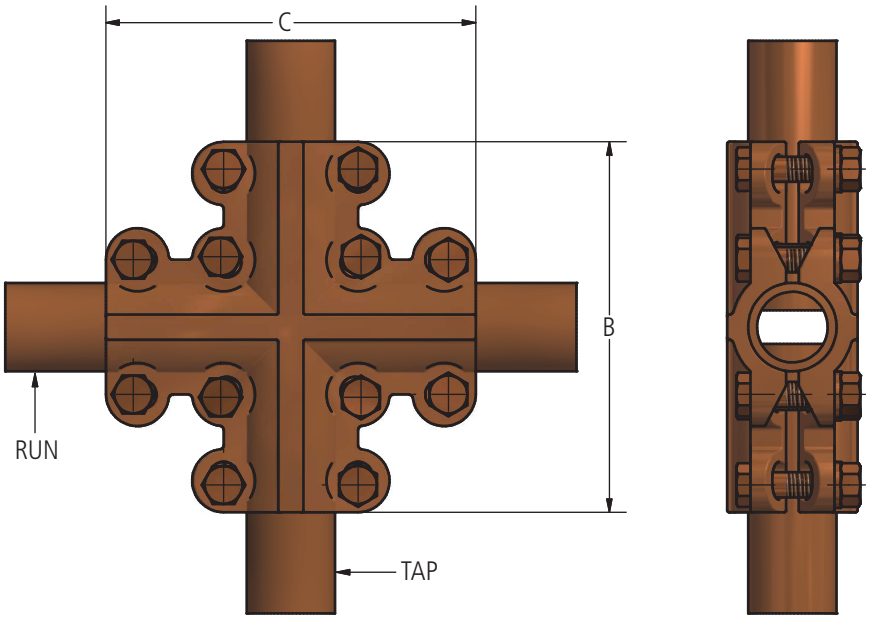

Ordering Information

CATALOG NUMBER	SPS		DIMENSIONS IN INCHES		BOLT SIZE
	RUN	TAP	B	C	
PX50-50	1/2	1/2	4-3/4	4-3/4	3/8
PX75-50	3/4	1/2	4-3/4	4-3/4	3/8
PX75-75	3/4	3/4	4-3/4	4-3/4	3/8
PX100-50	1	1/2	4-3/4	5-7/16	3/8
PX100-75	1	3/4	4-3/4	5-7/16	3/8
PX100-100	1	1	5-7/16	5-7/16	3/8
PX125-75	1-1/4	3/4	4-3/4	6-1/2	3/8
PX125-100	1-1/4	1	6-1/2	6-1/2	1/2
PX125-125	1-1/4	1-1/4	6-11/16	6-11/16	1/2
PX150-150	1-1/2	1-1/2	7-1/8	7-1/8	1/2
PX200-200	2	2	7-13/16	7-13/16	1/2
PX250-250	2-1/2	2-1/2	8-5/16	8-5/16	1/2
PX300-300	3	3	9-7/8	9-7/8	5/8
PX350-350	3-1/2	3-1/2	11-1/8	11-1/8	5/8
PX400-400	4	4	12-1/4	12-1/4	5/8

© 2011, AFL, all rights reserved. PP-3-00420, Revision 0, 2.24.11
Specifications are subject to change without notice.

DOSSERT®

TYPE U2T, UUTT

The U2T is a double tap single run, while the UUTT is a double tap double run.

Each tap position independently takes a wide range of conductor sizes. A well-balanced contact and conductive areas assure cool operation at maximum loads.

Material

Copper Alloy

Hardware

Everdur U-bolts, nuts and lockwashers

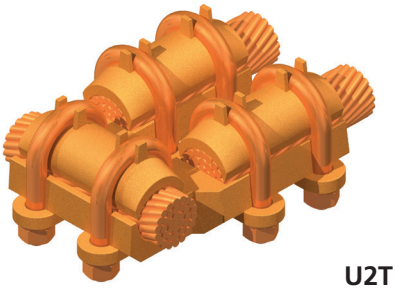

U2T

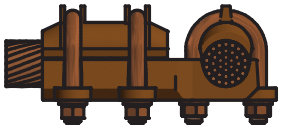

U2T

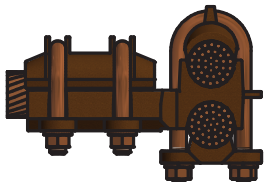

UUTT

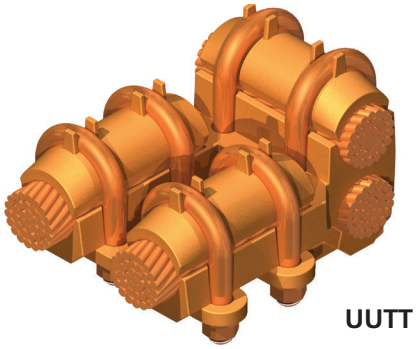

UUTT

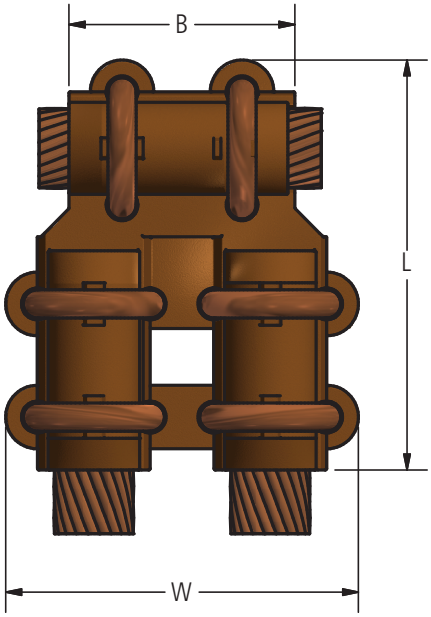

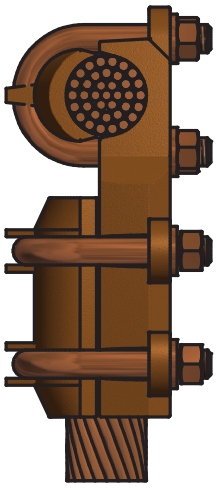

© 2011, AFL, all rights reserved. PP-3-00487, Revision 2, 2.1.2023
Specifications are subject to change without notice.

DOSSERT®

TYPE U2T, UUTT

The U2T is a double tap single run, while the UUTT is a double tap double run.

Ordering Information

CATALOG NUMBER		CABLE RANGE RUN		CABLE RANGE TAP		DIMENSIONS IN INCHES			U-BOLT DIA.	
		MIN	MAX	MIN	MAX	B	L	W	MAIN	TAP
U2T13-13	UUTT13-13	# 6 STRanded	2/0 STRanded	#6 STRanded	2/0 STRanded	3 1/4	4 1/4	3 1/4	5/16	5/16
U2T21-21	UUTT21-21	#1 STRanded	4/0 STRanded	#1 STRanded	4/0 STRanded	3 1/4	4 1/2	3 3/4	3/8	3/8
U2T30-13	UUTT30-13	1/0 STRanded	300 MCM	#6 STRanded	2/0 STRanded	3 1/4	4 1/4	3 1/4	3/8	3/8
U2T30-30	UUTT30-30	1/0 STRanded	300 MCM	1/0 STRanded	300 MCM	3 3/4	4 1/2	4	3/8	3/8
U2T50-13	UUTT50-13	300 MCM	500 MCM	#6 STRanded	2/0 STRanded	3 1/4	4 3/8	3 1/4	3/8	5/16
U2T50-21	UUTT50-21	300 MCM	500 MCM	#1 STRanded	4/0 STRanded	3 1/4	4 3/4	3 3/4	3/8	3/8
U2T50-30	UUTT50-30	300 MCM	500 MCM	1/0 STRanded	300 MCM	4 1/4	4 7/8	4	3/8	3/8
U2T50-50	UUTT50-50	300 MCM	500 MCM	300 MCM	500 MCM	4 1/4	5 1/8	4 3/8	3/8	3/8
U2T80-13	UUTT80-13	500 MCM	800 MCM	#6 STRanded	2/0 STRanded	3 1/4	5 1/4	3 1/4	1/2	5/16
U2T80-21	UUTT80-21	500 MCM	800 MCM	#1 STRanded	4/0 STRanded	3 1/4	5 7/8	3 3/4	1/2	3/8
U2T80-30	UUTT80-30	500 MCM	800 MCM	1/0 STRanded	300 MCM	4 1/4	6	4	1/2	3/8
U2T80-50	UUTT80-50	500 MCM	800 MCM	300 MCM	500 MCM	4 1/4	6 1/4	4 3/8	1/2	3/8
U2T80-80	UUTT80-80	500 MCM	800 MCM	500 MCM	800 MCM	5 1/4	6 1/2	5 1/2	1/2	1/2
U2T100-13	UUTT100-13	750 MCM	1000 MCM	#6 STRanded	2/0 STRanded	4 1/4	5 1/2	3 1/4	1/2	5/16
U2T100-21	UUTT100-21	750 MCM	1000 MCM	#1 STRanded	4/0 STRanded	4 1/4	5 5/8	3 3/4	1/2	3/8
U2T100-30	UUTT100-30	750 MCM	1000 MCM	1/0 STRanded	300 MCM	4 1/4	5 3/4	4	1/2	3/8
U2T100-50	UUTT100-50	750 MCM	1000 MCM	300 MCM	500 MCM	4 1/4	6	4 3/8	1/2	3/8
U2T100-80	UUTT100-80	750 MCM	1000 MCM	500 MCM	800 MCM	5 1/4	6 1/4	5 1/2	1/2	1/2
U2T100-100	UUTT100-100	750 MCM	1000 MCM	750 MCM	1000 MCM	5 1/4	6 1/2	5 7/8	1/2	1/2
U2T150-13	UUTT150-13	1000 MCM	1500 MCM	#6 STRanded	2/0 STRanded	4 1/4	5 3/4	3 1/4	1/2	5/16
U2T150-21	UUTT150-21	1000 MCM	1500 MCM	#1 STRanded	4/0 STRanded	4 1/4	5 7/8	3 3/4	1/2	3/8
U2T150-30	UUTT150-30	1000 MCM	1500 MCM	1/0 STRanded	300 MCM	4 1/4	6	4	1/2	3/8
U2T150-50	UUTT150-50	1000 MCM	1500 MCM	300 MCM	500 MCM	4 1/4	6 1/4	4 3/8	1/2	3/8
U2T150-80	UUTT150-80	1000 MCM	1500 MCM	500 MCM	800 MCM	5 1/4	6 1/2	5 1/2	1/2	1/2
U2T150-100	UUTT150-100	1000 MCM	1500 MCM	750 MCM	1000 MCM	5 1/4	6 3/4	5 7/8	1/2	1/2
U2T150-150	UUTT150-150	1000 MCM	2000 MCM	1000 MCM	2000 MCM	4	7 1/4	6 1/4	1/2	1/2
U2T200-30	UUTT200-30	1500 MCM	2000 MCM	1/0 STRanded	300 MCM	4 1/4	6 1/4	4	1/2	3/8
U2T200-50	UUTT200-50	1500 MCM	2000 MCM	300 MCM	500 MCM	4 1/4	6 1/2	4 3/8	1/2	3/8
U2T200-80	UUTT200-80	1500 MCM	2000 MCM	500 MCM	800 MCM	4 1/2	6 11/16	5 1/2	1/2	1/2
U2T200-100	UUTT200-100	1500 MCM	2000 MCM	750 MCM	1000 MCM	5 1/4	7	5 7/8	1/2	1/2
U2T200-150	UUTT200-150	1500 MCM	2000 MCM	1000 MCM	1500 MCM	6 3/8	7 1/2	6 5/8	1/2	1/2
U2T200-200	UUTT200-200	1500 MCM	2000 MCM	1500 MCM	2000 MCM	4 1/2	8 1/2	6 7/8	1/2	1/2

© 2011, AFL, all rights reserved. PP-3-00487, Revision 2, 2.1.2023
Specifications are subject to change without notice.

DOSSERT®

TYPE UP2T

Copper Tee For Tubular Bus To Double Cable Tap

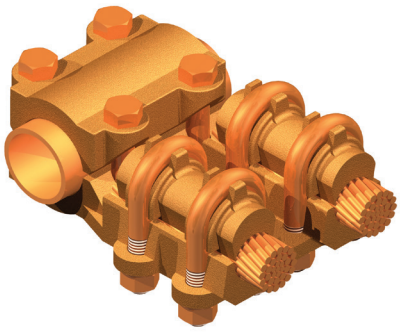

A double tap tee connector for a standard pipe size run to two cable taps.Each cable position independently takes a wide range of conductors.

Material

Copper Alloy

Hardware

Everdur bolts, nuts, lockwashers, and U-bolts

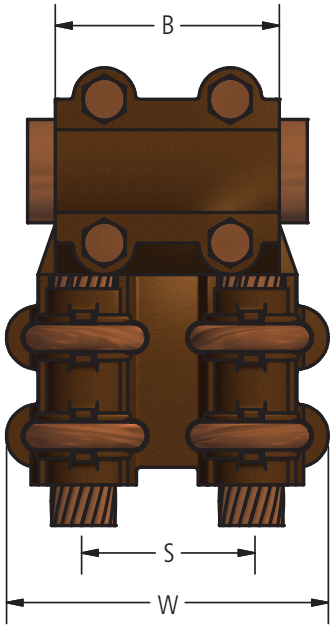

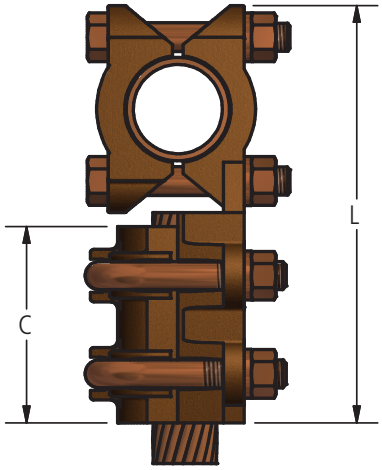

© 2011, AFL, all rights reserved. PP-3-00508, Revision 0, 2.24.11
Specifications are subject to change without notice.

DOSSERT®

TYPE UP2T

Copper Tee For Tubular Bus To Double Cable Tap

Ordering Information

CATALOG NUMBER	SPS	CABLE RANGE		DIMENSIONS IN INCHES					BOLT SIZE	
		MIN	MAX	B	C	L	S	W	RUN	TAP
UP2T38-13	3/8	6 STR	2/0 STR	2	2 1/2	4 13/16	1 11/16	3 1/4	3/8	5/16
UP2T50-13	1/2	6 STR	2/0 STR	2	2 1/2	5	1 11/16	3 1/4	3/8	5/16
UP2T50-21	1/2	1 STR	4/0 STR	2	2 5/8	5 1/8	1 31/32	3 3/4	3/8	3/8
UP2T50-30	1/2	1/0 STR	300 MCM	2	2 3/4	5 1/4	2 1/16	4	3/8	3/8
UP2T75-13	3/4	6 STR	2/0 STR	2	2 1/2	5 3/16	1 11/16	3 1/4	3/8	5/16
UP2T75-21	3/4	1 STR	4/0 STR	2	2 5/8	5 5/16	1 31/32	3 3/4	3/8	3/8
UP2T75-30	3/4	1/0 STR	300 MCM	2	2 3/4	5 7/16	2 1/16	4	3/8	3/8
UP2T75-50	3/4	300 MCM	500 MCM	2	3	5 11/16	2 1/4	4 3/8	3/8	3/8
UP2T100-13	1	6 STR	2/0 STR	2 1/4	2 1/2	5 1/2	1 11/16	3 1/4	3/8	5/16
UP2T100-21	1	1 STR	4/0 STR	2 1/4	2 5/8	5 5/8	1 31/32	3 3/4	3/8	3/8
UP2T100-30	1	1/0 STR	300 MCM	2 1/4	2 3/4	5 3/4	2 1/16	4	3/8	3/8
UP2T100-50	1	300 MCM	500 MCM	2 1/4	3	6	2 1/4	4 3/8	3/8	3/8
UP2T100-80	1	500 MCM	800 MCM	2 3/4	3 1/4	6 3/4	2 27/32	5 1/2	1/2	1/2
UP2T125-13	1 1/4	6 STR	2/0 STR	2 1/4	2 1/2	5 3/4	1 11/16	3 1/4	3/8	5/16
UP2T125-21	1 1/4	1 STR	4/0 STR	2 1/4	2 5/8	5 7/8	1 31/32	3 1/4	3/8	3/8
UP2T125-30	1 1/4	1/0 STR	300 MCM	2 1/4	2 3/4	6	2 1/16	4	3/8	3/8
UP2T125-50	1 1/4	300 MCM	500 MCM	2 1/4	3	6 1/4	2 1/4	4 3/8	3/8	3/8
UP2T125-80	1 1/4	500 MCM	800 MCM	2 3/4	3 1/4	6 7/8	2 27/32	5 1/2	1/2	1/2
UP2T125-100	1 1/4	750 MCM	1000 MCM	2 3/4	3 1/2	7 3/10	3	5 7/8	1/2	1/2
UP2T150-21	1 1/2	1 STR	4/0 STR	2 1/4	2 5/8	6 3/16	1 31/32	3 3/4	3/8	3/8
UP2T150-30	1 1/2	1/0 STR	300 MCM	2 1/4	2 3/4	6 5/16	2 1/16	4	3/8	3/8
UP2T150-50	1 1/2	300 MCM	500 MCM	2 1/4	3	6 9/16	2 1/4	4 3/8	3/8	3/8
UP2T150-80	1 1/2	500 MCM	800 MCM	2 3/4	3 1/4	7 3/16	2 27/32	5 1/2	1/2	1/2
UP2T150-100	1 1/2	750 MCM	1000 MCM	2 3/4	3 1/2	7 7/16	3	5 7/8	1/2	1/2
UP2T200-21	2	1 STR	4/0 STR	2 1/4	2 5/8	6 5/8	1 31/32	3 3/4	3/8	3/8
UP2T200-30	2	1/0 STR	300 MCM	2 1/4	2 3/4	6 3/4	2 1/16	4	3/8	3/8
UP2T200-50	2	300 MCM	500 MCM	2 3/4	3	7	2 1/4	4 3/8	3/8	3/8
UP2T200-80	2	500 MCM	800 MCM	3 1/4	3 1/4	7 5/8	2 27/32	5 5/8	1/2	1/2
UP2T200-100	2	750 MCM	1000 MCM	3 1/4	3 1/2	8 1/8	3	5 1/2	1/2	1/2
UP2T200-150	2	1000 MCM	1500 MCM	3 3/4	4	8 5/8	3 1/4	6 5/8	1/2	1/2
UP2T250-30	2 1/2	1/0 STR	300 MCM	2 1/4	2 3/4	7 1/4	2 1/16	4	3/8	3/8
UP2T250-50	2 1/2	300 MCM	500 MCM	2 3/4	3	7 1/2	2 1/4	4 3/8	3/8	3/8
UP2T250-80	2 1/2	500 MCM	800 MCM	3 1/4	3 1/4	8 1/8	2 27/32	5 1/2	1/2	1/2
UP2T250-100	2 1/2	750 MCM	1000 MCM	3 1/4	3 1/2	8 3/8	3	5 7/8	1/2	1/2
UP2T250-150	2 1/2	1000 MCM	]500 MCM	4	4	9	3 1/4	6 5/8	1/2	1/2
UP2T300-30	3	1/0 STR	300 MCM	2 1/4	2 3/4	7 7/8	2 1/16	4	3/8	3/8
UP2T300-50	3	30 C MCM	500 MCM	2 3/4	3	8 1/8	2 1/4	4 3/8	3/8	3/8
UP2T300-80	3	500 MCM	800 MCM	3 1/4	3 1/4	8 3/4	2 27/32	5 1/2	1/2	1/2
UP2T300-100	3	750 MCM	1000 MCM	3 1/4	3 1/2	9	3	5 7/8	1/2	1/2
UP2T300-150	3	1000 MCM	1500 MCM	4	4	9 1/2	3 1/4	6 5/8	1/2	1/2
UP2T350-30	3 1/2	1/0 STR	300 MCM	2 1/4	2 3/4	8 3/8	2 1/16	4	3/8	3/8
UP2T350-50	3 1/2	300 MCM	500 MCM	2 3/4	3	8 5/8	2 1/4	4	3/8	3/8
UP2T350-80	3 1/2	500 MCM	800 MCM	3 1/4	3 1/4	9 1/4	2 27/32	5 1/2	1/2	1/2
UP2T350-100	3 1/2	750 MCM	1000 MCM	3 1/4	3 1/2	9 1/2	3	5 7/8	1/2	1/2
UP2T350-150	3 1/2	1000 MCM	1500 MCM	4	4	10	3 1/4	6 5/8	1/2	1/2
UP2T400-30	4	1/0 STR	300 MCM	2 1/4	2 3/4	8 7/8	2 1/16	4	3/8	3/8
UP2T400-50	4	300 MCM	500 MCM	2 3/4	3	9 1/8	2 1/4	4 3/8	3/8	3/8
UP2T400-80	4	500 MCM	800 MCM	3 1/4	3 1/4	9 3/4	2 27/32	5 1/2	1/2	1/2
UP2T400-100	4	750 MCM	1000 MCM	3 1/4	3 1/2	10	3	5 7/8	1/2	1/2
UP2T400-150	4	1000 MCM	1500 MCM	4	4	10 1/2	3 1/4	6 5/8	1/2	1/2

© 2011, AFL, all rights reserved. PP-3-00508, Revision 0, 2.24.11
Specifications are subject to change without notice.

DOSSERT®

TYPE UPT

Copper Pipe To Cable Tee Connector

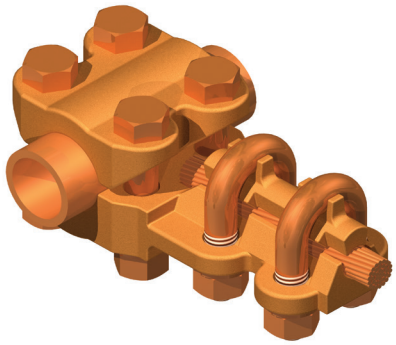

A pipe to cable tee connector. The U-bolt variable clamping feature on the tap permits a number of cable sizes for one size of pipe. All bolts, nuts, lockwashers are of Everdur material.

Material

Cast High Conductivity Copper Alloy

Hardware

Everdur bolts, nuts, lockwashers, and U-bolts

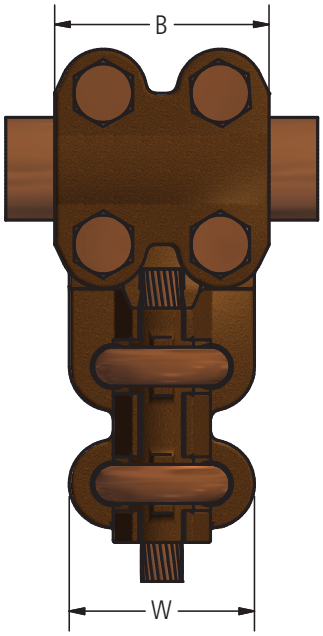

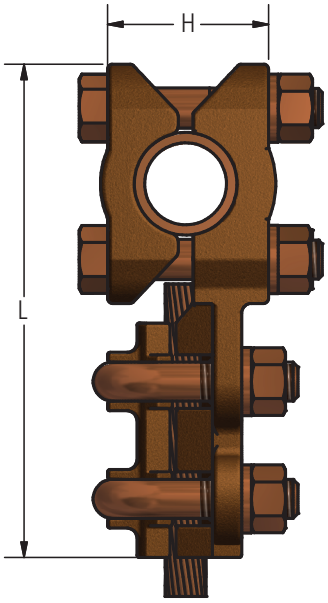

© 2011, AFL, all rights reserved. PP-3-00511, Revision 1, 4.29.15
Specifications are subject to change without notice.

DOSSERT®

TYPE UPT

Copper Pipe To Cable Tee Connector

Ordering Information

CATALOG NUMBER	SPS	CABLE RANGE		DIMENSIONS IN INCHES				U-BOLT DIAMETER	
		MIN	MAX	B	H MAX	L	W	SPS	CABLE
UPT50-13	1/2	6 STR	2/0 STR	2	1 3/4	5 1/8	1 5/8	3/8	3/8
UPT50-21	1/2	1 STR	4/0 STR	2	1 3/4	5 1/4	1 15/16	3/8	3/8
UPT50-30	1/2	1/0 STR	300 MCM	2	1 3/4	5 3/8	2	3/8	3/8
UPT75-13	3/4	6 STR	2/0 STR	2	2	5 1/8	1 5/8	3/8	3/8
UPT75-21	3/4	1 STR	4/0 STR	2	2	5 1/4	1 15/16	3/8	3/8
UPT75-30	3/4	1/0 STR	300 MCM	2	2	5 3/8	2	3/8	3/8
UPT75-50	3/4	300 MCM	500 MCM	2	2	5 1/2	2 1/8	3/8	3/8
UPT100-13	1	6 STR	2/0 STR	2	2	5 5/8	1 5/8	3/8	3/8
UPT100-21	1	1 STR	4/0 STR	2	2 1/8	5 3/4	1 15/16	3/8	3/8
UPT100-30	1	1/0 STR	300 MCM	2	2 1/8	5 7/8	2	3/8	3/8
UPT100-50	1	300 MCM	500 MCM	2	2 1/8	6	2 1/8	3/8	3/8
UPT100-80	1	500 MCM	800 MCM	2	2 1/8	6 1/8	2 3/8	3/8	1/2
UPT125-13	1 1/4	6 STR	2/0 STR	2	2 3/8	5 7/8	1 5/8	3/8	3/8
UPT125-21	1 1/4	1 STR	4/0 STR	2	2 3/8	6	1 15/16	3/8	3/8
UPT125-30	1 1/4	1/0 STR	300 MCM	2	2 3/8	6 1/8	2	3/8	3/8
UPT125-50	1 1/4	300 MCM	500 MCM	2	2 3/8	6 1/4	2 1/8	3/8	3/8
UPT125-80	1 1/4	500 MCM	800 MCM	2	2 3/8	6 3/8	2 3/8	3/8	1/2
UPT125-100	1 1/4	750 MCM	1000 MCM	2 3/4	2 1/2	7 1/4	2 7/8	1/2	1/2
UPT150-21	1 1/2	1 STR	4/0 STR	2	2 3/8	6 1/8	1 15/16	3/8	3/8
UPT150-30	1 1/2	1/0 STR	300 MCM	2	2 1/2	6 1/4	2	3/8	3/8
UPT150-50	1 1/2	300 MCM	500 MCM	2	2 1/2	6 3/8	2 1/8	3/8	3/8
UPT150-80	1 1/2	500 MCM	800 MCM	2	2 1/2	6 1/2	2 3/8	3/8	1/2
UPT150-100	1 1/2	750 MCM	1000 MCM	2 3/4	2 3/4	7 3/8	2 7/8	1/2	1/2
UPT200-21	2	1 STR	4/0 STR	2	2 7/8	6 13/16	1 15/16	3/8	3/8
UPT200-30	2	1/0 STR	300 MCM	2	2 7/8	6 15/16	2	3/8	3/8
UPT200-50	2	300 MCM	500 MCM	2	3	7 1/16	2 1/8	3/8	3/8
UPT200-80	2	500 MCM	800 MCM	2	3	7 3/16	2 3/8	3/8	1/2
UPT200-100	2	750 MCM	1000 MCM	2 3/4	3	8 1/16	2 7/8	1/2	1/2
UPT200-150	2	1000 MCM	1500 MCM	2 3/4	3 1/8	8 9/16	3 1/4	1/2	1/2
UPT250-21	2 1/2	1 STR	4/0 STR	2	3 7/16	7 1/8	1 15/16	3/8	3/8
UPT250-30	2 1/2	1/0 STR	300 MCM	2	3 1/2	7 1/4	2	3/8	3/8
UPT250-50	2 1/2	300 MCM	500 MCM	2	3 1/2	7 3/8	2 1/8	3/8	3/8
UPT250-80	2 1/2	500 MCM	800 MCM	2	3 1/2	7 1/2	2 3/8	3/8	1/2
UPT250-100	2 1/2	750 MCM	1000 MCM	2 3/4	3 5/8	8 1/2	2 7/8	1/2	1/2
UPT250-150	2 1/2	1000 MCM	1500 MCM	2 3/4	3 5/8	9	3 1/4	1/2	1/2
UPT300-21	3	1 STR	4/0 STR	2	4 1/8	7 3/4	1 15/16	3/8	3/8
UPT300-30	3	1/0 STR	300 MCM	2	4 1/8	7 7/8	2	3/8	3/8
UPT300-50	3	300 MCM	500 MCM	2	4 3/16	8	2 1/8	3/8	3/8
UPT300-80	3	500 MCM	800 MCM	2	4 3/16	8 1/8	2 3/8	3/8	3/8
UPT300-100	3	750 MCM	1000 MCM	2 3/4	4 1/4	8 7/8	2 7/8	1/2	1/2
UPT300-150	3	1000 MCM	1500 MCM	2 3/4	4 1/4	9 3/8	3 1/4	1/2	1/2
UPT400-21	4	1 STR	4/0 STR	2	5 1/8	8 3/4	1 15/16	3/8	3/8
UPT400-30	4	1/0 STR	300 MCM	2	5 1/8	8 7/8	2	3/8	3/8
UPT400-50	4	300 MCM	500 MCM	2	5 1/4	9	2 1/8	3/8	3/8
UPT400-80	4	500 MCM	800 MCM	2	5 1/4	9 1/8	2 3/8	3/8	3/8
UPT400-100	4	750 MCM	1000 MCM	2 3/4	5 3/8	10 1/8	2 7/8	1/2	1/2
UPT400-150	4	1000 MCM	1500 MCM	2 3/4	5 3/8	10 5/8	3 1/4	1/2	1/2
UPT400-200	4	1500 MCM	2000 MCM	2 3/4	5 3/8	11 1/8	3 1/2	1/2	1/2

© 2011, AFL, all rights reserved. PP-3-00511, Revision 1, 4.29.15
Specifications are subject to change without notice.

DOSSERT®

TYPE UT, UUT
U-Bolt Tee Connector

A rugged U-bolt high compression clamp type tee connector which takes a wide range of cable sizes in both the run and tap sections. Designed to withstand high compressive clamping action on all cables within specified cable ranges.

Material

Copper Alloy

Hardware

Everdur U-bolts, nuts, and lockwashers

Notes

- For a 500 MCM cable tee connector, single tap, SINGLE run, order UT50-50.
- For a 500 MCM cable tee connector, single tap, DOUBLE run, order UUT50-50.
- For tin plating, add "-SN" to end of catalog number. EX: UT50-50-SN

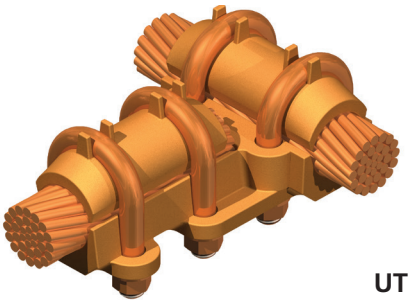

UT

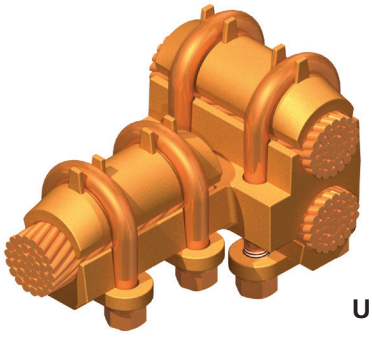

UUT

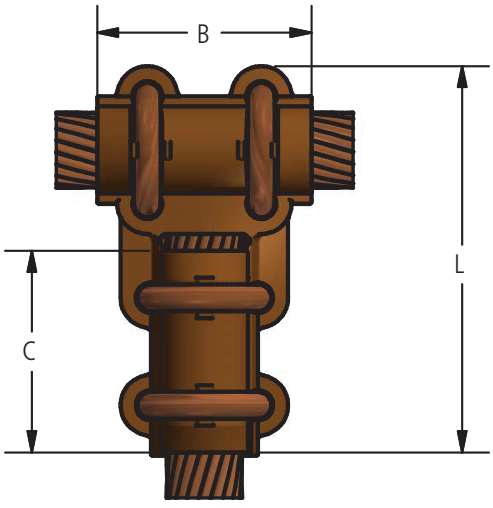

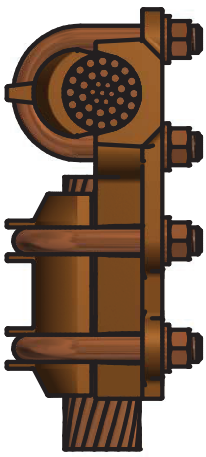

UT

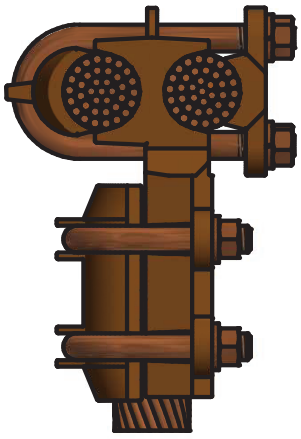

UUT

© 2011, AFL, all rights reserved. PP-3-00514, Revision 3, 12.9.2022
Specifications are subject to change without notice.

DOSSERT®

TYPE UT, UUT
U-Bolt Tee Connector

Ordering Information

CATALOG NUMBER		CABLE RANGE				DIMENSIONS IN INCHES				
		RUN		TAP		B	C	L	U-BOLT DIA.	
SINGLE RUN	DOUBLE RUN	MIN	MAX	MIN	MAX				RUN	TAP
UT13-13	UUT13-13	#6 Stranded	2/0 Stranded	#6 Stranded	2/0 Stranded	2 1/2	2 1/2	4 1/4	3/8	5/16
UT21-21	UUT21-21	#1 Stranded	4/0 Stranded	#1 Stranded	4/0 Stranded	2 5/8	2 5/8	4 1/2	3/8	3/8
UT30-13	UUT30-13	1/0 Stranded	300 MCM	#6 Stranded	2/0 Stranded	2 3/4	2 3/4	4 1/4	3/8	5/16
UT30-30	UUT30-30	1/0 Stranded	300 MCM	1/0 Stranded	300 MCM	2 3/4	2 3/4	4 1/2	3/8	3/8
UT50-13	UUT50-13	300 MCM	500 MCM	#6 Stranded	2/0 Stranded	3	2 1/2	4 3/8	1/2	5/16
UT50-21	UUT50-21	300 MCM	500 MCM	#1 Stranded	4/0 Stranded	3	2 5/8	4 3/4	1/2	3/8
UT50-30	UUT50-30	300 MCM	500 MCM	1/0 Stranded	300 MCM	3	2 3/4	4 7/8	1/2	3/8
UT50-50	UUT50-50	300 MCM	500 MCM	300 MCM	500 MCM	3	3	5 1/8	3/8	3/8
UT80-13	UUT80-13	500 MCM	800 MCM	#6 Stranded	2/0 Stranded	3 1/4	2 1/2	5 1/4	1/2	5/16
UT80-21	UUT80-21	500 MCM	800 MCM	#1 Stranded	4/0 Stranded	3 1/4	2 5/8	5 7/8	1/2	3/8
UT80-30	UUT80-30	500 MCM	800 MCM	1/0 Stranded	300 MCM	3 1/4	2 3/4	6	1/2	3/8
UT80-50	UUT80-50	500 MCM	800 MCM	300 MCM	500 MCM	3 1/4	3	5 13/16	1/2	3/8
UT80-80	UUT80-80	500 MCM	800 MCM	500 MCM	800 MCM	3 1/4	3 1/4	6 1/2	1/2	1/2
UT100-13	UUT100-13	750 MCM	1000 MCM	#6 Stranded	2/0 Stranded	3 1/2	2 1/2	5 1/2	1/2	5/16
UT100-21	UUT100-21	750 MCM	1000 MCM	#1 Stranded	4/0 Stranded	3 1/2	2 5/8	5 5/8	1/2	3/8
UT100-30	UUT100-30	750 MCM	1000 MCM	1/0 Stranded	300 MCM	3 1/2	2 3/4	5 3/4	1/2	3/8
UT100-50	UUT100-50	750 MCM	1000 MCM	300 MCM	500 MCM	3 1/2	3	6	1/2	3/8
UT100-80	UUT100-80	750 MCM	1000 MCM	500 MCM	800 MCM	3 1/2	3 1/4	6 1/4	1/2	1/2
UT100-100	UUT100-100	750 MCM	1000 MCM	750 MCM	1000 MCM	3 1/2	3 1/2	6 9/16	1/2	1/2
UT150-13	UUT150-13	1000 MCM	2000 MCM	#6 Stranded	2/0 Stranded	4	2 1/2	5 3/4	1/2	5/16
UT150-21	UUT150-21	1000 MCM	2000 MCM	#1 Stranded	4/0 Stranded	4	2 5/8	5 7/8	1/2	3/8
UT150-30	UUT150-30	1000 MCM	2000 MCM	1/0 Stranded	300 MCM	4	2 3/4	6	1/2	3/8
UT150-50	UUT150-50	1000 MCM	2000 MCM	300 MCM	500 MCM	4	3	6 1/4	1/2	3/8
UT150-80	UUT150-80	1000 MCM	2000 MCM	500 MCM	800 MCM	4	3 1/4	6 1/2	1/2	1/2
UT150-100	UUT150-100	1000 MCM	2000 MCM	750 MCM	1000 MCM	4	3 1/2	6 3/4	1/2	1/2
UT150-150	UUT150-150	1000 MCM	2000 MCM	1000 MCM	2000 MCM	4	3 7/8	7 1/4	1/2	1/2
UT200-30	UUT200-30	1500 MCM	2000 MCM	1/0 Stranded	300 MCM	4 1/2	2 3/4	6 1/2	1/2	3/8
UT200-50	UUT200-50	1500 MCM	2000 MCM	300 MCM	500 MCM	4 1/2	3	6 3/4	1/2	3/8
UT200-80	UUT200-80	1500 MCM	2000 MCM	500 MCM	800 MCM	4 1/2	3 1/4	7	5/8	1/2
UT200-100	UUT200-100	1500 MCM	2000 MCM	750 MCM	1000 MCM	4 1/2	3 1/2	7 1/4	5/8	1/2
UT200-150	UUT200-150	1500 MCM	2000 MCM	1000 MCM	1500 MCM	4 1/2	4	7 3/4	5/8	1/2
UT200-200	UUT200-200	1500 MCM	2000 MCM	1500 MCM	2000 MCM	4 1/2	4 1/2	8 3/16	1/2	1/2

© 2011, AFL, all rights reserved. PP-3-00514, Revision 3, 12.9.2022
Specifications are subject to change without notice.

DOSSERT®

TYPE UTS

Copper U-Bolt Type Tee Coupler

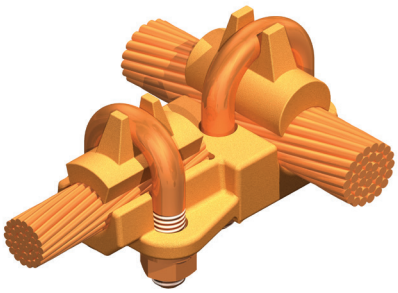

A rugged U-bolt clamp type tee connector which takes a wide range of cable sizes in both the run and tap sections. Designed to withstand high compressive clamping action on all cables within specified cable range. UTS is a compact version of UT.

Material

Copper Alloy

Hardware

Everdur nuts, lockwashers and U-bolts

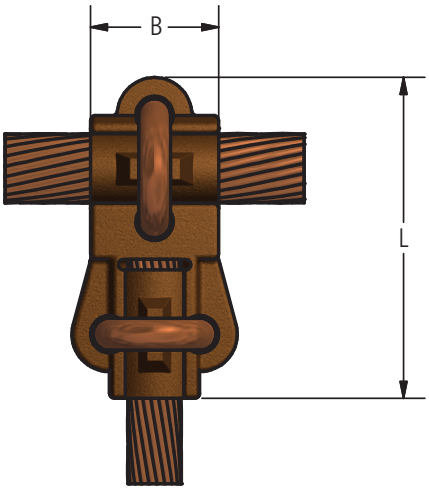

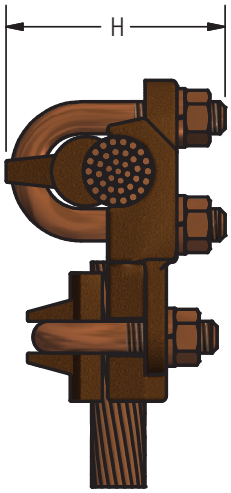

Ordering Information

CATALOG NUMBER	CABLE RANGE				DIMENSIONS IN INCHES			U-BOLT SIZE	
	RUN		TAP		B	H	L	MAIN	TAP
	MIN	MAX	MIN	MAX					
UTS13-13	6 STR	2/0 STR	6 STR	2/0 STR	1 1/4	1 3/4	3 1/8	5/16	5/16
UTS21-13	1 STR	4/0 STR	6 STR	2/0 STR	1 5/16	2 1/8	3 3/8	3/8	5/16
UTS21-21	1 STR	4/0 STR	1 STR	4/0 STR	1 5/16	2 1/8	3 7/16	3/8	3/8
UTS30-21	1/0 STR	300 MCM	1 STR	4/0 STR	1 3/8	2 3/8	3 1/2	3/8	3/8
UTS30-30	1/0 STR	300 MCM	1/0 STR	300 MCM	1 3/8	2 3/8	3 5/8	3/8	3/8
UTS50-13	300 MCM	500 MCM	6 STR	2/0 STR	1 1/2	2 5/8	3 11/16	3/8	5/16
UTS50-30	300 MCM	500 MCM	1/0 STR	300 MCM	1 1/2	2 5/8	3 13/16	3/8	3/8
UTS50-50	300 MCM	500 MCM	300 MCM	500 MCM	1 1/2	2 5/8	3 15/16	3/8	3/8
UTS80-13	500 MCM	800 MCM	1 STR	2/0 STR	1 3/4	2 3/4	4 1/8	1/2	5/16
UTS80-30	500 MCM	800 MCM	1/0 STR	300 MCM	1 3/4	2 3/4	4 1/4	1/2	3/8
UTS80-50	500 MCM	800 MCM	300 MCM	500 MCM	1 3/4	3 1/8	4 3/8	1/2	3/8
UTS80-80	500 MCM	800 MCM	500 MCM	800 MCM	1 3/4	3 1/8	4 1/2	1/2	1/2
UTS100-13	750 MCM	1000 MCM	1 STR	2/0 STR	2	3	4 1/4	1/2	5/16
UTS100-21	750 MCM	1000 MCM	1 STR	4/0 STR	2	3	4 3/8	1/2	3/8
UTS100-30	750 MCM	1000 MCM	1/0 STR	300 MCM	2	3	4 3/8	1/2	3/8
UTS100-50	750 MCM	1000 MCM	300 MCM	500 MCM	2	3	4 1/2	1/2	3/8
UTS100-80	750 MCM	1000 MCM	500 MCM	800 MCM	2 1/4	3	4 3/4	1/2	1/2
UTS100-100	750 MCM	1000 MCM	750 MCM	1000 MCM	2 1/4	3	4 1/2	1/2	1/2
UTS150-30	1000 MCM	1500 MCM	1/0 STR	300 MCM	2 1/4	3 3/4	4 3/4	1/2	3/8
UTS150-50	1000 MCM	1500 MCM	300 MCM	500 MCM	2 1/4	3 3/4	4 7/8	1/2	3/8
UTS150-80	1000 MCM	1500 MCM	500 MCM	800 MCM	2 5/8	3 3/4	5 1/8	1/2	1/2
UTS150-100	1000 MCM	1500 MCM	750 MCM	1000 MCM	2 7/8	3 3/4	5 1/4	1/2	1/2
UTS150-150	1000 MCM	1500 MCM	1000 MCM	1500 MCM	3 1/4	3 3/4	5 1/2	1/2	1/2
UTS200-30	1500 MCM	2000 MCM	1/0 STR	300 MCM	2	3 13/16	5	1/2	3/8
UTS200-50	1500 MCM	2000 MCM	300 MCM	500 MCM	2	3 13/16	5 1/8	1/2	3/8
UTS200-100	1500 MCM	2000 MCM	750 MCM	1000 MCM	2	3 13/16	5 1/4	1/2	1/2
UTS200-150	1500 MCM	2000 MCM	1000 MCM	1500 MCM	2	3 13/16	5 1/2	1/2	1/2
UTS200-200	1500 MCM	2000 MCM	1500 MCM	2000 MCM	2	3 13/16	5 5/8	1/2	1/2

© 2011, AFL, all rights reserved. PP-3-00515, Revision 1, 8.3.2022
Specifications are subject to change without notice.

DOSSERT®

TYPE VB

V Brace For Strut To Tubular Bus

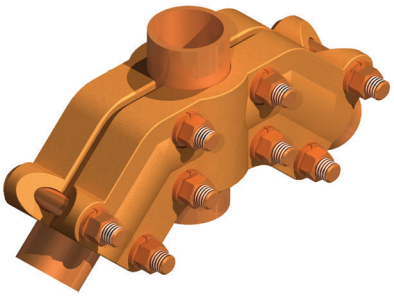

A V-Brace for connecting angular Struts and trusses to tubular buses for Structural support. Eliminates use of Structural steel supports and the required accompanying insulators. With the V-Brace and Angle Brace, various arrangements of trussing may be devised.

Material

Copper Alloy

Hardware

Everdur bolts, nuts and lockwashers

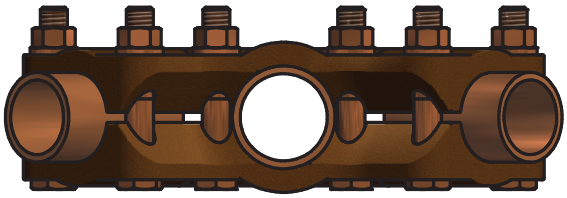

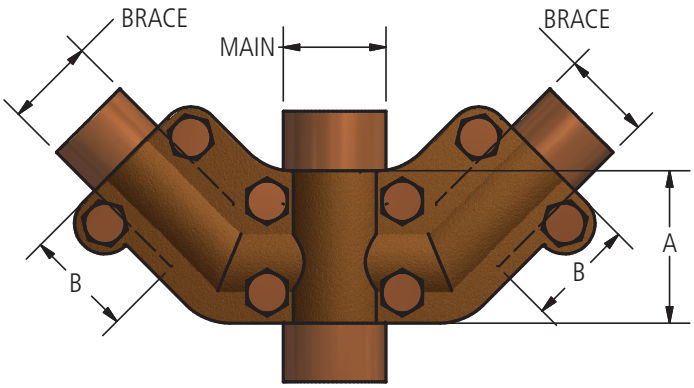

Ordering Information

CATALOG NUMBER	SPS		DIMENSIONS IN INCHES		BOLT SIZE
	MAIN	BRACE	A	B	
VB75-50	3/4	1/2	1 3/4	1 1/2	3/8
VB75-75	3/4	3/4	1 3/4	1 3/4	3/8
VB100-50	1	1/2	1 3/4	1 1/2	3/8
VB100-75	1	3/4	1 3/4	1 3/4	3/8
VB125-75	1 1/4	3/4	1 7/8	1 3/4	3/8
VB125-100	1 1/4	1	1 7/8	1 3/4	3/8
VB150-75	1 1/2	3/4	1 7/8	1 3/4	3/8
VB150-100	1 1/2	1	1 7/8	1 3/4	3/8
VB150-125	1 1/2	1 1/4	2 1/4	2 1/4	1/2
VB200-100	2	1	1 7/8	1 3/4	3/8
VB200-125	2	1 1/4	2 1/4	2 1/4	1/2
VB200-150	2	1 1/2	2 1/2	2 1/2	1/2
VB250-125	2 1/2	1 1/4	2 1/4	2 1/4	1/2
VB250-150	2 1/2	1 1/2	2 1/2	2 1/2	1/2
VB250-200	2 1/2	2	2 3/4	2 3/4	1/2
VB300-125	3	1 1/4	2 1/4	2 1/4	1/2
VB300-150	3	1 1/2	2 1/2	2 1/2	1/2
VB300-200	3	2	2 3/4	2 3/4	1/2
VB350-125	3 1/2	1 1/4	2 3/4	2 1/4	1/2
VB350-150	3 1/2	1 1/2	2 3/4	2 1/2	1/2
VB350-200	3 1/2	2	2 3/4	2 3/4	1/2
VB400-125	4	1 1/4	2 3/4	2 1/4	1/2
VB400-150	4	1 1/2	2 3/4	2 1/2	1/2
VB400-200	4	2	2 3/4	2 3/4	1/2

© 2011, AFL, all rights reserved. PP-3-00516, Revision 0, 2.24.11
Specifications are subject to change without notice.

DOSSERT®

TYPE VBPS
Double Tee Connector V-Type

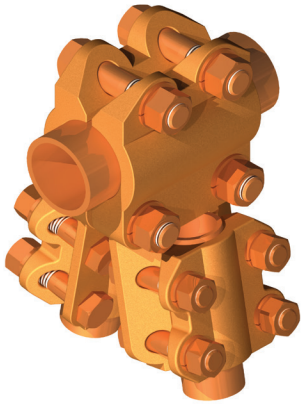

A V-type tee connector which can serve a two-fold purpose in acting as a structural member as well as a connector.

Material
Copper Alloy

Hardware
Everdur bolts, nuts and lockwashers

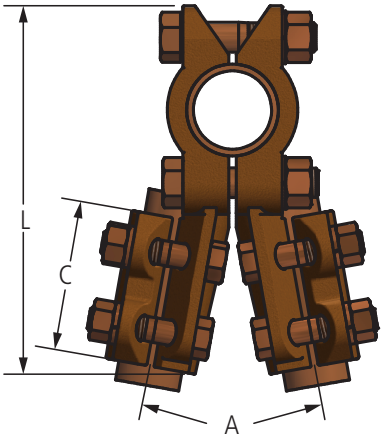

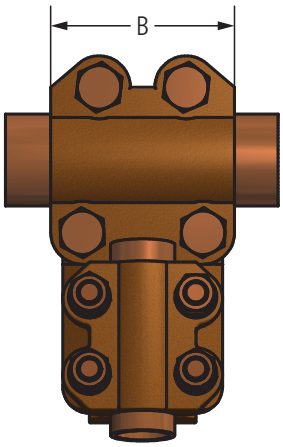

Ordering Information

CATALOG NUMBER	SPS		DIMENSIONS IN INCHES			
	RUN	TAP	A	B	C	L
VBPS125-100-20-1/2	1 1/4	1	20°	2 1/2	2 1/2	6 1/2
VBPS150-100-30-1/2	1 1/2	1	30°	2 3/4	2 1/2	6 5/8
VBPS150-125-20	1 1/2	1 1/4	20°	2 3/4	2 3/4	6 7/8
VBPS200-100-20-1/2	2	1	20°	2 3/4	2 1/2	6 3/4
VBPS200-125-20	2	1 1/4	20°	2 3/4	2 1/2	7
VBPS200-125-30	2	1 1/4	30°	2 13/16	3	7 9/32
VBPS200-150-30	2	1 1/2	30°	2 13/16	2 15/16	7 9/32
VBPS200-200-30	2	2	30°	2 13/16	3	7 9/32
VBPS250-250-20	2 1/2	2 1/2	20°	2 3/4	2 3/4	7 3/8
VBPS250-150-30	2 1/2	1 1/2	30°	2 3/4	2 3/4	7 3/8
VBPS300-200-30	3	2	30°	3	2 3/4	8
VBPS300-300-30	3	3	30°	3	2 3/4	8
VBPS350-200-20	3 1/2	2	20°	3	2 3/4	8 1/2
VBPS350-200-30	3 1/2	2	30°	3	2 3/4	8 1/2

© 2011, AFL, all rights reserved. PP-3-00518, Revision 3, 2.1.18
Specifications are subject to change without notice.

DOSSERT®

TYPE DGF, DGG

Copper Grounding Connector



Copper grounding connector for cable to structural steel, fence posts or groundplates. DGF accommodates two conductors and DGG accommodates one conductor.

Material

Copper Alloy

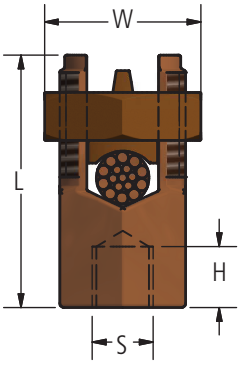

DGG

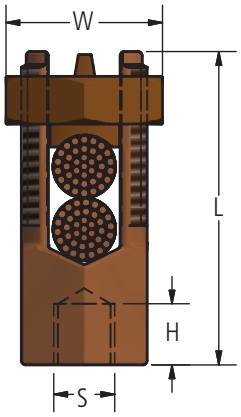

DGF

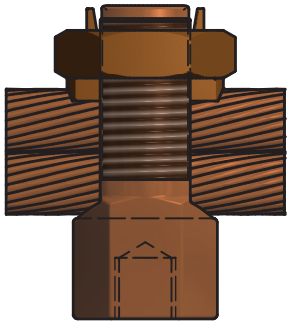

Ordering Information

CATALOG NUMBER		STRANDED CONDUCTOR SIZE		DIMENSIONS IN INCHES			
DGF SERIES	DGG SERIES	MIN	MAX	H	L	S	W
DGF1	DGG1	12 AWG	8 AWG	1/4	15/16	1/4-20	1/2
DGF2	DGG2	10 STR	7 STR	1/4	1 1/16	1/4-20	5/8
DGF3	DGG3	6 STR	5 STR	5/16	1 1/4	5/16-18	11/16
DGF5	DGG5	6 STR	3 STR	3/8	1 7/16	3/8-16	3/4
DGF6	DGG6	4 STR	2 STR	1	1 1/2	3/8-16	16/16
DGF10	DGG10	2 STR	1/0 STR	1/2	1 7/8	1/2-13	15/16
DGF13	DGG13	1/0 STR	2/0 STR	1/2	2	1/2-13	1 1/8
DGF21	DGG21	2/0 STR	4/0 STR	5/8	2 3/8	5/8-11	1 3/8
DGF35	DGG35	4/0 STR	350 MCM	5/8	2 3/4	5/8-11	1 11/16
DGF50	DGG50	300 MCM	500 MCM	3/4	3 1/8	3/4-10	2
DGF75	DGG75	500 MCM	750 MCM	7/8	4	7/8-9	2 3/8
DGF100	DGG100	750 MCM	1000 MCM	1	4 11/16	1-8	2 3/4

© 2011, AFL, all rights reserved. PP-3-00308, Revision 0, 2.24.11
Specifications are subject to change without notice.

DOSSERT®

TYPE DGM, DGN

DGN Copper Grounding Connector for One Cable and DGM Copper Grounding Connector for Two Cables.

Copper grounding connector for cable to structural steel, fence posts or groundplates. May also be used on bus bar as a tap lug. DGM accommodates two conductors and DGN accommodates one conductor.

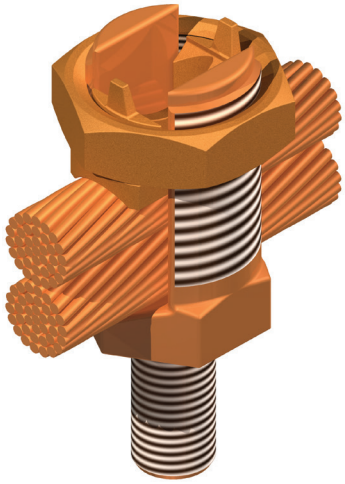

Material

Copper Alloy

Note

For tin plating add suffix "-SN" to the end of the catalog number.

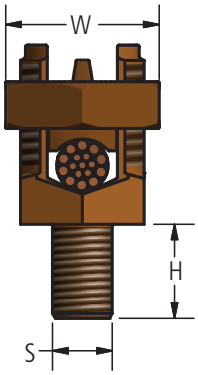

DGN

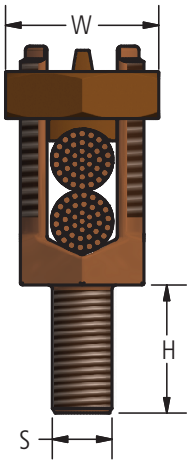

DGM



Ordering Information

CATALOG NUMBER		CONDUCTOR SIZE		DIMENSIONS IN INCHES		
		MIN	MAX	H	STUD DIAMETER (S)	W
DGM1	DGN1	10 STR	8 STR	1/2	1/4-20	1/2
DGM1L	DGN1L	10 STR	8 STR	1	1/4-20	1/2
DGM2	DGN2	10 STR	7 STR	1/2	1/4-20	5/8
DGM2L	DGN2L	10 STR	7 STR	1	1/4-20	5/8
DGM3	DGN3	6 STR	5 STR	5/8	5/16-18	11/16
DGM3L	DGN3L	6 STR	5 STR	1	5/16-18	11/16
DGM5	DGN5	6 STR	3 STR	5/8	3/8-16	3/4
DGM5L	DGN5L	6 STR	3 STR	1 1/8	3/8-16	3/4
DGM6	DGN6	4 STR	2 STR	5/8	3/8-16	13/16
DGM6L	DGN6L	4 STR	2 STR	1 1/8	3/8-16	13/16
DGM10	DGN10	2 STR	1/0 STR	3/4	1/2-13	15/16
DGM10L	DGN10L	2 STR	1/0 STR	1 1/4	1/2-13	15/16
DGM13	DGN13	1/0 STR	2/0 STR	3/4	1/2-13	1 1/8
DGM13L	DGN13L	1/0 STR	2/0 STR	1 1/4	1/2-13	1 1/8
DGM21	DGN21	2/0 STR	4/0 STR	1	5/8-11	1 3/8
DGM21L	DGN21L	2/0 STR	4/0 STR	1 1/2	5/8-11	1 3/8
DGM35	DGN35	4/0 STR	350 MCM	1	5/8-11	1 11/16
DGM35L	DGN35L	4/0 STR	350 MCM	1 1/2	5/8-11	1 11/16
DGM50	DGN50	300 MCM	500 MCM	1 1/4	3/4-10	2
DGM50L	DGN50L	300 MCM	500 MCM	1 3/4	3/4-10	2

© 2011, AFL, all rights reserved. PP-3-00309, Revision 0, 2.24.11
Specifications are subject to change without notice.

DOSSERT®

TYPE DSU, DSUS

Heavy Duty Copper ServiceDSU comes without a spacer and retaining ring, DSUS has a spacer and retaining ring.

Rugged high strength but compact and easy to tape service connector.Washer and swivel action permit easy installation of conductors without inconvenience of loose hardware. Designed with extra wide contact.Particularly suitable for heavy duty permanent connections.

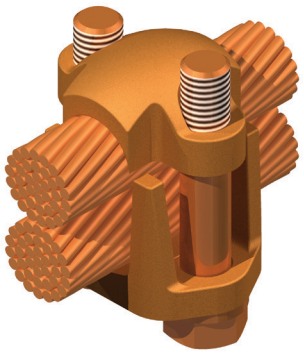

DSU

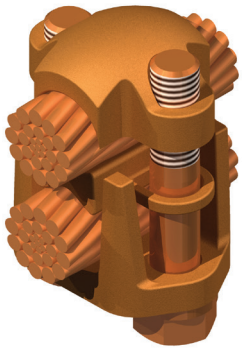

DSUS

Material

Copper Alloy

Hardware

Everdur bolts, lockwashers and neoprene retainer

Notes

For 500 MCM connector with spacer, order: DSUS50.

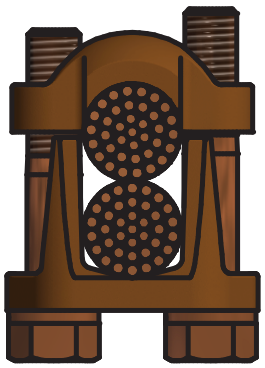

DSU

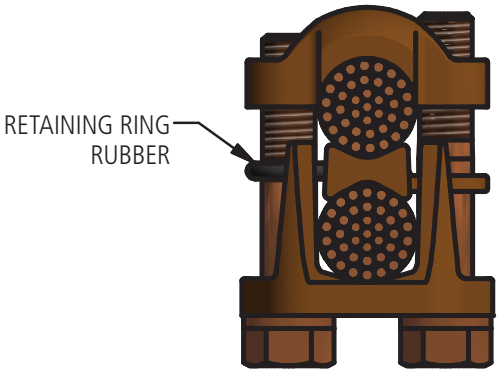

DSUS

Ordering Information

CATALOG NUMBER		MAXIMUM CONDUCTOR	
DSU	DSUS	COPPER	COPPERCLAD
DSU10	DSUS10	1/0 Str.-2/0 Solid	2/0 Solid
DSU13	DSUS13	2/0 Str.-3/0 Solid	3/0 Solid
DSU21	DSUS21	4/0 Sol.-4/0	4/0 Solid
DSU35	DSUS35	350 MCM	-
DSU50	DSUS50	500 MCM	-
DSU80	DSUS80	800 MCM	-
DSU100	DSUS100	1000 MCM	-

© 2011, AFL, all rights reserved. PP-3-00323, Revision 1, 10.7.16
Specifications are subject to change without notice.

DOSSERT®

TYPE DSUN

Heavy Duty Tin Plated Copper Service

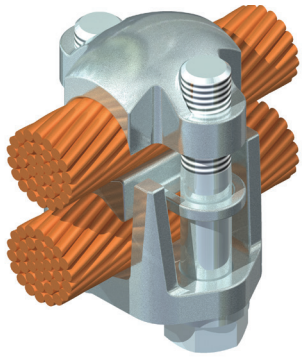

Rugged high strength but compact and easy to tape service connector. Washer and swivel action permit easy installation of conductors without inconvenience of loose hardware. Designed with extra wide contact. Particularly suitable for heavy duty permanent connections. Tin Plated with a spacer bar to accommodate all combinations of copper, aluminum and ACSR conductor.

Material

Tin plated copper alloy

Hardware

Everdur bolts and lockwashers

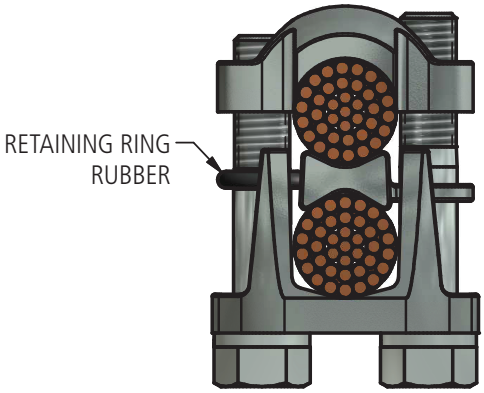

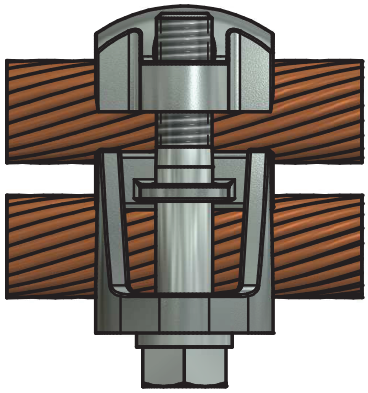

Ordering Information

CATALOG NUMBER	CABLE RUN AND TAP				STEEL DIAMETER IN INCHES	SHIPPING WEIGHT POUNDS PER CARTON	QUANTITY IN CARTON
	COPPER	COPPERCLAD	ALUMINUM AWG	ALUMINUM ACSR			
DSUN10	1/0 Str.-2/0 Solid	2/0 Solid	1/0 Stranded	1/0	-	24	25
DSUN13	2/0 Str.-3/0 Solid	3/0 Solid	2/0 Stranded	2/0	7/16	50	25
DSUN21	4/0 Sol.-4/0	4/0 Solid	4/0 Stranded	3/0	1/2	72	25
DSUN35	350 MCM	-	350 MCM	300 MCM	5/8	120	12
DSUN50	500 MCM	-	500 MCM	397.5 MCM	3/4	150	12
DSUN80	800 MCM	-	800 MCM	715.5 MCM	1	240	6
DSUN100	1000 MCM	-	1000 MCM	900 MCM	1 1/8	320	6

© 2011, AFL, all rights reserved. PP-3-00324, Revision 1, 10.7.16
Specifications are subject to change without notice.

DOSSERT®
TYPE ES, ESS, ESSN

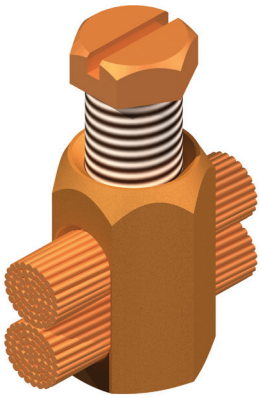

An econmical house service entrance connector for joining two cables on end. This compact connector can be readily installed with either a wrench, pliers or a screw driver. Type ESS has multiple applications, it can be used with Copper and Aluminum conductors. Type ESSN is completely tin plated to prevent galvanic corrosion between two dissimilar metals.

Material
Copper Alloy

Screw
Everdur

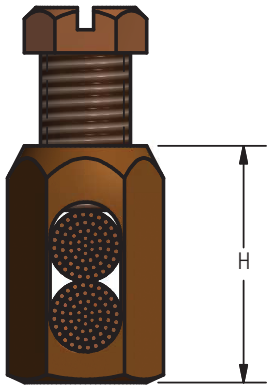

ES

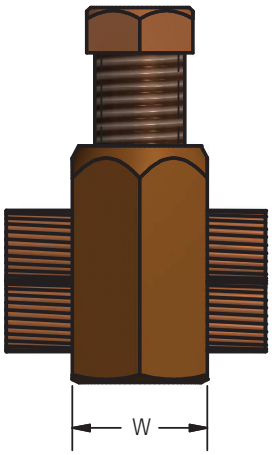

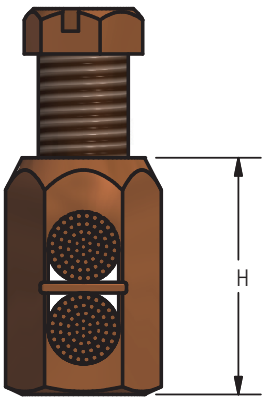

ESS AND ESSN

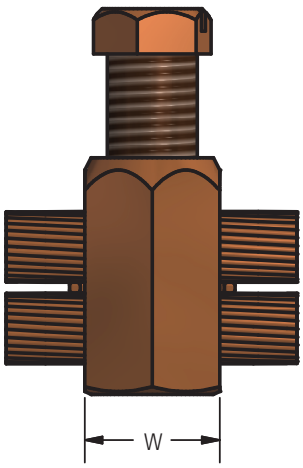

Ordering Information

CATALOG NUMBER			COPPER OR ALUMINUM CABLE		ALUMINUM ACSR		DIMENSIONS IN INCHES	
			MIN	MAX	MIN	MAX	H	W
ES-09	ESS-09	ESSN-09	12 SOL.	10 STR.	-	-	0.500	0.312
ES-1	ESS-1	ESSN-1	10 SOL.	8 STR.	-	-	0.560	0.312
ES-2	ESS-2	ESSN-2	8 SOL.	6 STR.	-	-	0.656	0.375
ES-4	ESS-4	ESSN-4	6 SOL.	4 STR.	8	5	0.750	0.438
ES-6	ESS-6	ESSN-6	4 SOL.	2 STR.	6	3	0.838	0.560

© 2011, AFL, all rights reserved. PP-3-00329, Revision 0, 2.24.11
Specifications are subject to change without notice.

DOSSERT®

TYPE GPEX

Copper Universal Clamp For Cable

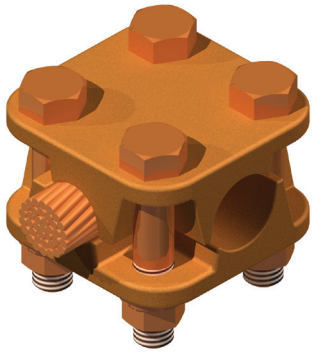

A versatile connector which takes a range of conductor sizes in two positions. Bolt positions held to NEMA standards enabling cable or pipe to be bolted directly to flat bar. Both outside faces machined flat for contact purposes. Used in conjunction with type CF braid straps to make various types of expansion connectors. Unless otherwise specified, bolt length supplied to accommodate one 1/4 inch bar.

Material

Copper Alloy

Hardware

Everdur bolts, nuts and lockwashers

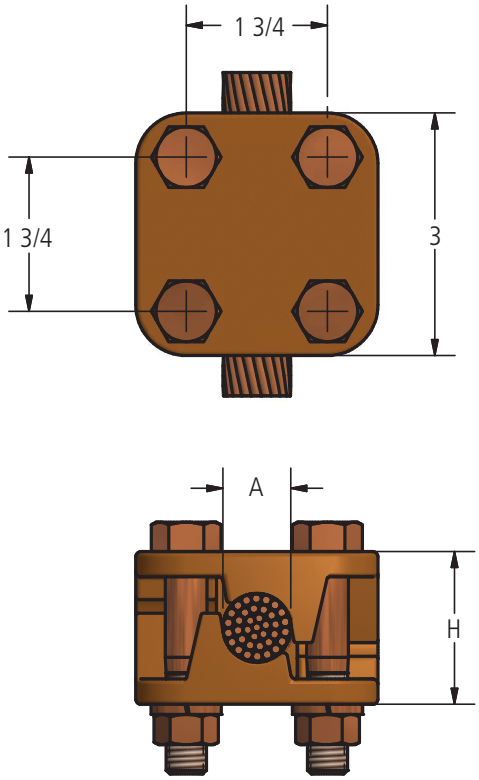

Ordering Information

CATALOG NUMBER	PIPE RANGE (A) SPS	CABLE RANGE A		DIAMETER RANGE A		PIPE RANGE (B) SPS	CABLE RANGE B		DIAMETER RANGE B		DIMENSIONS IN INCHES
		MIN	MAX	MIN	MAX		MIN	MAX	MIN	MAX	H
GPEX38-25	1/4	1 Stranded	4/0 Stranded	0.332	0.528	3/8	4/0 Stranded	350 MCM	0.528	0.681	1 3/8
GPEX75-50	1/2	300 MCM	500 MCM	0.630	0.814	3/4	550 MCM	800 MCM	0.855	1.031	1 5/8
GPEX100-75	3/4	550 MCM	800 MCM	0.855	1.031	1	900 MCM	1250 MCM	1.094	1.289	2 1/8

© 2011, AFL, all rights reserved. PP-3-00351, Revision 0, 2.24.11
Specifications are subject to change without notice.

DOSSERT®

TYPE GTV

Copper Gutter Tap Connector

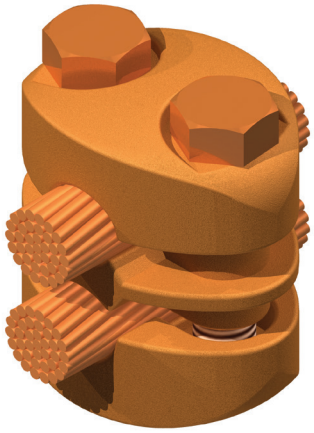

A variable type gutter tap which accommodates a wide range of cable sizes in both main and tap clamping sections. The variability of this unit minimizes the number of connectors required for a given number of combinations of cables. Compact in design and easy to tape.

Material

Copper Alloy

Hardware

Everdur bolts and lockwashers

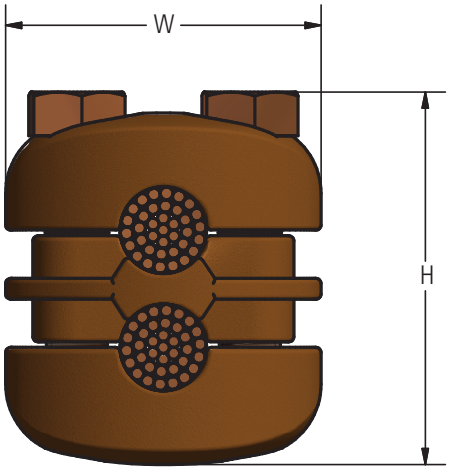

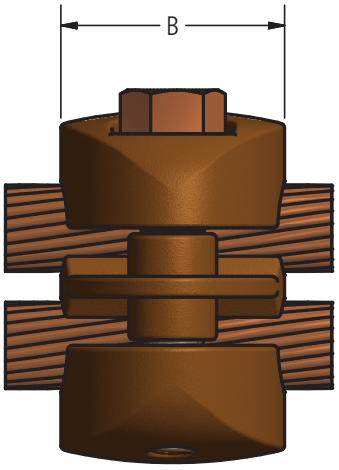

© 2011, AFL, all rights reserved. PP-3-00360, Revision 2, 7.20.2023
Specifications are subject to change without notice.

DOSSERT®

TYPE GTV
Copper Gutter Tap Connector

Ordering Information

CATALOG NUMBER	CONDUCTOR				CLAMPING BOLTS	DIMENSIONS IN INCHES			BOLT SIZE
	RANGE MAIN		RANGE TAP						
	MINIMUM	MAXIMUM	MINIMUM	MAXIMUM		B	H MAX	W	
GTV4-4	8 SOLID	4 STRANDED	8 SOLID	4 STRANDED	2	1 1/8	1 9/16	1 9/16	3/8
GTV6-4	6 STRANDED	2 STRANDED	8 SOLID	4 STRANDED	2	1 1/8	1 9/16	1 9/16	3/8
GTV6-6	6 STRANDED	2 STRANDED	6 STRANDED	2 STRANDED	2	1 1/8	1 9/16	1 9/16	3/8
GTV13-4	3 STRANDED	2/0 STRANDED	8 SOLID	4 STRANDED	2	1 1/8	2	1 3/4	3/8
GTV13-6	3 STRANDED	2/0 STRANDED	6 STRANDED	2 STRANDED	2	1 1/8	1 7/8	1 3/4	3/8
GTV13-13	3 STRANDED	2/0 STRANDED	3 STRANDED	2/0 STRANDED	2	1 1/8	2 1/16	1 3/4	3/8
GTV21-4	1 STRANDED	4/0 STRANDED	8 SOLID	4 STRANDED	2	1 1/8	1 15/16	1 7/8	3/8
GTV21-6	1 STRANDED	4/0 STRANDED	6 STRANDED	2 STRANDED	2	1 1/8	2	1 7/8	3/8
GTV21-13	1 STRANDED	4/0 STRANDED	3 STRANDED	2/0 STRANDED	2	1 1/8	2	1 7/8	3/8
GTV21-21	1 STRANDED	4/0 STRANDED	1 STRANDED	2 STRANDED	2	1 1/8	2 1/8	1 7/8	3/8
GTV35-4	3/0 STRANDED	350 MCM	8 SOLID	4 STRANDED	2	1 3/8	2 1/16	2 1/8	3/8
GTV35-6	3/0 STRANDED	350 MCM	6 STRANDED	2 STRANDED	2	1 3/8	2 1/8	2 1/8	3/8
GTV35-13	3/0 STRANDED	350 MCM	3 STRANDED	2/0 STRANDED	2	1 3/8	2 1/4	2 1/8	3/8
GTV35-21	3/0 STRANDED	350 MCM	1 STRANDED	4/0 STRANDED	2	1 3/8	2 3/8	2 1/8	3/8
GTV35-35	3/0 STRANDED	350 MCM	3/0 STRANDED	350 MCM	2	1 1/4	2 3/16	1 15/16	3/8
GTV50-4	250 MCM	500 MCM	8 SOLID	4 STRANDED	2	1 3/8	2 5/16	2 1/4	3/8
GTV50-6	250 MCM	500 MCM	6 STRANDED	2 STRANDED	2	1 3/8	2 3/8	2 1/4	3/8
GTV50-13	250 MCM	500 MCM	3 STRANDED	2/0 STRANDED	2	1 3/8	2 1/2	2 1/4	3/8
GTV50-21	250 MCM	500 MCM	1 STRANDED	4/0 STRANDED	2	1 3/8	2 3/4	2 1/4	3/8
GTV50-35	250 MCM	500 MCM	3/0 STRANDED	350 MCM	2	1 3/8	2 7/8	2 1/4	3/8
GTV50-50	250 MCM	500 MCM	250 MCM	500 MCM	4	1 3/4	2 15/16	2 1/4	3/8
GTV80-4	400 MCM	800 MCM	8 SOLID	4 STRANDED	2	1 1/2	2 7/16	2 1/2	3/8
GTV80-6	400 MCM	800 MCM	6 STRANDED	2 STRANDED	2	1 1/2	2 1/2	2 1/2	3/8
GTV80-13	400 MCM	800 MCM	3 STRANDED	2/0 STRANDED	2	1 1/2	2 5/8	2 1/2	3/8
GTV80-21	400 MCM	800 MCM	1 STRANDED	4/0 STRANDED	2	1 1/2	2 3/4	2 1/2	3/8
GTV80-35	400 MCM	800 MCM	3/0 STRANDED	350 MCM	2	1 1/2	2 7/8	2 1/2	3/8
GTV80-50	400 MCM	800 MCM	250 MCM	500 MCM	4	1 3/4	3	2 1/2	3/8
GTV80-80	400 McM	800 MCM	400 MCM	800 MCM	4	1 3/4	3 1/4	2 1/2	3/8
GTV100-4	500 MCM	1000 MCM	8 SOLID	4 STRANDED	2	1 1/2	2 9/16	2 5/8	3/8
GTV100-6	500 MCM	1000 MCM	6 STRANDED	2 STRANDED	2	1 1/2	2 5/8	2 5/8	3/8
GTV100-13	500 MCM	1000 MCM	3 STRANDED	2/0 STRANDED	2	1 1/2	2 3/4	2 5/8	3/8
GTV100-21	500 MCM	1000 MCM	1 STRANDED	4/0 STRANDED	2	1 1/2	2 7/8	2 5/8	3/8
GTV100-35	500 MCM	1000 MCM	3/0 STRANDED	350 MCM	2	1 1/2	3	2 5/8	3/8
GTV100-50	500 MCM	1000 MCM	250 MCM	500 MCM	4	1 3/4	3 1/8	2 5/8	3/8
GTV100-80	500 MCM	1000 MCM	400 MCM	800 MCM	4	1 3/4	3 3/8	2 5/8	3/8
GTV100-100	500 MCM	1000 MCM	500 MCM	1000 MCM	4	1 3/4	3 1/2	2 5/8	3/8
GTV150-4	850 MCM	1500 MCM	8 SOLID	4 STRANDED	2	1 3/4	3 5/16	2 7/8	3/8
GTV150-6	850 MCM	1500 MCM	6 STRANDED	2 STRANDED	2	1 3/4	3 3/8	2 7/8	3/8
GTV150-13	850 MCM	1500 MCM	3 STRANDED	2/0 STRANDED	2	1 3/4	3 1/2	2 7/8	3/8
GTV150-21	850 MCM	1500 MCM	1 STRANDED	4/0 STRANDED	2	1 3/4	3 5/8	2 7/8	3/8
GTV150-35	850 MCM	1500 MCM	3/0 STRANDED	350 MCM	2	1 3/4	3 3/4	2 7/8	3/8
GTV150-50	850 MCM	1500 MCM	250 MCM	500 MCM	4	1 3/4	3 7/8	2 7/8	3/8
GTV150-80	850 MCM	1500 MCM	400 MCM	800 MCM	4	1 3/4	4	2 7/8	3/8
GTV150-100	850 MCM	1500 MCM	500 MCM	1000 MCM	4	1 3/4	4 1/8	2 7/8	3/8
GTV150-150	850 MCM	1500 MCM	850 MCM	1500 MCM	4	2 1/4	4 3/8	3 1/4	1/2
GTV200-4	1200 MCM	2000 MCM	8 SOLID	4 STRANDED	2	2	3 3/16	3	3/8
GTV200-6	1200 MCM	2000 MCM	6 STRANDED	2 STRANDED	2	2	3 1/4	3	3/8
GTV200-13	1200 MCM	2000 MCM	3 STRANDED	2/0 STRANDED	2	2	3 3/8	3	3/8
GTV200-21	1200 MCM	2000 MCM	1 STRANDED	4/0 STRANDED	2	2	3 1/2	3	3/8
GTV200-35	1200 MCM	2000 MCM	3/0 STRANDED	350 MCM	4	2 3/8	3 15/16	3 1/4	3/8
GTV200-50	1200 MCM	2000 MCM	250 MCM	500 MCM	4	2 1/4	3 15/16	3	3/8
GTV200-80	1200 MCM	2000 MCM	400 MCM	800 MCM	4	2	4	3	3/8
GTV200-100	1200 MCM	2000 MCM	500 MCM	1000 MCM	4	2	4 1/4	3	3/8
GTV200-150	1200 MCM	2000 MCM	850 MCM	1500 MCM	4	2 1/4	4 1/2	3 1/2	3/8
GTV-200-200	1200 MCM	2000 MCM	1200 MCM	200 0MCM	4	2 1/4	4 3/4	3 1/2	1/2

© 2011, AFL, all rights reserved. PP-3-00360, Revision 2, 7.20.2023
Specifications are subject to change without notice.

DOSSERT®

TYPE GTX

Copper Two Position Variable Distribution Tap

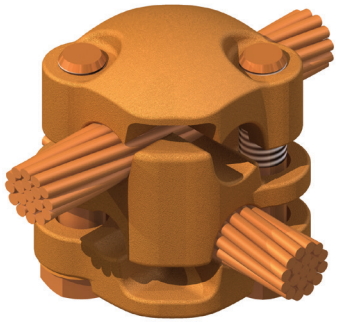

A variable type distribution tap for making parallel taps and cross connections. Each connector accommodates a range of cable sizes in each position.

Material

Copper Alloy

Hardware

Everdur bolts and lockwashers

Note

For tin plating add suffix "-SN" to catalog number.

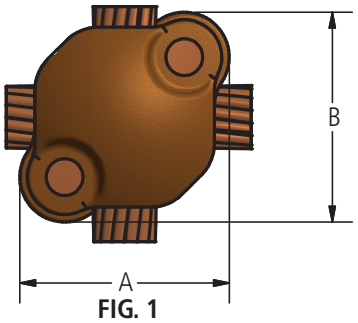

FIG. 1

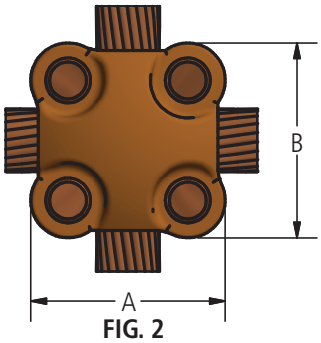

FIG. 2

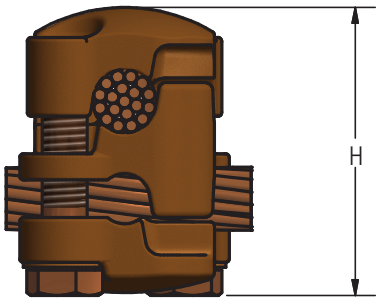

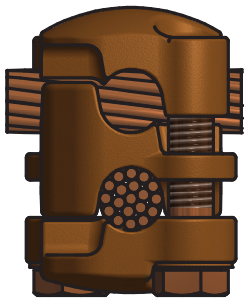

Ordering Information

CATALOG NUMBER	FIG. NO.	CABLE RANGE				DIMENSIONS IN INCHES			U-BOLT SIZE
		RUN		TAP		A	B	H	
		MIN	MAX	MIN	MAX				
GTX6-6	1	6 Stranded	2 Stranded	6 Stranded	2 Stranded	1 3/8	1 3/8	1 3/4	5/16
GTX21-6	1	1 Stranded	4/0 Stranded	6 Stranded	2 Stranded	1 5/8	1 1/2	2	5/16
GTX21-21	1	1 Stranded	4/0 Stranded	1 Stranded	4/0 Stranded	1 3/4	1 3/4	2 3/8	3/8
GTX50-6	1	250 MCM	500 MCM	6 Stranded	2 Stranded	1 7/8	1 5/8	2 5/16	5/16
GTX50-21	1	250 MCM	500 MCM	1 Stranded	4/0 Stranded	1 13/16	2 1/16	2 3/4	3/8
GTX50-50	2	250 MCM	500 MCM	250 MCM	500 MCM	2 1/16	2 1/16	3	3/8
GTX100-6	1	500 MCM	1000 MCM	6 Stranded	2 Stranded	2 1/4	2 3/8	2 7/8	3/8
GTX100-21	1	500 MCM	1000 MCM	1 Stranded	4/0 Stranded	2 1/4	2 3/8	3 1/4	3/8
GTX100-50	2	500 MCM	1000 MCM	250 MCM	500 MCM	2 1/4	2 3/8	3 5/8	3/8
GTX100-100	2	500 MCM	1000 MCM	500 MCM	1000 MCM	2 3/8	2 3/8	3 7/8	3/8

© 2011, AFL, all rights reserved. PP-3-00361, Revision 0, 2.24.11
Specifications are subject to change without notice.

DOSSERT®

TYPE PC

Copper Connector For Two Cable In Parallel

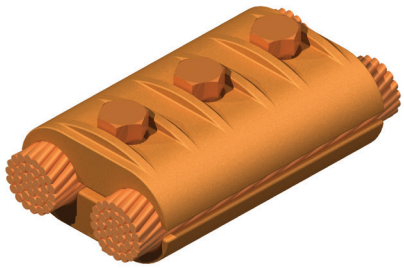

A clamp type connector for connecting two cable or wire conductors in parallel. Specially serated bearing areas provide a high electrical contact efficiency and high pull-out strength.

Material

Copper Alloy

Hardware

Everdur bolts, nuts and lockwashers

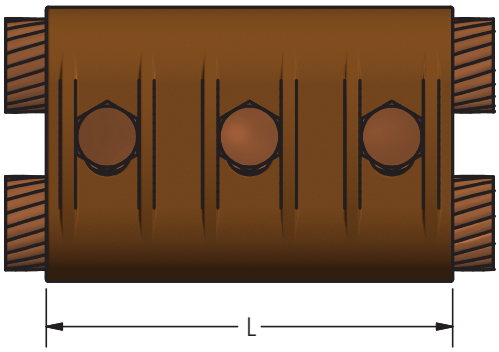

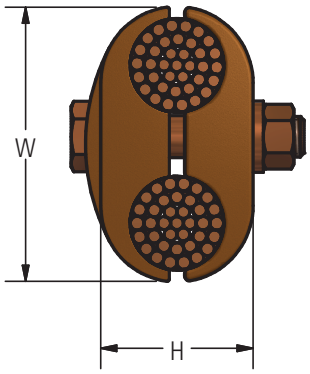

Ordering Information

CATALOG NUMBER	CABLE RANGE		DIMENSIONS IN INCHES			BOLT SIZE
	RUN	TAP	H	L	W	
PC4-4	4	4 Str	9/16	2 1/4	1 5/16	5/16
PC5-4	3	4 Str	9/16	2 1/4	1 5/16	5/16
PC5-5	3	3 Str	9/16	2 1/4	1 5/16	5/16
PC6-4	2	4 Str	5/8	2 1/4	1 3/8	5/16
PC6-5	2	3 Str	5/8	2 1/4	1 3/8	5/16
PC6-6	1	2 Str	3/4	2 1/4	1 1/2	5/16
PC8-4	1 Str	4 Str	3/4	2 1/4	1 3/8	5/16
PC8-5	1 Str	3 Str	3/4	2 1/4	1 3/8	5/16
PC8-6	1 Str	2 Str	3/4	2 1/4	1 7/16	5/16
PC8-8	1 Str	1 Str	3/4	2 1/4	1 7/16	5/16
PC10-4	1/0 Str	4 Str	1	2 1/2	1 5/16	3/8
PC10-5	1/0 Str	3 Str	1	2 1/2	1 7/16	3/8
PC10-6	1/0 Str	2 Str	1	2 1/2	1 1/2	3/8
PC10-8	1/0 Str	1 Str	1	2 1/2	1 1/2	3/8
PC10-10	1/0 Str	1/0 Str	1	3	1 5/8	3/8
PC13-4	2/0 Str	4 Str	1 3/16	2 1/2	1 7/16	3/8
PC13-5	2/0 Str	3 Str	1 3/16	2 1/2	1 1/2	3/8
PC13-6	2/0 Str	2 Str	1 3/16	2 1/2	1 1/2	3/8
PC13-8	2/0 Str	1 Str	1 3/16	2 1/2	1 9/16	3/8
PC13-10	2/0 Str	1/0 Str	1 3/16	3	1 9/16	3/8
PC13-13	2/0 Str	2/0 Str	1 3/16	3	1 5/8	3/8
PC17-4	3/0 Str	4 Str	1 3/16	2 1/2	1 1/2	3/8
PC17-5	3/0 Str	3 Str	1 3/16	2 1/2	1 1/2	3/8
PC17-6	3/0 Str	2 Str	1 3/16	2 3/4	1 9/16	3/8
PC17-8	3/0 Str	1 Str	1 3/16	2 3/4	1 9/16	3/8
PC17-10	3/0 Str	1/0 Str	1 3/16	3	1 5/8	3/8
PC17-13	3/0 Str	2/0 Str	1 3/16	3	1 5/8	3/8
PC17-17	3/0 Str	3/0 Str	1 3/16	4	1 11/16	3/8
PC21-4	4/0 Str	4 Str	1 3/16	2 1/2	1 1/2	3/8
PC21-5	4/0 Str	3 Str	1 3/16	2 1/2	1 9/16	3/8
PC21-6	4/0 Str	2 Str	1 1/8	3	1 7/8	1/2
PC21-8	4/0 Str	1 Str	1 3/16	2 3/4	1 5/8	3/8

© 2011, AFL, all rights reserved. PP-3-00391, Revision 1, 1.10.18
Specifications are subject to change without notice.

DOSSERT®

TYPE PC

Copper Connector For Two Cable In Parallel

Ordering Information

CATALOG NUMBER	CABLE RANGE		DIMENSIONS IN INCHES			BOLT SIZE
	RUN	TAP	H	L	W	
PC21-10	4/0 Str	1/0 Str	1 3/16	3	1 11/16	3/8
PC21-13	4/0 Str	2/0 Str	1 1/16	3	1 11/16	3/8
PC21-17	4/0 Str	3/0 Str	1 3/16	4	1 13/16	3/8
PC21-21	4/0 Str	4/0 Str	1 3/16	4	1 3/4	3/8
PC25-6	250 MCM	2 Str	1 3/16	2 3/4	1 5/8	3/8
PC25-8	250 MCM	1 Str	1 3/16	2 3/4	1 5/8	3/8
PC25-10	250 MCM	1/0 Str	1 3/16	3	1 3/4	3/8
PC25-13	250 MCM	2/0 Str	1 3/16	3	1 3/4	3/8
PC25-17	250 MCM	3/0 Str	1 3/16	4	1 7/8	3/8
PC25-21	250 MCM	4/0 Str	1 3/16	4	1 15/16	3/8
PC25-25	250 MCM	250 MCM	1 3/16	4	2	3/8
PC30-8	300 MCM	1 Str	1 3/16	2 3/4	1 3/4	3/8
PC30-10	300 MCM	1/0 Str	1 3/16	3	1 13/16	3/8
PC30-13	300 MCM	2/0 Str	1 3/16	3	1 15/16	3/8
PC30-17	300 MCM	3/0 Str	1 3/16	4	1 15/16	3/8
PC30-21	300 MCM	4/0 Str	1 3/16	4	2	3/8
PC30-25	300 MCM	250 MCM	1 3/16	4	2 1/16	3/8
PC30-30	300 MCM	300 MCM	1 3/16	4	2 1/16	3/8
PC35-8	350 MCM	1 Str	1 1/4	2 3/4	1 7/8	3/8
PC35-10	350 MCM	1/0 Str	1 1/4	3	1 7/8	3/8
PC35-13	350 MCM	2/0 Str	1 1/4	3	1 7/8	3/8
PC35-17	350 MCM	3/0 Str	1 1/4	4	2	3/8
PC35-21	350 MCM	4/0 Str	1 1/4	4	2	3/8
PC35-25	350 MCM	250 MCM	1 1/4	4	2 1/8	3/8
PC35-30	350 MCM	300 MCM	1 1/4	4	2 1/8	3/8
PC35-35	350 MCM	350 MCM	1 1/4	4	2 3/16	3/8
PC40-10	400 MCM	1/0 Str	1 5/16	3	1 7/8	3/8
PC40-13	400 MCM	2/0 Str	1 5/16	3	1 7/8	3/8
PC40-17	400 MCM	3/0 Str	1 5/16	4	2 1/16	3/8
PC40-21	400 MCM	4/0 Str	1 5/16	4	2 1/16	3/8
PC40-25	400 MCM	250 MCM	1 5/16	4	2 1/8	3/8
PC40-30	400 MCM	300 MCM	1 5/16	4	2 1/8	3/8
PC40-35	400 MCM	350 MCM	1 5/16	4	2 1/4	3/8
PC40-40	400 MCM	400 MCM	1 5/16	4	2 1/4	3/8
PC50-10	500 MCM	1/0 Str	1 3/8	3	1 15/16	3/8
PC50-13	500 MCM	2/0 Str	1 3/8	3	2	3/8
PC50-17	500 MCM	3/0 Str	1 3/8	4	2 3/16	3/8
PC50-21	500 MCM	4/0 Str	1 3/8	4	2 3/16	3/8
PC50-25	500 MCM	250 MCM	1 3/8	4	2 1/4	3/8
PC50-30	500 MCM	300 MCM	1 3/8	4	2 1/4	3/8
PC50-35	500 MCM	350 MCM	1 3/8	4	2 5/16	3/8
PC50-40	500 MCM	400 MCM	1 3/8	4	2 5/16	3/8
PC50-50	500 MCM	500 MCM	1 1/2	5	2 1/2	1/2
PC60-13	600 MCM	2/0 Str	1 1/2	3	2 1/8	3/8
PC60-17	600 MCM	3/0 Str	1 1/2	4	2 3/16	3/8
PC60-21	600 MCM	4/0 Str	1 1/2	4	2 3/16	3/8
PC60-25	600 MCM	250 MCM	1 1/2	4	2 5/16	3/8
PC60-30	600 MCM	300 MCM	1 1/2	4	2 5/16	3/8
PC60-35	600 MCM	350 MCM	1 1/2	4	2 3/8	3/8
PC60-40	600 MCM	400 MCM	1 1/2	4	2 3/8	3/8
PC60-50	600 MCM	500 MCM	1 11/16	5	2 5/8	1/2
PC60-60	600 MCM	600 MCM	1 11/16	5	2 3/4	1/2
PC70-13	700 MCM	2/0 Str	1 5/8	3	2 3/16	3/8
PC70-17	700 MCM	3/0 Str	1 5/8	4	2 1/4	3/8
PC70-21	700 MCM	4/0 Str	1 5/8	4	2 1/4	3/8
PC70-25	700 MCM	250 MCM	1 5/8	4	2 3/8	3/8
PC70-30	700 MCM	300 MCM	1 5/8	4	2 3/8	3/8
PC70-35	700 MCM	350 MCM	1 5/8	4	2 1/2	3/8
PC70-40	700 MCM	400 MCM	1 5/8	4	2 1/2	3/8
PC70-50	700 MCM	500 MCM	1 13/16	5	2 11/16	1/2
PC70-60	700 MCM	600 MCM	1 13/16	5	2 13/16	1/2
PC70-70	700 MCM	700 MCM	1 13/16	5	2 7/8	1/2
PC75-21	750 MCM	4/0 Str	1 11/16	4	2 5/16	3/8

© 2011, AFL, all rights reserved. PP-3-00391, Revision 1, 1.10.18
Specifications are subject to change without notice.

DOSSERT®

TYPE PC

Copper Connector For Two Cable In Parallel

Ordering Information

CATALOG NUMBER	CABLE RANGE		DIMENSIONS IN INCHES			BOLT SIZE
	RUN	TAP	H	L	W	
PC75-25	750 MCM	250 MCM	1 11/16	4	2 7/16	3/8
PC75-30	750 MCM	300 MCM	1 11/16	4	2 7/16	3/8
PC75-35	750 MCM	350 MCM	1 11/16	4	2 1/2	3/8
PC75-40	750 MCM	400 MCM	1 11/16	4	2 1/2	3/8
PC75-50	750 MCM	500 MCM	1 3/4	5	2 3/4	1/2
PC75-60	750 MCM	600 MCM	1 3/4	5	2 7/8	1/2
PC75-70	750 MCM	700 MCM	1 3/4	5	2 15/16	1/2
PC75-75	750 MCM	750 MCM	1 3/4	5	3	1/2
PC80-21	800 MCM	4/0 Str	1 3/4	4	2 15/16	3/8
PC80-25	800 MCM	250 MCM	1 3/4	4	2 7/16	3/8
PC80-30	800 MCM	300 MCM	1 3/4	4	2 7/16	3/8
PC80-35	800 MCM	350 MCM	1 3/4	4	2 1/2	3/8
PC80-40	800 MCM	400 MCM	1 3/4	4	2 5/8	3/8
PC8O-50	800 MCM	500 MCM	1 7/8	5	2 3/4	1/2
PC80-60	800 MCM	600 MCM	1 7/8	5	2 7/8	1/2
PC80-70	800 MCM	700 MCM	1 7/8	5	2 15/16	1/2
PC80-75	800 MCM	750 MCM	1 7/8	5	3	1/2
PC80-80	800 MCM	800 MCM	1 7/8	5	3	1/2
PC100-21	1000 MCM	4/0 Str	1 3/4	4	2 1/2	3/8
PC100-25	1000 MCM	250 MCM	1 3/4	4	2 9/16	3/8
PC100-30	1000 MCM	300 MCM	1 3/4	4	2 9/16	3/8
PC100-35	1000 MCM	350 MCM	1 3/4	4	2 5/8	3/8
PC100-40	1000 MCM	400 MCM	1 3/4	4	2 5/8	3/8
PC100-50	1000 MCM	500 MCM	1 7/8	5	2 7/8	1/2
PC100-60	1000 MCM	600 MCM	1 7/8	5	3	1/2
PC100-70	1000 MCM	700 MCM	1 7/8	5	3 1/16	1/2
PC100-75	1000 MCM	750 MCM	1 7/8	5	3 1/8	1/2
PC100-80	1000 MCM	800 MCM	1 7/8	5	3 1/8	1/2
PC100-100	1000 MCM	1000 MCM	1 7/8	5	3 1/4	1/2

© 2011, AFL, all rights reserved. PP-3-00391, Revision 1, 1.10.18
Specifications are subject to change without notice.

DOSSERT®

TYPE Q2L, Q2L-E

Copper Service Tap Connector For Two Cables To Flat

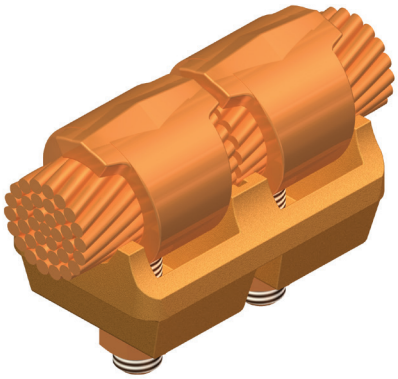

Double tap lugs series are designed to fit NEMA two hole pads with two 9/16 inch holes on 1 3/4 inch center except the small sizes. Compact construction and two high strength clamp members reduce cantilever distance and increase pull out resistance of conductors.

Material

Copper Alloy

Hardware

Everdur nuts and lockwashers

Note

Type Q2L is for use with 1/4 inch bus bar. Type Q2L-E is for use with 1/2-3/4 inch bus bar.

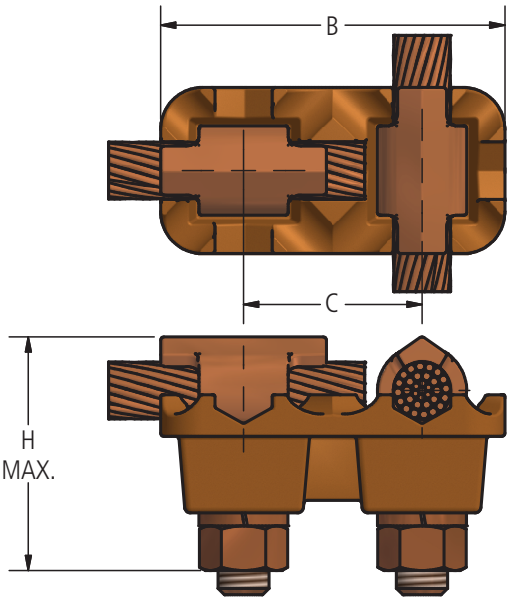

FIG. 1

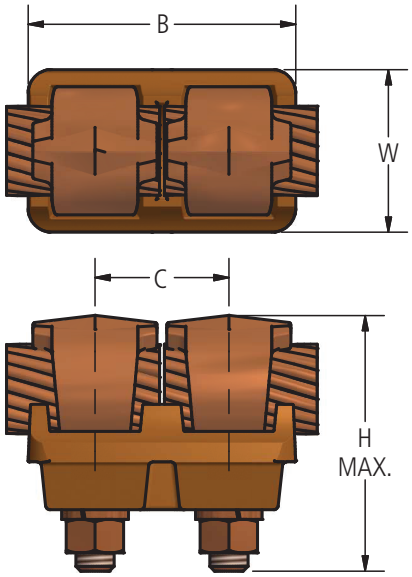

FIG. 2

Ordering Information

CATALOG NUMBER		CABLE RANGE		FIGURE NUMBER	DIMENSIONS IN INCHES				U-BOLT SIZE
		MIN	MAX		B	C	H MAXIMUM	W	
Q2L8	Q2L8E	10 Solid	#1 Stranded	1	2 1/4	1 1/4	1 15/16	1 1/8	3/8
Q2L13	Q2L13E	8 Solid	2/0 Stranded	1	2 3/8	1 1/4	2	1 1/4	3/8
Q2L13-50	Q2L13-50E	8 Solid	2/0 Stranded	1	3 1/8	1 3/4	2 1/4	1 1/2	1/2
Q2L25	Q2L25E	6 Solid	250 MCM	1	3 3/8	1 3/4	2 5/8	1 5/8	1/2
Q2L35	Q2L35E	2 Solid	350 MCM	1	3 1/2	1 3/4	2 3/4	1 3/4	1/2
Q2L50	Q2L50E	1/0 Solid	500 MCM	2	4	1 3/4	3 1/8	1 13/16	1/2
Q2L75	Q2L75E	350 MCM	750 MCM	2	4	1 3/4	3 1/4	1 7/8	1/2
Q2L100	Q2L100E	500 MCM	1000 MCM	2	4	1 3/4	3 3/8	2 1/8	1/2

© 2011, AFL, all rights reserved. 2.24.11
Specifications are subject to change without notice.

DOSSERT®

TYPE QL, QL-E

Service Tap Connector For Cable To Flat Bus Bar

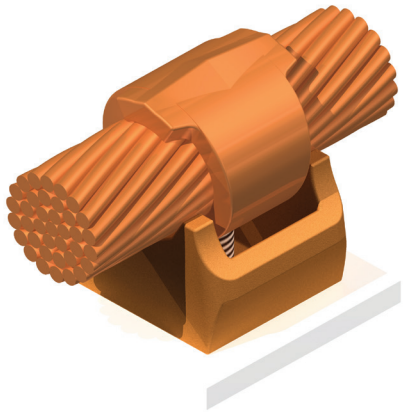

A versatile service tap connector which takes a wide range of cable sizes. Used for mounting on switch pads, current transformer terminals, and miscellaneous flat bus conductors. The single hole mounting enables the plane of the flat bus.

Material

Copper Alloy

Hardware

Everdur nuts and lockwashers

Notes

- QL is for use with 1/4 inch bus bar. Type QL-E is for use with 1/2-3/4 inch bus bar.
- For Stainless Steel Hardware, add "-SS" to catalog number. EX: QL25-SS

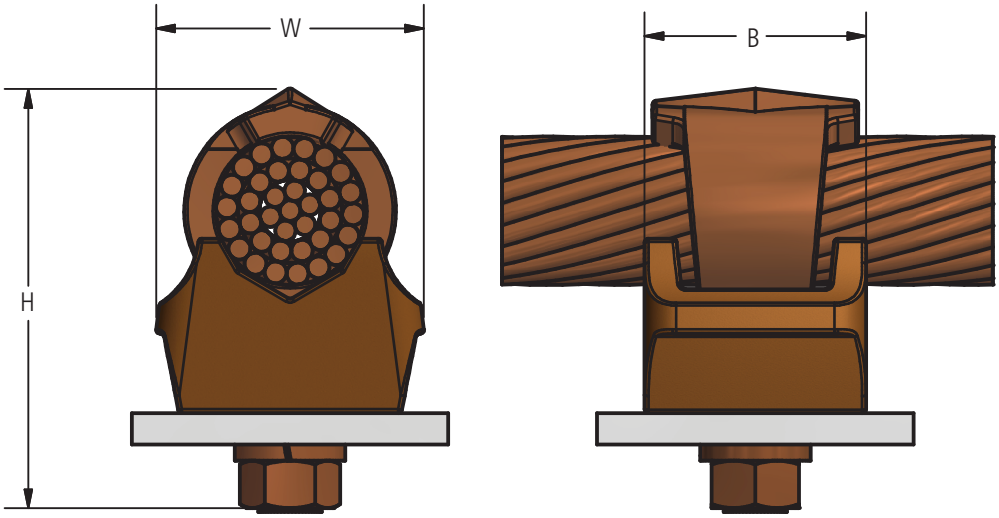

Ordering Information

CATALOG NUMBER		CABLE RANGE		DIMENSIONS IN INCHES			U-BOLT SIZE
1/4" BAR	3/4" BAR	MIN	MAX	B	H MAX	W	
QL8	QL8E	10 Solid	#1 Stranded	1 1/16	1 15/16	7/8	3/8
QL13	QL13E	8 Solid	2/0 Stranded	1 1/4	2	1 1/16	3/8
QL13-50	QL13-50E	8 Solid	2/0 Stranded	1 1/4	2 1/4	1 1/16	1/2
QL25	QL25E	6 Solid	250 MCM	1 5/8	2 5/8	1 5/16	1/2
QL35	QL35E	2 Solid	350 MCM	1 11/16	2 3/4	1 3/8	1/2
QL50	QL50E	1/0 Solid	500 MCM	2 3/16	3 1/8	1 3/4	1/2
QL75	QL75E	350 MCM	750 MCM	2 1/4	3 1/4	1 7/8	1/2
QL100	QL100E	500 MCM	1000 MCM	2 1/4	3 3/8	2 1/16	1/2

© 2011, AFL, all rights reserved. PP-3-00425, Revision 1, 11.9.18
Specifications are subject to change without notice.

DOSSERT®

TYPE TL, TL-E, T2L, T2L-E

Copper Low Mount Tap Lug For Cable To Flat Bar

A low mount tap lug for cable to bar connections. Finds wide application on current transformers and tap connections for metering equipment. See Type T2L for double tap design. Type T2L is designed to meet NEMA pad drilling and all sizes can mount side by side without interference.

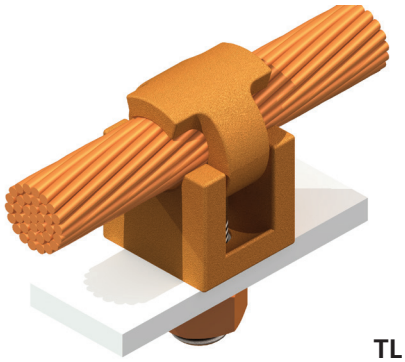

TL

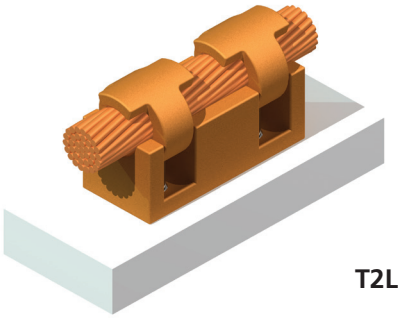

T2L

Material

Copper Alloy

Eyebolt- Aluminum Bronze

Hardware

Nut and lock washers-Everdur.

Note

- Type TL is for use with 1/4 inch bar. Type TL-E is use with 1/2 - 3/4 inch bar.
- For Double Tap lug change TL to T2L.
- For Silver palted finish add suffix (AG) to catalog number Ex: TL13-AG

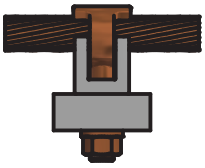

TL AND TL-E

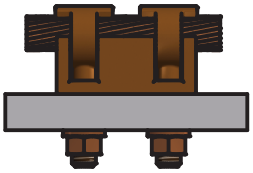

T2L AND T2L-E

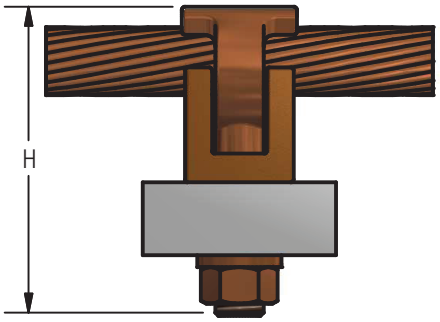

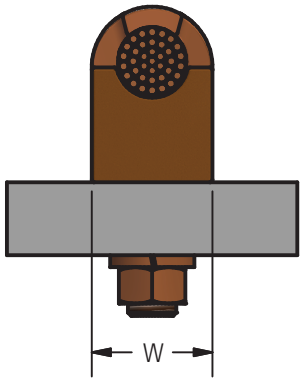

Ordering Information

FOR BAR THICKNESS				CABLE RANGE		DIMENSIONS IN INCHES COMMON TO BOTH 1/4 AND 3/4 TYPES		
1/4"		3/4"						
CATALOG NUMBER	H	CATALOG NUMBER	H	MIN	MAX	B	W	BOLT SIZE
TL6	1 3/4	TL6E	2 1/4	10 Solid	#2 Str	13/16	3/4	3/8
TL13	2 3/16	TL13E	2 11/16	8 Solid	2/0 Str	1	1	1/2
TL25	2 7/16	TL25E	2 15/16	6 Solid	250 MCM	1	1	1/2
TL35	2 11/16	TL35E	3 3/16	2 Solid	350 MCM	1 1/8	1 1/4	1/2
TL50	2 7/8	TL50E	3 3/8	#1/0 Solid	500 MCM	1 5/16	1 5/16	1/2
TL75	2 13/16	TL75E	3 5/16	350 MCM	750 MCM	1 3/8	1 1/2	1/2
TL100	3 1/4	TL100E	3 3/4	500 MCM	1000 MCM	1 1/2	1 11/16	1/2

© 2011, AFL, all rights reserved. PP-3-00477, Revision 0, 2.24.11
Specifications are subject to change without notice.

DOSSERT®

TYPE TRV
Parallel Connector

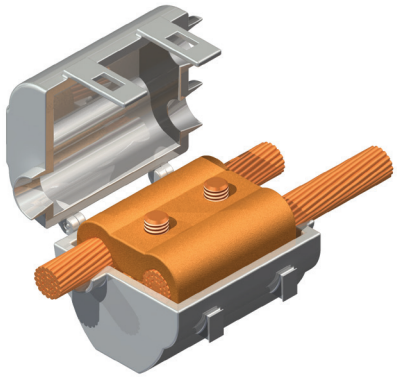

Material
Copper Alloy

Hardware
Everdur-bolts and lock washers, Black Polyethylene Cover.

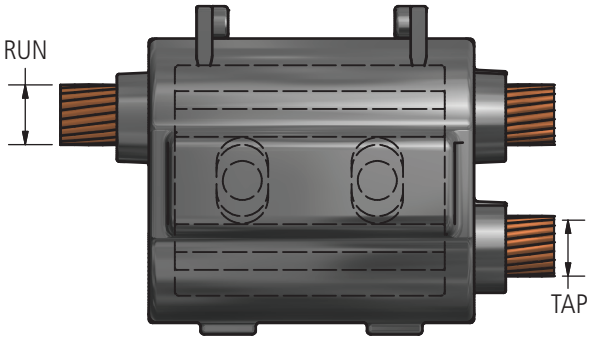

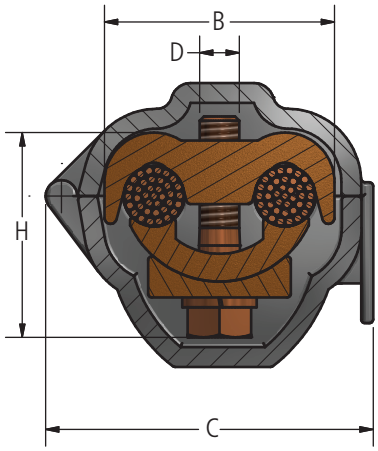

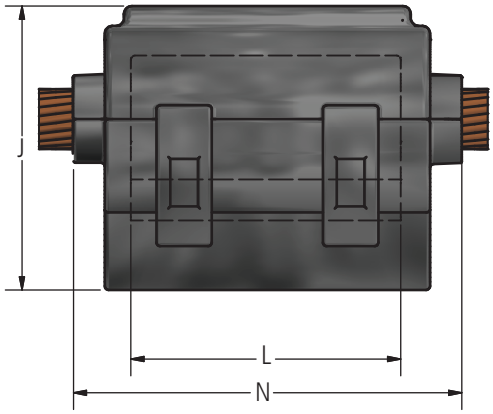

Ordering Information

CATALOG NUMBER	CABLE RANGE				DIMENSIONS IN INCHES						
	MAIN		TAP		B	C	D	H	J	L	N
	MIN	MAX	MIN	MAX							
TRV10-10	#8	# 1/0	#8	# 1/0	1 8/16	2 11/32	5/16	1 6/16	1 25/32	1 10/16	2 5/8
TRV17-10	#4	# 3/0	#8	# 1/0	17/10	2 19/32	3/8	1 10/16	2 1/32	2 2/16	3 1/8
TRV17-17	#4	# 3/0	#4	# 3/0	1 3/4	2 19/32	3/8	1 10/16	2 1/32	2 2/16	3 1/8
TRV10-35	#8	# 1/0	# 3/0	350	2 1/16	2 15/16	3/8	1 14/16	2 7/32	2 2/16	3 1/8
TRV35-10	# 3/0	350	#8	# 1/0	2 1/16	2 15/16	3/8	1 14/16	2 7/32	2 2/16	3 1/8
TRV35-35	# 3/0	350	# 3/0	350	2 5/16	3 5/32	3/8	1 15/16	2 1/4	2 2/16	3 1/8

© 2011, AFL, all rights reserved. PP-3-00483, Revision 0, 2.24.11
Specifications are subject to change without notice.

DOSSERT®

TYPE UD

Universal Parallel Clamp

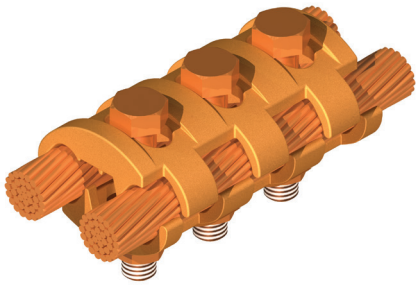

A universal clamp to provide a connection for two cables or wires over a wide range of sizes. The interlocking of the halves of this clamp insures a good grip and high area of a contact for all conductors.

Material

Copper Alloy

Hardware

Everdur bolts, nuts and lockwashers

Notes

- Voltage rating is 230KV
- For tin plating add "-SN" to end of catalog number. EX: UD50-21-SN
- Also add "GS" for galvanized steel hardware.

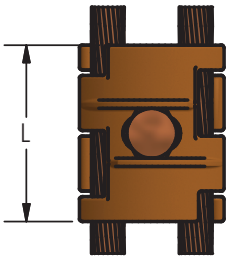

FIG. 1

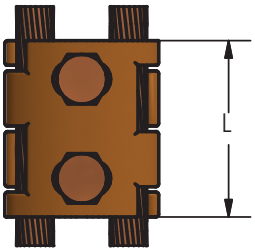

FIG. 2

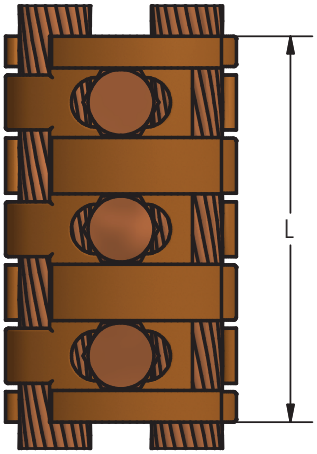

FIG. 3

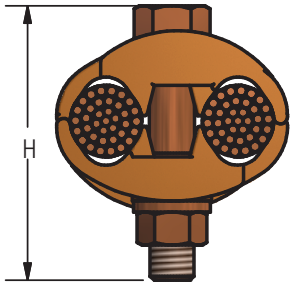

Ordering Information

CATALOG NUMBER	CONDUCTOR RANGE FOR RUN AND TAP	FIG. NO.	DIMENSIONS IN INCHES		
			H	L	BOLT SIZE
UD10-2	No. 6 Solid - 1/0 Stranded	1	1 3/4	2	3/8
UD21-4	No. 4 Solid - 4/0 Stranded	2	2	2 1/4	3/8
UD30-6	No. 2 Solid - 300 kcmil	2	2 1/4	2 1/2	3/8
UD50-21	4/0 Stranded - 500 kcmil	3	2 3/4	4 3/8	1/2
UD80-30	300 Stranded - 800 kcmil	3	3 1/4	4 1/2	1/2
UD100-50	500 Stranded - 1000 kcmil	3	3 1/2	4 5/8	1/2

© 2011, AFL, all rights reserved. PP-3-00489, Revision 0, 2.24.11
Specifications are subject to change without notice.

DOSSERT®

TYPE UDV

Compact Parallel Groove Connector

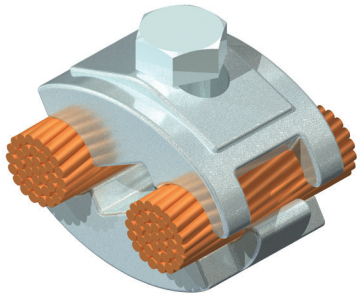

A compact parallel groove connector which is designed for use on either copper, aluminum, ACSR, Copperclad, amerductor, steel or any combination thereof. This light duty connector accepts a wide range of conductor sizes.

Material

Tin Plated Copper Alloy

Hardware

Everdur bolts, nuts and lockwashers

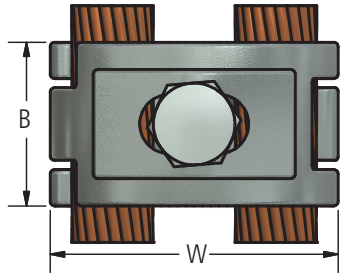

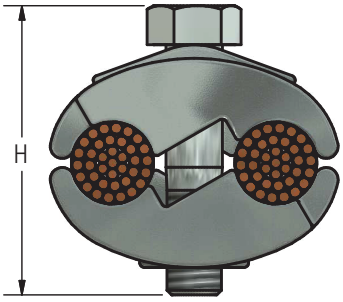

Ordering Information

CATALOG NUMBER	DIMENSIONS IN INCHES			
	B	H	W	BOLT SIZE
UDV13	1	1 3/16	1 7/16	5/16
UDV21	1 1/8	1 1/2	1 3/4	3/8

CONDUCTORS	CONDUCTOR RANGE			
	UDV13		UDV21	
	CONDUCTOR RANGE		CONDUCTOR RANGE	
	MIN	MAX	MIN	MAX
COPPER	#8 SOL.	2/0 STR.	#2 SOL.	4/0 STR.
A.C.S.R	#6	1/0	#3	4/0
COPPERCLAD	#8	7 #7	3 #8	7 #6
A.C.S.R. OVER ARMOR ROD	#6		#6	#3
STEEL GUY WIRE	1/6	4/9	2/7	4/7
STEEL	#8 SOL.	#4-3 WIRE	#4-3 WIRE	
AMERDUCTOR TYPES SCP & SCB	#12	#2	#4	#2

© 2011, AFL, all rights reserved. PP-3-00492, Revision 2, 12.16.16
Specifications are subject to change without notice.

DOSSERT®

TYPE UM

Copper U-Bolt Variable Range Terminal

A U-bolt variable terminal lug for connecting cables to flat bar buses.

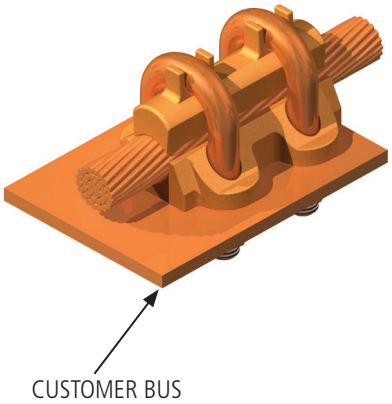

Material

Copper Alloy

Hardware

Everdur U-bolts, nuts and lockwashers

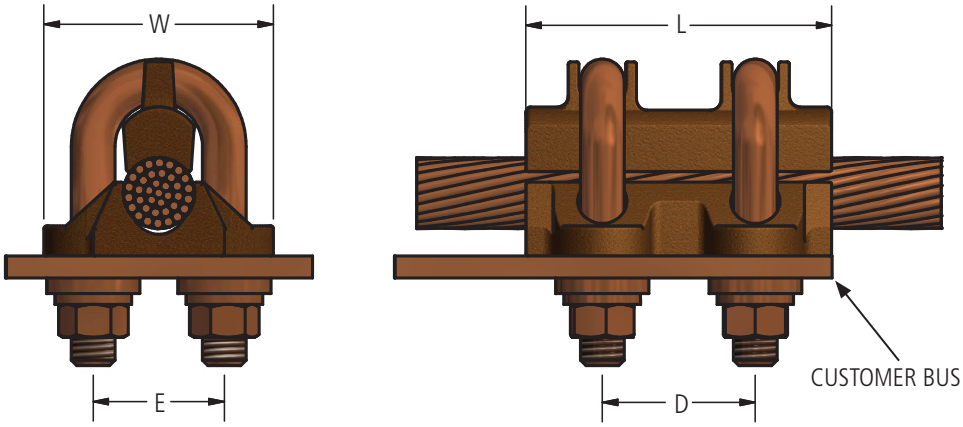

Ordering Information

CATALOG NUMBER	CABLE RANGE		DIMENSIONS IN INCHES				
	MIN	MAX	D	E	L	W	U-BOLT SIZE
UM13	#6	2/0 STR	1 1/4	13/16	2 1/2	1 3/16	5/16
UM21	#1	4/0 STR	1 1/4	31/32	2 5/8	1 7/8	3/8
UM30	1/0 STR	300 MCM	1 1/2	1 1/16	2 3/4	1 15/16	3/8
UM50	300 MCM	500 MCM	2 1/8	1 3/8	4 1/4	2 1/2	1/2
UM80	500 MCM	800 MCM	1 3/4	1 19/32	3 1/4	2 13/16	1/2
UM100	750 MCM	1000 MCM	1 13/16	1 23/32	3 1/2	2 15/16	1/2
UM150	1000 MCM	1500 MCM	2	2	4	3 3/16	1/2
UM200	1500 MCM	2000 MCM	2	2 1/4	4 1/2	3 3/8	1/2

© 2011, AFL, all rights reserved. PP-3-00503, Revision 1, 5.28.14
Specifications are subject to change without notice.

DOSSERT®

TYPE UP, UP-3

U-bolt Parallel Clamp

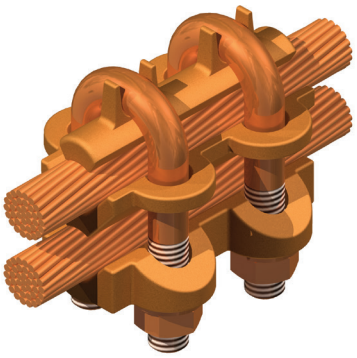

A U-bolt type connector for clamping two cable conductors in parallel. The high compressive action applied by the U-bolts acts directly and uniformly on the two conductors. The variability of each clamping section makes possible numerous combinations of cable.

Material

Copper Alloy

Hardware

Everdur U-bolts, nuts, and lockwashers.

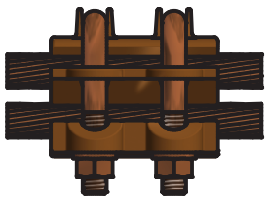

UP

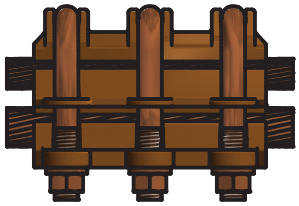

UP-3

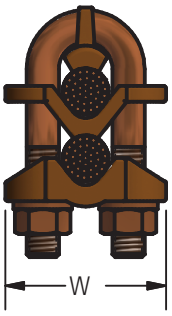

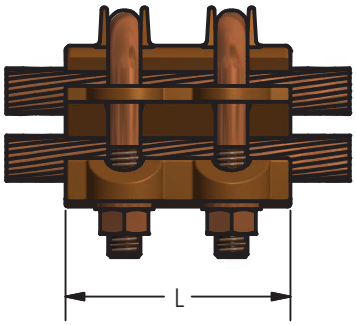

Ordering Information

CATALOG NUMBER		CABLE RANGE				DIMENSIONS IN INCHES		BOLT SIZE
		RUN		TAP				
UP	UP-3	MIN	MAX	MIN	MAX	L	W	
UP13-13	UP13-13-3	6 Str	2/0 Str	6 Str	2/0 Str	2 1/2	1 9/16	5/16
UP21-13	UP21-13-3	1 Str	4/0 Str	6 Str	2/0 Str	2 5/8	1 7/8	3/8
UP21-21	UP21-21-3	1 Str	4/0 Str	1 Str	4/0 Str	2 5/8	1 7/8	3/8
UP30-13	UP30-13-3	1/0 Str	300 kcmil	6 Str	2/0 Str	2 3/4	1 15/16	3/8
UP30-21	UP30-21-3	1/0 Str	300 kcmil	1 Str	4/0 Str	2 3/4	1 15/16	3/8
UP30-30	UP30-30-3	1/0 Str	300 kcmil	1/0 Str	300 kcmil	3 1/4	1 15/16	3/8
UP50-21	UP50-21-3	300 kcmil	500 kcmil	1 Str	4/0 Str	2 3/4	2 1/8	3/8
UP50-30	UP50-30-3	300 kcmil	500 kcmil	1/0 Str	300 kcmil	4 1/4	2 1/8	3/8
UP50-50	UP50-50-3	300 kcmil	500 kcmil	300 kcmil	500 kcmil	4 1/4	2 1/8	1/2
UP80-30	UP80-30-3	500 kcmil	800 kcmil	1/0 Str	300 kcmil	3 1/4	2 13/16	3/8
UP80-50	UP80-50-3	500 kcmil	800 kcmil	300 kcmil	500 kcmil	5 1/4	2 13/16	1/2
UP80-80	UP80-80-3	500 kcmil	800 kcmil	500 kcmil	800 kcmil	4 1/4	2 13/16	1/2
UP100-100	UP100-100-3	750 kcmil	1000 kcmil	750 kcmil	1000 kcmil	5 1/4	2 15/16	1/2
UP100-50	UP100-50-3	750 kcmil	1000 kcmil	300 kcmil	500 kcmil	4 1/4	2 15/16	1/2
UP100-80	UP100-80-3	750 kcmil	1000 kcmil	500 kcmil	800 kcmil	5 1/4	2 15/16	1/2
UP150-80	UP150-80-3	1000 kcmil	1500 kcmil	500 kcmil	800 kcmil	5 1/4	3 3/16	1/2
UP150-100	UP150-100-3	1000 kcmil	1500 kcmil	750 kcmil	1000 kcmil	5 1/4	3 3/16	1/2
UP150-150	UP150-150-3	1000 kcmil	1500 kcmil	1000 kcmil	1500 kcmil	5 1/4	3 3/16	1/2
UP200-80	UP200-80-3	1500 kcmil	2000 kcmil	500 kcmil	800 kcmil	5 1/4	3 3/8	1/2
UP200-100	UP200-100-3	1500 kcmil	2000 kcmil	750 kcmil	1000 kcmil	5 1/4	3 3/8	1/2
UP200-150	UP200-150-3	1500 kcmil	2000 kcmil	1000 kcmil	1500 kcmil	5 1/4	3 3/8	1/2
UP200-200	UP200-200-3	1500 kcmil	2000 kcmil	1500 kcmil	2000 kcmil	5 1/4	3 3/8	5/8

© 2011, AFL, all rights reserved. PP-3-00506, Revision 0, 2.24.11
Specifications are subject to change without notice.

DOSSERT®

TYPE WC

Cable Clip For Securing Ends Of Cable

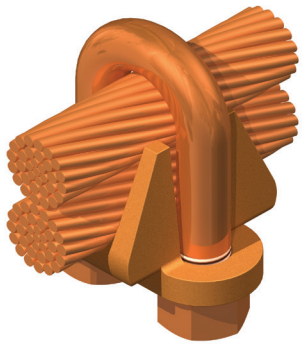

A high strength wire or cable clip for securing the ends of wire or cable conductors or grounds. Completely corrosion resistant.

Material

Copper Alloy

Hardware

Everdur U-bolts, nuts and lockwashers

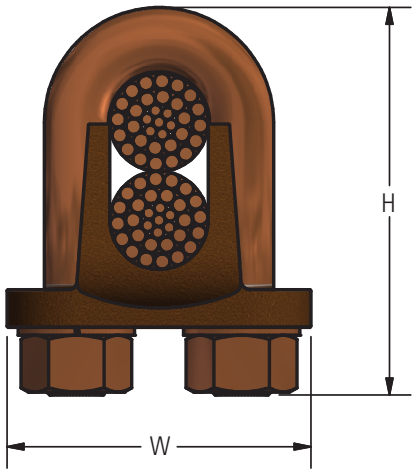

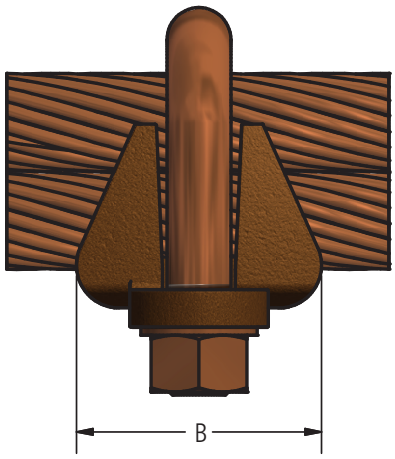

Ordering Information

CATALOG NUMBER	CABLE RANGE			DIMENSIONS IN INCHES			U-BOLT SIZE
	COPPER WIRE		GUY WIRE	B	H	W	
	MIN	MAX					
WC4	-	4 STR	1/4	1 1/4	1 5/8	1 3/4	3/8
WC6	-	3 STR	5/16	1 1/4	1 3/4	1 3/4	3/8
WC10	-	1/0 STR	3/8	1 1/4	2	1 3/4	1/2
WC13	-	2/0 STR	7/16	1 3/8	2 7/16	2 1/4	1/2
WC21	3/0 STR	4/0 STR	1/2	1 5/8	2 1/2	2 1/4	5/8
WC30	4/0 STR	300 MCM	5/8	1 5/8	3	2 5/16	5/8
WC40	350MCM	400 MCM	3/4	2	3 3/8	2 3/4	3/4
WC55	450MCM	550 MCM	7/8	2	3 5/8	2 7/8	3/4
WC75	600MCM	750MCM	1	2 1/2	4 3/8	3 3/8	3/4

© 2011, AFL, all rights reserved. PP-3-00520, Revision 0, 2.24.11
Specifications are subject to change without notice.

DOSSERT®
TYPE BS

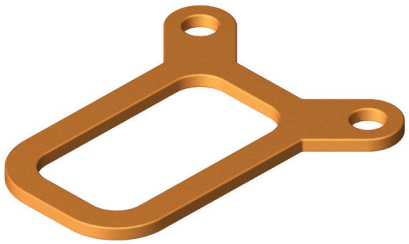

A bronze spacer for a standard bus bar spacing of 1/4 inch. Designed for use with both A and H clamps.

Material
Copper Alloy

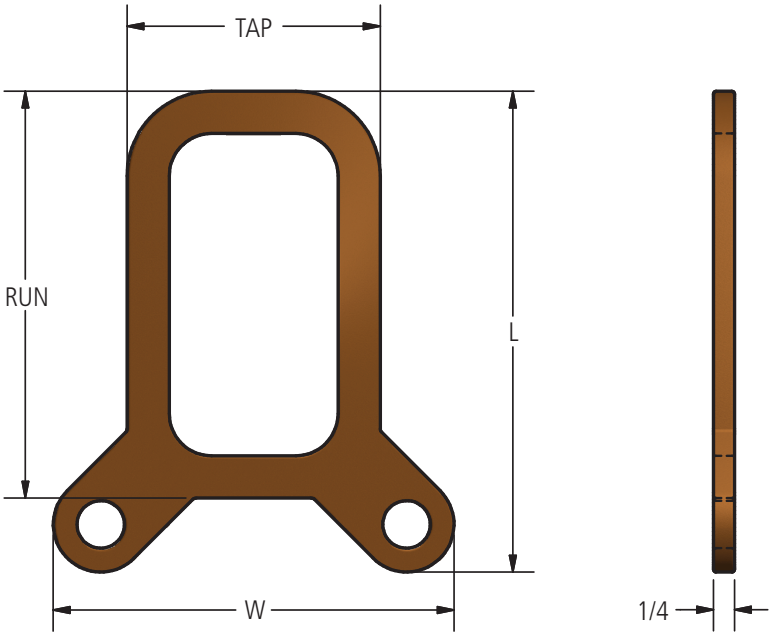

Ordering Information

CATALOG NUMBER	WIDTH OF BARS		DIMENSIONS IN INCHES		BOLT SIZE
	RUN	TAP	L	W	
BS11	1	1	1 5/8	2 5/16	3/8
BS21	2	1	2 5/8	2 5/16	3/8
BS22	2	2	2 5/8	3 5/16	3/8
BS31	3	1	3 5/8	2 5/16	3/8
BS32	3	2	3 5/8	3 5/16	3/8
BS33	3	3	3 5/8	4 5/16	3/8
BS42	4	2	4 5/8	3 5/16	3/8
BS43	4	3	4 3/4	4 3/4	1/2
BS44	4	4	4 3/4	5 3/4	1/2
BS52	5	2	5 3/4	3 5/8	1/2
BS53	5	3	5 3/4	4 3/4	1/2
BS54	5	4	5 3/4	5 3/4	1/2
BS55	5	5	5 7/8	7 1/8	5/8
BS62	6	2	6 3/4	3 5/8	1/2
BS63	6	3	6 3/4	4 3/4	1/2
BS64	6	4	6 3/4	5 3/4	1/2
BS65	6	5	6 7/8	7 1/8	5/8
BS66	6	6	6 7/8	8 1/8	5/8

© 2011, AFL, all rights reserved. PP-3-00257, Revision 0, 3.3.11
Specifications are subject to change without notice.

DOSSERT®

TYPE DH, DA

Copper Clamp For Flat Bus Bars DH is a four bolt design and DA is a three bolt design.

A clamp for developing high contact pressures between flat copper bus bars.This rugged connector may be used for coupling, crossing, aligning bus or tapping conductors.

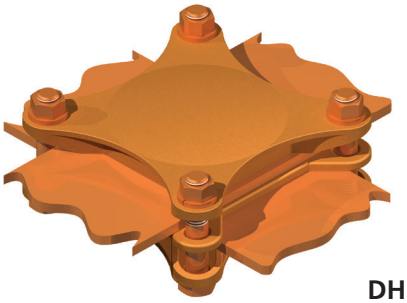

DH

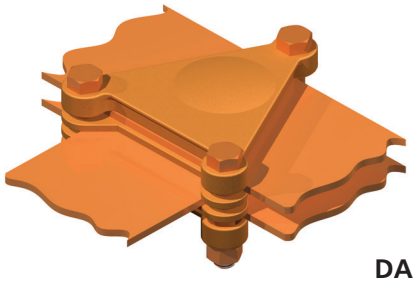

DA

Material

Copper Alloy

Hardware

Everdur bolts, nuts and lockwashers

Notes

For a 4" main and 4" tap with three bolt patern order DA44.

If more than two bars are used, add to the suffix "number of bars to be clamped." EX: DH11-3

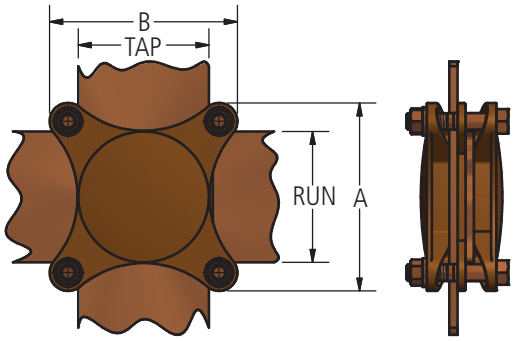

DH

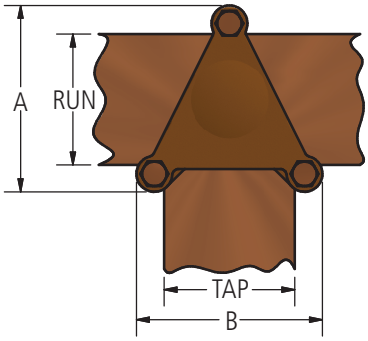

DA

Ordering Information

CATALOG NUMBER		FLAT BUS SIZE		DIMENSIONS IN INCHES		BOLT SIZE
		RUN	TAP	A	B	
DH11	DA11	1	1	2 5/16	2 5/16	3/8
DH21	DA21	2	1	3 5/16	3 5/16	3/8
DH22	DA22	2	2	3 5/16	3 5/16	3/8
DH31	DA31	3	1	4 5/16	2 5/16	3/8
DH32	DA32	3	2	4 5/16	3 5/16	3/8
DH33	DA33	8	3	4 5/16	4 5/16	3/8
DH42	DA42	4	2	5 5/16	3 5/16	3/8
DH43	DA43	4	3	5 3/4	4 3/4	1/2
DH44	DA44	4	4	5 3/4	5 3/4	1/2
DH52	DA52	5	2	6 3/4	3 3/4	1/2
DH53	DA53	5	3	6 3/4	4 3/4	1/2
DH54	DA54	5	4	6 3/4	5 3/4	1/2
DH55	DA55	5	5	7 1/8	7 1/8	5/8
DH62	DA62	6	2	7 3/4	3 3/4	1/2
DH63	DA63	6	3	7 3/4	4 3/4	1/2
DH64	DA64	6	4	7 3/4	5 3/4	1/2
DH65	DA65	6	5	8 1/8	7 1/8	5/8
DH66	DA66	6	6	8 1/8	8 1/8	5/8

© 2011, AFL, all rights reserved. PP-3-00310, Revision 1, 8.6.13
Specifications are subject to change without notice.

DOSSERT®

TYPE HAF, H2AF, H3AF, H4AF

Tee Connector For Tapping Flat Bar With Cable HAF connects one cable to flat bus bars, H2AF connects two cables to flat bus bars, H3AF connects three cables and H4AF connects four cables to flat bus bars.

A tee connector for tapping a flat bus with a cable. The clamp fitting enables the connector to be installed anywhere on the bus without the necessity for drilling holes for clamping bolts. The wide variation of the HERCULON™ fitting enables one connector.

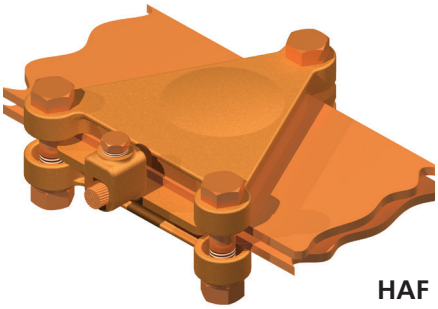

HAF

Material

Copper Alloy

Hardware

Everdur bolts, nuts and lockwashers

Note

- Above 500 MCM connectors have thicker pads and are mounted outside buses. See catalog number for spacer information. Unless otherwise specified spacer will not be supplied with connectors.
- For 4in wide bus bars and two 350kcmil cables order: H2AF35-4.
- For 4in wide bus bars and three 350kcmil cables order: H3AF35-4.
- For 4in wide bus bars and four 350kcmil cables order: H4AF35-4.

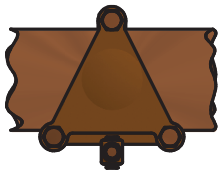

HAF

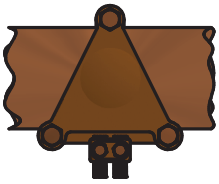

H2AF

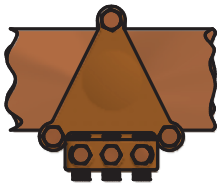

H3AF

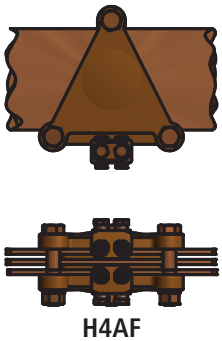

H4AF

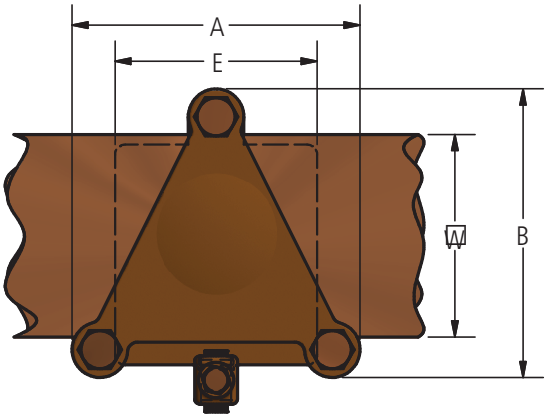

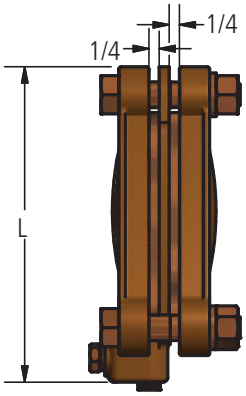

© 2011, AFL, all rights reserved. PP-3-00366, Revision 0, 3.3.11
Specifications are subject to change without notice.

DOSSERT®

TYPE HAF, H2AF, H3AF, H4AF

Tee Connector For Tapping Flat Bar With Cable HAF connects one cable to flat bus bars, H2AF connects two cables to flat bus bars, H3AF connects three cables and H4AF connects four cables to flat bus bars.

Ordering Information

CATALOG NUMBER	CABLE RANGE		WIDTH OF BARS (W)	DIMENSIONS IN INCHES				BOLT SIZE
	MIN	MAX		A	B	E	L	
HAF4-2	8 Solid	4 Solid	2	3 5/16	3 5/16	1	4 1/4	3/8
HAF8-2	4 Solid	1 Stranded	2	3 5/16	3 5/16	1	4 1/4	3/8
HAF13-2	1 Stranded	2/0 Stranded	2	3 5/16	3 5/16	1	4 3/8	3/8
HAF13-3	1 Stranded	2/0 Stranded	3	3 5/16	4 5/16	1	5 3/8	3/8
HAF21-2	2/0 Stranded	4/0 Stranded	2	3 5/16	3 5/16	1	4 7/16	3/8
HAF21-3	2/0 Stranded	4/0 Stranded	3	3 5/16	4 5/16	1	5 7/16	3/8
HAF30-2	4/0 Stranded	300 kcmil	2	3 5/16	3 5/16	2	4 5/8	3/8
HAF30-3	4/0 Stranded	300 kcmil	3	3 5/16	4 5/16	2	5 5/8	3/8
HAF35-2	250 kcmil	350 kcmil	2	3 5/16	3 5/16	2	4 5/8	3/8
HAF35-3	250 kcmil	350 kcmil	3	3 5/16	4 5/16	2	5 5/8	3/8
HAF35-4	250 kcmil	350 kcmil	2	3 5/16	5 5/16	2	6 5/8	3/8
HAF50-2	300 kcmil	500 kcmil	4	3 5/16	3 5/16	2	4 3/4	3/8
HAF50-3	300 kcmil	500 kcmil	3	3 5/16	4 5/16	2	5 3/4	3/8
HAF50-4	300 kcmil	500 kcmil	4	3 5/16	5 5/16	2	6 3/4	3/8
HAF75-2	500 kcmil	750 kcmil	2	3 5/16	3 5/16	2	4 7/8	3/8
HAF75-3	500 kcmil	750 kcmil	3	3 5/16	4 5/16	2	5 7/8	3/8
HAF75-4	500 kcmil	750 kcmil	4	3 5/16	5 5/16	2	7 1/4	3/8
HAF100-2	750 kcmil	1000 kcmil	2	3 5/16	3 5/16	2	5 5/16	3/8
HAF100-3	750 kcmil	1000 kcmil	3	4 5/16	4 5/16	3	6 5/16	3/8
HAF100-4	750 kcmil	1000 kcmil	4	4 3/4	5 3/4	3	7 11/16	1/2
HAF100-5	750 kcmil	1000 kcmil	5	4 3/4	6 3/4	3	8 11/16	1/2

© 2011, AFL, all rights reserved. PP-3-00366, Revision 0, 3.3.11
Specifications are subject to change without notice.

DOSSERT®

TYPE HHF, H2HF, H3HF, H4HF

Tee Connector For Tapping Flat Bar With Cable

HHF connects one cable to flat bus bars, H2HF connects two cables to flat bus bars, H3HF connects three cables and H4HF connects four cables to flat bus bars. A tee connector for tapping a flat bus with a cable. The clamp fitting enables the connector to be installed anywhere on the bus without the necessity for drilling holes for clamping bolts. The wide variation of the Herculon fitting enables one connector to accommodate a number of cable sizes. Connectors listed have 1/4 inch thick pads for 1/4 inch buses spaced 1/4 inch apart up to 600 MCM.

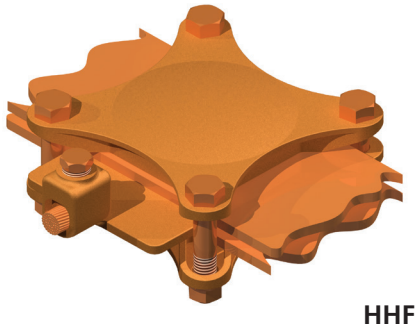

HHF

Material

Copper Alloy

Hardware

Everdur bolts, nuts and lockwashers

Notes

- For 4 in. wide bus bars and two 350 kcmil cables, order: H2HF35-4.
- For 4 in. wide bus bars and three 350 kcmil cables, order: H3HF35-4.
- For 4 in. wide bus bars and four 350 kcmil cables, order: H4HF35-4.

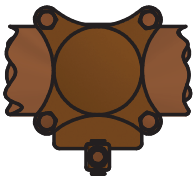

HHF

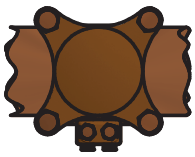

H2HF

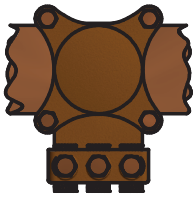

H3HF

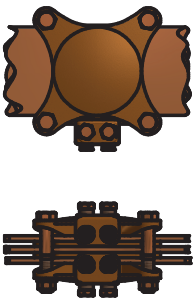

H4HF

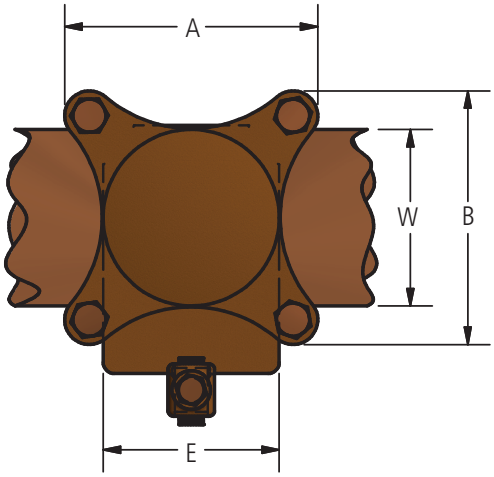

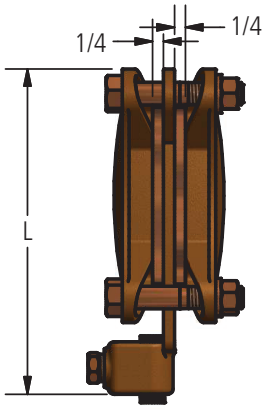

© 2011, AFL, all rights reserved. PP-3-00368, Revision 3, 5.24.18
Specifications are subject to change without notice.

DOSSERT®

TYPE HHF, H2HF, H3HF, H4HF

Tee Connector For Tapping Flat Bar With Cable

HHF connects one cable to flat bus bars, H2HF connects two cables to flat bus bars, H3HF connects three cables and H4HF connects four cables to flat bus bars.

Ordering Information

CATALOG NUMBER	CABLE RANGE		WIDTH OF BARS (W)	CABLE RANGE (DIA.)		DIMENSIONS IN INCHES				BOLT SIZE
	MIN	MAX		FROM	TO	A	B	E	L	
HHF4-2	8 Soild	4 Solid	2	0.128	0.204	3 5/16	3 5/16	1	4 1/4	3/8
HHF4-3	8 Soild	4 Solid	3	0.128	0.204	4 5/16	4 5/16	3	5 3/16	3/8
HHF8-2	4 Solid	1 Stranded	2	0.204	0.332	3 5/16	3 5/16	1	4 1/4	3/8
HHF13-2	1 Stranded	2/0 Stranded	2	0.332	0.419	3 5/16	3 5/16	1	4 3/8	3/8
HHF13-3	1 Stranded	2/0 Stranded	3	0.332	0.419	3 5/16	4 5/16	1	5 3/8	3/8
HHF21-2	2/0 Stranded	4/0 Stranded	2	0.419	0.528	3 5/16	3 5/16	1	4 7/16	3/8
HHF21-3	2/0 Stranded	4/0 Stranded	3	0.419	0.628	3 5/16	4 5/16	1	5 7/16	3/8
HHF30-2	4/0 Stranded	300 kcmil	2	0.528	0.628	3 5/16	3 5/16	2	4 5/8	3/8
HHF30-3	4/0 Stranded	300 kcmil	3	0.528	0.628	3 5/16	4 5/16	2	5 5/8	3/8
HHF35-2	250 kcmil	350 kcmil	2	0.575	0.681	3 5/16	3 5/16	2	4 5/8	3/8
HHF35-3	250 kcmil	350 kcmil	3	0.575	0.681	3 5/16	4 5/16	2	5 5/8	3/8
HHF35-4	250 kcmil	350 kcmil	4	0.575	0.681	3 5/16	5 5/16	2	6 5/8	1/2
HHF50-2	300 kcmil	500 kcmil	2	0.63	0.814	3 5/16	3 5/16	2	4 3/4	3/8
HHF50-3	300 kcmil	500 kcmil	3	0.63	0.814	3 5/16	4 5/16	2	5 3/4	3/8
HHF50-4	300 kcmil	500 kcmil	4	0.63	0.814	3 5/16	5 5/16	2	6 3/4	1/2
HHF50-5	300 kcmil	500 kcmil	5	0.63	0.814	3 3/4	6 3/4	2	8 1/8	1/2
HHF75-2	500 kcmil	750 kcmil	2	0.814	0.998	3 5/16	3 5/16	2	4 7/8	3/8
HHF75-3	500 kcmil	750 kcmil	3	0.814	0.998	3 5/16	4 5/16	2	5 7/8	3/8
HHF75-4	500 kcmil	750 kcmil	4	0.814	0.998	3 5/16	5 5/16	2	7 1/4	1/2
HHF100-2	750 kcmil	1000 kcmil	2	0.998	1.152	3 5/16	3 5/16	2	5 5/16	3/8
HHF100-3	750 kcmil	1000 kcmil	3	0.998	1.152	4 5/16	4 5/16	3	6 5/16	3/8
HHF100-4	750 kcmil	1000 kcmil	4	0.998	1.152	4 3/4	5 3/4	3	7 11/16	1/2
HHF100-5	750 kcmil	1000 kcmil	5	0.998	1.152	4 3/4	6 3/4	3	8 11/16	1/2

© 2011, AFL, all rights reserved. PP-3-00368, Revision 3, 5.24.18
Specifications are subject to change without notice.

DOSSERT®

TYPE HSS

Low Mount Horizontal Bus Support

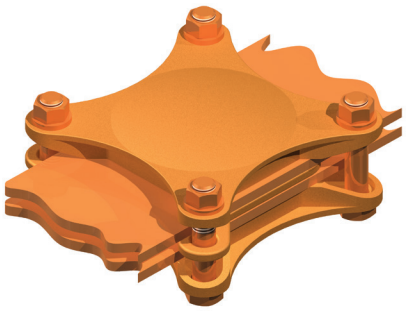

A low mount horizontal bus support for mounting flat bar to the cap or base of an insulator. For cap mounting cap screws are furnished and for base mounting bolts and nuts are furnished. Unless otherwise specified, clamps are supplied for cap mounting.

Material

Copper Alloy

Everdur bolts, nuts and lockwashers

Mounting hardware galvanized steel

Hardware

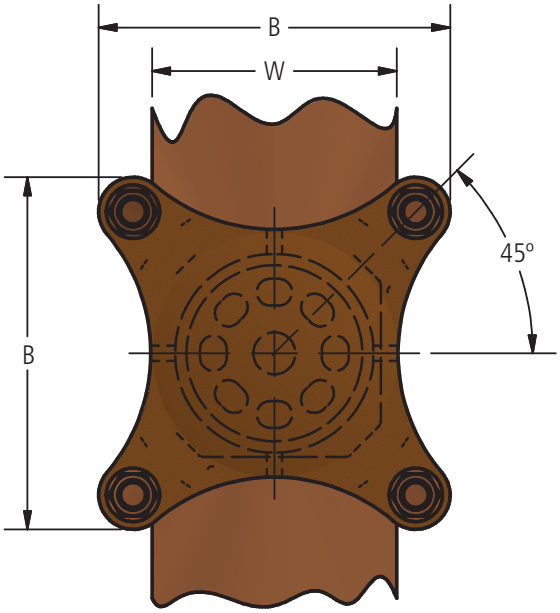

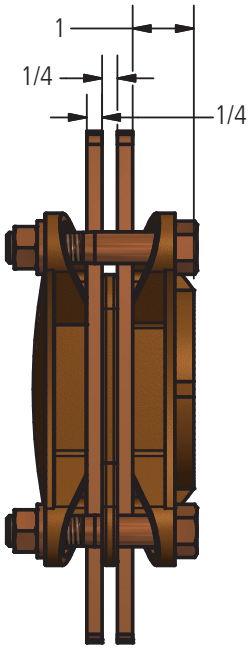

Ordering Information

CATALOG NUMBER	DIMENSIONS IN INCHES			BOLT SIZE
	WIDTH IN BARS (W)	BOLT CIRCLE	B	
HSS2-3	2	3	3-5/16	3/8
HSS2-5	2	5	3-5/16	3/8
HSS3-3	3	3	4-5/16	3/8
HSS3-5	3	5	4-5/16	3/8
HSS4-3	4	3	5-3/4	1/2
HSS4-5	4	5	5-3/4	1/2
HSS5-3	5	3	7-1/8	5/8
HSS5-5	5	5	7-1/8	5/8
HSS6-3	6	3	8-1/8	5/8
HSS6-5	6	5	8-1/8	5/8

© 2011, AFL, all rights reserved. PP-3-00378, Revision 0, 3.3.11
Specifications are subject to change without notice.

DOSSERT®

TYPE EB
Everdur Bolts

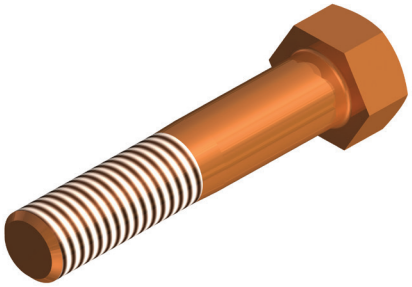

Dossert Everdur Machine bolts are cold headed and roll threaded They exhibit tensile strengths equal to or greater than mild steels. Their high resistance to corrosion and non-magnetic properties make them extremely useful in electrical work.

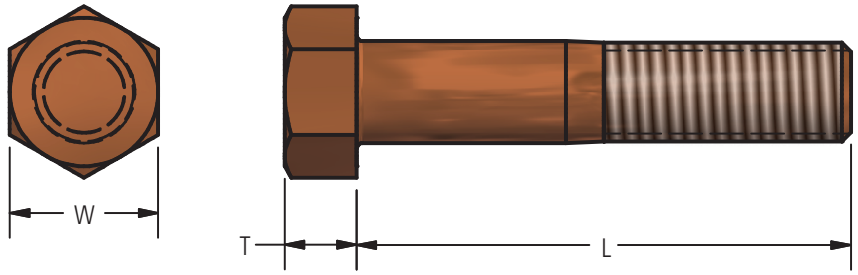

Ordering Information

BOLT DIAMETER AND THREADS PER INCH						
L IN INCHES	1/4 - 20	5/16 - 18	3/8 - 16	1/2 - 13	5/8 - 11	3/4 - 10
1/2	EB2550	EB3150	EB3750	EB5050	–	–
5/8	EB2562	EB3162	EB3762	EB5062	–	–
3/4	EB2575	EB3175	EB3775	EB5075	–	–
7/8	EB2587	EB3187	EB3787	EB5087	–	–
1	EB25100	EB31100	EB37100	EB50100	EB62100	–
1 1/4	EB25125	EB31125	EB37125	EB50125	EB62125	EB75125
1 1/2	EB25150	EB31150	EB37150	EB50150	EB62150	EB75150
1 3/4	EB25175	EB31175	EB37175	EB50175	EB62175	EB75175
2	EB25200	EB31200	EB37200	EB50200	EB62200	EB75200
2 1/4	EB25225	EB31225	EB37225	EB50225	EB62225	EB75225
2 1/2	EB25250	EB31250	EB37250	EB50250	EB62250	EB75250
2 3/4	EB25275	EB31275	EB37275	EB50275	EB62275	EB75275
3	EB25300	EB31300	EB37300	EB50300	EB62300	EB75300
3 1/4	EB25325	EB31325	EB37325	EB50325	EB62325	EB75325
3 1/2	EB25350	EB31350	EB37350	EB50350	EB62350	EB75350
4	EB25400	EB31400	EB37400	EB50400	EB62400	EB75400
4 1/2	–	EB31450	EB37450	EB50450	EB62450	EB75450
5	–	–	EB37500	EB50500	EB62500	EB75500
5 1/2	–	–	EB37550	EB50550	EB62550	EB75550
6	–	–	EB37600	EB50600	EB62600	EB75600
W	3/8	1/2	9/16	3/4	15/16	1 1/8
T	5/32	3/16	15/64	19/64	25/64	15/32

© 2011, AFL, all rights reserved. PP-3-00325, Revision 0, 3.3.11
Specifications are subject to change without notice.

DOSSERT®

TYPE EN, EW, ELW, EILW

Everdur Nuts, Spring Washer, and Flat Washer

Dossert Everdur nuts, EN, are made to the American Standard National course thread Class 2 Semifinished, cold punched. Dossert Everdur spring type lockwasher, ELW, is a tough and durable unit which prevents the loosening of the nut under severe conditions of vibration. Dossert Everdur flat washers, EW, are stamped from cold drawn Everdur sheet and are tumbled to a smooth finish with rounded edges. Dossert Everdur internal lock washer EILW.

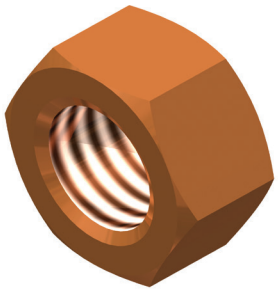

EN

Material

Everdur

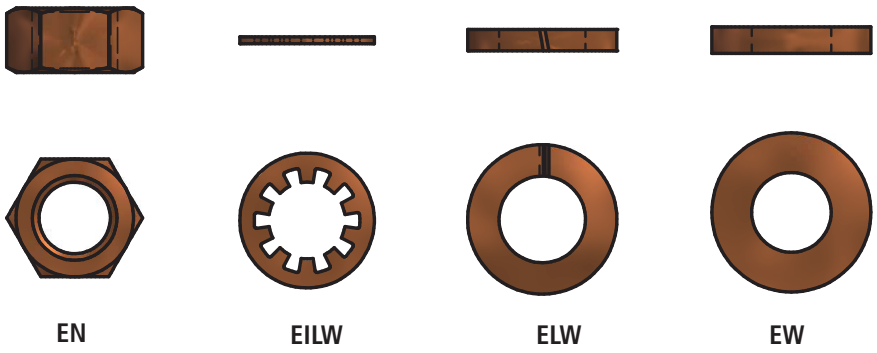

EN EILW ELW EW

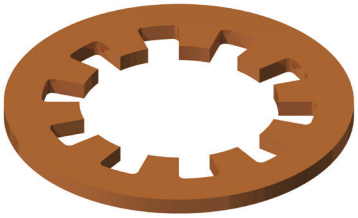

EILW

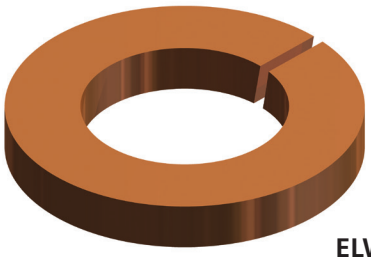

ELW

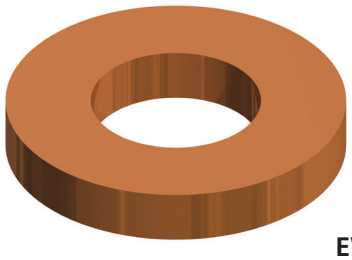

EW

Ordering Information

TYPE EN				
CATALOG NUMBER	DIAMETER OF THREADS	THREADS PER INCH	WIDTH ACROSS FLATS	THICKNESS
EN25	1/2	20	7/6	13/64
EN31	5/16	18	9/16	1/4
EN37	3/8	16	5/8	5/16
EN50	1/2	13	13/16	27/64
EN62	5/8	11	1	17/32
EILW75	3/ 4	.102	1 7/8	

TYPE EILW			
CATALOG NUMBER	BOLT SIZE	THICKNESS	MAJOR DIAMETER
EILW25	1/4	.040	11/16
EILW31	5/16	.064	7/8
EILW37	3/8	.064	1
EILW50	1/2	.091	1 1/4
EILW62	5/8	.091	1 1/2
EILW75	3/ 4	.102	1 7/8

TYPE ELW	
CATALOG NUMBER	BOLT SIZE
ELW25	1/4
ELW31	5/16
ELW37	3/8
ELW50	1/2
ELW62	5/8
ELW75	3/ 4

TYPE EW		
CATALOG NUMBER	BOLT SIZE	THICKNESS
EW25	1/4	1/16
EW31	5/16	1/16
EW37	3/8	3/32
EW50	1/2	1/8
EW62	5/8	5/32
EW75	3/ 4	3/16

© 2011, AFL, all rights reserved. PP-3-00326, Revision 0, 3.3.11
Specifications are subject to change without notice.

DOSSERT®
TYPE G110, G111, G114, G115

All Dossert ground clamps are made of a high copper alloy and are equipped with silicon bronze bolts. These connectors are characterized by their high resistance to corrosion which makes them suitable for burial underground without danger of joint deterioration

Two types of two conductor ground clamps for grounding to square fence post, type G114 or for gounding to H beam column or fence post, type G115.

Two single conductor ground clamps for connecting a ground wire to the web of an H beam type fence post. Type G111 provides a clamping saddle between wire and post, while type G110 clamps wire directly to post.

Material
Copper Alloy

Hardware
Everdur bolts, nuts and lockwashers

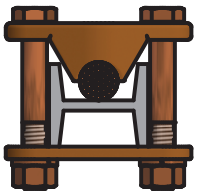
G110

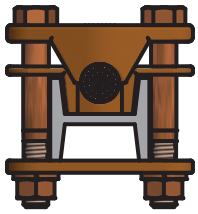
G111

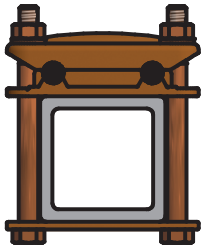
G114-2

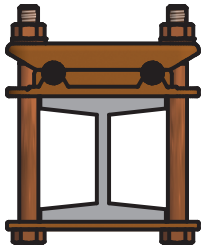
G115-2

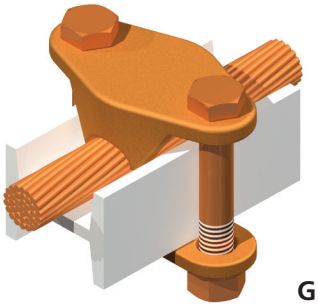
G110

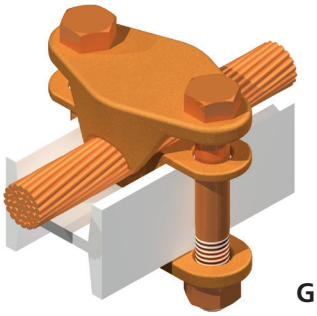
G111

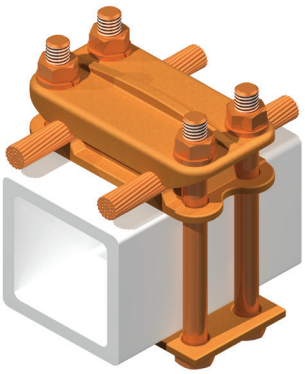
G114

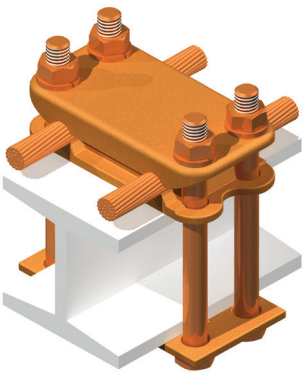
G115

Ordering Information

CATALOG NUMBER	H-BEAM	CABLE RANGE	
		MIN	MAX
G110	1 1/4 X 1 1/2	2/0 SOL	250 MCM
G111	1 1/4 X 1 1/2	2/0 SOL	250 MCM

CATALOG NUMBER	SQUARE POST SIZE	CABLE RANGE		NUMBER OF CABLES
		MIN	MAX	
G114	3 1/2"	1/0	250MCM	3
G114-13-2	2"	4 SOL.	2/0 STR.	1
G114-2-S1	1 1/2"	2/0 SOL.	250 MCM	2
G114-13-2-50	2"	200 MCM	500 MCM	1

CATALOG NUMBER	BEAM SIZE	CABLE RANGE		NUMBER OF CABLES
		MIN	MAX	
G115	2 15/16 x 3	2/0 SOL.	250 MCM	3
G115-1	2 1/8 x 2 1/2	4 SOL.	2/0 STR.	1
G115-2	1 15/16 x 2 1/4	2/0 SOL.	250 MCM	2

© 2011, AFL, all rights reserved. PP-3-00333, Revision 1, 9.8.15
Specifications are subject to change without notice.

DOSSERT®

TYPE GA, GAA

Two Conductor Flat Bar Ground Clamp

A single or double bolt ground clamp for clamping two wires or cables to a flat bar,plate, or structural memeber. Permits a slight range of variablility in accomadating different size conductors. Bolts are retained by body to enable assembling with only one wrench. Bolts are supplied to clamp a 1/4 inch bar. GAA is similar to GA except that it is designed for heavier service.

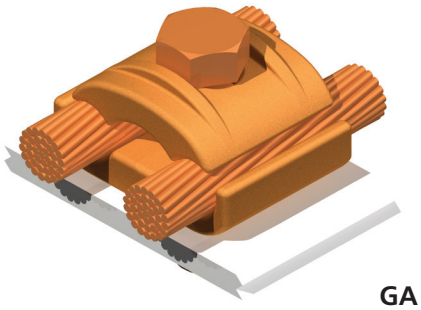

GA

Material

Copper Alloy

Hardware

Everdur bolts, nuts and lockwashers

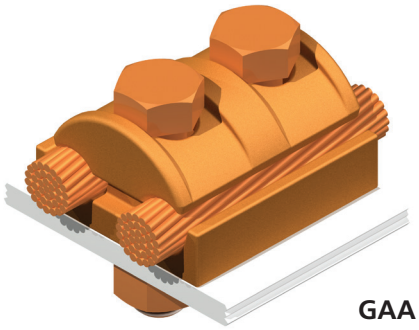

GAA

Notes

- Bolt length supplied to clamp a 1/4 inch bar with maximum conductor in place.
- For thicker bars, longer bolts will be furnished upon request.
- For tin plating, add suffix "-SN" to catalog number EX: GA13-SN
- For galvanized steel hardware, add suffix "-GS" to catalog number EX: GA13-GS
- For stainless steel hardware, add suffix "-SS" to catalog number EX: GA13-SS

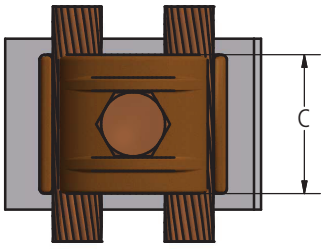

GA

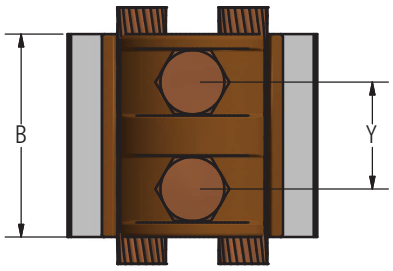

GAA

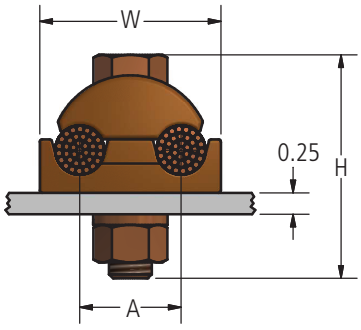

Ordering Information

CATALOG NUMBER		CABLE RANGE		DIMENSIONS IN INCHES						BOLT SIZE
GA	GAA	MIN	MAX	A	B	C	H	W	Y	
GA4	GAA4	8 SOL	4 STR	0.75	2.00	1.38	1.38	1.25	0.94	3/8
GA13	GAA13	4 SOL	2/0 STR	1.00	2.00	1.53	1.70	1.72	1.00	3/8
GA25	GAA25	2/0 SOL	250 MCM	1.31	2.50	1.63	2.25	2.25	1.25	1/2
GA25-S	GAA25-S	2/0 SOL	250 MCM	1.25	2.94	1.75	2.25	2.25	1.75	1/2
GA50	GAA50	300 MCM	500 MCM	1.50	2.50	2.00	2.86	2.63	1.38	1/2
GA50-N	GAA50-N	300 MCM	500 MCM	1.50	2.50	2.00	2.86	2.63	1.38	1/2
GA75	GAA75	550 MCM	750 MCM	1.75	3.00	2.38	3.00	3.25	1.56	5/8
GA80-1/2	GAA80-1/2	500 MCM	800 MCM	1.88	3.00	2.38	3.00	3.31	1.56	1/2
GA100	GAA100	800 MCM	1000 MCM	2.00	3.00	2.50	3.25	3.63	1.56	5/8

© 2011, AFL, all rights reserved. PP-3-00334, Revision 2, 11.9.18
Specifications are subject to change without notice.

DOSSERT®

TYPE GAM

Copper Grounding Connector For Two Cables To A Flat Surface

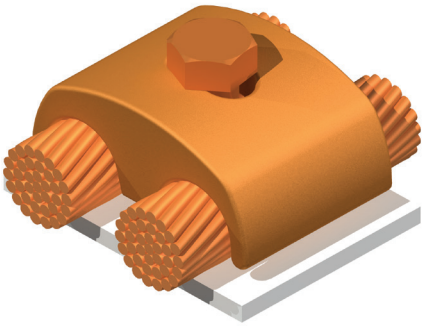

A single bolt, one piece ground clamp for clamping two wires or cables to a flat bar, plate, or structural member. Permits a slight range of variability in accommodating different size conductors. Bolts are retained by body to enable assembling with only one wrench. Bolts are supplied to clamp a 1/4 Inch bar.

Material

Copper Alloy

Hardware

Everdur bolts, nuts and lockwashers

Note

- Bolt length supplied to clamp a 1/4 inch bar with maximum conductor in place. For thicker bars, longer bolts will be furnished upon request.
- For tin plating add suffix "-SN" to end of catalog number. Example: GAM13-SN
- For a galvanized steel bolt add suffix "-GS" to end of catalog number. Example: GAM13-GS

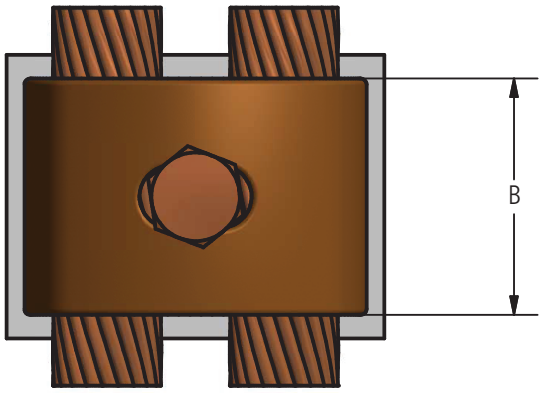

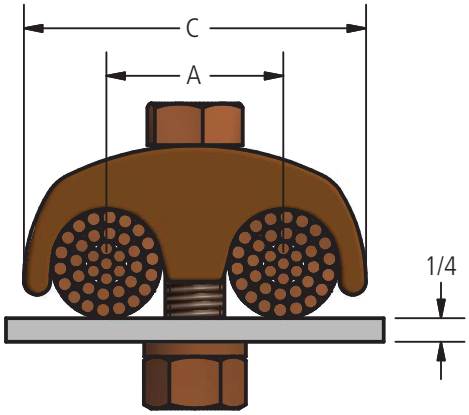

Ordering Information

CATALOG NUMBER	GROUNDING		DIMENSIONS IN INCHES			BOLT SIZE
	MIN	MAX	A	B	C	
GAM4	8 Solid	4 Stranded	3/4	1 1/4	1 1/8	3/8
GAM13	4 Solid	2/0 Stranded	1	1 1/2	1 1/2	3/8
GAM25	2/0 Solid	250 MCM	1 1/4	1 3/4	2 1/8	1/2
GAM50	300 MCM	500 MCM	1 1/2	2	2 5/8	1/2
GAM75	550 MCM	750 MCM	1 3/4	2 1/4	3 1/8	5/8
GAM100	800 MCM	1000 MCM	1 7/8	2 1/2	3 1/2	5/8

© 2011, AFL, all rights reserved. PP-3-00336, Revision 0, 3.8.11
Specifications are subject to change without notice.

DOSSERT®

TYPE GB, GBB

Copper Grounding Connector for Three Cables to a Flat Surface.

GB style is a two bolt design and GBB is a four bolt design. These clamps are used for clamping three cables of equal size to a flat bar, plate, or structural member. Bolts are retained by body to enable assembling with only one wrench. Bolts are supplied to clamp a 1/4 inch bar.

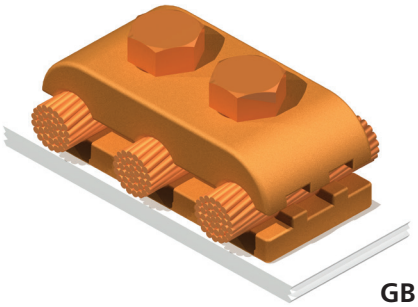

GB

Material

Copper Alloy

Hardware

Everdur bolts, nuts and lockwashers

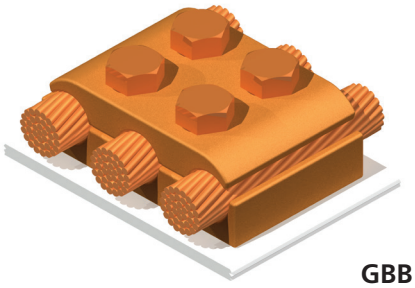

GBB

Note

- Bolt length supplied to clamp a 1/4 inch bar with maximum conductor in place.
- For thickerbars, longer bolts will be furnished upon request.For tin plating add suffix (SN) to catalog number. Example: For a 4 solid conductor, 2 bolt clamp, and tin plating, order: GB13-SN
- For a galvanized steel bolt add suffix (GS) to catalog number. Example: For a 4 solid conductor, 4 bolt clam, and galvanized steel bolts, order: GBB13-GS

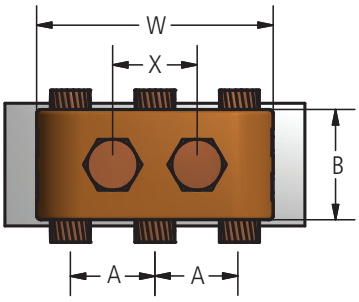

GB

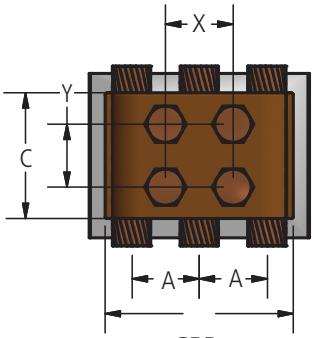

GBB

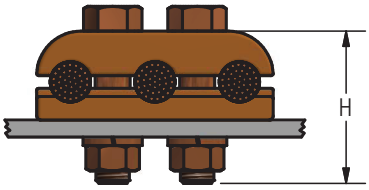

Ordering Information

CATALOG NUMBER		CABLE RANGE		DIMENSIONS IN INCHES							BOLT SIZE
GB	GBB	MIN	MAX	A	B	C	H	W	X	Y	
GB4	GBB4	8 Solid	4 Stranded	7/8	1 1/2	2	1 5/8	2 1/8	7/8	7/8	3/8
GB13	GBB13	4 Solid	2/0 Str	1	1 3/4	2 1/8	1 3/4	1 3/4	1	1	3/8
GB25	GBB25	2/0 Solid	250 MCM	1 1/4	1 5/8	2 5/8	2 1/2	3 1/2	1 1/4	1 1/4	1/2
GB50	GBB50	300 MCM	500 MCM	1 1/2	2 1/4	2 5/8	2 1/2	4 1/4	1 1/2	1 1/4	1/2
GB75	GBB75	550 MCM	750 MCM	1 13/16	2 1/2	3 1/4	2 3/4	5	1 13/16	1 1/2	5/8
GB100	GBB100	800 MCM	1000 MCM	2	2 3/4	3 1/4	3	5 1/2	2	1 1/2	5/8

© 2011, AFL, all rights reserved. PP-3-00337, Revision 1, 1.25.2022
Specifications are subject to change without notice.

DOSSERT®

TYPE GCF, GCG

Ground Connector For Rotating Pipe To A Flat Surface

A flexible ground connector for grounding a rotating pipe or rod to a flat surface. Finds wide application in grounding switch operating pipes and fence gates.

TYPE GCG modification is for grounding one pipe or rod to another.

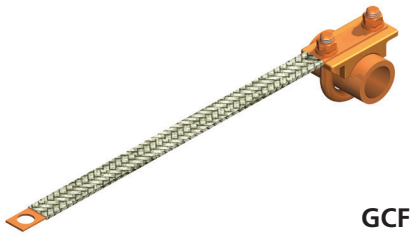

GCF

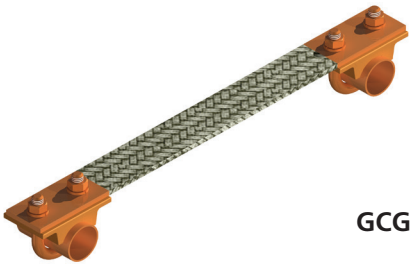

GCG

Material

- Copper Alloy
- Braid is tin plated copper wire, terminated at each end by a non-plated pad.

Hardware

Everdur bolts, nuts and lockwashers

Note

Braid may be custom made for any configuration of length, pad size or hole diameter.



GCG

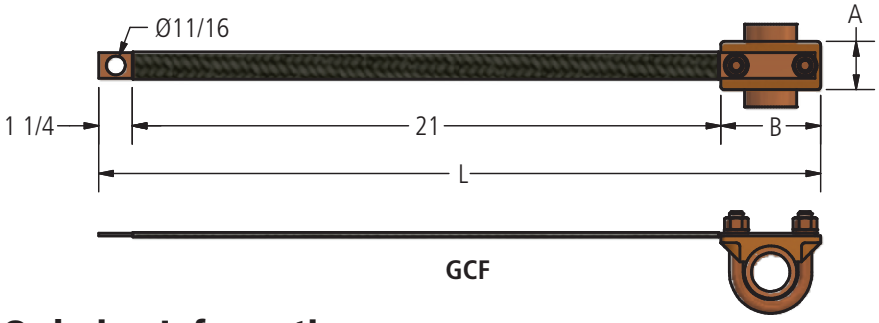

GCF

Ordering Information

CATALOG NUMBER	GROUNDING SPS	AMP CAPACITY OF BRAID	DIMENSIONS IN INCHES			BOLT SIZE
			A	B	L	
GCF75-771	3/4	180	1	2 11/16	24 15/16	3/8
GCF75-2301	3/4	350	1 1/2	2 11/16	24 15/16	3/8
GCF75-3021	3/4	410	1 1/2	2 11/16	24 15/16	3/8
GCF100-771	1	180	1	2 15/16	25 3/16	3/8
GCF100-2301	1	350	1 1/2	2 15/16	25 3/16	3/8
GCF100-3021	1	410	1 1/2	2 15/16	25 3/16	3/8
GCF125-771	1 1/4	180	1	3 1/4	25 1/2	3/8
GCF125-2301	1 1/4	350	1 1/2	3 1/4	25 1/2	3/8
GCF125-3021	1 1/4	410	1 1/2	3 1/4	25 1/2	3/8
GCF150-771	1 1/2	180	1	3 1/2	25 3/4	3/8
GCF150-2301	1 1/2	350	1 1/2	3 1/2	25 3/4	3/8
GCF150-3021	1 1/2	410	1 1/2	3 1/2	25 3/4	3/8
GCF200-771	2	180	1	4	26 1/4	3/8
GCF200-2301	2	350	1 1/2	4	26 1/4	3/8
GCF200-3021	2	410	1 1/2	4	26 1/4	3/8
GCF250-771	2 1/2	180	1	4 1/2	26 3/4	3/8
GCF250-2301	2 1/2	350	1 1/2	4 1/2	26 3/4	3/8
GCF250-3021	2 1/2	410	1 1/2	4 1/2	26 3/4	3/8

© 2011, AFL, all rights reserved. PP-3-00338, Revision 2, 8.2.13
Specifications are subject to change without notice.

DOSSERT®

TYPE GD

Grounding Connector For Flat Bar to Pipe Or Rod

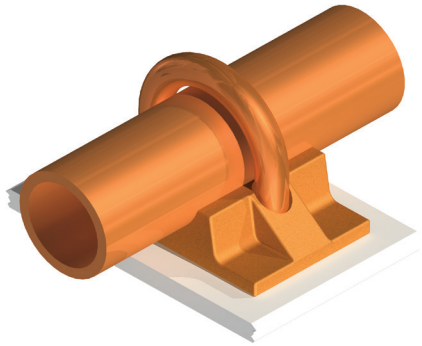

A ground connector for securing a flat bar to a grounding rod or pipe. The flat bar may be assembled in a horizontal or vertical position. Connector can accommodate any thickness of bar.

Material

Copper Alloy

Hardware

Everdur U-bolts, nuts and lockwashers

Note

Where bars to be used will exceed 1/4 inch please contact the Factory due to the necessity of larger U-Bolts.

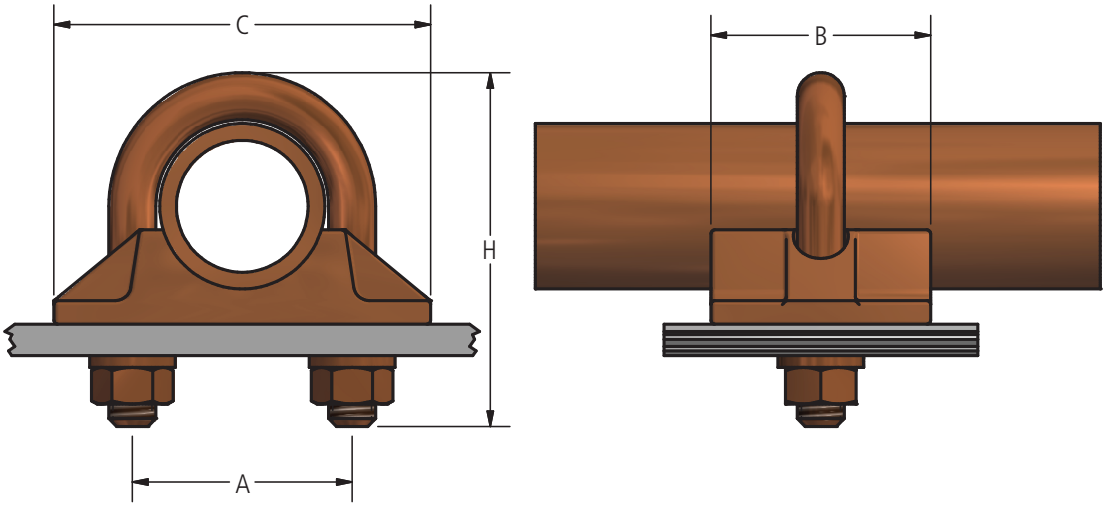

Ordering Information

CATALOG NUMBER	GROUNDING		DIMENSIONS IN INCHES				BOLT SIZE
	PIPE SPS	ROD	A	B	C	H	
GD25	1/4	1/2	1	1 1/4	1 7/8	1 3/4	3/8
GD38	3/8	5/8 or 3/4	1 1/8	1 1/4	2	1 7/8	3/8
GD75	1/2 or 3/4	7/8 or 1	1 1/2	1 1/2	2 1/2	2 5/16	3/8
GD100	1	-	1 3/4	1 3/4	2 3/4	2 9/16	3/8
GD125	1 1/4	-	2 1/8	1 3/4	3 1/8	3	3/8
GD150	1 1/2	-	2 3/8	2	3 3/8	3 1/4	3/8
GD200	2	-	2 13/16	2	3 7/8	3 3/4	3/8
GD250	2 1/2	-	3 5/16	2 1/2	4 3/8	4 1/4	3/8
GD300	3	-	4 1/8	2 1/2	5 3/16	5 1/8	1/2
GD350	3 1/2	-	4 5/8	2 3/4	5 3/4	5 9/16	1/2
GD400	4	-	5 1/8	2 3/4	6 1/4	6 3/16	1/2

© 2011, AFL, all rights reserved. PP-3-00340, Revision 0, 3.3.11
Specifications are subject to change without notice.

DOSSERT®

TYPE GF, GFM

Copper Grounding Connector for Cable to a Flat Surface

A ground clamp for grounding a cable or wire to a flat bar, plate or flat structural steel member. The bolt is retained by the body to enable assembly with only one wrench. GFM comes without the base.

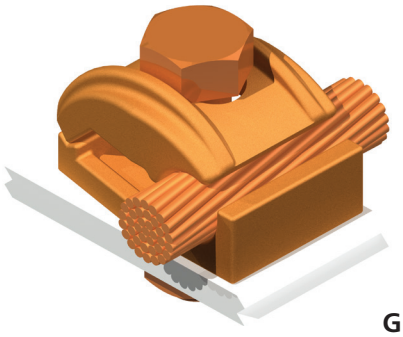

GF

Material

Copper Alloy

Hardware

Everdur bolts, nuts and lockwashers

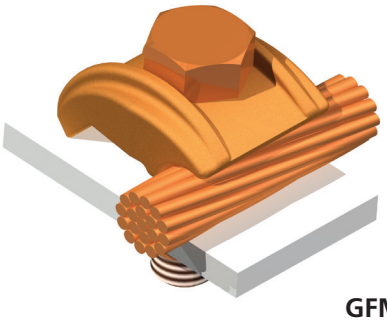

GFM

Notes

- Bolt length supplied to clamp a 1/4" bar with maximum conductor in place. For thicker bars, longer bolts will be furnished upon request.
- For tin plating add suffix "-SN" to end of catalog number. Example: GF13-SN
- For a 300 mcm conductor and one piece assembly, order GFM50.
- For Galvanized Steel Hardware, add "-GS" to catalog number. EX: GF13-GS
- For Stainless Steel Hardware, add "-SS" to catalog number. EX: GF13-SS

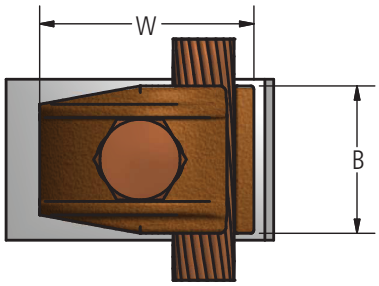

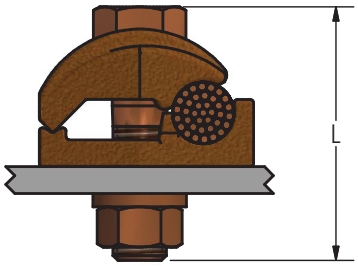

GF

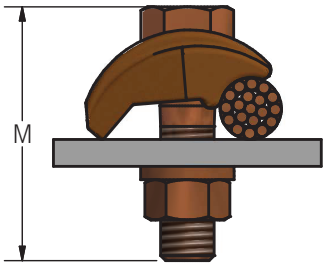

GFM

Ordering Information

CATALOG NUMBER		CABLE RANGE		DIMENSIONS IN INCHES				BOLT SIZE
GF	GFM	MIN	MAX	B	L	M	W	
GF4	GFM4	8 Solid	4 Stranded	1	1 15/16	1 7/16	1 7/16	3/8
GF13	GFM13	4 Solid	2/0 Stranded	1 1/8	1 15/16	1 11/16	1 9/16	3/8
GF25	GFM25	2/0 Solid	250 MCM	1 3/8	2 1/4	2	2	1/2
GF30	GFM30	4 Solid	300 MCM	1 3/8	2 5/8	2 1/8	2	1/2
GF50	GFM50	300 MCM	500 MCM	1 1/2	2 7/8	2 1/4	2 7/16	1/2
GF75	GFM75	550 MCM	750 MCM	1 5/8	3 1/4	2 3/4	2 7/8	5/8
GF100	GFM100	800 MCM	1000 MCM	1 3/4	3 1/2	3 1/4	3 3/16	5/8

© 2011, AFL, all rights reserved. PP-3-00343, Revision 3, 11.9.18
Specifications are subject to change without notice.

DOSSERT®

TYPE GG

Copper Grouund Connector For Crossing Two Cables Or Ground Rod

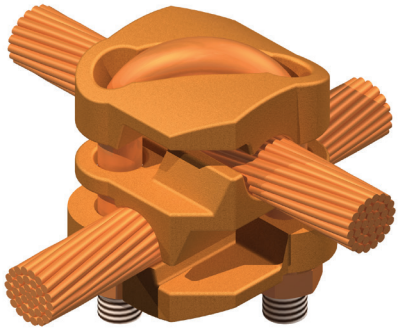

A ground connector for crossing two wires or cables or for securing a cable or wire to a ground rod. Can also be used for equalizing over head cables and wire. Its high resistance to corrosion enables this connector to be buried in the ground after a connection is made.

Material

Copper Alloy

Hardware

Everdur U-bolts, nuts and lockwashers

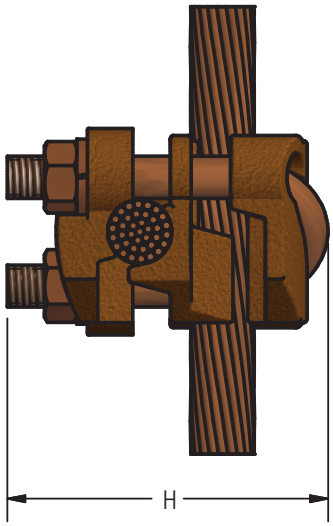

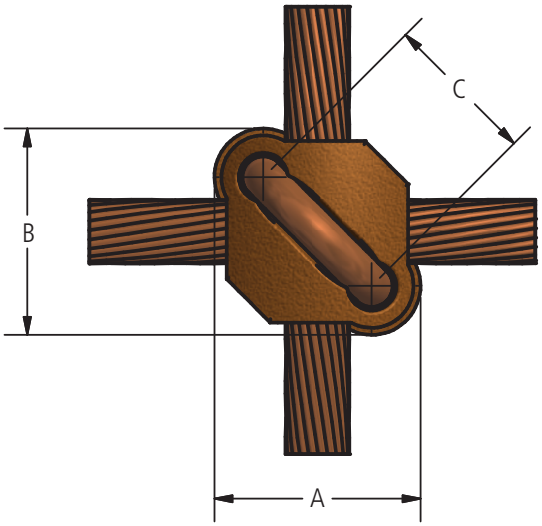

Ordering Information

CATALOG NUMBER	GROUND ROD	CABLE RANGE				DIMENSIONS IN INCHES				BOLT SIZE
		RUN		TAP						
		MIN	MAX	MIN	MAX	A	B	C	H	
GG4-4	-	8 Solid	4 Stranded	8 Solid	4 Stranded	1 17/32	1 17/32	15/16	1 3/4	3/8
GG13-4	3/8	4 Solid	2/0 Stranded	8 Solid	4 Stranded	1 23/32	1 17/32	1 1/16	2 1/8	3/8
GG13-13	3/8	4 Solid	2/0 Stranded	4 Solid	2/0 Stranded	1 23/32	1 23/32	1 1/8	2 5/16	3/8
GG25-4	1/2	2/0 Solid	250 MCM	8 Solid	4 Stranded	1 27/32	1 17/32	1 3/16	2 1/4	3/8
GG25-13	1/2	2/0 Solid	250 MCM	4 Solid	2/0 Stranded	1 27/32	1 23/23	1 9/32	2 1/2	3/8
GG25-25	1/2	2/0 Solid	250 MCM	2/0 Solid	250 MCM	1 27/32	1 27/32	1 3/8	2 5/8	3/8
GG50-4	3/4	300 MCM	500 MCM	8 Solid	4 Stranded	2 3/32	1 17/32	1 3/8	2 1/2	3/8
GG50-13	3/4	300 MCM	500 MCM	4 Solid	2/0 Stranded	2 3/32	1 23/32	1 15/32	2 3/4	3/8
GG50-25	3/4	300 MCM	500 MCM	2/0 Solid	250 MCM	2 3/32	1 27/32	1 9/16	2 7/8	3/8
GG50-50	3/4	300 MCM	500 MCM	300 MCM	500 MCM	2 3/32	2 3/32	1 23/32	3 3/8	1/2
GG75-4	1	500 MCM	750 MCM	8 Solid	4 Stranded	2 9/32	1 17/32	1 9/16	2 3/4	3/8
GG75-13	1	500 MCM	750 MCM	4 Solid	2/0 Stranded	2 9/32	1 23/32	1 21/32	3	3/8
GG75-25	1	500 MCM	750 MCM	2/0 Solid	250 MCM	2 9/32	1 27/32	1 23/32	3 1/8	3/8
GG75-50	1	500 MCM	750 MCM	300 MCM	500 MCM	2 21/32	2 3/32	1 31/32	3 5/8	1/2
GG75-75	1	500 MCM	750 MCM	500 MCM	750 MCM	2 21/32	2 21/32	2 3/16	3 15/16	1/2
GG100-4	-	750 MCM	1000 MCM	8 Solid	4 Stranded	2 7/16	1 17/32	1 23/32	3	3/8
GG100-13	-	750 MCM	1000 MCM	4 Solid	2/0 Stranded	2 7/16	1 23/32	1 25/32	3 1/4	3/8
GG100-25	-	750 MCM	1000 MCM	2/0 Solid	250 MCM	2 7/16	1 27/32	1 27/32	3 1/2	3/8
GG100-50	-	750 MCM	1000 MCM	300 MCM	500 MCM	2 13/16	2 3/32	2 3/32	3 13/16	1/2
GG100-75	-	750 MCM	1000 MCM	500 MCM	750 MCM	2 13/16	2 21/32	2 9/32	4 1/16	1/2
GG100-100	-	750 MCM	1000 MCM	750 MCM	1000 MCM	2 13/16	2 13/16	2 13/32	4 1/4	1/2

© 2011, AFL, all rights reserved. PP-3-00345, Revision 0, 3.3.11
Specifications are subject to change without notice.

DOSSERT®

TYPE GH

Ground Connector For Cable To Large Diameter Pipe

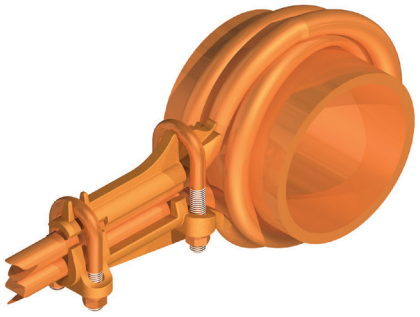

A ground connector for connecting a cable or wire to a large diameter pipe, tubular column or fence post. Each connector size accommodates a wide range of pipe sizes as well as cable sizes.

Material

Copper Alloy

Hardware

Everdur U-bolts, nuts and lockwashers

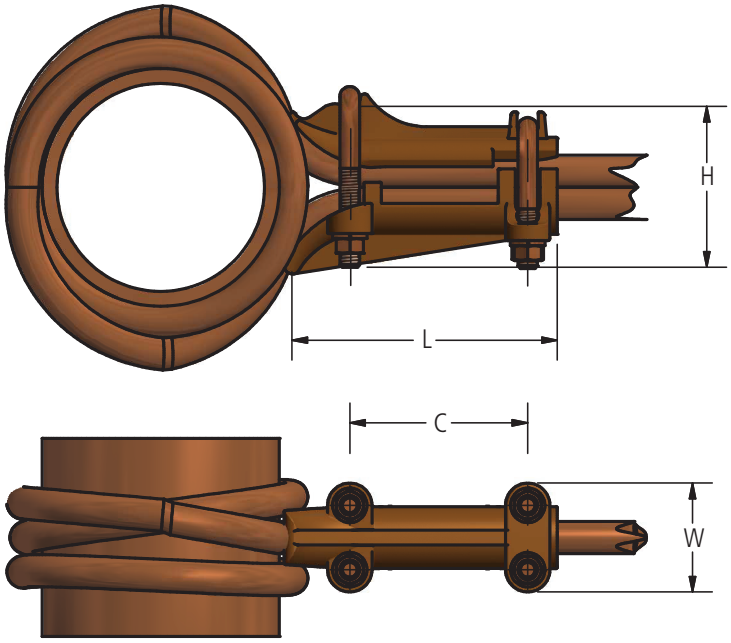

Ordering Information

CATALOG NUMBER	GROUNDING		GROUNDING PIPE SPS	DIMENSIONS IN INCHES				BOLT SIZE
	MIN	MAX		C	H	L	W	
GH13	4 Stranded	2/0 Stranded	6	3	4 7/16	5 1/4	2 7/16	1/2
GH13-S	4 Stranded	2/0 Stranded	Above 6	3	7	5 1/4	2 7/16	1/2
GH25	2/0 Stranded	250 MCM	6	4	4 1/8	6 1/4	2 3/4	1/2
GH25-S	2/0 Stranded	250 MCM	Above 6	4	7 1/2	6 1/4	2 3/4	1/2
GH50	300 MCM	500 MCM	6	4 1/2	4 7/8	6 3/4	2 3/4	1/2
GH50-S	300 MCM	500 MCM	Above 6	4 1/2	9	6 3/4	2 3/4	1/2

© 2011, AFL, all rights reserved. PP-3-00346, Revision 0, 3.8.11
Specifications are subject to change without notice.

DOSSERT®

TYPE GK

Ground Clamp For 3 Cables To Fence Post

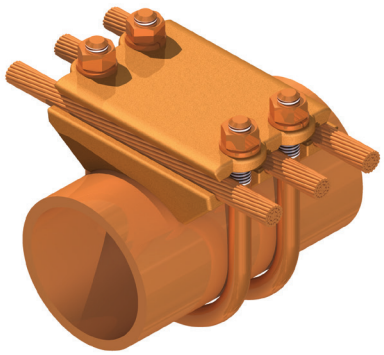

A ground connector for grounding three equal size cables at right angles to a grounding pipe or rod. Use of highly corrosion resistant materials allows the connector to be buried in the ground after connection is made. Finds wide application in the grounding of fences and structural members about a substation.

Material

Copper Alloy

Hardware

Everdur bolts, nuts and lockwashers

Note

For tin plating add suffix (SN) to catalog number. Example: GK25-4-SN

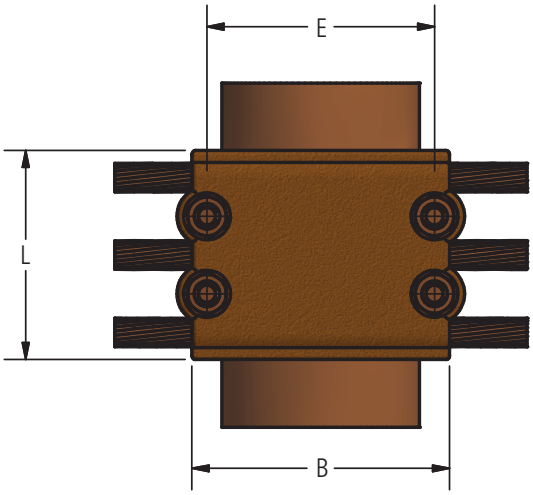

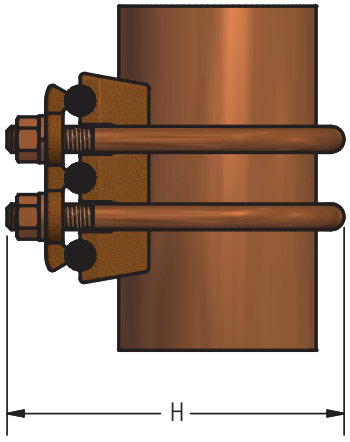

© 2011, AFL, all rights reserved. PP-3-00347, Revision 0, 3.3.11
Specifications are subject to change without notice.

DOSSERT®

TYPE GK

Ground Clamp For 3 Cables To Fence Post

Ordering Information

CATALOG NUMBER	GROUNDING		CABLE RANGE		DIMENSIONS IN INCHES				BOLT SIZE
	PIPE SPS	ROD	MIN	MAX	B	E	H	L	
GK25-4	1/4	1/2	8 Solid	#4 Stranded	1 5/8	1	2 1/16	2 1/2	3/8
GK25-13	1/4	1/2	4 Solid	2/0 Stranded	1 5/8	1	2 3/16	3 1/16	3/8
GK25-25	1/4	1/2	2/0 Solid	250 MCM	1 3/4	1 1/8	2 1/2	3 3/4	1/2
GK38-4	3/8	5/8 or 3/4	8 Solid	#4 Stranded	1 3/4	1 3/16	2 1/4	2 1/2	3/8
GK38-13	3/8	5/8 or 3/4	4 Solid	2/0 Stranded	1 3/4	1 3/16	2 3/8	3 1/16	3/8
GK38-25	3/8	5/8 or 3/4	2/0 Solid	250 MCM	2	1 5/16	2 11/16	3 3/4	1/2
GK38-50	3/8	5/8 or 3/4	300 MCM	500 MCM	2	1 5/16	3 3/16	4 5/8	1/2
GK75-4	1/2 or 3/4	7/8 or 1	8 Solid	#4 Stranded	2 1/4	1 1/2	2 1/2	2 1/2	3/8
GK75-13	1/2 or 3/4	7/8 or 1	4 Solid	2/0 Stranded	2 1/4	1 1/2	2 5/8	3 1/16	3/8
GK75-25	1/2 or 3/4	7/8 or 1	2/0 Solid	250 MCM	2 1/2	1 5/8	2 15/16	3 3/4	1/2
GK75-50	1/2 or 3/4	7/8 or 1	300 MCM	500 MCM	2 1/2	1 5/8	3 1/2	4 5/8	1/2
GK100-4	1	-	8 Solid	#4 Stranded	2 1/2	1 3/4	2 3/4	2 1/2	3/8
GK100-13	1	-	4 Solid	2/0 Stranded	2 1/2	1 3/4	2 7/8	3 1/16	3/8
GK100-25	1	-	2/0 Solid	250 MCM	2 5/8	1 7/8	3 1/4	3 3/4	1/2
GK100-50	1	-	300 MCM	500 MCM	2 7/8	1 7/8	3 3/4	4 5/8	1/2
GK100-75	1	-	500 MCM	750 MCM	2 7/8	1 7/8	3 7/8	5 1/4	1/2
GK125-4	1 1/4	-	8 Solid	#4 Stranded	2 1/2	2 1/8	3 1/8	2 1/2	3/8
GK125-13	1 1/4	-	4 Solid	2/0 Stranded	2 5/8	2 1/8	3 1/4	3 1/16	3/8
GK125-25	1 1/4	-	2/0 Solid	250 MCM	2 5/8	2 1/4	3 5/8	3 3/4	1/2
GK125-50	1 1/4	-	300 MCM	500 MCM	3	2 1/4	4	4 5/8	1/2
GK125-75	1 1/4	-	500 MCM	750 MCM	3	2 1/4	4 3/4	5 1/4	1/2
GK150-4	1 1/2	-	8 Solid	#4 Stranded	3 1/8	2 3/8	3 3/8	2 1/2	3/8
GK150-13	1 1/2	-	4 Solid	2/0 Stranded	3 1/8	2 3/8	3 1/2	3 1/16	3/8
GK150-25	1 1/2	-	2/0 Solid	250 MCM	3 1/4	2 1/2	3 7/8	3 3/4	1/2
GK150-50	1 1/2	-	300 MCM	500 MCM	3 1/2	2 1/2	4 3/8	4 5/8	1/2
GK150-75	1 1/2	-	500 MCM	750 MCM	3 1/2	2 1/2	4 5/8	5 1/4	1/2
GK150-100	1 1/2	-	750 MCM	1000 MCM	3 9/16	2 1/2	4 3/4	6	1/2
GK200-4	2	-	8 Solid	#4 Stranded	3 7/8	2 13/16	3 7/8	2 1/2	3/8
GK200-13	2	-	4 Solid	2/0 Stranded	4	2 13/16	4 1/8	3 1/16	3/8
GK200-25	2	-	2/0 Solid	250 MCM	4	2 15/16	4 9/16	3 3/4	1/2
GK200-50	2	-	300 MCM	500 MCM	4	2 15/16	4 3/4	4 5/8	1/2
GK200-75	2	-	500 MCM	750 MCM	4 1/8	2 15/16	5 1/8	5 1/4	1/2
GK200-100	2	-	750 MCM	1000 MCM	4 1/4	2 15/16	5 3/8	6	1/2
GK250-4	-	2 1/2	8 Solid	#4 Stranded	4 1/4	3 5/16	4 1/2	2 1/2	3/8
GK250-13	-	2 1/2	4 Solid	2/0 Stranded	4 1/4	3 5/16	4 3/4	3 1/16	3/8
GK250-25	-	2 1/2	2/0 Solid	250 MCM	4 1/2	3 7/16	5 3/16	3 3/4	1/2
GK250-50	-	2 1/2	300 MCM	500 MCM	4 1/2	3 7/16	5 1/4	4 5/8	1/2
GK250-75	-	2 1/2	500 MCM	750 MCM	4 3/4	3 7/16	5 9/16	5 1/4	1/2
GK250-100	-	2 1/2	750 MCM	1000 MCM	4 3/4	3 7/16	5 7/8	6	1/2
GK300-4	-	3	8 Solid	#4 Stranded	5	4	5	2 1/2	3/8
GK300-13	-	3	4 Solid	2/0 Stranded	5	4	5 1/4	3 1/16	3/8
GK300-25	-	3	2/0 Solid	250 MCM	5	4 1/8	5 5/8	3 3/4	1/2
GK300-50	-	3	300 MCM	500 MCM	5 1/4	4 1/8	5 7/8	4 5/8	1/2
GK300-75	-	3	500 MCM	750 MCM	5 1/4	4 1/8	6 3/8	5 1/4	1/2
GK300-100	-	3	750 MCM	1000 MCM	5 1/4	4 1/8	6 11/16	6	1/2

© 2011, AFL, all rights reserved. PP-3-00347, Revision 0, 3.3.11
Specifications are subject to change without notice.

DOSSERT®

TYPE GL

Ground Clamp for Cable to Flat Bar

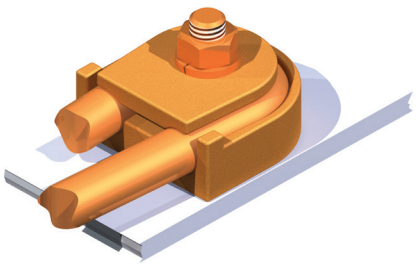

A connector for grounding a cable or wire to flat bar, plate or structural frame. The looping of the conductor about the clamping bolt insures a secure electrical contact and a high pull out strength. Standard bolt length is provided to mount the connector on a 1/4 inch thick member.

Material

Copper Alloy

Hardware

Everdur bolts, nuts and lockwashers

Note

- Longer bolts can be furnished on request.
- For tin plating add suffix "-SN" to end of catalog number. Example: GL13-38-SN

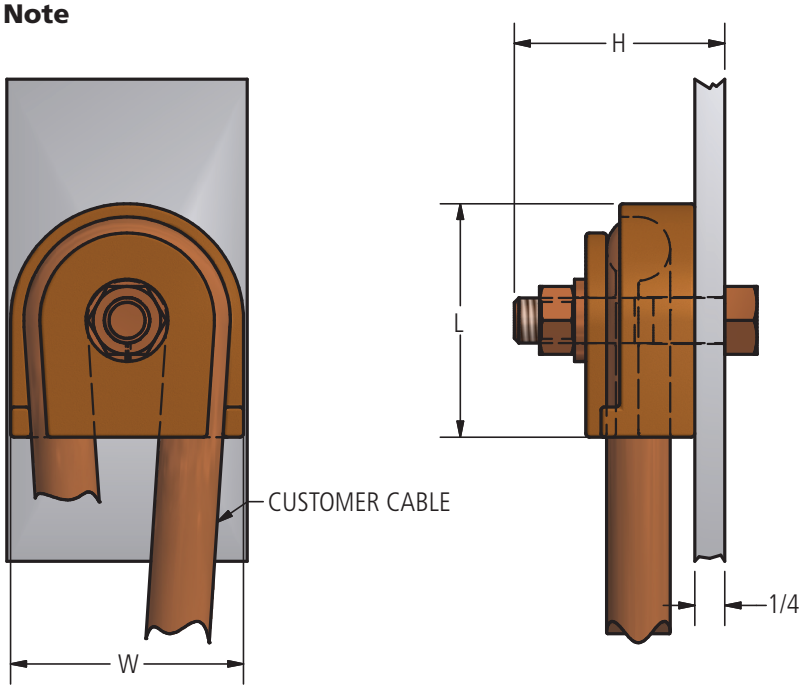

Ordering Information

CATALOG NUMBER	CABLE RANGE		DIMENSIONS IN INCHES			BOLT SIZE
	MIN	MAX	H	L	W	
GL4-38	8 Stranded	4 Stranded	1 1/2	1 7/16	1 1/4	3/8
GL4-50	8 Stranded	4 Stranded	1 7/8	1 15/16	1 3/4	1/2
GL4-63	8 Stranded	4 Stranded	2	1 15/16	1 3/4	5/8
GL13-38	3 Stranded	2/0 Stranded	2	1 7/8	1 11/16	3/8
GL13-50	3 Stranded	2/0 Stranded	2 1/8	1 15/16	1 13/16	1/2
GL13-63	3 Stranded	2/0 Stranded	2 1/4	1 15/16	1 13/16	5/8
GL25-38	3/0 Stranded	250 MCM	2 1/4	2 7/16	2 1/8	3/8
GL25-50	3/0 Stranded	250 MCM	2 3/8	2 7/16	2 1/4	1/2
GL25-63	3/0 Stranded	250 MCM	2 1/2	2 7/16	2 1/4	5/8

© 2011, AFL, all rights reserved. PP-3-00348, Revision 1, 11.9.18
Specifications are subject to change without notice.

DOSSERT®

TYPE GPC

Ground Clamp for Cable to Pipe in Parallel

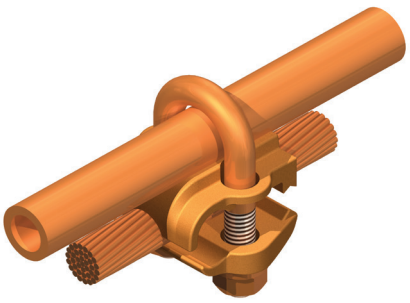

A ground clamp for connecting a cable to a rod or pipe in a parallel or right angle position. Each position will accomodate a wide range of cable sizes. The cable can be placed in either clamping position without disassembly of clamp. Whole clamp is highly corrosion resistant.

Material

Copper Alloy

Hardware

Everdur U-bolts, nuts and lockwashers

Notes

- For O.D. pipe sizes to specified, add -R to catalog number, EX: GPC38R-4
- For tin plating, add suffix "-SN" to end of catalog number. EX: GPC38-4-SN
- For stainless steel bolts, lockwashers and Everdur nuts, add "-SSHBN" to catalog number. EX: GPC38-4-SSHBN
- All sizes are not shown, please contact customer service.

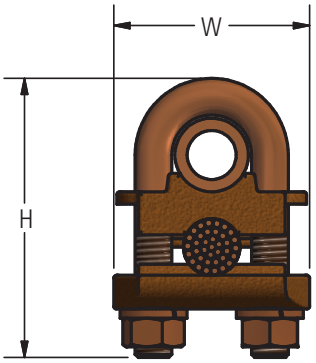

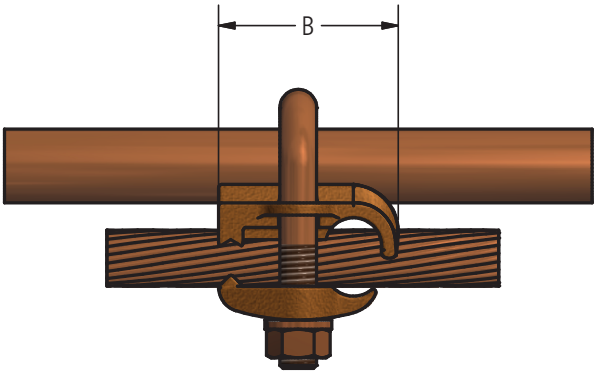

© 2011-2012, AFL, all rights reserved. PP-3-00349, Revision 3, 11.9.18
Specifications are subject to change without notice.

DOSSERT®

TYPE GPC

Ground Clamp for Cable to Pipe in Parallel

Ordering Information

CATALOG NUMBER	GROUNDING		CABLE RANGE		DIMENSIONS IN INCHES			BOLT SIZE
	PIPE SPS	ROD	MIN	MAX	B	H	W	
GPC25-4	1/4	1/2	8 Solid	4 Stranded	1.44	2.44	1.88	3/8
GPC25-13	1/4	1/2	4 Solid	2/0 Stranded	1.63	2.44	1.88	3/8
GPC25-25	1/4	1/2	2/0 Solid	250 MCM	1.88	2.50	1.88	3/8
GPC25-50	1/4	1/2	300 MCM	500 MCM	1.88	2.50	1.88	3/8
GPC38-4	3/8	5/8 or 3/4	8 Solid	4 Stranded	1.44	2.50	2.00	3/8
GPC38-13	3/8	5/8 or 3/4	4 Solid	2/0 Stranded	1.63	2.63	2.00	3/8
GPC38-25	3/8	5/8 or 3/4	2/0 Solid	250 MCM	1.88	2.75	2.00	3/8
GPC38-50	3/8	5/8 or 3/4	300 MCM	500 MCM	2.38	3.25	2.38	1/2
GPC75-4	1/2 or 3/4	7/8 or 1	8 Solid	4 Stranded	1.44	2.56	2.38	3/8
GPC75-13	1/2 or 3/4	7/8 or 1	4 Solid	2/0 Stranded	1.63	2.75	2.38	3/8
GPC75-25	1/2 or 3/4	7/8 or 1	2/0 Solid	250 MCM	1.88	2.88	2.38	3/8
GPC75-50	1/2 or 3/4	7/8 or 1	300 MCM	500 MCM	2.38	3.50	2.75	1/2
GPC100-4	1	1 1/8 - 1 1/4	8 Solid	4 Stranded	1.44	2.75	2.63	3/8
GPC100-13	1	1 1/8 - 1 1/4	4 Solid	2/0 Stranded	1.63	3.25	2.63	3/8
GPC100-25	1	1 1/8 - 1 1/4	2/0 Solid	250 MCM	1.88	3.25	2.63	3/8
GPC100-50	1	1 1/8 - 1 1/4	300 MCM	500 MCM	2.38	3.75	3.00	1/2
GPC125-4	1 1/4	1 3/8 - 1 5/8	8 Solid	4 Stranded	1.44	3.25	3.00	3/8
GPC125-13	1 1/4	1 3/8 - 1 5/8	4 Solid	2/0 Stranded	1.63	3.56	3.00	3/8
GPC125-25	1 1/4	1 3/8 - 1 5/8	2/0 Solid	250 MCM	1.88	3.63	3.00	3/8
GPC125-50	1 1/4	1 3/8 - 1 5/8	300 MCM	500 MCM	2.38	4.06	3 3/8	1/2
GPC150-4	1 1/2	1 5/8 - 1 7/8	8 Solid	4 Stranded	1.44	3.44	3.25	3/8
GPC150-13	1 1/2	1 5/8 - 1 7/8	4 Solid	2/0 Stranded	1.63	3.44	3.25	3/8
GPC150-25	1 1/2	1 5/8 - 1 7/8	2/0 Solid	250 MCM	1.88	4.00	3.25	3/8
GPC150-50	1 1/2	1 5/8 - 1 7/8	300 MCM	500 MCM	2.38	4.31	3.63	1/2
GPC200-4	2	2 - 2 1/2	8 Solid	4 Stranded	1.44	3.88	3.69	3/8
GPC200-13	2	2 - 2 1/2	4 Solid	2/0 Stranded	1.63	4.25	3.69	3/8
GPC200-25	2	2 - 2 1/2	2/0 Solid	250 MCM	1.88	4.44	3.69	3/8
GPC200R-25	-	2 1/2	2/0 Solid	250 MCM	1.88	4.44	3.69	3/8
GPC200-50	2	2 - 2 1/2	300 MCM	500 MCM	2.38	5.16	4.06	1/2
GPC250-4	2 1/2	2 5/8 - 2 7/8	8 Solid	4 Stranded	1.44	4.38	4.19	3/8
GPC250-13	2 1/2	2 5/8 - 2 7/8	4 Solid	2/0 Stranded	1.63	4.75	4.19	3/8
GPC250-25	2 1/2	2 5/8 - 2 7/8	2/0 Solid	250 MCM	1.88	4.88	4.19	3/8
GPC250R-25	-	2 1/2	2/0 Solid	250 MCM	1.88	4.88	4.19	3/8
GPC250-50	2 1/2	2 5/8 - 2 7/8	300 MCM	500 MCM	2.38	5.50	4.56	1/2
GPC300-4	3	3 1/4 - 3 1/2	8 Solid	4 Stranded	1.44	5.00	4.81	3/8
GPC300-13	3	3 1/4 - 3 1/2	4 Solid	2/0 Stranded	1.63	5.38	4.75	3/8
GPC300-25	3	3 1/4 - 3 1/2	2/0 Solid	250 MCM	1.81	5.50	4.75	3/8
GPC300R-25	-	3	2/0 Solid	250 MCM	1.88	5.50	4.31	3/8
GPC300-50	3	3 1/2	300 MCM	500 MCM	2.38	5.75	5.19	1/2
GPC350-4	3 1/2	3 3/4 - 4	8 Solid	4 Stranded	1.44	5.50	5.19	3/8
GPC350-13	3 1/2	3 3/4 - 4	4 Solid	2/0 Stranded	1.63	5.88	5.38	3/8
GPC350-25	3 1/2	3 3/4 - 4	2/0 Solid	250 MCM	1.88	6.00	5.31	3/8
GPC350-50	3 1/2	3 3/4 - 4	300 MCM	500 MCM	2.38	6.81	5.69	1/2
GPC400-4	4	4 1/4 - 4 1/2	8 Solid	4 Stranded	1.44	6.00	5.81	3/8
GPC400-13	4	4 1/4 - 4 1/2	4 Solid	2/0 Stranded	1.63	6.38	5.75	3/8
GPC400-25	4	4 1/4 - 4 1/2	2/0 Solid	250 MCM	1.81	6.50	5.75	3/8
GPC400R-25	-	4	2/0 Solid	250 MCM	1.88	6.00	5.31	3/8
GPC400-50	4	4 1/4 - 4 1/2	300 MCM	500 MCM	2.38	7.41	6.19	1/2
GPC600-50	6	6 5/8	300 MCM	500 MCM	2.38	9.77	8.31	1/2

© 2011-2012, AFL, all rights reserved. PP-3-00349, Revision 3, 11.9.18
Specifications are subject to change without notice.

DOSSERT®

TYPE GPF

Universal Ground Connector for Cable to Pipe

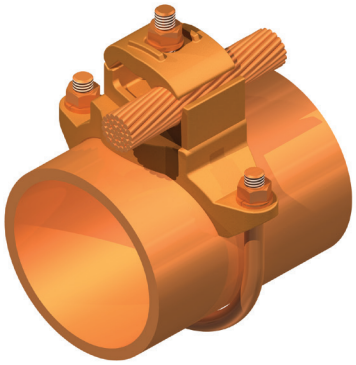

A universal ground connector for connecting a groundwire or cable to pipe. The rotatable feature of the conductor clamping element permits the positioning and clamping of the wire or cable at any angle through a full 360° arc.

Material

Copper Alloy

Hardware

Everdur bolts, lockwashers and nuts

Note

For tin plating, add suffix "-SN" to catalog number. Example: GPF250-13-SN

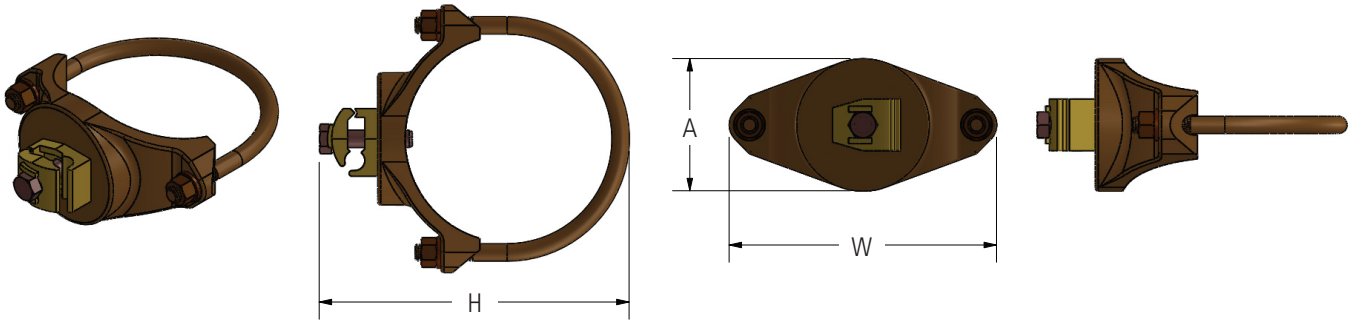

Ordering Information

CATALOG NUMBER	GROUND PIPE SPS	CABLE RANGE		DIMENSIONS IN INCHES			
		MIN	MAX	A	H	W	BOLT SIZE
GPF100-25	1	2/0 Solid	250 MCM	1.38	4.33	2.63	3/8
GPF200-25	2	2/0 Solid	250 MCM	2.00	5.38	3.69	3/8
GPF200-50	2	300 MCM	500 MCM	2.00	5.66	3.69	3/8
GPF250-4	2 1/2	8 Solid	4 Stranded	1.63	4.75	4.19	3/8
GPF250-13	2 1/2	4 Solid	2/0 Stranded	2.25	4.88	4.19	3/8
GPF250-25	2 1/2	2/0 Solid	250 MCM	2.25	5.25	4.19	3/8
GPF250-50	2 1/2	300 MCM	500 MCM	2.50	6.04	4.19	1/2
GPF300-4	3	8 Solid	4 Stranded	1.63	5.38	4.81	3/8
GPF300-13	3	4 Solid	2/0 Stranded	2.25	5.50	4.81	3/8
GPF300-25	3	2/0 Solid	250 MCM	2.25	5.75	4.81	3/8
GPF300-50	3	300 MCM	500 MCM	2.88	6.25	5.19	1/2
GPF350-4	3 1/2	8 Solid	4 Stranded	1.63	5.88	5.31	3/8
GPF350-13	3 1/2	4 Solid	2/0 Stranded	2.25	6.00	5.31	3/8
GPF350-25	3 1/2	2/0 Solid	250 MCM	2.50	6.60	5.31	3/8
GPF350-50	3 1/2	300 MCM	500 MCM	2.50	7.16	5.31	1/2
GPF400-4	4	8 Solid	4 Stranded	1.63	6.38	5.81	3/8
GPF400-13	4	4 Solid	2/0 Stranded	2.25	6.50	5.81	3/8
GPF400-25	4	2/0 Solid	250 MCM	2.25	6.75	5.81	3/8
GPF400-50	4	300 MCM	500 MCM	2.88	7.25	6.19	1/2
GPF450-13	4 1/2	4 Solid	2/0 Stranded	2.25	7.00	6.31	3/8
GPF450-25	4 1/2	2/0 Solid	250 MCM	2.50	7.25	6.31	3/8
GPF450-50	4 1/2	300 MCM	500 MCM	2.88	7.75	6.69	1/2
GPF500-13	5	4 Solid	2/0 Stranded	2.25	7.56	6.88	3/8
GPF500-25	5	2/0 Solid	250 MCM	2.50	7.81	6.88	3/8
GPF500-50	5	300 MCM	500 MCM	2.88	8.31	7.25	1/2
GPF600-13	6	4 Solid	2/0 Stranded	2.25	8.50	7.94	3/8
GPF600-25	6	2/0 Solid	250 MCM	2.50	8.75	7.94	3/8
GPF600R-25	6	2/0 Solid	250 MCM	2.50	8.75	7.31	3/8
GPF600-50	6	300 MCM	500 MCM	2.88	9.25	8.38	1/2

© 2011, AFL, all rights reserved. PP-3-00352, Revision 2, 7.20.18
Specifications are subject to change without notice.

DOSSERT®
TYPE GPH-N

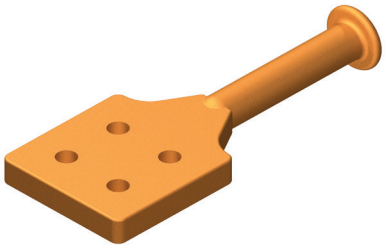

Other pad configurations can be ordered by contacting Customer Service.

Material
Copper Alloy

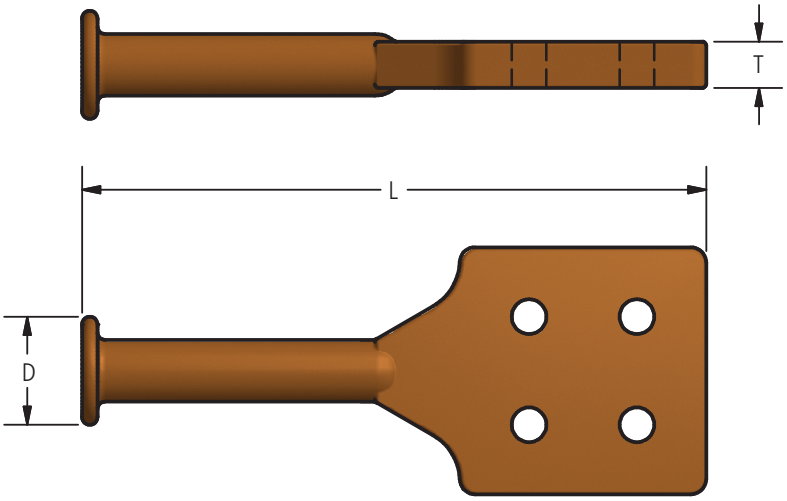

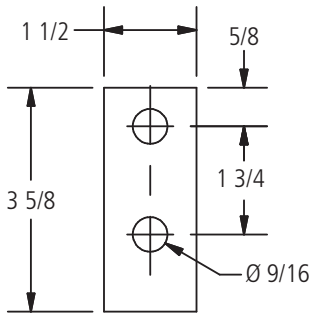

FIG. 1

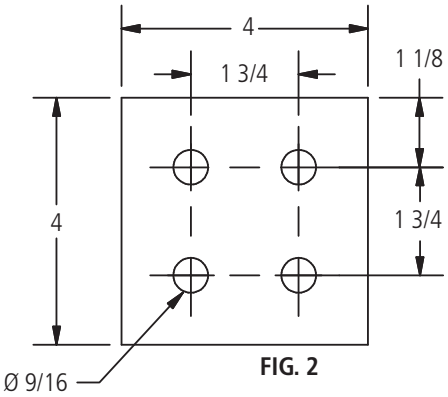

FIG. 2

Ordering Information

CATALOG NUMBER	FIG. NO.	DIMENSIONS IN INCHES		
		D	L	T
GPH-2N	1	1 1/4	8 5/8	1/2
GPH-4N4	2	1 3/4	10 1/8	3/4

© 2011, AFL, all rights reserved. PP-3-00356, Revision 1, 8.5.13
Specifications are subject to change without notice.

DOSSERT®
TYPE GPH



Material
Copper Alloy

Hardware
Everdur Bolts, Nuts, and Lock Washers

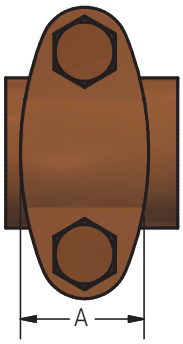

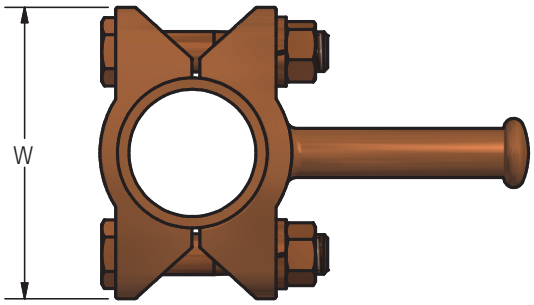

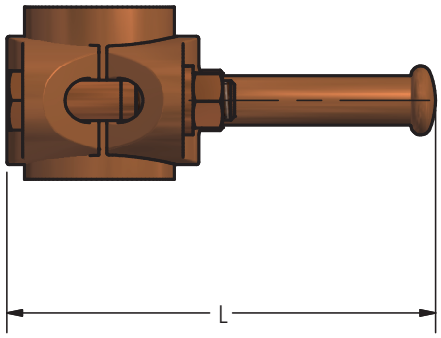

Ordering Information

CATALOG NUMBER	SPS	DIMENSIONS IN INCHES			
		A	L	BOLT SIZE	W
GPH50	1/2	1 1/2	5 1/2	3/8	3
GPH125	1 1/4	1 5/8	6 1/4	1/2	3 3/8
GPH150	1 1/2	2	6 9/16	1/2	3 11/16
GPH200	2	2	7 1/16	1/2	4 1/4
GPH250	2 1/2	2	7 9/16	1/2	4 3/4
GPH300	3	2	8 1/4	1/2	5 3/8
GPH400	4	2	9 1/4	1/2	6 3/8

© 2011, AFL, all rights reserved. PP-3-00353, Revision 0, 3.8.11
Specifications are subject to change without notice.

DOSSERT®

TYPE GR

Grounding Connector for Braid to Pipe

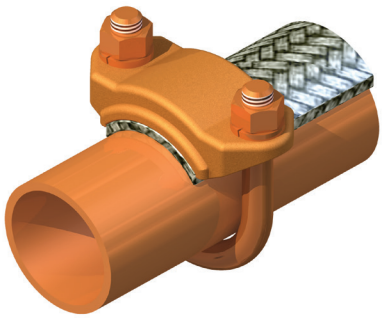

A ground connector for grounding flexible braid, laminated copper band, and copper bar to a pipe. Will also accommodate stranded cable when cable is unbraided and flattened out.

Material

Copper Alloy

Hardware

Everdur U-bolts, nuts and lockwashers

Notes

- All sizes are not shown; item is available up to 6 inches SPS and other braid-to-pipe configurations.
- For Electro Tin plate, add suffix "-SN" to catalog number. Example: GR400A-SN

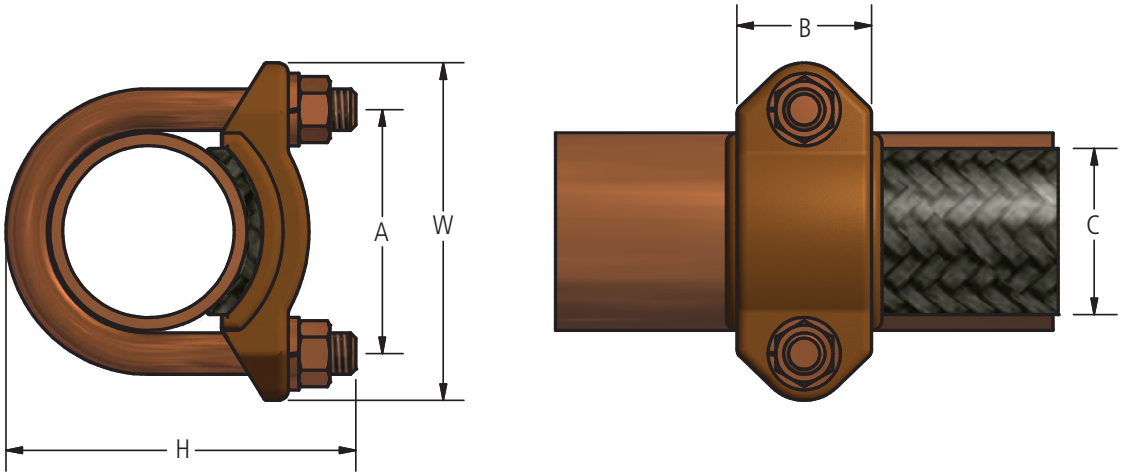

Ordering Information

CATALOG NUMBER	SPS	DIMENSIONS IN INCHES					BOLT SIZE
		A	B	C	H	W	
GR100A	1	1 3/4	1 1/8	1	2 5/8	2 5/8	3/8
GR125A	1 1/4	2 3/32	1 1/4	1	3	2 31/32	3/8
GR150A	1 1/2	2 5/16	1 3/8	1	3 9/32	3 3/16	3/8
GR150B	1 1/2	2 5/16	1 7/16	1 1/2	3 19/64	3 3/16	3/8
GR200A	2	2 13/16	1 1/4	1	3 27/32	3 11/16	3/8
GR200B	2	2 13/16	1 3/8	1 1/2	3 27/32	3 21/32	3/8
GR200C	2	2 15/16	1 7/8	2	4 7/32	4 1/16	1/2
GR250A	2 1/2	3 7/16	1 5/8	2	4 17/32	4 9/16	1/2
GR250B	2 1/2	3 7/16	1 7/8	2 1/2	4 11/32	4 9/16	1/2
GR300A	3	4 1/16	2 1/8	2	5 1/32	5 3/16	1/2
GR300B	3	4 1/16	1 7/8	2 1/2	5 1/32	5 3/16	1/2
GR300C	3	4 1/16	1 7/8	3	5 1/32	5 3/16	1/2
GR350A	3 1/2	4 5/8	2 1/8	2	5 7/8	5 21/32	1/2
GR350B	3 1/2	4 5/8	2 1/4	2 1/2	5 7/8	5 21/32	1/2
GR350C	3 1/2	4 5/8	2 1/4	3	5 7/8	5 21/32	1/2
GR400A	4	5 1/8	2 1/4	2	6 1/16	6 1/4	1/2
GR400B	4	5 1/8	2 3/8	2 1/2	6 1/16	6 1/4	1/2
GR400C	4	5 1/8	2 3/8	3	6 1/16	6 1/4	1/2
GR600C	6	7 3/16	2 1/2	3	8 3/16	8 5/16	1/2

© 2011, AFL, all rights reserved. PP-3-00357, Revision 2, 1.30.19
Specifications are subject to change without notice.

DOSSERT®

TYPE GS

Grounding Clamp for 2 Cables to Pipe at 90°

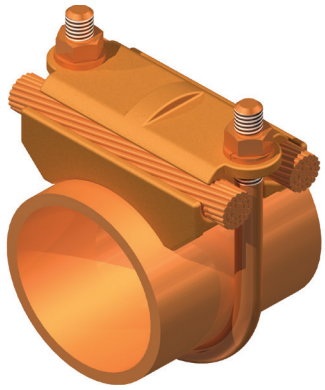

A ground connector for grounding two wires or cables to a ground rod pipe. Designed to accommodate a wide range of conductor sizes.

Material

Copper Alloy

Hardware

Everdur U-bolts, nuts and lockwashers

Note

For tin plating add suffix "-SN" to catalog number. Example: GS38-25-SN

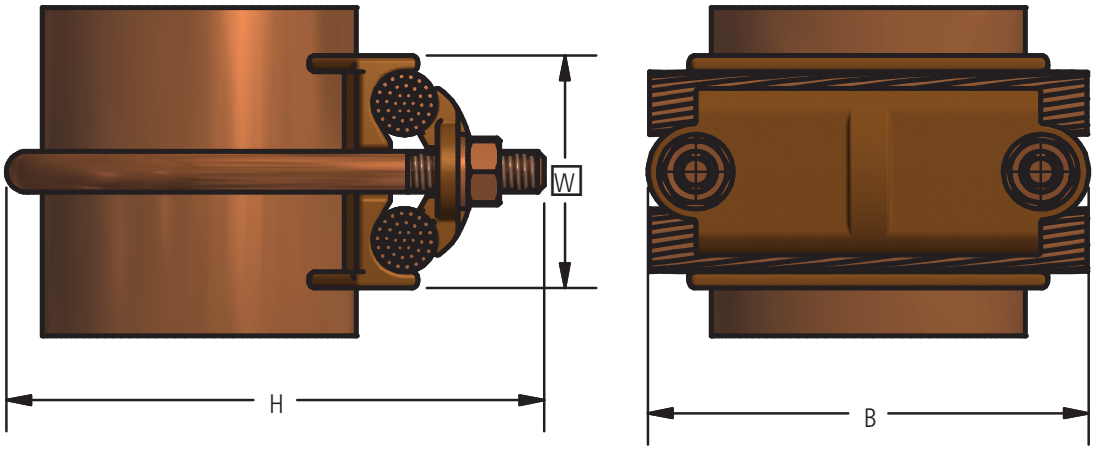

Ordering Information

CATALOG NUMBER	GROUNDING		CABLE RANGE		DIMENSIONS IN INCHES			BOLT SIZE
	PIPE SPS	ROD	MIN	MAX	B	H	W	
GS25-4	1/4	1/2	8 Solid	4 Stranded	1 13/16	2 1/8	1 7/16	3/8
GS25-13	1/4	1/2	4 Solid	2/0 Stranded	1 13/16	2 1/4	1 7/8	3/8
GS25-25	1/4	1/2	2/0 Solid	250 MCM	1 13/16	2 7/16	2 3/16	3/8
GS38-4	3/8	5/8 - 3/4	8 Solid	4 Stranded	2	2 5/16	2	3/8
GS38-13	3/8	5/8 - 3/4	4 Solid	2/0 Stranded	2	2 1/2	2	3/8
GS38-25	3/8	5/8 - 3/4	2/0 Solid	250 MCM	2	2 5/8	2	3/8
GS38-50	3/8	5/8 - 3/4	300 MCM	500 MCM	2 3/8	3 3/16	2 3/8	1/2
GS75-4	1/2 - 3/4	7/8 - 1	8 Solid	4 Stranded	2 3/8	2 3/4	1 7/16	3/8
GS75-13	1/2 - 3/4	7/8 - 1	4 Solid	2/0 Stranded	2 3/8	2 15/16	1 7/8	3/8
GS75-25	1/2 - 3/4	7/8 - 1	2/0 Solid	250 MCM	2 3/8	3 1/16	2 3/16	3/8
GS75-50	1/2 - 3/4	-	300 MCM	500 MCM	2 3/4	3 1/2	2 7/8	1/2
GS100-4	1	-	8 Solid	4 Stranded	2 5/8	3 1/16	1 7/16	3/8
GS100-13	1	-	4 Solid	2/0 Stranded	2 5/8	3 3/16	1 7/8	3/8
GS100-25	1	-	2/0 Solid	250 MCM	2 5/8	3 3/8	2 3/16	3/8
GS100-50	1	-	300 MCM	500 MCM	2 5/8	3 15/16	2 7/8	1/2
GS100-75	1	-	500 MCM	750 MCM	3 1/4	4 1/8	3 1/4	1/2
GS150-4	1 1/2	2	8 Solid	4 Stranded	3 3/16	4	1 7/16	3/8
GS150-13	1 1/2	2	4 Solid	2/0 Stranded	3 1/4	4	1 7/8	3/8
GS150-25	1 1/2	2	2/0 Solid	250 MCM	3 1/4	4	2 3/16	3/8
GS150-50	1 1/2	2	300 MCM	500 MCM	3 5/8	4 7/8	2 3/4	1/2
GS200-13	2	-	4 Solid	2/0 Stranded	3 11/16	4 3/8	1 7/8	3/8
GS200-25	2	-	2/0 Solid	250 MCM	3 11/16	4 1/2	2 3/16	3/8
GS250-13	2 1/2	-	4 Solid	2/0 Stranded	4 3/16	4 15/16	1 7/8	3/8
GS250-25	2 1/2	-	2/0 Solid	250 MCM	4 3/16	5 1/16	2 3/16	3/8
GS300-13	3	-	4 Solid	2/0 Stranded	4 13/16	5 7/16	1 7/8	3/8
GS300-25	3	-	2/0 Solid	250 MCM	4 13/16	5 7/16	2 3/16	3/8
GS350-25	3 1/2	-	4 Solid	2/0 Stranded	5 5/16	6 1/16	1 7/8	3/8
GS350-50	3 1/2	-	300 MCM	500 MCM	5 5/16	6 1/16	2 1/4	3/8

© 2011, AFL, all rights reserved. PP-3-00358, Revision 0, 3.3.11
Specifications are subject to change without notice.

DOSSERT®

TYPE GW

Grounding Clamp for 2 Cables to Pipe in Parallel

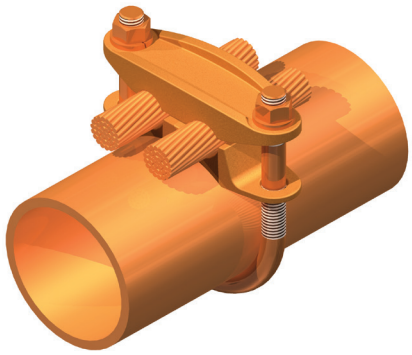

A clamp type grounding connector for grounding two cables to a single rod or pipe. A single cable may be used by looping back on itself. Each connector is designed to accommodate a wide range of conductor sizes. Other sizes than those listed can be promptly furnished.

Material

Copper Alloy

Hardware

Everdur U-bolts, nuts and lockwashers

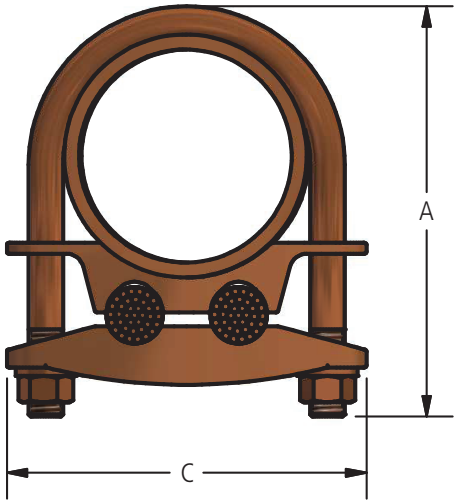

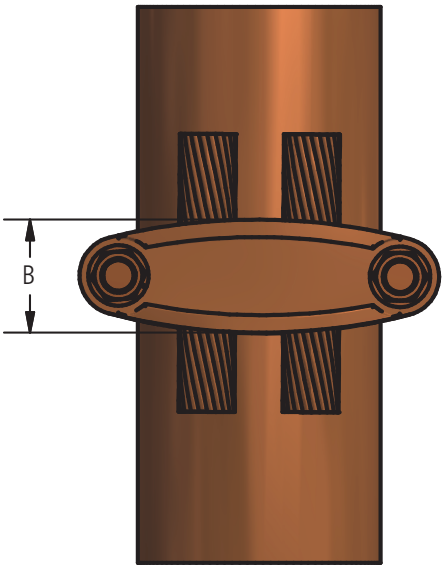

© 2011, AFL, all rights reserved. PP-3-00362, Revision 0, 3.3.11
Specifications are subject to change without notice.

DOSSERT®

TYPE GW

Grounding Clamp for 2 Cables to Pipe in Parallel

Ordering Information

CATALOG NUMBER	GROUNDING		CABLE RANGE		DIMENSIONS IN INCHES			BOLT SIZE
	PIPE SPS	ROD	MIN	MAX	A	B	C	
GW38-4	3/8	5/8 - 3/4	#8 Solid	#4 Stranded	2 3/8	1 1/8	2 1/16	3/8
GW38-13	3/8	5/8 - 3/4	#4 Solid	2/0 Stranded	2 9/16	1 1/8	2 1/16	3/8
GW38-25	3/8	5/8 - 3/4	2/0 Solid	250 MCM	2 3/4	1 1/8	2 1/16	3/8
GW75-4	3/4	7/8 - 1	#8 Solid	#4 Stranded	2 5/8	1 1/8	2 3/8	3/8
GW75-13	3/4	7/8 - 1	#4 Solid	2/0 Stranded	2 3/4	1 1/8	2 3/8	3/8
GW75-25	3/4	7/8 - 1	2/0 Solid	250 MCM	2 7/8	1 1/8	2 3/8	3/8
GW75-50	3/4	7/8 - 1	300 MCM	500 MCM	4 1/8	1 9/16	3 5/8	3/8
GW100-4	1	1 1/8 - 1 1/4	#8 Solid	#4 Stranded	2 15/16	1 1/8	2 5/8	3/8
GW100-13	1	1 1/8 - 1 1/4	#4 Solid	2/0 Stranded	3	1 1/8	2 5/8	3/8
GW100-25	1	1 1/8 - 1 1/4	2/0 Solid	250 MCM	3 5/16	1 1/8	2 5/8	3/8
GW100-50	1	1 1/8 - 1 1/4	300 MCM	500 MCM	4 1/8	1 9/16	3 5/8	1/2
GW125-4	1 1/4	1 3/8 - 1 5/8	#8 Solid	#4 Stranded	3 3/16	1 3/8	3	3/8
GW125-13	1 1/4	1 3/8 - 1 5/8	#4 Solid	2/0 Stranded	3 5/16	1 3/8	3	3/8
GW125-25	1 1/4	1 3/8 - 1 5/8	2/0 Solid	250 MCM	3 5/8	1 7/16	3	3/8
GW125-50	1 1/4	1 3/8 - 1 5/8	300 MCM	500 MCM	4 1/2	1 9/16	4	1/2
GW150-4	1 1/2	1 3/4 - 2	#8 Solid	#4 Stranded	3 1/2	1 3/8	3 1/4	3/8
GW150-13	1 1/2	1 3/4 - 2	#4 Solid	2/0 Stranded	3 11/16	1 3/8	3 1/4	3/8
GW150-25	1 1/2	1 3/4 - 2	2/0 Solid	250 MCM	3 3/4	1 7/16	3 1/4	3/8
GW150-50	1 1/2	1 3/4 - 2	300 MCM	500 MCM	4 7/16	1 9/16	3 5/8	1/2
GW200-4	2	2 - 2 3/8	#8 Solid	#4 Stranded	4	1 3/8	3 11/16	3/8
GW200-13	2	2 - 2 3/8	#4 Solid	2/0 Stranded	4 3/8	1 3/8	3 11/16	3/8
GW200-25	2	2 - 2 3/8	2/0 Solid	250 MCM	4 1/2	1 1/2	3 11/16	3/8
GW200-50	2	2 - 2 3/8	300 MCM	500 MCM	4 7/8	1 9/16	4 1/16	1/2
GW250-4	2 1/2	2 5/8 - 2 7/8	#8 Solid	#4 Stranded	4 1/2	1 3/8	4 3/16	3/8
GW250-13	2 1/2	2 5/8 - 2 7/8	#4 Solid	2/0 Stranded	4 13/16	1 3/8	4 3/16	3/8
GW250-25	2 1/2	2 5/8 - 2 7/8	2/0 Solid	250 MCM	4 15/16	1 1/2	4 3/16	3/8
GW250-50	2 1/2	2 5/8 - 2 7/8	300 MCM	500 MCM	5 1/4	1 9/16	4 9/16	1/2
GW250-75	2 1/2	2 5/8 - 2 7/8	500 MCM	750 MCM	5 7/8	1 5/8	4 15/16	5/8
GW300-4	3	3 1/4 - 3 1/2	#8 Solid	#4 Stranded	5 1/8	1 3/8	4 13/16	3/8
GW300-13	3	3 1/4 - 3 1/2	#4 Solid	2/0 Stranded	5 7/16	1 3/8	4 13/16	3/8
GW300-25	3	3 1/4 - 3 1/2	2/0 Solid	250 MCM	5 9/16	1 3/8	4 13/16	3/8
GW300-50	3	3 1/4 - 3 1/2	300 MCM	500 MCM	5 7/8	1 9/16	5 3/16	1/2
GW300-75	3	3 1/4 - 3 1/2	500 MCM	750 MCM	6 1/2	1 5/8	5 9/16	5/8
GW300-100	3	3 1/4 - 3 1/2	750 MCM	1000 MCM	6 5/8	1 3/4	5 9/16	5/8
GW350-4	3 1/2	3 3/4 - 4	#8 Solid	#4 Stranded	5 5/8	1 1/2	5 5/16	3/8
GW350-13	3 1/2	3 3/4 - 4	#4 Solid	2/0 Stranded	5 5/16	1 1/2	5 5/16	3/8
GW350-25	3 1/2	3 3/4 - 4	2/0 Solid	250 MCM	6 1/16	1 1/2	5 5/16	3/8
GW350-50	3 1/2	3 3/4 - 4	300 MCM	500 MCM	6 3/8	1 9/16	5 11/16	1/2
GW350-75	3 1/2	3 3/4 - 4	500 MCM	750 MCM	7	1 5/8	6 11/16	5/8
GW350-100	3 1/2	3 3/4 - 4	750 MCM	1000 MCM	7 1/8	1 3/4	6 11/16	5/8
GW400-4	4	4 1/4 - 4 1/2	#8 Solid	#4 Stranded	6 1/8	1 5/8	5 13/16	3/8
GW400-13	4	4 1/4 - 4 1/2	#4 Solid	2/0 Stranded	6 3/16	1 5/8	5 13/16	3/8
GW400-25	4	4 1/4 - 4 1/2	2/0 Solid	250 MCM	6 1/2	1 5/8	5 13/16	3/8
GW400-50	4	4 1/4 - 4 1/2	300 MCM	500 MCM	6 7/8	1 5/8	6 3/16	1/2
GW400-75	4	4 1/4 - 4 1/2	500 MCM	750 MCM	7 1/2	1 5/8	6 9/16	5/8
GW400-100	4	4 1/4 - 4 1/2	750 MCM	1000 MCM	7 5/8	1 3/4	6 9/16	5/8
GW600-4	6	-	#8 Solid	#4 Stranded	8 3/8	1 1/2	7 15/16	3/8
GW600-25	6	-	2/0 Solid	250 MCM	8 5/8	1 5/8	7 15/16	3/8

© 2011, AFL, all rights reserved. PP-3-00362, Revision 0, 3.3.11
Specifications are subject to change without notice.

DOSSERT®

TYPE GX

Grounding Connector For Direct Contact Cross Conductors

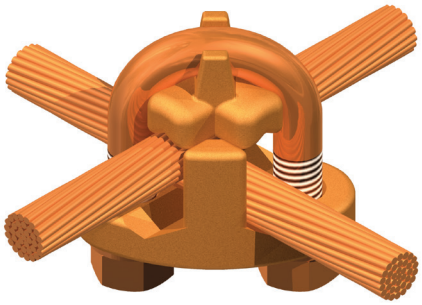

A grounding connector for direct contact cross grounding wire or cable. Each clamp accommodates two conductors of the minimum or maximum size or any intermediate combination of conductors.

Material

Copper Alloy

Hardware

Everdur U-bolts, nuts and lockwashers

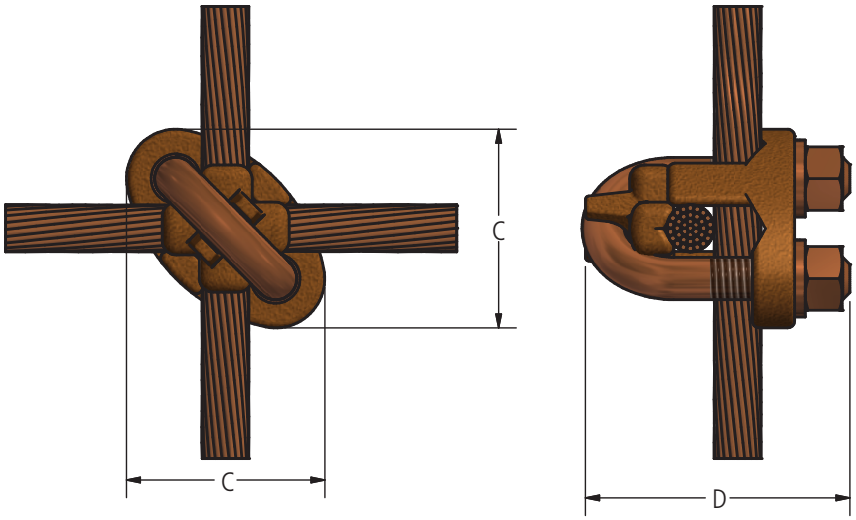

Ordering Information

CATALOG NUMBER	CABLE RANGE		DIMENSIONS IN INCHES		BOLT SIZE
	MIN	MAX	C	D	
GX13-13	6 Str	2/0 Str	1 3/4	1 11/16	3/8
GX21-21	1 Str	4/0 Str	1 7/8	2 1/4	3/8
GX30-30	1/0 Str	300 MCM	2 5/16	2 3/4	1/2
GX50-50	300 MCM	500 MCM	2 1/2	3 3/16	1/2
GX80-80	500 MCM	800 MCM	2 3/4	3 9/16	1/2
GX100-100	750 MCM	1000 MCM	3 1/4	4 1/4	5/8

© 2011, AFL, all rights reserved. PP-3-00364, Revision 1, 8.5.13
Specifications are subject to change without notice.

DOSSERT®

TYPE GZ

Grounding Clamp for 3 Cables to Pipe in Parallel

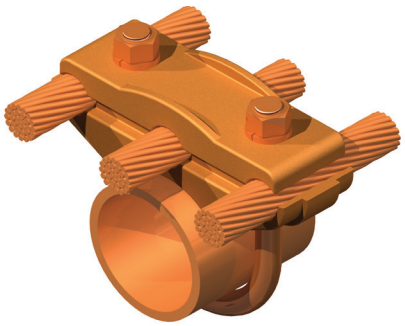

A triple conductor grounding clamp for grounding three wires or cables to the same ground rod or pipe. The high range of variability permits use of a number of conductor sizes for one connector. The high corrosion resistance of the connector permits the entire assembly to be covered with earth after installation is made.

Material

Copper Alloy

Hardware

Everdur U-bolts, nuts and lockwashers

Notes

- For tin plating, add suffix "-SN" to catalog number. EX: GZ125-50-SN
- For stainless steel bolts, lockwashers and Everdur nuts, add suffix "-SSHBN" to catalog number. EX: GZ125-50-SSHBN
- All sizes are not shown. Please contact the factory.

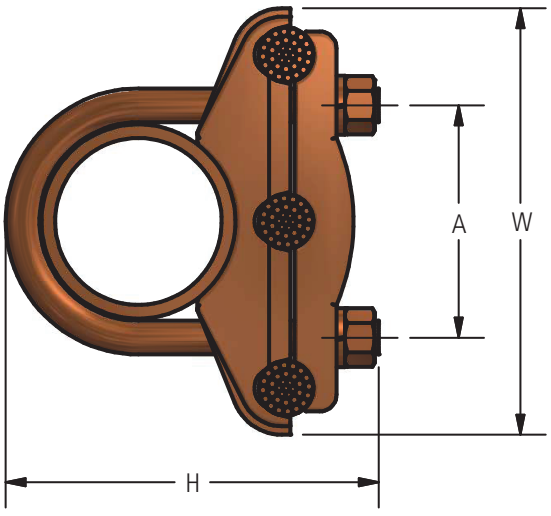

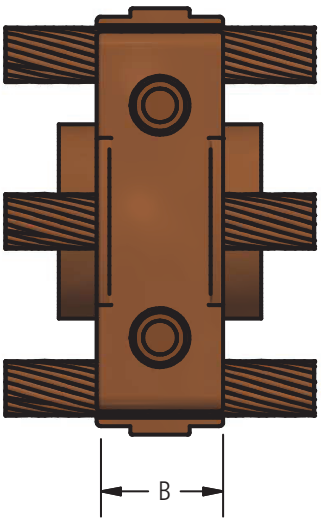

© 2011, AFL, all rights reserved. PP-3-00365, Revision 1, 11.9.18
Specifications are subject to change without notice.

DOSSERT®

TYPE GZ

Grounding Clamp for 3 Cables to Pipe in Parallel

Ordering Information

CATALOG NUMBER	GROUNDING		CONDUCTOR RANGE		DIMENSIONS IN INCHES				BOLT SIZE
	PIPE SPS	ROD	MIN	MAX	A	B	H	W	
GZ25-4	1/4	1/2	8 Solid	#4 Stranded	1	1 1/2	2 1/16	2 1/4	3/8
GZ25-13	1/4	1/2	4 Solid	2/0 Stranded	1	1 1/2	2 5/16	2 3/4	3/8
GZ25-25	1/4	1/2	2/0 Solid	250 MCM	1 1/8	1 1/2	2 11/16	3 3/16	1/2
GZ38-4	3/8	5/8 or 3/4	8 Solid	#4 Stranded	1 3/16	1 1/2	2 5/8	2 3/4	3/8
GZ38-13	3/8	5/8 or 3/4	4 Solid	2/0 Stranded	1 3/16	1 1/2	2 7/8	3 3/16	3/8
GZ38-25	3/8	5/8 or 3/4	2/0 Solid	250 MCM	1 5/16	1 1/2	3 3/16	3 3/4	1/2
GZ38-50	3/8	5/8 or 3/4	300 MCM	500 MCM	1 5/16	1 5/8	3 7/16	4 3/16	1/2
GZ75-4	1/2 or 3/4	7/8 or 1	8 Solid	#4 Stranded	1 1/2	1 1/2	2 5/8	2 3/4	3/8
GZ75-13	1/2 or 3/4	7/8 or 1	4 Solid	2/0 Stranded	1 1/2	1 1/2	2 7/8	3 3/16	3/8
GZ75-25	1/2 or 3/4	7/8 or 1	2/0 Solid	250 MCM	1 5/8	1 1/2	3 3/16	3 3/4	1/2
GZ75-50	1/2 or 3/4	7/8 or 1	300 MCM	500 MCM	1 5/8	1 5/8	3 7/16	4 3/16	1/2
GZ100-4	1	1 1/8 - 1 1/4	8 Solid	#4 Stranded	1 3/4	1 1/2	2 13/16	2 15/16	3/8
GZ100-13	1	1 1/8 - 1 1/4	4 Solid	2/0 Stranded	1 3/4	1 1/2	3	2 15/16	3/8
GZ100-25	1	1 1/8 - 1 1/4	2/0 Solid	250 MCM	1 7/8	1 1/2	3 7/16	4	1/2
GZ100-50	1	1 1/8 - 1 1/4	300 MCM	500 MCM	1 7/8	1 7/8	3 11/16	4 7/16	1/2
GZ125-4	1 1/4	1 3/8 - 1 5/8	8 Solid	#4 Stranded	2 1/8	1 1/2	3 1/4	3 15/16	3/8
GZ125-13	1 1/4	1 3/8 - 1 5/8	4 Solid	2/0 Stranded	2 1/8	1 1/2	3 7/16	3 3/4	3/8
GZ125-25	1 1/4	1 3/8 - 1 5/8	2/0 Solid	250 MCM	2 1/4	1 1/2	3 13/16	4 3/8	1/2
GZ125-50	1 1/4	1 3/8 - 1 5/8	300 MCM	500 MCM	2 1/4	1 7/8	4 1/8	4 13/16	1/2
GZ150-4	1 1/2	1 5/8 - 1 7/8	8 Solid	#4 Stranded	2 3/8	1 1/2	3 1/2	3 5/8	3/8
GZ150-13	1 1/2	1 5/8 - 1 7/8	4 Solid	2/0 Stranded	2 3/8	1 1/2	3 11/16	4 1/16	3/8
GZ150-25	1 1/2	1 5/8 - 1 7/8	2/0 Solid	250 MCM	2 1/2	1 1/2	4 1/8	4 11/16	1/2
GZ150-50	1 1/2	1 5/8- 1 7/8	300 MCM	500 MCM	2 1/2	1 7/8	4 3/8	5 1/8	1/2
GZ200-4	2	2 - 2 1/2	8 Solid	#4 Stranded	2 13/16	1 1/2	4 1/16	4 1/16	3/8
GZ200-13	2	2 - 2 1/2	4 Solid	2/0 Stranded	2 13/16	1 1/2	4 5/16	4 1/2	3/8
GZ200-25	2	2 - 2 1/2	2/0 Solid	250 MCM	2 15/16	1 1/2	4 11/16	5 1/8	1/2
GZ200-50	2	2 - 2 1/2	300 MCM	500 MCM	2 15/16	1 7/8	4 15/16	5 9/16	1/2
GZ250-4	2 1/2	2 5/8 - 2 7/8	8 Solid	#4 Stranded	3 5/16	1 1/2	4 3/4	4 9/16	3/8
GZ250-13	2 1/2	2 5/8 - 2 7/8	4 Solid	2/0 Stranded	3 5/16	1 1/2	5	5	3/8
GZ250-25	2 1/2	2 5/8 - 2 7/8	2/0 Solid	250 MCM	3 7/16	1 1/2	5 3/8	5 5/8	1/2
GZ250-50	2 1/2	2 5/8 - 2 7/8	300 MCM	500 MCM	3 7/16	1 7/8	5 5/8	6 1/16	1/2
GZ300-4	3	3 1/4 - 3 1/2	8 Solid	#4 Stranded	4	1 1/2	5 3/8	5 3/16	3/8
GZ300-13	3	3 1/4 - 3 1/2	4 Solid	2/0 Stranded	4	1 1/2	5 3/8	5 5/8	3/8
GZ300-25	3	3 1/4 - 3 1/2	2/0 Solid	250 MCM	4 1/8	1 1/2	6	6 1/4	1/2
GZ300-50	3	3 1/4 - 3 1/2	300 MCM	500 MCM	4 1/8	1 7/8	6 1/4	6 11/16	1/2
GZ300-75	3	3 1/4 - 3 1/2	500 MCM	750 MCM	4 1/4	2 1/4	6 1/2	7 3/16	5/8
GZ350-13	3 1/2	3 3/4 - 4	4 Solid	2/0 Stranded	4 7/16	1 1/2	5 13/16	6	3/8
GZ400-13	4	4 1/4 - 4 1/2	4 Solid	2/0 Stranded	-	-	-	-	3/8
GZ400-25	4	4 1/4 - 4 1/2	2/0 Solid	250 MCM	-	-	-	-	1/2
GZ400-50	4	4 1/4 - 4 1/2	300 MCM	500 MCM	-	-	-	-	1/2

© 2011, AFL, all rights reserved. PP-3-00365, Revision 1, 11.9.18
Specifications are subject to change without notice.

DOSSERT®

Type MTRC, MTR2C, and MTR3C

Multiple Tie Transformer Connector

A multiple tie transformer connector which provides a convenient means of connecting a number of cables to a single transformer terminal. Allows maximum conductor sizes to be run directly to the transformer, thereby minimizing voltage drop.

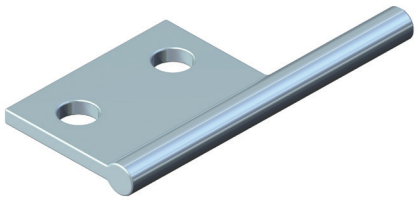

Material

Tin plated copper

Hardware

- MTR2C: Four hole NEMA standard drilled contact.
- MTR3C: Six hole NEMA standard drilled contact.

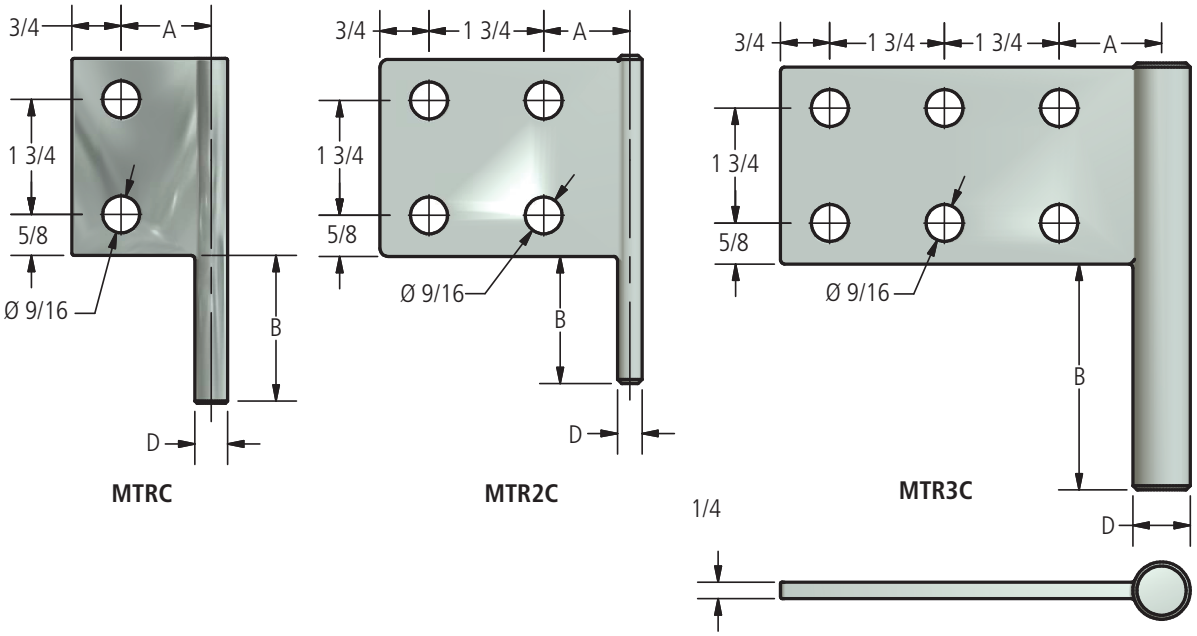

Ordering Information

CATALOG NUMBER			DIMENSIONS IN INCHES		
MTRC	MTR2C	MTR3C	A	B	D
MTRC-38	MTR2C-38	MTR3C-38	1 3/8	2	3/8
MTRC-56	MTR2C-56	MTR3C-56	1 1/2	2 1/4	9/16
MTRC-75	MTR2C-75	MTR3C-75	1 9/16	2 3/4	3/4
MTRC-88	MTR2C-88	MTR3C-88	1 5/8	3 1/2	7/8
MTRC-112	MTR2C-112	MTR3C-112	1 3/4	4	1 1/8

© 2011, AFL, all rights reserved. PP-3-00386, Revision 0, 3.8.11
Specifications are subject to change without notice.

DOSSERT®

TYPE Q2TE, Q3TE, Q4TE

Cast Copper multiple tee connector for securing a number of cables to a single transformer terminal.

A cast type multiple tee connector for securing a number of cables to a single transformer terminal. Each cable clamping position is designed to receive a wide range of conductor sizes. Installation of each cable is simply accomplished by insertion of cable into eyebolt member and tightening nut with a single wrench. Body is of high conductivity copper alloy and eyebolt elements are of high strength bronze with silicon bronze nuts and lockwashers.

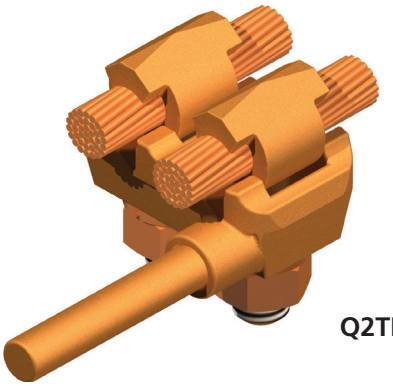

Q2TE

Material

Copper Alloy

Hardware

Everdur nut and lockwashers.

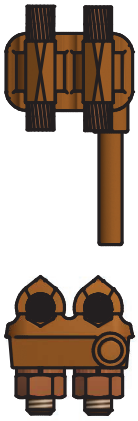

Q2TE

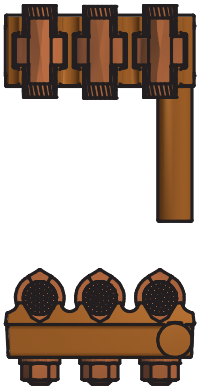

Q3TE

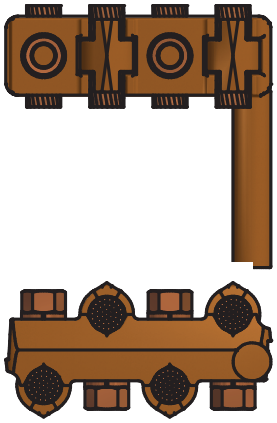

Q4TE

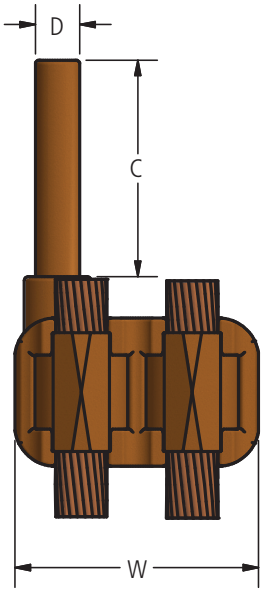

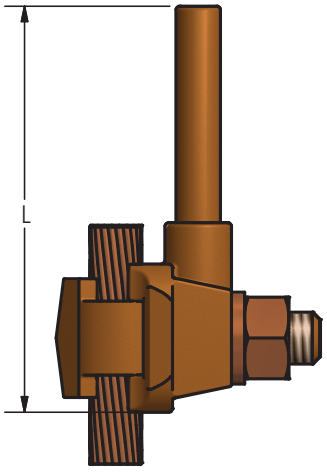

© 2011, AFL, all rights reserved. PP-3-00423, Revision 0, 3.8.11
Specifications are subject to change without notice.

DOSSERT®

TYPE Q2TE, Q3TE, Q4TE

Cast Copper multiple tee connector for securing a number of cables to a single transformer terminal.

Ordering Information

CATALOG NUMBER	CABLE RANGE	DIMENSIONS IN INCHES			
		C	D	L	W
Q2TE-13	8 Solid- 2/0 Stranded	2	3/8	3 5/8	2 1/8
Q3TE-13	8 Solid- 2/0 Stranded	2	3/8	3 5/8	3 1/4
Q4TE-13	8 Solid- 2/0 Stranded	2	3/8	3 5/8	3 3/4
Q2TE-25	6 Solid- 250 kcmil	2 1/4	9/16	4 1/8	2 5/8
Q3TE-25	6 Solid- 250 kcmil	2 1/4	9/16	4 1/8	3 7/8
Q4TE-25	6 Solid- 250 kcmil	2 1/4	9/16	4 1/8	4 1/2
Q2TE-35	2 Solid- 350 kcmil	2 3/4	3/4	4 1/2	2 3/4
Q3TE-35	2 Solid- 350 kcmil	2 3/4	3/4	4 1/2	4 1/8
Q4TE-35	2 Solid- 350 kcmil	2 3/4	3/4	4 1/2	4 7/8
Q2TE-50	1/0 Solid- 500 kcmil	3 1/2	7/8	5 3/4	3 1/8
Q3TE-50	1/0 Solid- 500 kcmil	3 1/2	7/8	5 3/4	4 7/8
Q4TE-50	1/0 Solid- 500 kcmil	3 1/2	7/8	5 3/4	5 7/8
Q2TE-100	2/0 Solid- 1000 kcmil	4	1 1/8	6 3/8	4
Q3TE-100	2/0 Solid- 1000 kcmil	4	1 1/8	6 3/8	5 7/8
Q4TE-100	2/0 Solid- 1000 kcmil	4	1 1/8	6 3/8	7 5/8

© 2011, AFL, all rights reserved. PP-3-00423, Revision 0, 3.8.11
Specifications are subject to change without notice.

DOSSERT®

TYPE Q2TS, Q3TS, Q4TS

Cast Copper multiple tee connector for securing a number of cables to a single transformer terminal.

A cast type multiple tee connector for securing a number of cables to a single transformer terminal. Each cable clamping position is designed to receive a wide range of conductor sizes. Installation of each cable is simply accomplished by insertion of cable into eyebolt member and tightening nut with a single wrench. Body is of high conductivity copper alloy and eyebolt elements are of high strength bronze with silicon bronze nuts and lockwashers.

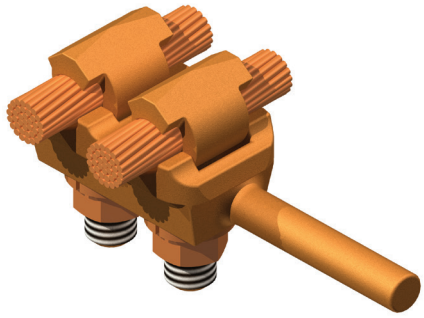

Q2TS

Material

Copper Alloy

Hardware

Everdur nut and lockwashers.

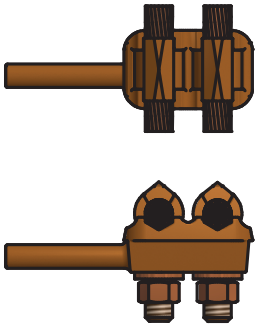

Q2TS

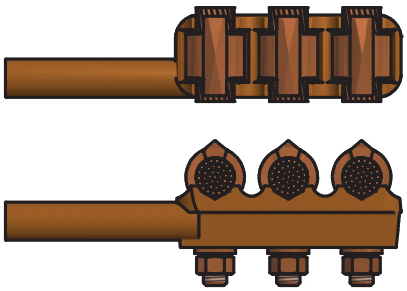

Q3TS

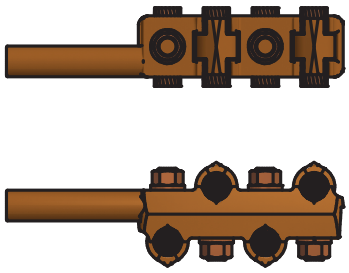

Q4TS

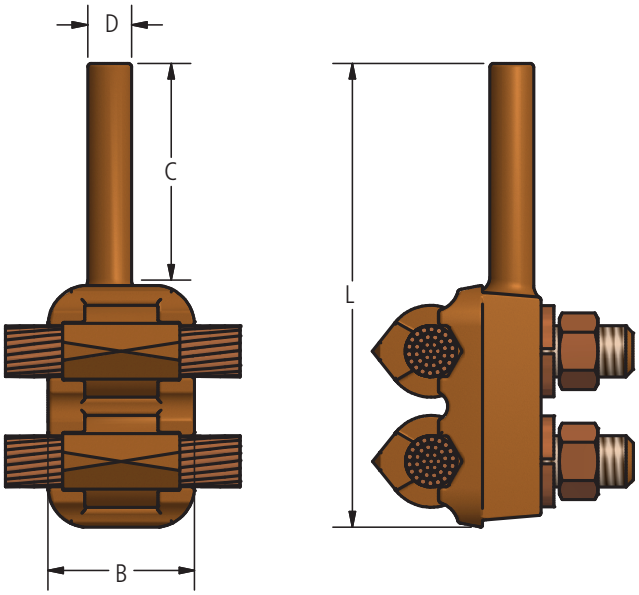

© 2011, AFL, all rights reserved. PP-3-00424, Revision 1, 1.5.2023
Specifications are subject to change without notice.

DOSSERT®

TYPE Q2TS, Q3TS, Q4TS

Cast Copper multiple tee connector for securing a number of cables to a single transformer terminal.

Ordering Information

CATALOG NUMBER	CABLE RANGE	DIMENSIONS IN INCHES			
		B	C	D	L
Q2TS-13	8 Solid- 2/0 Stranded	1 1/2	2	3/8	4 3/8
Q3TS-13	8 Solid- 2/0 Stranded	1 1/2	2	3/8	5 1/4
Q4TS-13	8 Solid- 2/0 Stranded	1 1/2	2	3/8	6 1/8
Q2TS-25	6 Solid- 250 kcmil	1 5/8	2 1/4	9/16	5
Q3TS-25	6 Solid- 250 kcmil	1 5/8	2 1/4	9/16	6 3/8
Q4TS-25	6 Solid- 250 kcmil	1 5/8	2 1/4	9/16	7 1/8
Q2TS-35	2 Solid- 350 kcmil	1 11/16	2 3/4	3/4	5
Q3TS-35	2 Solid- 350 kcmil	1 11/16	2 3/4	3/4	6 3/8
Q4TS-35	2 Solid- 350 kcmil	1 11/16	2 3/4	3/4	7 1/8
Q2TS-50	1/0 Solid- 500 kcmil	1 3/4	4	7/8	7 1/4
Q3TS-50	1/0 Solid- 500 kcmil	2 1/8	3 1/2	7/8	8 1/2
Q4TS-50	1/0 Solid- 500 kcmil	2 1/8	3 1/2	7/8	9 1/8
Q2TS-100	2/0 Solid- 1000 kcmil	2 1/4	4	1 1/8	8 1/8
Q3TS-100	2/0 Solid- 1000 kcmil	2 1/4	4	1 1/8	10 1/8
Q4TS-100	2/0 Solid- 1000 kcmil	2 1/4	4	1 1/8	11 7/8

© 2011, AFL, all rights reserved. PP-3-00424, Revision 1, 1.5.2023
Specifications are subject to change without notice.

DOSSERT®

TYPE TGC

Grounding Connector For Cable To Transformer Ground Pad

This connector is designed for transformer grounding pads. Connector stud possesses a slight taper to insure sound electrical contact without need for locking devices. Designed specifically for use on all standard EE-1-NEMA distribution transformers.

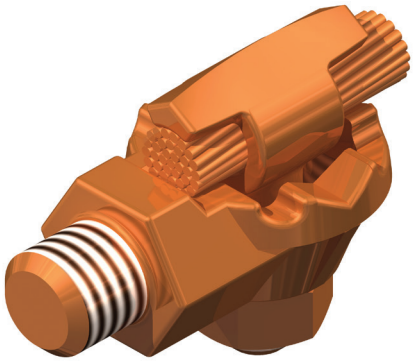

Material

Copper Alloy

Hardware

Everdur nuts and lockwashers

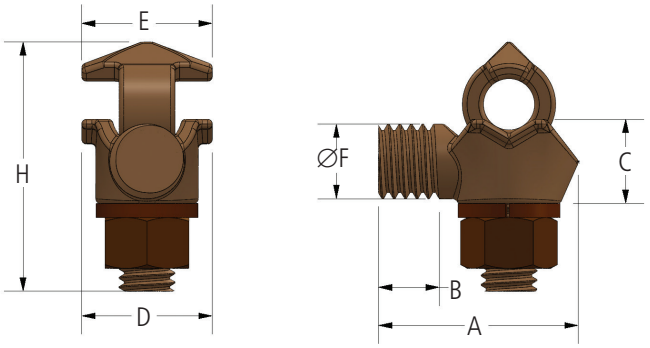

FIG. 1

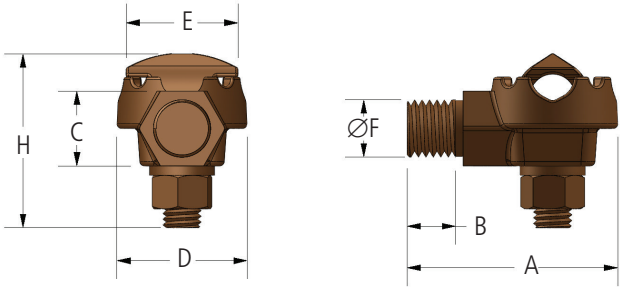

FIG. 2

Ordering Information

CATALOG NO.	FIG. NO.	ACSR RANGE		DIMENSIONS IN INCHES							BOLT SIZE
		MIN	MAX	A	B	C	D	E	F	H	
TGC8-50	1	#10 SOL	#1 STR	1 3/8	11/32	9/16	7/8	7/8	1/2"-13	1 5/8	3/8
TGC13-50P	2	#8 SOL	2/0 STR	2 11/16	3/8	3/4	1 13/64	1 1/8	1/2"-13	1 4/5	3/8
TGC25-50	2	#6 STR	250 MCM	2 3/8	3/8	3/4	1 9/16	1 1/2	1/2"-13	2 11/32	1/2
TGC25-75	2	#6 STR	250 MCM	2 13/16	21/32	1	1 3/4	1 1/2	3/4"-10	2 11/32	1/2

© 2011, AFL, all rights reserved. PP-3-00476, Revision 1, 1.30.19
Specifications are subject to change without notice.

DOSSERT®

TYPE HSC, HS2C, HS3C

Copper Stud Connector for Cable or Wire. HSC connects one conductor to a stud, HS2C connects two conductors to a stud, and HS3C connects three conductors to a stud.

A HERCULON™ variable type connector for joining a cable or a wire to a threaded stud. The stud end of the connector can also be furnished to accommodate a plain stud or pipe.

Material

Copper Alloy

Hardware

Everdur bolts, nuts and lockwashers

Notes

- Other sizes of studs and various threads to the inch can be promptly furnished.
- For two 500 MCM cables to a .75" T16 stud order HS2C75-50-T16
- For three 500 MCM cables to a .75" T16 stud order HS3C75-50-T16
- For two 500 MCM cables to a .75" T0 stud order HS2C75-50-T0

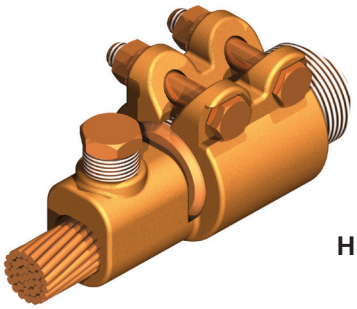

HSC

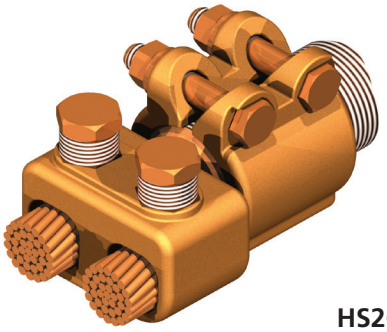

HS2C

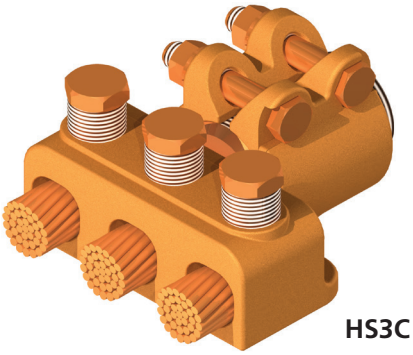

HS3C

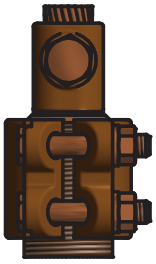

HSC

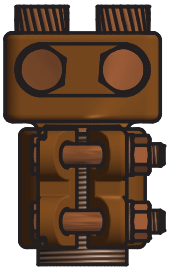

HS2C

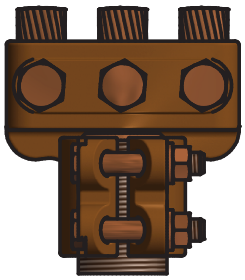

HS3C

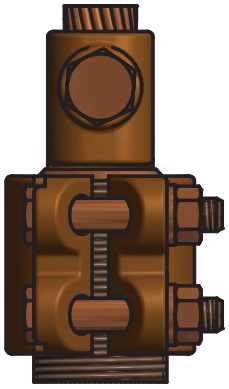

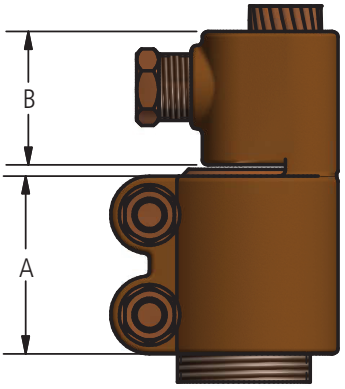

© 2011, AFL, all rights reserved. PP-3-00376, Revision 1, 8.7.13
Specifications are subject to change without notice.

DOSSERT®

TYPE HSC, HS2C, HS3C

Copper Stud Connector for Cable or Wire. HSC connects one conductor to a stud, HS2C connects two conductors to a stud, and HS3C connects three conductors to a stud.

Ordering Information

CATALOG NUMBER			STUD DIA	THREADS PER INCH	CABLE RANGE		DIMENSIONS IN INCHES		BOLT SIZE
HSC	HS2C	HS3C			MIN	MAX	A	B	
HSC50-4-T13	HS2C50-4-T13	HS3C50-4-T13	1/2	13	8 Solid	4 Stranded	2	5/8	3/8
HSC50-8-T13	HS2C50-8-T13	HS3C50-8-T13	1/2	13	4 Solid	1 Stranded	2	7/8	3/8
HSC50-13-T13	HS2C50-13-T13	HS3C50-13-T13	1/2	13	1 Stranded	2/0 Stranded	2	1	3/8
HSC50-21-T13	HS2C50-21-T13	HS3C50-21-T13	1/2	13	2/0 Stranded	4/0 Stranded	2	1 1/8	3/8
HSC63-13-T18	HS2C63-13-T18	HS3C63-13-T18	5/8	18	1 Stranded	2/0 Stranded	2	1	3/8
HSC63-21-T18	HS2C63-21-T18	HS3C63-21-T18	5/8	18	2/0 Stranded	4/0 Stranded	2	1 1/8	3/8
HSC63-30-T18	HS2C63-30-T18	HS3C63-30-T18	5/8	18	4/0 Stranded	300 MCM	2	1 9/32	3/8
HSC75-13-T16	HS2C75-13-T16	HS3C75-13-T16	3/4	16	1 Stranded	2/0 Stranded	2	1	3/8
HSC75-21-T16	HS2C75-21-T16	HS3C75-21-T16	3/4	16	2/0 Stranded	4/0 Stranded	2	1 1/8	3/8
HSC75-30-T16	HS2C75-30-T16	HS3C75-30-T16	3/4	16	4/0 Stranded	300 MCM	2	1 9/32	3/8
HSC75-50-T16	HS2C75-50-T16	HS3C75-50-T16	3/4	16	300 MCM	500 MCM	2	1 1/2	3/8
HSC100-13-T14	HS2C100-13-T14	HS3C100-13-T14	1	14	1 Stranded	2/0 Stranded	2	1	3/8
HSC100-21-T14	HS2C100-21-T14	HS3C100-21-T14	1	14	2/0 Stranded	4/0 Stranded	2	1 1/8	3/8
HSC100-30-T14	HS2C100-30-T14	HS3C100-30-T14	1	14	4/0 Stranded	300 MCM	2	1 9/32	3/8
HSC100-50-T14	HS2C100-50-T14	HS3C100-50-T14	1	14	300 MCM	500 MCM	2	1 1/2	3/8
HSC100-75-T14	HS2C100-75-T14	HS3C100-75-T14	1	14	500 MCM	750 MCM	2	1 5/8	3/8
HSC125-21-T12	HS2C125-21-T12	HS3C125-21-T12	1 1/4	12	2/0 Stranded	4/0 Stranded	2	1 1/8	3/8
HSC125-30-T12	HS2C125-30-T12	HS3C125-30-T12	1 1/4	12	4/0 Stranded	300 MCM	2	1 9/32	3/8
HSC125-50-T12	HS2C125-50-T12	HS3C125-50-T12	1 1/4	12	300 MCM	500 MCM	2	1 1/2	3/8
HSC125-75-T12	HS2C125-75-T12	HS3C125-75-T12	1 1/4	12	500 MCM	750 MCM	2	1 5/8	3/8
HSC125-100-T12	HS2C125-100-T12	HS3C125-100-T12	1 1/4	12	750 MCM	1000 MCM	2 3/4	1 15/16	1/2
HSC150-30-T12	HS2C150-30-T12	HS3C150-30-T12	1 1/2	12	4/0 Stranded	300 MCM	2	1 9/32	3/8
HSC150-50-T12	HS2C150-50-T12	HS3C150-50-T12	1 1/2	12	300 MCM	500 MCM	2	1 1/2	3/8
HSC150-75-T12	HS2C150-75-T12	HS3C150-75-T12	1 1/2	12	500 MCM	750 MCM	2	1 5/8	3/8
HSC150-100-T12	HS2C150-100-T12	HS3C150-100-T12	1 1/2	12	750 MCM	1000 MCM	2 3/4	1 15/16	1/2

© 2011, AFL, all rights reserved. PP-3-00376, Revision 1, 8.7.13
Specifications are subject to change without notice.

DOSSERT®

TYPE HSC-90

Copper Stud Connector for Cable or Wire

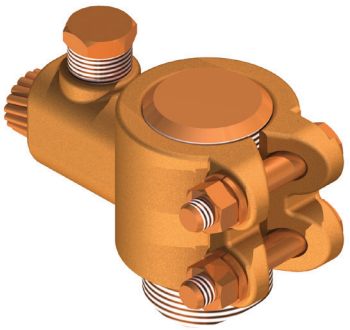

A HERCULON™ variable type connector for joining a cable or a wire to a threaded stud. The stud end of the connector can also be furnished to accommodate a plain stud or pipe.

Material

Cast Copper Alloy

Hardware

Everdur bolts, nuts and lockwashers

Notes

- Other sizes of studs and various threads to the inch can be promptly furnished.
- For a 500 MCM cables to a .75" T16 stud at 90° order HSC75-50-90-T16
- For a 500 MCM cable to a .75" T0 stud at 90° order HSC75-50-90-T0

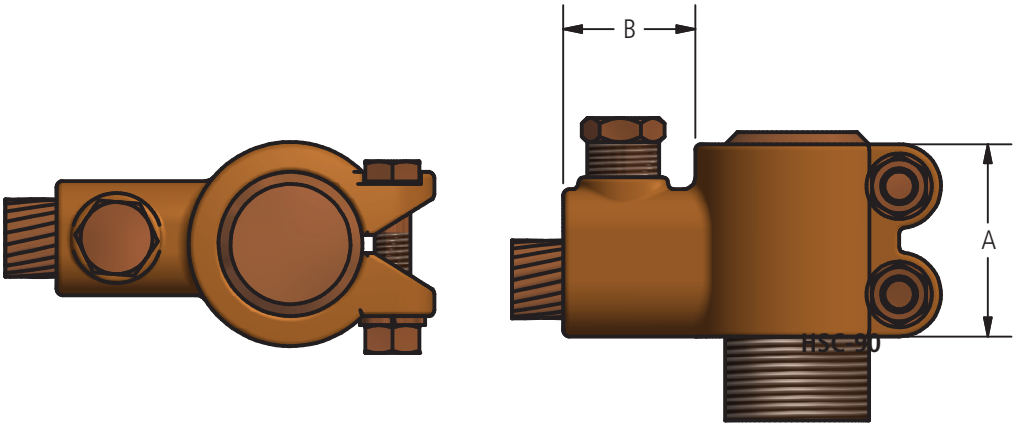

Ordering Information

CATALOG NUMBER	STUD DIA	THREADS PER INCH	CABLE RANGE		DIMENSIONS IN INCHES		BOLT SIZE
			MIN	MAX	A	B	
HSC50-4-90-T13	1/2	13	8 Solid	4 Stranded	2	5/8	3/8
HSC50-8-90-T13	1/2	13	4 Solid	1 Stranded	2	7/8	3/8
HSC50-13-90-T13	1/2	13	1 Stranded	2/0 Stranded	2	1	3/8
HSC50-21-90-T13	1/2	13	2/0 Stranded	4/0 Stranded	2	1 1/8	3/8
HSC63-13-90-T18	5/8	18	1 Stranded	2/0 Stranded	2	1	3/8
HSC63-21-90-T18	5/8	18	2/0 Stranded	4/0 Stranded	2	1 1/8	3/8
HSC63-30-90-T18	5/8	18	4/0 Stranded	300 MCM	2	1 9/32	3/8
HSC75-13-90-T16	3/4	16	1 Stranded	2/0 Stranded	2	1	3/8
HSC75-21-90-T16	3/4	16	2/0 Stranded	4/0 Stranded	2	1 1/8	3/8
HSC75-30-90-T16	3/4	16	4/0 Stranded	300 MCM	2	1 9/32	3/8
HSC75-50-90-T16	3/4	16	300 MCM	500 MCM	2	1 1/2	3/8
HSC100-13-90-T14	1	14	1 Stranded	2/0 Stranded	2	1	3/8
HSC100-21-90-T14	1	14	2/0 Stranded	4/0 Stranded	2	1 1/8	3/8
HSC100-30-90-T14	1	14	4/0 Stranded	300 MCM	2	1 9/32	3/8
HSC100-50-90-T14	1	14	300 MCM	500 MCM	2	1 1/2	3/8
HSC100-75-90-T14	1	14	500 MCM	750 MCM	2	1 5/8	3/8
HSC125-21-90-T12	1 1/4	12	2/0 Stranded	4/0 Stranded	2	1 1/8	3/8
HSC125-30-90-T12	1 1/4	12	4/0 Stranded	300 MCM	2	1 9/32	3/8
HSC125-50-90-T12	1 1/4	12	300 MCM	500 MCM	2	1 1/2	3/8
HSC125-75-90-T12	1 1/4	12	500 MCM	750 MCM	2	1 5/8	3/8
HSC125-100-90-T12	1 1/4	12	750 MCM	1000 MCM	2 3/4	1 15/16	1/2
HSC150-30-90-T12	1 1/2	12	4/0 Stranded	300 MCM	2	1 9/32	3/8
HSC150-50-90-T12	1 1/2	12	300 MCM	500 MCM	2	1 1/2	3/8
HSC150-75-90-T12	1 1/2	12	500 MCM	750 MCM	2	1 5/8	3/8
HSC150-100-90-T12	1 1/2	12	750 MCM	1000 MCM	2 3/4	1 15/16	1/2

© 2011, AFL, all rights reserved. PP-3-00377, Revision 1, 8.5.13
Specifications are subject to change without notice.

DOSSERT®

TYPE NP, NF
Copper Contact Nuts

Contact nuts for clamping flat bus bars or terminal pads to threaded studs. For greater contact surface flange nuts, Type NF, provide additional area. Designed to conduct the full rated load of the stud. Large face areas offer a high electrical contact efficiency. All nuts are machined to a high percent full thread to effect maximum thread bearing area.

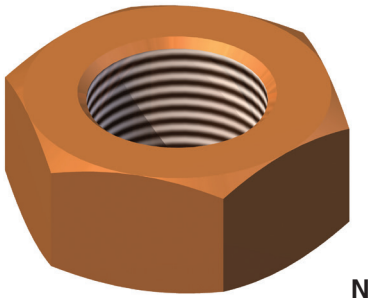

NP

Material

Copper Alloy

Note

- Other numbers of threads per inch can be furnished for any given stud diameter upon specification.

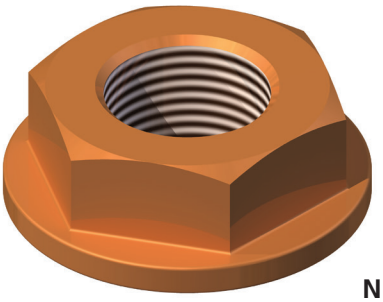

NF

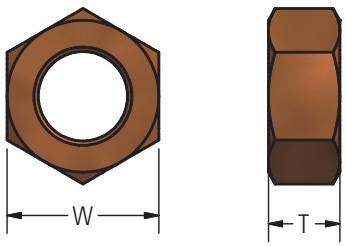

TYPE NP

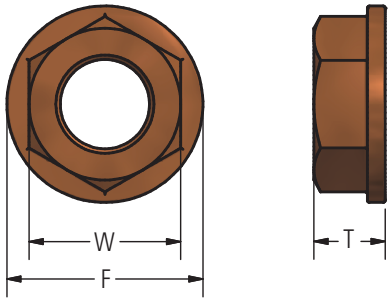

TYPE NF

Ordering Information

CATALOG NUMBER		STUD DIAMETER	THREADS PER INCH	DIMENSIONS IN INCHES		
NP	NF			F	T	W
NP31	NF31	5/16	18	3/4	1/4	5/8
NP38	NF38	3/8	16	7/8	5/16	3/4
NP50	NF50	1/2	13	1 1/8	3/8	7/8
NP62	NF62	5/8	18	1 3/8	1/2	1 1/16
NP75	NF75	3/4	16	1 5/8	5/8	1 1/4
NP87	NF87	7/8	14	1 13/16	11/16	1 3/8
NP100	NF100	1	14	1 15/16	3/4	1 1/2
NP112	NF112	1 1/8	12	2 1/4	13/16	1 3/4
NP125	NF125	1 1/4	12	2 1/2	7/8	2
NP150	NF150	1 1/2	12	2 15/16	15/16	2 3/8
NP175	NF175	1 3/4	12	2 3/8	1	2 11/16
NP200	NF200	2	12	3 3/4	1 1/8	3
NP250	NF250	2 1/2	12	4 9/26	1 1/4	3 11/16
NP300	NF300	3	12	5 3/8	1 1/2	4 5/16
NP350	NF350	3 1/2	12	6 1/4	1 3/4	5
NP400	NF400	4	12	6 3/4	2	5 1/2

© 2011, AFL, all rights reserved. PP-3-00387, Revision 1, 9.2.11
Specifications are subject to change without notice.

DOSSERT®

TYPE SCX, S2CX

Copper Stud Connector for Cable

SCX connects one cable to one stud and S2CX connects two cables on one stud. A variable conductor stud connector which takes a wide range of cable sizes in line or in a 90° position. The reversible cap permits optimum clamping for all cable sizes within the assigned ranges. In addition, one flat surface on SCX can be machined to accommodate flat bar conductors. SCX can be furnished upon request in type SCX-N with bolt holes to accommodate NEMA standard bar drilling.

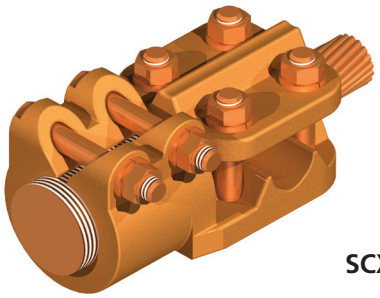

SCX

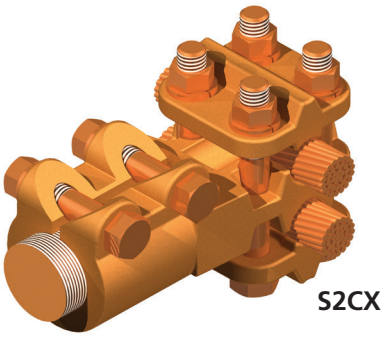

S2CX

Material

Copper Alloy

Hardware

Everdur bolts, nuts and lockwashers

Note

- For a 1" T14 stud, and two 1000 MCM cables order S2CX100-100-T14

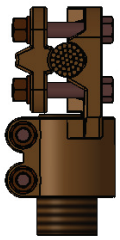

SCX

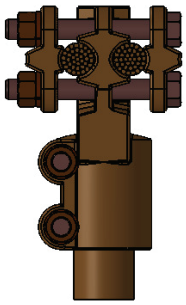

S2CX

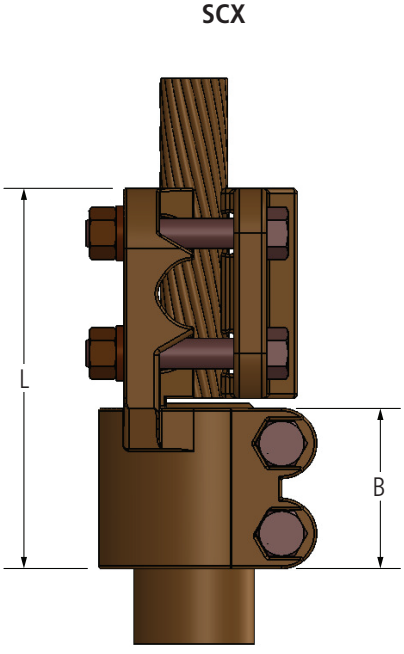

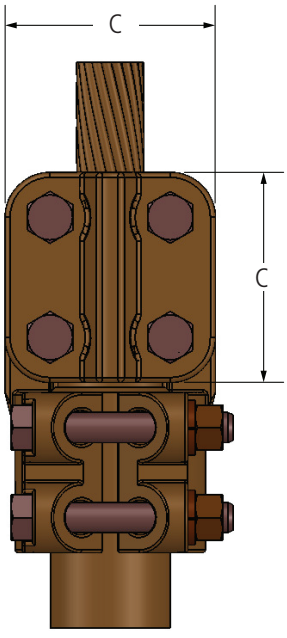

continued

© 2011, AFL, all rights reserved. PP-3-00451, Revision 6, 3.16.2022
Specifications are subject to change without notice.

DOSSERT®

TYPE SCX, S2CX

Copper Stud Connector for Cable

Ordering Information

CATALOG NUMBERS	STUD DIA.	THREADS PER INCH	CABLE RANGE		SPS RANGE		DIMENSIONS IN INCHES			BOLT SIZE	
			SMALL GROOVE	LARGE GROOVE	SMALL GROOVE	LARGE GROOVE	B	C	L	STUD	TAP
SCX50-21-T13	1/2	13	6 Sol.-1 Stranded	1 Stranded-4/0	-	-	2	2	4 5/8	3/8	3/8
SCX75-21-T16	3/4	16	6 Sol.-1 Stranded	1 Stranded-4/0	-	-	2	2	4 5/8	3/8	3/8
SCX75-50-T16	3/4	16	6 Solid-4/0	4/0-500 MCM	3/8	1/2	2	2 1/4	4 7/8	3/8	5/8
SCX75-100-T16	3/4	16	2 Solid-350 MCM	350 MCM-1000 MCM	3/8	3/4	2	2 1/2	5 1/8	3/8	3/8
SCX100-50-T12	1	12	6 Solid-4/0	4/0-500 MCM	3/8	1/2	2	2 1/4	4 7/8	3/8	3/8
SCX100-50-T14	1	14	6 Solid-4/0	4/0-500 MCM	3/8	1/2	2	2 1/4	4 7/8	3/8	3/8
SCX100-50-T0	1	0	6 Solid-4/0	4/0-500 MCM	3/8	1/2	2	2 1/4	4 7/8	3/8	3/8
SCX100-100-T12	1	12	2 Solid-350 MCM	350 MCM-1000 MCM	3/8	3/4	2 1/2	2 7/8	6 3/8	1/2	1/2
SCX100-100-T14	1	14	2 Solid-350 MCM	350 MCM-1000 MCM	3/8	3/4	2 1/2	2 7/8	6 3/8	1/2	1/2
SCX112-50-T12	1 1/8	12	6 Solid-4/0	4/0-500 MCM	3/8	1/2	2	2 1/4	4 7/8	3/8	3/8
SCX112-100-T12	1 1/8	12	2 Solid-350 MCM	350 MCM-1000 MCM	3/8	3/4	2 3/4	2 7/8	6 3/8	1/2	1/2
SCX112-200-T12	1 1/8	12	4/0-795 MCM	795 MCM-2000 MCM	3/8	1 1/4	2 3/4	3 3/8	6 3/4	1/2	1/2
SCX118-200-T0	1 3/16	0	4/0-900 MCM	900 MCM-2000 MCM	3/8	1 1/4	2 3/4	3 3/8	6 5/8	1/2	1/2
SCX125-50-T12	1 1/4	12	6 Solid-4/0	4/0-500 MCM	3/8	1/2	2	2 1/4	4 7/8	3/8	3/8
SCX125-100-T12	1 1/4	12	2 Solid-350 MCM	350 MCM-1000 MCM	3/8	3/4	2 3/4	2 7/8	6 3/8	1/2	1/2
SCX125-200-T12	1 1/4	12	2 Solid-350 MCM	900 MCM-2000 MCM	3/8	1 1/4	2 3/4	3 3/8	6 5/8	1/2	1/2
SCX150-50-T12	1 1/2	12	6 Solid-4/0	4/0-500 MCM	3/8	1/2	2	2 1/4	4 7/8	3/8	3/8
SCX150-100-T12	1 1/2	12	2 Solid-350 MCM	350 MCM-1000 MCM	3/8	3/4	2 3/4	2 7/8	6 3/8	1/2	1/2
SCX150-200-T12	1 1/2	12	4/0-900 MCM	900 MCM-2000 MCM	3/8	1 1/4	2 3/4	3 3/8	6 3/4	1/2	1/2
SCX175-50-T12	1 3/4	12	6 Solid-4/0	4/0-500 MCM	3/8	1/2	2	2 1/4	4 5/8	3/8	3/8
SCX175-100-T12	1 3/4	12	2 Solid-350 MCM	350 MCM-1000 MCM	3/8	3/4	2 3/4	2 7/8	6 1/2	1/2	1/2
SCX175-200-T12	1 3/4	12	4/0-900 MCM	900 MCM-2000 MCM	3/8	1 1/4	2 3/4	3 3/8	6 5/8	1/2	1/2
SCX200-50-T12	2	12	6 Solid-4/0	4/0-500 MCM	3/8	1/2	2 1/4	2 1/4	5 1/4	3/8	3/8
SCX200-100-T12	2	12	2 Solid-350 MCM	350 MCM-1000 MCM	3/8	3/4	2 3/4	2 7/8	6	1/2	1/2
SCX200-200-T12	2	12	4/0-900 MCM	900 MCM-2000 MCM	3/8	1 1/4	2 3/4	3 3/8	6 5/8	1/2	1/2
SCX225-50-T12	2 1/4	12	6 Solid-4/0	4/0-500 MCM	3/8	1/2	2	2 1/4	4 5/8	3/8	3/8
SCX225-100-T12	2 1/4	12	2 Solid-350 MCM	350 MCM-1000 MCM	3/8	3/4	2 3/4	2 7/8	6	1/2	1/2
SCX225-200-T12	2 1/4	12	4/0-900 MCM	900 MCM-2000 MCM	3/8	1 1/4	2 3/4	3 3/8	6 5/8	1/2	1/2
SCX250-50-T12	2 1/2	12	6 Solid-4/0	4/0-500 MCM	3/8	1/2	2	2 1/4	4 5/8	3/8	3/8
SCX250-100-T12	2 1/2	12	2 Solid-350 MCM	350 MCM-1000 MCM	3/8	3/4	2 3/4	2 7/8	6	1/2	1/2
SCX250-200-T12	2 1/2	12	4/0-900 MCM	900 MCM-2000 MCM	3/8	1 1/4	2 3/4	3 3/8	6 5/8	1/2	1/2
SCX300-50-T12	3	12	6 Solid-4/0	4/0-500 MCM	3/8	1/2	2	2 1/4	4 5/8	5/8	3/8
SCX300-100-T12	3	12	2 Solid-350 MCM	350 MCM-1000 MCM	3/8	3/4	2 3/4	2 7/8	6	5/8	1/2
SCX300-200-T12	3	12	4/0-900 MCM	900 MCM-2000 MCM	3/8	1 1/4	2 3/4	3 3/8	6 5/8	1/2	1/2

© 2011, AFL, all rights reserved. PP-3-00451, Revision 6, 3.16.2022
Specifications are subject to change without notice.

DOSSERT®

TYPE SP, SP-90

Stud Connector For Tube To Threaded Stud

A connector for joining a tubular bus conductor to a threaded stud. The stud end can be threaded to any specified number of threads per inch or bored for an unthreaded stud.

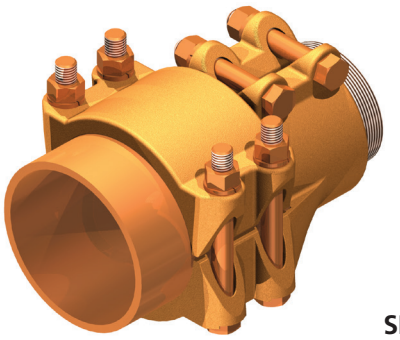

SP

Material

Copper Alloy

Hardware

Everdur bolts, nuts and lockwashers

Notes

- For Stud threads not listed, add suffix 'T' and the number of threads per inch to category number. Ex: For a 1 1/8" stud to a 1 1/4" bus, 90°, without threads order SP112-125-T0-90.
- For a 1 1/8" stud to a 1 1/4" bus, straight , without threads, order SP112-125-T0.

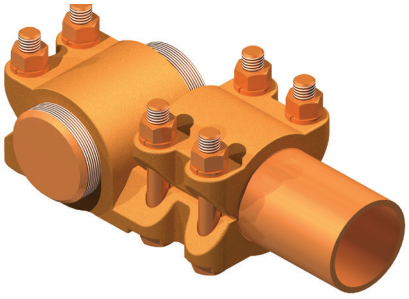

SP-90

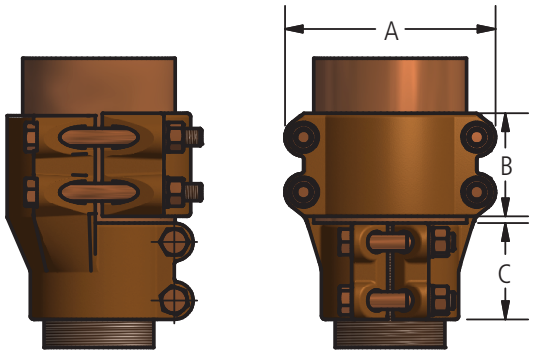

SP

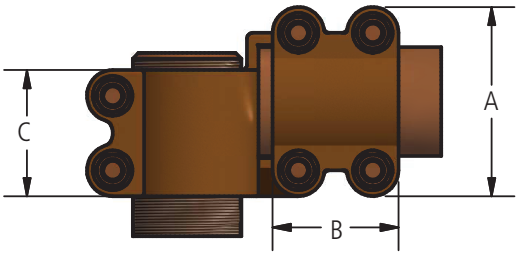

SP-90

Ordering Information

CATALOG NUMBER		STUD DIAMETER	THREADS PER INCH	SPS	DIMENSIONS IN INCHES			BOLT SIZE
SP	SP-90				A	B	C	
SP50-50-T13	SP50-50-T13-90	1/2	13	1/2	2 1/4	2	2	3/8
SP50-75-T13	SP50-75-T13-90	1/2	13	3/4	2 7/16	2	2	3/8
SP50-10-T13	SP50-10-T13-90	1/2	13	1	2 11/16	2 1/8	2	3/8
SP75-50-T16	SP75-50-T16-90	3/4	16	1/2	2 1/4	2	2	3/8
SP75-75-T16	SP75-75-T16-90	3/4	16	3/4	2 7/16	2	2	3/8
SP75-100-T16	SP75-100-T16-90	3/4	16	1	2 11/16	2 1/8	2	3/8
SP75-125-T16	SP75-125-T16-90	3/4	16	1 1/4	3 7/16	2 1/2	2 1/4	1/2
SP75-150-T16	SP75-150-T16-90	3/4	16	1 1/2	3 5/8	2 5/8	2 1/4	1/2
SP100-50-T14	SP100-50-T14-90	1	14	1/2	2 1/4	2	2	3/8
SP100-75-T14	SP100-75-T14-90	1	14	3/4	2 7/16	2	2	3/8
SP100-100-T14	SP100-100-T14-90	1	14	1	2 11/16	2 1/8	2	3/8
SP100-125-T14	SP100-125-T14-90	1	14	1 1/4	3 7/16	2 1/2	2 1/4	1/2
SP100-150-T14	SP100-150-T14-90	1	14	1 1/2	3 5/8	2 5/8	2 1/4	1/2
SP100-200-T14	SP100-200-T14-90	1	14	2	4 1/8	2 3/4	2 1/4	1/2
SP112-50-T12	SP112-50-T12-90	1 1/8	12	1/2	2 1/4	2	2	3/8
SP112-75-T12	SP112-75-T12-90	1 1/8	12	3/4	2 7/16	2	2	3/8
SP112-100-T12	SP112-100-T12-90	1 1/8	12	1	2 11/16	2 1/8	2	3/8
SP112-125-T12	SP112-125-T12-90	1 1/8	12	1 1/4	3 7/16	2 1/2	2 1/4	1/2
SP125-200-T12	SP125-200-T12-90	1 1/4	12	2	4 1/8	2 3/4	2 3/4	1/2

© 2011, AFL, all rights reserved. PP-3-00460, Revision 1, 1.25.18
Specifications are subject to change without notice.

DOSSERT®

TYPE SX-A, SX-A-90

Stud Expansion Connector for Pipe

Both SX-A and SX-A-90 connect copper stud to aluminum bus.

An expansion stud connector for joining a tubular bus to a threaded or unthreaded, transformer or terminal, stud. The movements of the conductors caused by thermal expansion and contraction or settling foundations are efficiently absorbed by the flexible braided linkages. Type SX is furnished with an alignment guide for connections where axial alignment is required.

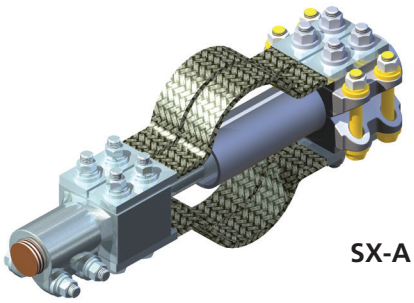

SX-A

Material

Stud - Copper Alloy

Bus - Aluminum Alloy

Hardware

See image

Notes

For a 90 degree stud connector add -90 to the Catalog Number. EX. For at 1"-T14 stud to 1in SPS connector with 90 degree stud connector order: SX100-100A-T14-90



FIG. 1

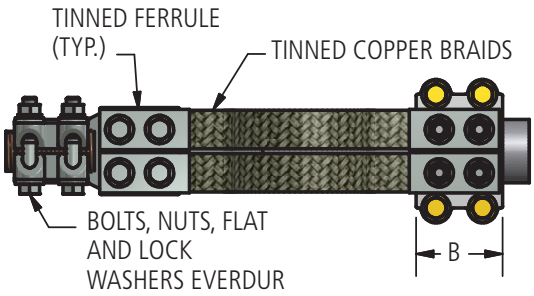

FIG. 2

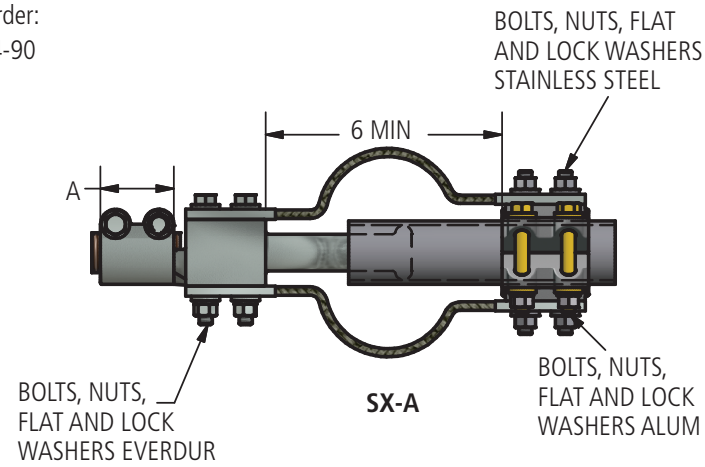

SX-A



SX-A-90

Ordering Information

CATALOG NUMBER	STUD DIAMETER	THREADS PER INCH	SPS	FIG. NO.	DIMENSIONS IN INCHES		BOLT SIZE	
					A	B	STUD	PIPE
SX100-200A-T14	1	14	2	1	2 3/4	3 1/4	1/2	1/2
SX112-100A-T12	1 1/8	12	1	1	2	3 1/8	3/8	1/2
SX112-200A-T12	1 1/8	12	2	1	2 3/4	3 1/4	1/2	1/2
SX150-150A-T12	1 1/2	12	1 1/2	1	2 3/4	3 1/4	1/2	1/2
SX150-200A-T12	1 1/2	12	2	1	2 3/4	3 1/4	1/2	1/2
SX150-300A-T12	2	12	3	2	2 3/4	3 1/2	1/2	5/8
SX200-350A-T12	2	12	3 1/2	2	2 3/4	3 1/2	1/2	5/8
SX200-400A-T12	2	12	4	2	2 3/4	3 1/2	1/2	5/8
SX250-300A-T12	2 1/2	12	3	2	2	3 1/2	1/2	5/8

© 2011, AFL, all rights reserved. PP-3-00465, Revision 1, 1.13.14
Specifications are subject to change without notice.

DOSSERT®

TYPE SX, SX-90, SXP

Stud Expansion Connector for Pipe

An expansion stud connector for joining a tubular bus to a threaded or unthreaded transformer stud. The movements of the conductors caused by thermal expansion and contraction or settling foundations are efficiently absorbed by the flexible braided linkages. Type SX is furnished with an alignment guide for connections where axial alignment is required.

SXP does not have an alignment guide.

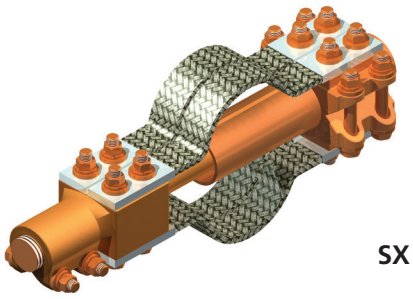

SX

Material

Copper Alloy

Hardware

Everdur bolts, nuts and lockwashers

Notes

- For a 90 degree stud connector, add -90 to the Catalog Number. EX. For a 1"-T14 stud to 1" SPS connector with 90 degree stud connector, order: SX100-100-T14-90.
- SXP has no alignment guide. EX. For a 1"-T14 stud to 1" SPS connector with no alignment guide connector, order: SXP100-100-T14.
- For Tin Dipped, add -SN to the Catalog Number: SX100-100-T14-SN.
- For Laminates in place of Braids, add "L" to the Catalog Number: SXL150-125-T12.
- For stud threads not listed, add suffix "T" and the number of threads per inch to catalog number. EX. For a 1" stud to 1" SPS connector with no threads order: SX100-100-T0.

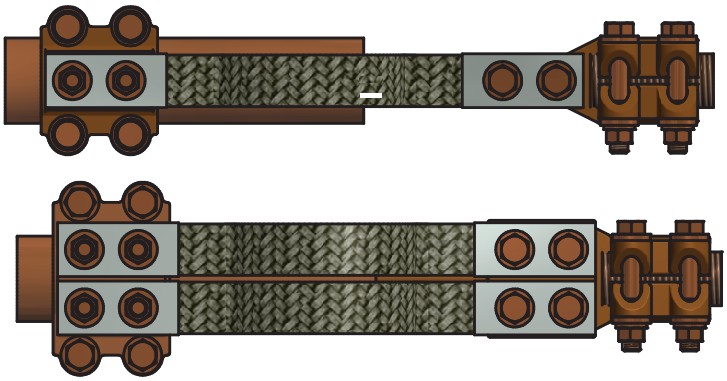

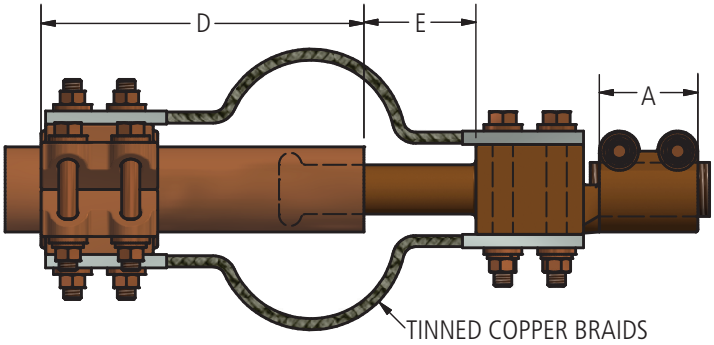



SX-90

© 2011, AFL, all rights reserved. P-3-00464, Revision 3, 1.25.18
Specifications are subject to change without notice.

DOSSERT®

TYPE SX, SX-90, SXP

Stud Expansion Connector for Pipe

Ordering Information

CATALOG NUMBER			STUD DIA	THREADS PER INCH	SPS	DIMENSIONS IN INCHES			BOLT SIZE	
SX	SX-90	SXP				A	D	E	STUD	SPS
SX75-75-T16	SX75-75-T16-90	SXP75-75-T16	3/4	16	3/4	2 1/4	6 5/8	1 1/2	1/2	1/2
SX75-100-T16	SX75-100-T16-90	SXP75-100-T16	3/4	16	1	2 1/4	6 3/4	1 1/2	1/2	1/2
SX100-75-T14	SX100-75-T14-90	SXP100-75-T14	1	14	3/4	2 1/4	6 5/8	1 1/2	1/2	1/2
SX100-100-T14	SX100-100-T14-90	SXP100-100-T14	1	14	1	2 1/4	6 3/4	1 1/2	1/2	1/2
SX100-125-T14	SX100-125-T14-90	SXP100-125-T14	1	14	1 1/4	2 1/4	7 5/8	1 1/2	1/2	1/2
SX100-150-T14	SX100-150-T14-90	SXP100-150-T14	1	14	1 1/2	2 1/4	7 5/8	1 1/2	1/2	1/2
SX112-75-T12	SX112-75-T12-90	SXP112-75-T12	1 1/8	12	3/4	2 1/4	6 5/8	1 1/2	1/2	1/2
SX112-100-T12	SX112-100-T12-90	SXP112-100-T12	1 1/8	12	1	2 1/4	6 3/4	1 1/2	1/2	1/2
SX112-125-T12	SX112-125-T12-90	SXP112-125-T12	1 1/8	12	1 1/4	2 1/4	7 5/8	1 1/2	1/2	1/2
SX112-150-T12	SX112-150-T12-90	SXP-112-150-T12	1 1/8	12	1 1/2	2 1/4	7 5/8	1 1/2	1/2	1/2
SX125-75-T12	SX125-75-T12-90	SXP125-75-T12	1 1/4	12	3/4	2 3/4	6 5/8	1 1/2	1/2	1/2
SX125-100-T12	SX125-100-T12-90	SXP125-100-T12	1 1/4	12	1	2 3/4	6 3/4	1 1/2	1/2	1/2
SX125-125-T12	SX125-125-T12-90	SXP125-125-T12	1 1/4	12	1 1/4	2 3/4	7 5/8	1 1/2	1/2	1/2
SX125-150-T12	SX125-150-T12-90	SXP125-150-T12	1 1/4	12	1 1/2	2 3/4	7 5/8	1 1/2	1/2	1/2
SX125-200-T12	SX125-200-T12-90	SXP125-200-T12	1 1/4	12	2	2 3/4	8 1/4	1 1/2	1/2	1/2
SX150-75-T12	SX150-75-T12-90	SXP150-75-T12	1 1/2	12	3/4	2 3/4	6 5/8	1 1/2	1/2	1/2
SX150-100-T12	SX150-100-T12-90	SXP150-100-T12	1 1/2	12	1	2 3/4	6 3/4	1 1/2	1/2	1/2
SX150-125-T12	SX150-125-T12-90	SXP150-125-T12	1 1/2	12	1 1/4	2 3/4	7 5/8	1 1/2	1/2	1/2
SX150-150-T12	SX150-150-T12-90	SXP150-150-T12	1 1/2	12	1 1/2	2 3/4	7 5/8	1 1/2	1/2	1/2
SX150-200-T12	SX150-200-T12-90	SXP150-200-T12	1 1/2	12	2	2 3/4	8 1/4	2 1/2	1/2	1/2
SX175-75-T12	SX175-75-T12-90	SXP175-75-T12	1 3/4	12	3/4	2 3/4	6 5/8	1 1/2	1/2	1/2
SX175-100-T12	SX175-100-T12-90	SXP175-100-T12	1 3/4	12	1	2 3/4	6 3/4	1 1/2	1/2	1/2
SX175-125-T12	SX175-125-T12-90	SXP175-125-T12	1 3/4	12	1 1/4	2 3/4	7 5/8	1 1/2	1/2	1/2
SX175-150-T12	SX175-150-T12-90	SXP175-150-T12	1 3/4	12	1 1/2	2 3/4	7 5/8	2 1/2	1/2	1/2
SX175-200-T12	SX175-200-T12-90	SXP175-200-T12	1 3/4	12	2	2 3/4	8 1/4	2 1/2	1/2	1/2
SX200-100-T12	SX200-100-T12-90	SXP200-100-T12	2	12	1	2 3/4	6 3/4	1 1/2	1/2	1/2
SX200-125-T12	SX200-125-T12-90	SXP200-125-T12	2	12	1 1/4	2 3/4	7 5/8	1 1/2	1/2	1/2
SX200-150-T12	SX200-150-T12-90	SXP200-150-T12	2	12	1 1/2	2 3/4	7 5/8	1 1/2	1/2	1/2
SX200-200-T12	SX200-200-T12-90	SXP200-200-T12	2	12	2	2 3/4	8 1/4	2 1/2	1/2	1/2
SX200-250-T12	SX200-250-T12-90	SXP200-250-T12	2	12	2 1/2	2 3/4	8 3/4	2 1/2	1/2	1/2
SX225-350E-T12	SX225-350E-T12-90	SXP225-350E-T12	2 1/4	12	3 1/2	2 3/4	9 1/4	2 1/2	1/2	5/8
SX300-200-T12	SX300-200-T12-90	SXP300-200-T12	3	12	2	3 1/4	8 1/4	2 1/2	5/8	1/2
SX300-250-T12	SX300-250-T12-90	SXP300-250-T12	3	12	2 1/2	3 1/4	8 3/4	2 1/2	5/8	1/2
SX300-300-T12	SX300-300-T12-90	SXP300-300-T12	3	12	3	3 1/4	10	2 1/2	5/8	5/8
SX300-350-T12	SX300-350-T12-90	SXP300-350-T12	3	12	3 1/2	3 1/4	11	2 1/2	5/8	5/8
SX300-400-T12	SX300-400-T12-90	SXP300-400-T12	3	12	4	3 1/4	11 1/2	2 1/2	5/8	5/8

© 2011, AFL, all rights reserved. P-3-00464, Revision 3, 1.25.18
Specifications are subject to change without notice.

DOSSERT®

TYPE US, U2S, US-90, U2S-90

Copper U-bolt Stud Connector For Cable

Material

Copper Alloy

Hardware

Everdur bolts, nuts, lockwashers, and U-bolts

Notes

- Can also be readily furnished for plain unthreaded studs.
- For a 90 degree add -90 and for double connector change 'US' to 'U2S'
- For a 1/2" stud, 2/0 Str cable, and 90 degree angle order: US50-13-T13-90
- For a 1/2" stud, two 2/0 Str cable, and 90 degree angle order: U2S50-13-T13-90
- For a 1/2" stud, two 2/0 Str cables and no thread order: U2S50-13-T0

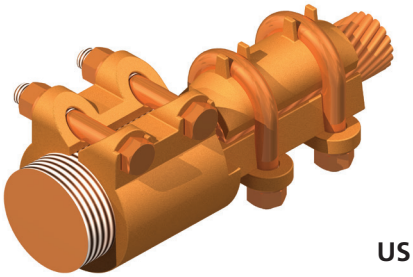

US

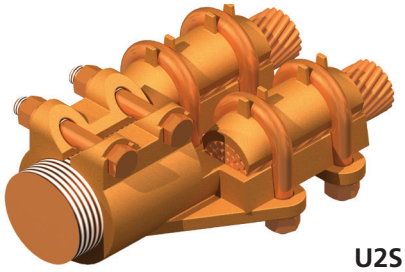

U2S

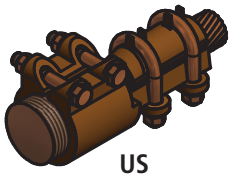

US

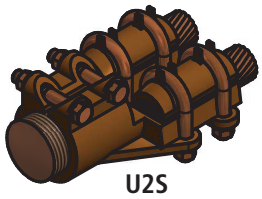

U2S

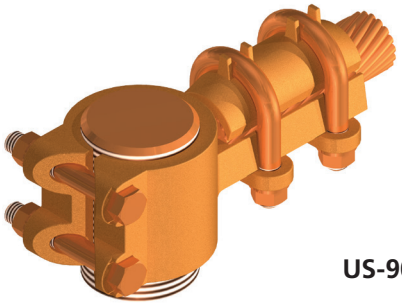

US-90

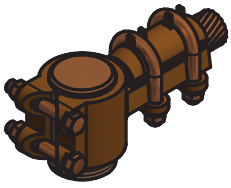

US-90

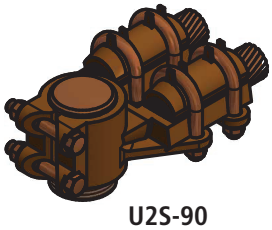

U2S-90

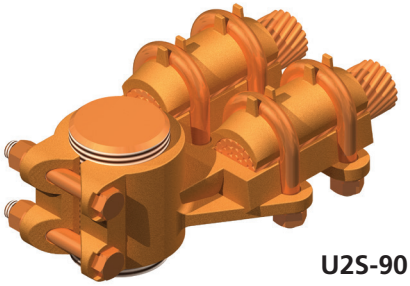

U2S-90

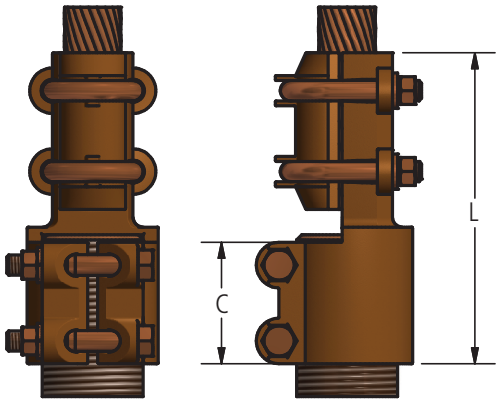

© 2011, AFL, all rights reserved. PP-3-00513, Revision 0, 3.10.11
Specifications are subject to change without notice.

DOSSERT®

TYPE US, U2S, US-90, U2S-90

Copper U-bolt Stud Connector For Cable

Ordering Information

CATALOG NUMBER				STUD DIA.	THREADS PER INCH	CABLE RANGE		DIMENSIONS IN INCHES		BOLT SIZE	
STAIGHT		90 DEGREES									
1 CABLE	2 CABLES	1 CABLE	2 CABLES			MIN	MAX	C	L	STUD	CABLE
US50-13-T13	U2S50-13-T13	US50-13-T13-90	U2S50-13-T13-90	1/2	13	6 STR	2/0 STR	2	4 3/4	3/8	5/16
US50-21-T13	U2S50-21-T13	US50-21-T13-90	U2S50-21-T13-90	1/2	13	1 STR	4/0 STR	2	4 7/8	3/8	3/8
US62-13-T18	U2S62-13-T18	US62-13-T18-90	U2S62-13-T18-90	5/8	18	6 STR	2/0 STR	2	4 3/4	3/8	5/16
US62-21-T18	U2S62-21-T18	US62-21-T18-90	U2S62-21-T18-90	5/8	18	1 STR	4/0 STR	2	4 7/8	3/8	3/8
US62-30-T18	U2S62-30-T18	US62-30-T18-90	U2S62-30-T18-90	5/8	18	1/0 STR	300 MCM	2	5	3/8	3/8
US75-13-T16	U2S75-13-T16	US75-13-T16-90	U2S75-13-T16-90	3/4	16	6 STR	2/0 STR	2	4 3/4	3/8	5/16
US75-21-T16	U2S75-21-T16	US75-21-T16-90	U2S75-21-T16-90	3/4	16	1 STR	4/0 STR	2	4 7/8	3/8	3/8
US75-30-T16	U2S75-30-T16	US75-30-T16-90	U2S75-30-T16-90	3/4	16	1/0 STR	300 MCM	2	5	3/8	3/8
US75-50-T16	U2S75-50-T16	US75-50-T16-90	U2S75-50-T16-90	3/4	16	300 MCM	500 MCM	2 3/4	5 1/4	3/8	3/8
US100-21-T14	U2S100-21-T14	US100-21-T14-90	U2S100-21-T14-90	1	14	1 STR	4/0 STR	2	4 7/8	3/8	3/8
US100-30-T14	U2S100-30-T14	US100-30-T14-90	U2S100-30-T14-90	1	14	1/0 STR	300 MCM	2 3/4	5	3/8	3/8
US100-50-T14	U2S100-50-T14	US100-50-T14-90	U2S100-50-T14-90	1	14	300 MCM	500 MCM	2	5 1/4	3/8	3/8
US100-80-T14	U2S100-80-T14	US100-80-T14-90	U2S100-80-T14-90	1	14	500 MCM	800 MCM	2 3/4	6 1/4	1/2	1/2
US125-30-T12	U2S125-30-T12	US125-30-T12-90	U2S125-30-T12-90	1 1/4	12	1/0 STR	300 MCM	2	5	3/8	3/8
US125-50-TI2	U2S125-50-TI2	US125-50-TI2-90	U2S125-50-TI2-90	1 1/4	12	300 MCM	500 MCM	2	5 1/4	3/8	3/8
US125-80-T12	U2S125-80-T12	US125-80-T12-90	U2S125-80-T12-90	1 1/4	12	500 MCM	800 MCM	2 3/4	6 1/4	1/2	1/2
US125-100-T12	U2S125-100-T12	US125-100-T12-90	U2S125-100-T12-90	1 1/4	12	750 MCM	1000 MCM	2 3/4	6 1/2	1/2	1/2
US150-30-T12	U2S150-30-T12	US150-30-T12-90	U2S150-30-T12-90	1 1/2	12	1/0 STR	300 MCM	2	5	3/8	3/8
US150-80-T12	U2S150-80-T12	US150-80-T12-90	U2S150-80-T12-90	1 1/2	12	500 MCM	800 MCM	2 3/4	6 1/4	1/2	1/2
US150-100-T12	U2S150-100-T12	US150-100-T12-90	U2S150-100-T12-90	1 1/2	12	750 MCM	1000 MCM	2 3/4	6 1/2	1/2	1/2
US150-150-TI2	U2S150-150-TI2	US150-150-TI2-90	U2S150-150-TI2-90	1 1/2	12	1000 MCM	1500 MCM	2 3/4	7	1/2	1/2
US150-200-T12	U2S150-200-T12	US150-200-T12-90	U2S150-200-T12-90	1 1/2	12	1500 MCM	2000 MCM	2 3/4	7 1/2	1/2	1/2
US200-50-T12	U2S200-50-T12	US200-50-T12-90	U2S200-50-T12-90	2	12	300 MCM	500 MCM	2	5 1/4	3/8	3/8
US200-80-T12	U2S200-80-T12	US200-80-T12-90	U2S200-80-T12-90	2	12	500 MCM	800 MCM	2 3/4	6 1/4	1/2	1/2
US200-100-T12	U2S200-100-T12	US200-100-T12-90	U2S200-100-T12-90	2	12	750 MCM	1000 MCM	2 3/4	6 1/2	1/2	1/2
US200-150-T12	U2S200-150-T12	US200-150-T12-90	U2S200-150-T12-90	2	12	1000 MCM	1500 MCM	2 3/4	7	1/2	1/2
US200-200-T12	U2S200-200-T12	US200-200-T12-90	U2S200-200-T12-90	2	12	1500 MCM	2000 MCM	2 3/4	7 1/2	1/2	1/2
US250-50-T12	U2S250-50-T12	US250-50-T12-90	U2S250-50-T12-90	2 1/2	12	300 MCM	500 MCM	2	5 1/4	3/8	3/8
US250-80-TI2	U2S250-80-TI2	US250-80-TI2-90	U2S250-80-TI2-90	2 1/2	12	500 MCM	800 MCM	2 3/4	6 1/4	1/2	1/2
US250-100-T12	U2S250-100-T12	US250-100-T12-90	U2S250-100-T12-90	2 1/2	12	750 MCM	1000 MCM	2 3/4	6 1/2	1/2	1/2
US250-150-TI2	U2S250-150-TI2	US250-150-TI2-90	U2S250-150-TI2-90	2 1/2	12	1000 MCM	1500 MCM	2 3/4	7	1/2	1/2
US300-50-T12	U2S300-50-T12	US300-50-T12-90	U2S300-50-T12-90	3	12	300 MCM	500 MCM	2	5 1/4	3/8	3/8
US300-80-T12	U2S300-80-T12	US300-80-T12-90	U2S300-80-T12-90	3	12	500 MCM	800 MCM	3	6 1/2	1/2	1/2
US300-100-T12	U2S300-100-T12	US300-100-T12-90	U2S300-100-T12-90	3	12	750 MCM	1000 MCM	3	6 3/4	1/2	1/2
US300-150-T12	U2S300-150-T12	US300-150-T12-90	U2S300-150-T12-90	3	12	1000 MCM	1500 MCM	3	7 1/4	1/2	1/2
US300-200-T12	U2S300-200-T12	US300-200-T12-90	U2S300-200-T12-90	3	12	1500 MCM	2000 MCM	3	7 3/4	1/2	1/2

© 2011, AFL, all rights reserved. PP-3-00513, Revision 0, 3.10.11
Specifications are subject to change without notice.

DOSSERT®

TYPE CASV

Cable Spacer Clamp

Material

Copper Alloy

Hardware

Everdur-nuts, bolts and lock washers.

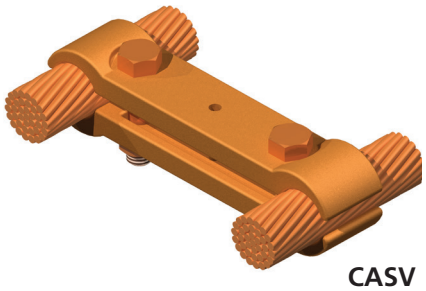

CASV

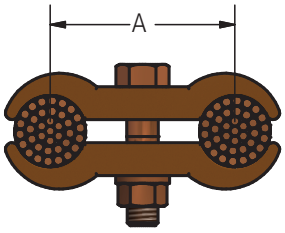

FIG. 1

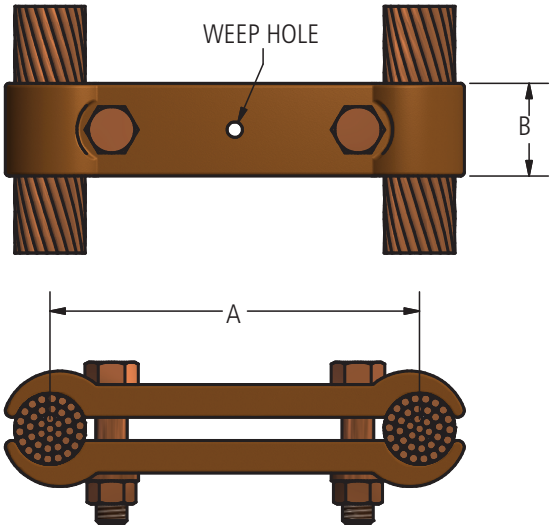

FIG. 2

Ordering Information

CATALOG NUMBER	CABLE RANGE		FIG. NO.	DIMENSIONS IN INCHES		BOLT SIZE
	MIN	MAX		A	B	
CASV60-4	350 MCM	600 MCM	1	4	1 1/2	1/2
CASV90-3	500 MCM	900 MCM	1	3	1 1/2	1/2
CASV90-4	500 MCM	900 MCM	1	4	1 1/2	1/2
CASV90-6	500 MCM	900 MCM	2	6	1 1/2	1/2
CASV90-12	500 MCM	900 MCM	2	12	1 1/2	1/2
CASV100-2 1/2	750 MCM	1000 MCM	1	2 1/2	1 1/2	1/2
CASV100-4	750 MCM	1000 MCM	1	4	1 1/2	1/2
CASV100-6	750 MCM	1000 MCM	2	6	1 1/2	1/2
CASV100-8	750 MCM	1000 MCM	2	8	1 1/2	1/2
CASV200-6	1500 MCM	2000 MCM	2	6	2 1/8	5/8
CASV200-8	1500 MCM	2000 MCM	2	8	2 1/8	5/8

© 2011, AFL, all rights reserved. PP-3-00269, Revision 0, 3.10.11
Specifications are subject to change without notice.

DOSSERT®

TYPE UD2E, UD2E-PG

Dead End Clamp For Two Conductors

A two conductor variable U-bolt type dead ending clamp with curvature for jumper loop.

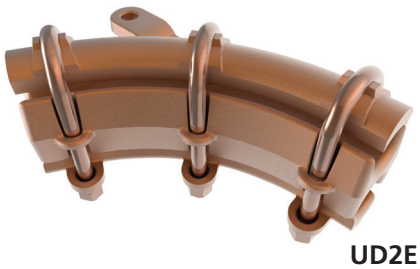

UD2E

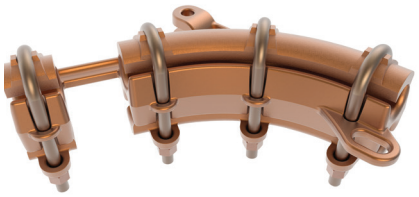

UD2E-PG

Material

Copper Alloy

Hardware

Everdur nuts, U-bolts and lockwashers

Notes

- For a Pulling eye, add suffix "-PG" to end of catalog number. EX: UD2E21-PG

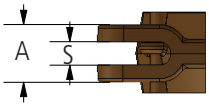

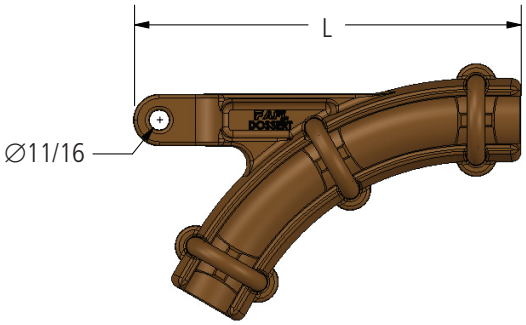

UD2E

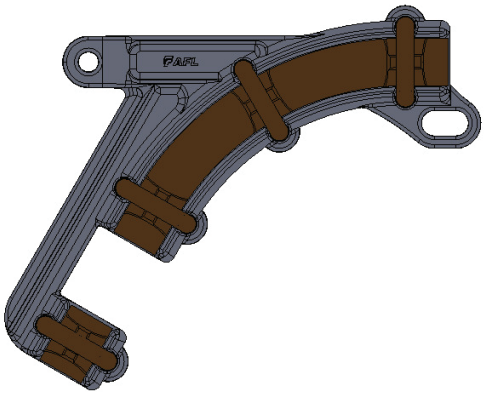

UD2E-PG

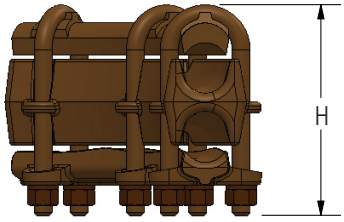

Ordering Information

CATALOG NUMBER	CABLE RANGE		DIMENSIONS IN INCHES				U-BOLT SIZE
	MIN	MAX	A	H	L	S	
UD2E21	2/0 Stranded	4/0 Stranded	1 21/32	3 7/8	8 1/4	3/4	3/8
UD2E35	4/0 Stranded	350 kcmil	1 21/32	4 1/8	8 5/8	3/4	3/8
UD2E50	350 kcmil	500 kcmil	1 21/32	4 3/8	8 5/8	3/4	1/2
UD2E80	500 kcmil	800 kcmil	1 13/16	5	9 1/2	13/16	1/2
UD2E100	600 kcmil	1000 kcmil	1 13/16	5 1/4	9 5/8	13/16	1/2
UD2E150	1250 kcmil	1500 kcmil	1 13/16	6	10 5/8	13/16	1/2
UD2E200	1500 kcmil	2000 kcmil	2	7 9/16	13 7/16	13/16	5/8

© 2011, AFL, all rights reserved. PP-3-00490, Revision 1, 2.8.18
Specifications are subject to change without notice.

DOSSERT®

TYPE CI, CI-E, CX

Copper Corona Bells for Tubular Bus

Corona Bell for sealing the exposed ends of standard pipe size tubular buses. Prevents rain and undue condensation from accumulating inside the bus. The smooth rounded surfaces reduce electrostatic discharge thereby aiding in the reduction of power transmission losses.

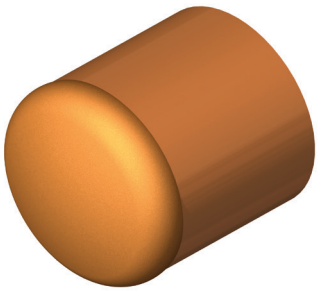

CI

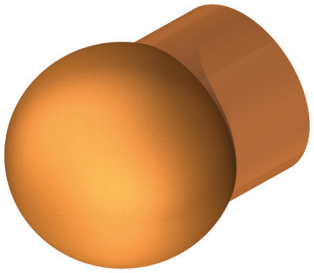

CX

Material

Copper Alloy

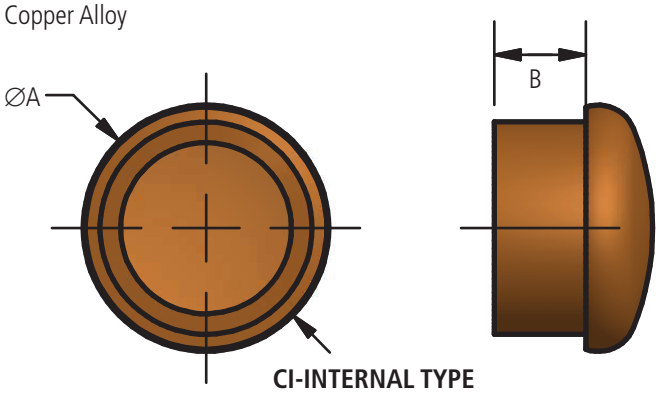

CI-INTERNAL TYPE

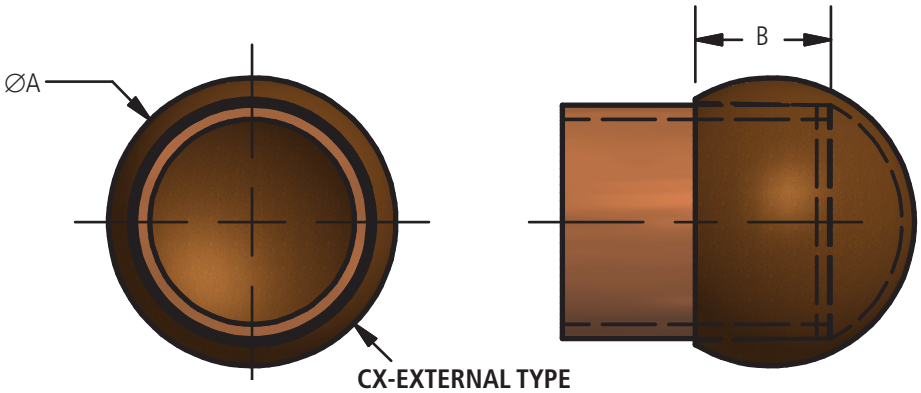

CX-EXTERNAL TYPE

Ordering Information CI (Internal Fit)

CATALOG NUMBER		SPS	DIMENSIONS IN INCHES	
CI SERIES			A	B
SCH. 40	SCH. 80			
CI50	CI50E	1/2	0.840	0.438
CI75	CI75E	3/4	1.050	0.500
CI100	CI100E	1	1.315	0.531
CI125	CI125E	1-1/4	1.660	0.625
CI150	CI150E	1-1/2	1.900	0.688
CI200	CI200E	2	2.375	0.750
CI250	CI250E	2-1/2	2.875	0.813
CI300	CI300E	3	3.500	0.938
CI350	CI350E	3-1/2	4.000	1.125
CI400	CI400E	4	4.500	1.500
CI500	CI500E	5	5.563	2.000
CI600	CI600E	6	6.625	2.500

Ordering Information CX (External Fit)

CATALOG NUMBER	SPS	DIMENSIONS IN INCHES	
CX SERIES		A	B
CX50	1/2	1.125	0.688
CX75	3/4	1.375	0.750
CX100	1	1.750	1.000
CX125	1-1/4	2.125	1.125
CX150	1-1/2	2.563	1.250
CX200	2	3.125	1.500
CX250	2-1/2	3.625	1.625
CX300	3	4.313	1.813
CX350	3-1/2	5.000	2.188
CX400	4	5.500	2.375
CX450	4-1/2	5.625	2.500
CX500	5	6.750	2.625
CX600	6	6.875	2.875

© 2011, AFL, all rights reserved. PP-3-00285, Revision 1, 12.11.17
Specifications are subject to change without notice.

DOSSERT®

TYPE CFT

Tee Connector For Cable To Flat Bar Tap

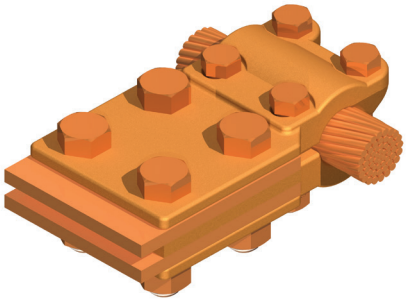

A cable run to flat bar tap tee connector. Designed for one 1/4 inch bar, Fig. 1 and for two ¼ inch bars spaced 1/4 inch apart, Fig. 2.

Material

Copper Alloy

Hardware

Everdur-bolts, nuts, and lockwashers.

Notes

- Can also be furnished upon specification to accommodate additional bars, other bar spacing, and other drilling or any combination thereof.
- Pad size and drilling can also be furnished to conform to NEMA standards.

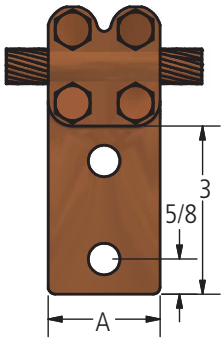

FIG. 1

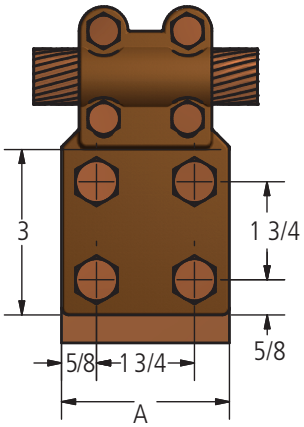

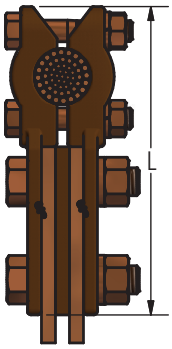

FIG. 2

Ordering Information

CATALOG NUMBER	CABLE SIZE	FIG. NO.	DIMENSIONS IN INCHES		BOLT SIZE
			A	L	
CFT21-1-2N	4/0 Str	1	2	5 7/16	3/8
CFT30-1-2N	300 MCM	1	2	5 1/2	3/8
CFT30-1-3N	300 MCM	1	3	5 1/2	3/8
CFT50-1-2N	500 MCM	1	2	5 11/16	3/8
CFT50-2-2N	500 MCM	2	2	5 11/16	3/8
CFT50-1-3N	500 MCM	1	3	5 11/16	3/8
CFT75-1-2N	750 MCM	1	2	6 1/8	3/8
CFT75-2-2N	750 MCM	2	2	6 1/8	3/8
CFT75-1-3N	750 MCM	1	3	6 1/8	3/8
CFT100-1-2N	1000 MCM	1	2	6 9/16	1/2
CFT100-2-2N	1000 MCM	2	2	6 9/16	1/2
CFT100-1-3N	1000 MCM	1	3	6 9/16	1/2
CFT100-2-3N	1000 MCM	2	3	6 9/16	1/2
CFT100-1-4N	1000 MCM	1	4	6 9/16	1/2
CFT150-1-2N	1500 MCM	1	2	6 7/8	1/2
CFT150-2-2N	1500 MCM	2	2	6 7/8	1/2
CFT150-1-3N	1500 MCM	1	3	6 7/8	1/2
CFT150-2-3N	1500 MCM	2	3	6 7/8	1/2
CFT150-1-4N	1500 MCM	1	4	6 7/8	1/2
CFT200-2-2N	2000 MCM	2	2	7	1/2
CFT200-1-3N	2000 MCM	1	3	7	1/2
CFT200 2-3N	2000 MCM	2	3	7	1/2
CFT200-1-4N	2000 MCM	1	4	7	1/2
CFT200-2-4N	2000 MCM	2	4	7	1/2

© 2011, AFL, all rights reserved. PP-3-00280, Revision 0, 3.10.11
Specifications are subject to change without notice.

DOSSERT®

TYPE CFTV-S

Tee Connector For Cable To Flat Bar Tap

A cable run to flat bar tap tee connector.

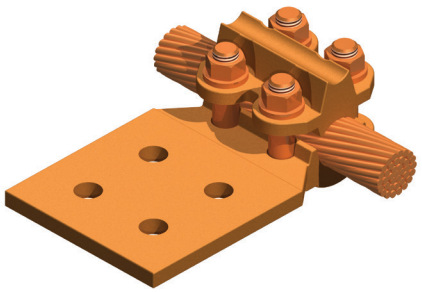

Material

Copper Alloy

Hardware

Everdur-bolts, nuts, and lockwashers.

Note

For a tin plated finish add suffix "-SN" to end of catalog number.
Ex: CFTV60-2N-S-SN

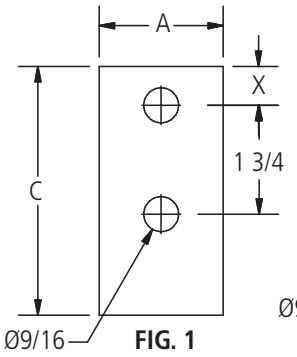

FIG. 1

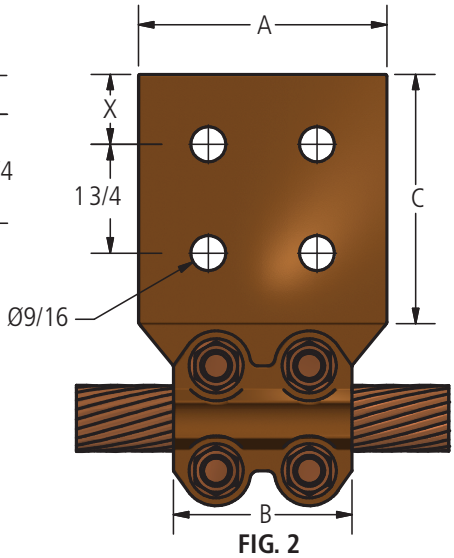

FIG. 2

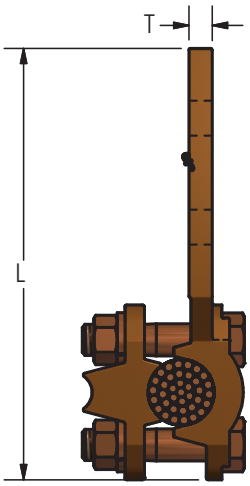

Ordering Information

CATALOG NUMBER	CABLE RANGE				FIG. NO.	DIMENSIONS IN INCHES						BOLT SIZE
	SMALL GROOVE		LARGE GROOVE									
	MIN	MAX	MIN	MAX		A	B	C	L	T	X	
CFTV60-2N-S	4 SOL	3/0 STR	4/0 STR	600 MCM	1	2	2 1/2	3	5 1/2	3/8	5/8	3/8
CFTV60-4N-S	4 SOL	3/0 STR	4/0 STR	600 MCM	2	3	2 1/2	3	5 1/2	3/8	5/8	3/8
CFTV80-2N-S	2/0 SOL	300 MCM	350 MCM	800 MCM	1	2	2 7/8	3	6 1/4	3/8	5/8	1/2
CFTV80-4N-S	2/0 SOL	300 MCM	350 MCM	800 MCM	2	3	2 7/8	3	6 1/4	3/8	5/8	1/2
CFTV80-4N4-S	2/0 SOL	300 MCM	350 MCM	800 MCM	2	4	2 7/8	4	7 1/4	3/8	1 1/8	1/2
CFTV85-2N-S	6 SOL	300 MCM	350 MCM	850 MCM	1	2	2 7/8	3	5 15/16	3/8	5/8	1/2
CFTV85-4N-S	6 SOL	300 MCM	350 MCM	850 MCM	2	3	2 7/8	3	5 15/16	3/8	5/8	1/2
CFTV85-4N4-S	6 SOL	300 MCM	350 MCM	850 MCM	2	4	2 7/8	4	6 15/16	3/8	1 1/8	1/2
CFTV100-2N-S	4/0 SOL	400 MCM	450 MCM	1000 MCM	1	2	2 7/8	3	6	1/2	5/8	1/2
CFTV100-4N-S	4/0 SOL	400 MCM	450 MCM	1000 MCM	2	3	2 7/8	3	6	1/2	5/8	1/2
CFTV100-4N4-S	4/0 SOL	400 MCM	450 MCM	1000 MCM	2	4	2 7/8	4	7	1/2	1 1/8	1/2
CFTV150-2N-S	250 MCM	750 MCM	800 MCM	1500 MCM	1	2	3 3/8	3	6 1/4	1/2	5/8	1/2
CFTV150-4N-S	250 MCM	750 MCM	800 MCM	1500 MCM	2	3	3 3/8	3	6 1/4	1/2	5/8	1/2
CFTV150-4N4-S	250 MCM	750 MCM	800 MCM	1500 MCM	2	4	3 3/8	4	7 1/4	1/2	1 1/8	1/2
CFTV200-4N-S	500 MCM	900 MCM	1000 MCM	2000 MCM	2	3	3 3/8	3	6 1/2	11/16	5/8	1/2
CFTV200-4N4-S	500 MCM	900 MCM	1000 MCM	2000 MCM	2	4	3 3/8	4	7 1/2	11/16	1 1/8	1/2

© 2011, AFL, all rights reserved. PP-3-00137, Revision 0, 3.10.11
Specifications are subject to change without notice.

DOSSERT®

TYPE D

Copper Screw Terminals For Cable To Flat

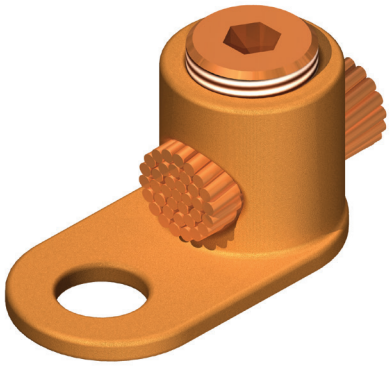

An inexpensive lug of rugged construction yet very compact. These lugs are suitable for all types of installations and are completely reusable. Acceptance of wide range of conductor sizes limits the need for large stock.

Material

Copper Alloy

Hardware

Zinc Plated Steel Screw

Note

Also available with Hex head set screw. Add (H) to catalog number. Example D35H.

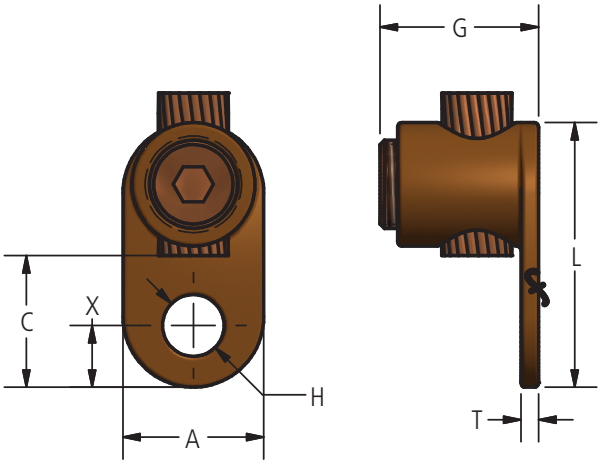

FIG. 1

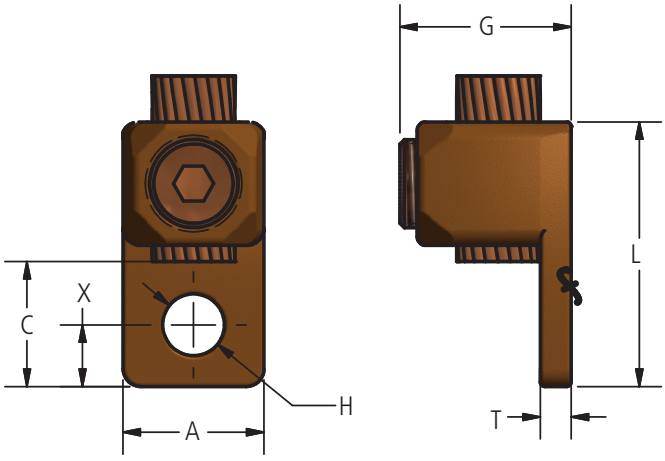

FIG. 2

Ordering Information

CATALOG NUMBER		CABLE RANGE		FIG. NO.	DIMENSIONS IN INCHES						
ALLEN HEAD BOLT	HEX HEAD BOLT	MINIMUM	MAXIMUM		A	C	G	H	L	T	X
D10	D10H	4 STR	1/0 STR	1	3/4	3/4	7/8	11/32	1 1/2	5/32	3/8
D21	D21H	1 STR	4/0 STR	1	15/16	1	1 1/4	7/16	1 13/16	3/16	7/16
D25	D25H	2/0 STR	250 MCM	1	1	1	1 5/16	7/16	1 7/8	3/16	7/16
D35	D35H	#14 SOL	#8 STR	1	13/32	15/32	9/16	7/32	13/16	5/64	3/16
D50	D50H	4/0 STR	500 MCM	2	1 3/8	1 3/8	1 3/4	9/16	2 7/8	5/16	11/16
D70	D70H	#14 SOL	#4 STR	1	9/16	5/8	11/16	9/32	1 1/8	7/64	1/4
D100	D100H	500 MCM	1000 MCM	2	1 15/16	1 5/8	2 1/4	9/16	3 5/8	3/8	3/4

© 2011, AFL, all rights reserved. PP-3-00302, Revision 0, 3.10.11
Specifications are subject to change without notice.

DOSSERT®

TYPE D2

Copper Screw Terminals For Two Cables To Flat

A double conductor lug of the same rugged construction as the Type D. Available with either hex socket or hex head pressure screws. Wide range of conductor sizes limits the need for large stock.

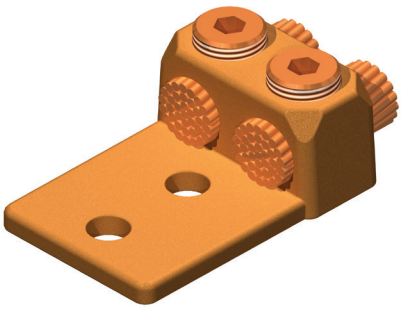

Material

Copper Alloy

Hardware

Zinc Plated Steel Screw

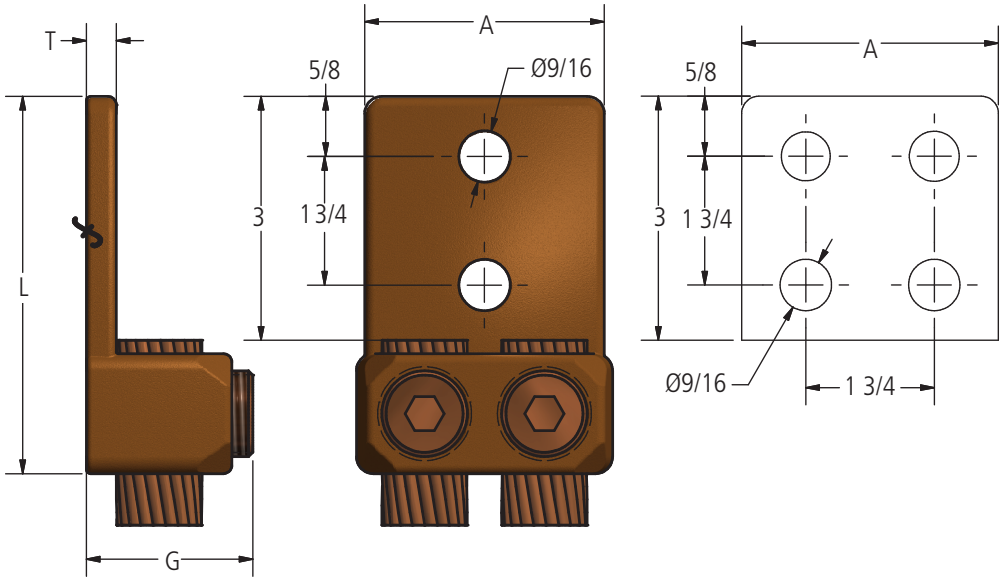

Ordering Information

CATALOG NUMBER		CABLE RANGE		FIG. NO.	DIMENSIONS IN INCHES			
SOCKET	HEX	MIN	MAX		A	G	L	T
D2-25	D2-25H	1/0 STR	250 MCM	1	1 7/8	1 5/16	4 5/16	9/32
D2-50	D2-50H	4/0 STR	500 MCM	1	2 1/2	1 3/4	4 7/8	3/8
D2-100	D2-100H	500 MCM	1000 MCM	2	3 1/4	2 1/4	5 9/16	1/2

© 2011, AFL, all rights reserved. PP-3-00303, Revision 0, 3.10.11
Specifications are subject to change without notice.

DOSSERT®

TYPE HHL, HHL-A

Copper Heavy Duty Terminal for Cable

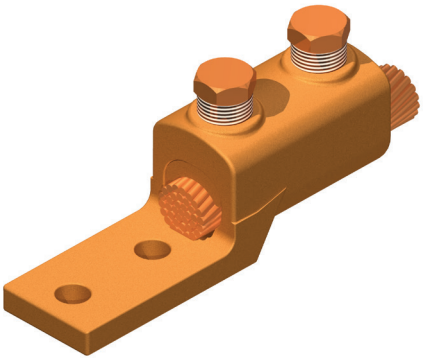

A variable terminal connector whose double clamping element provides for additional secureness where heavy duty service is required. The simplicity of installation and rugged design make this connector a serviceable unit. Made of high conductivity cast copperalloy and equipped with bronze pressure screws and clamping members. HHL-A has cap screws instead of hex bolts for clapping the conductor.

Material

Copper Alloy

Hardware

Zinc Plated Steel Screw

Note

For a 350MCM cable to a 2 NEMA pad with cap screws order: HHL350-2N-A

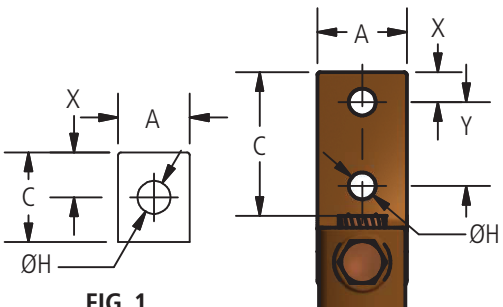

FIG. 1

FIG. 2

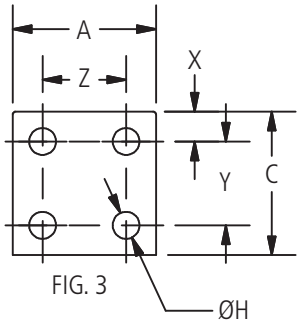

FIG. 3

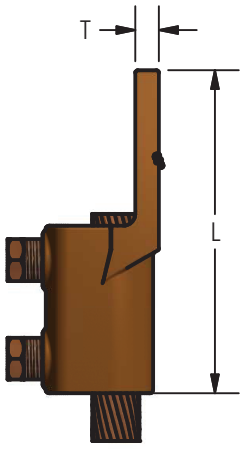

HHL



HHL-A

© 2011, AFL, all rights reserved. PP-3-00369, Revision 1, 8.5.13
Specifications are subject to change without notice.

DOSSERT®

TYPE HHL, HHL-A

Copper Heavy Duty Terminal for Cable

Ordering Information

CATALOG NUMBER		CABLE SIZE		FIG. NO.	DIMENSIONS IN INCHES							
HEX HEAD BOLT	ALLEN HEAD BOLT	MIN	MAX		A	C	H	L	X	Y	Z	T
HHL4-1	HHL4-1-A	8 SOL	4 STR	1	1/2	5/8	9/32	2 3/8	5/16	-	-	3/16
HHL4-2	HHL4-2-A	8 SOL	4 STR	2	1/2	1 1/4	9/32	2 15/16	5/16	5/8	-	3/16
HHL8-1	HHL8-1-A	4 SOL	1 STR	1	11/16	11/16	9/32	2 13/16	11/32	-	-	7/32
HHL8-2	HHL8-2-A	4 SOL	1 STR	2	11/16	1 3/8	9/32	3 5/8	5/16	3/4	-	7/32
HHL13-1	HHL13-1-A	1 STR	2/0 STR	1	13/16	7/8	7/16	3 3/16	7/16	-	-	7/32
HHL13-2	HHL13-2-A	1 STR	2/0 STR	2	13/16	1 5/8	11/32	4 3/16	3/8	7/8	-	7/32
HHL21-1	HHL21-1-A	2/0 STR	4/0 STR	1	1	1	7/16	3 9/16	1/2	-	-	1/4
HHL21-2	HHL21-2-A	2/0 STR	4/0 STR	2	1	1 3/4	7/16	4 1/2	3/8	1	-	1/4
HHL21-2N	HHL21-2N-A	2/0 STR	4/0 STR	2	1 1/2	3	9/16	5 5/8	5/8	1 3/4	-	1/4
HHL30-1	HHL30-1-A	4/0 STR	300 MCM	1	1 3/16	1 1/4	9/16	4 3/16	5/8	-	-	5/16
HHL30-2	HHL30-2-A	4/0 STR	300 MCM	2	1 3/16	2	7/16	4 3/4	7/16	1	-	5/16
HHL30-2N	HHL30-2N-A	4/0 STR	300 MCM	2	1 1/2	3	9/16	5 7/8	5/8	1 3/4	-	5/16
HHL35-1	HHL35-1-A	250 MCM	350 MCM	1	1 3/16	1 1/4	9/16	4 3/8	5/8	-	-	5/16
HHL35-2	HHL35-2-A	250 MCM	350 MCM	2	1 3/16	2	7/16	4 7/8	7/16	1	-	5/16
HHL35-2N	HHL35-2N-A	300 MCM	350 MCM	2	1 1/2	3	9/16	6	5/8	1 3/4	-	5/16
HHL50-1	HHL50-1-A	300 MCM	500 MCM	1	1 3/8	1 3/8	9/16	4 7/8	11/16	-	-	11/32
HHL50-2	HHL50-2-A	300 MCM	500 MCM	2	1 3/8	2	7/16	5 3/8	7/16	1	-	11/32
HHL50-2N	HHL50-2N-A	300 MCM	500 MCM	2	1 1/2	3	9/16	6 3/8	5/8	1 3/4	-	11/32
HHL50-4	HHL50-4-A	300 MCM	500 MCM	3	2	2	7/16	5 3/8	7/16	1	1	11/32
HHL50-4N	HHL50-4N-A	500 MCM	750 MCM	3	3	3	9/16	6 7/8	5/8	1 3/4	1 3/4	11/32
HHL75-1	HHL75-1-A	500 MCM	750 MCM	1	1 5/8	1 3/4	11/16	5 11/16	7/8	-	-	3/8
HHL75-2	HHL75-2-A	500 MCM	750 MCM	2	1 5/8	2 1/4	9/16	5 15/16	9/16	1 1/8	-	3/8
HHL75-2N	HHL75-2N-A	500 MCM	750 MCM	2	1 5/8	3	9/16	6 13/16	5/8	1 3/4	-	3/8
HHL75-4	HHL75-4-A	500 MCM	750 MCM	3	2 1/4	2 1/4	7/16	5 3/4	5/8	1	1	3/8
HHL75-4N	HHL75-4N-A	750 MCM	1000 MCM	3	3	3	9/16	6 7/8	5/8	1 3/4	1 3/4	3/8
HHL100-1	HHL100-1-A	750 MCM	1000 MCM	1	1 7/8	1 7/8	11/16	6 1/16	15/16	-	-	1/2
HHL100-2	HHL100-2-A	750 MCM	1000 MCM	2	1 7/8	2 1/2	9/16	6 3/8	5/8	1 1/4	-	1/2
HHL100-2N	HHL100-2N-A	750 MCM	1000 MCM	2	1 7/8	3	9/16	7 1/16	5/8	1 3/4	-	1/2
HHL100-4	HHL100-4-A	750 MCM	1000 MCM	3	2 1/2	2 1/2	7/16	6 1/4	5/8	1 1/4	1 1/4	1/2
HHL100-4N	HHL100-4N-A	1000 MCM	1500 MCM	3	3	3	9/16	7 1/8	5/8	1 3/4	1 3/4	1/2
HHL150-1	HHL150-1-A	1000 MCM	1500 MCM	1	2 1/8	2 1/8	13/16	6 3/8	1 1/16	-	-	9/16
HHL150-2	HHL150-2-A	1000 MCM	1500 MCM	2	2 1/8	2 5/8	9/16	7 3/8	5/8	1 3/8	-	9/16
HHL150-2N	HHL150-2N-A	1000 MCM	1500 MCM	2	2 1/8	3	9/16	7 3/4	5/8	1 3/4	-	9/16
HHL150-4	HHL150-4-A	1000 MCM	1500 MCM	3	2 5/8	2 5/8	9/16	7 3/8	5/8	1 3/8	1 3/8	9/16
HHL150-4N	HHL150-4N-A	1000 MCM	1500 MCM	3	3	3	9/16	8 1/4	5/8	1 3/4	1 3/4	9/16

© 2011, AFL, all rights reserved. PP-3-00369, Revision 1, 8.5.13
Specifications are subject to change without notice.

DOSSERT®

TYPE HL, HLA-45, HLA-90

Copper Set Screw Terminal. HL conductor runs parallel to the pad, HLA45 the pad is at a 45° angle to the conductor, and HLA90 the pad is at a 90° angle to the conductor. HL-A has a set screw instead of the hex bolt.

The HERCULON™ Lug is designed for quick and efficient installation. Its compact rigid structure makes it especially adaptable for assembly in inaccessible quarters. A high compressive clamping force on the cable conductors plus the additional gripping action of special serrated bearing areas makes for high electrical contact efficiency and pull out strength.

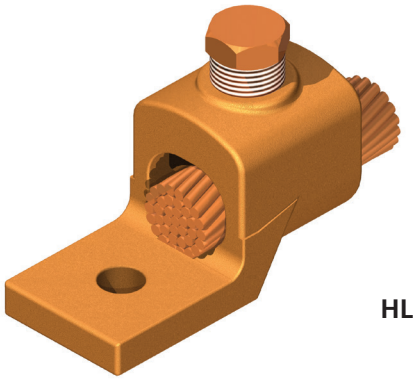

HL

Material

Copper Alloy

Note

For set screw instead of bolt, add "A" to end of part number. Example: HL1-1A

Hardware

Everdur pressure bolt

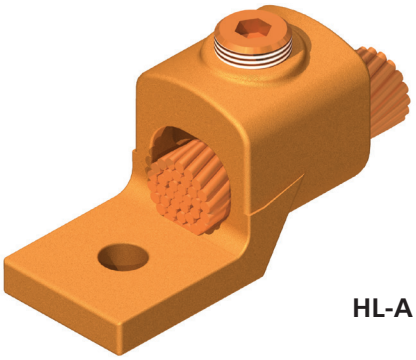

HL-A

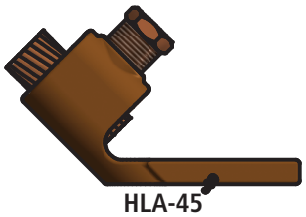

HLA-45

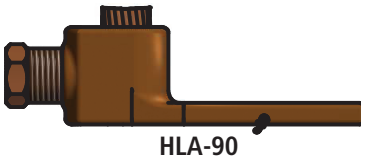

HLA-90

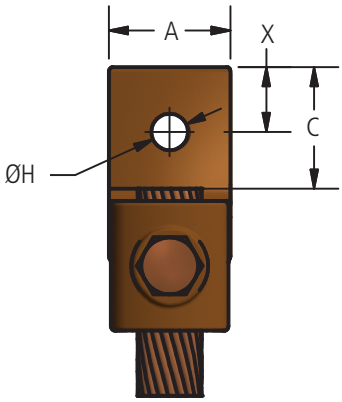

FIG. 1
HL

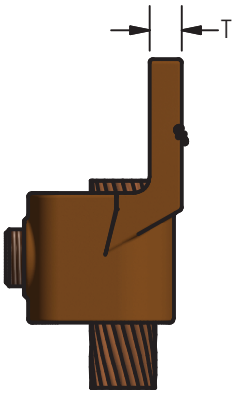

HL-A

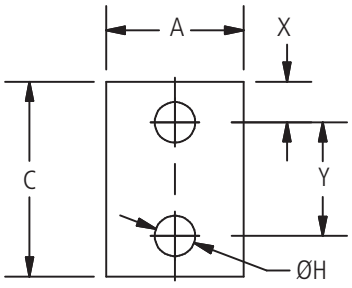

FIG. 2

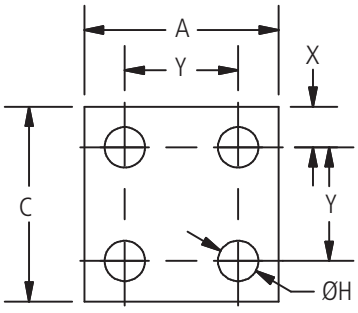

FIG. 3

© 2011, AFL, all rights reserved. PP-3-00371, Revision 2, 6.1.18
Specifications are subject to change without notice.

DOSSERT®

TYPE HL, HLA-45, HLA-90

Ordering Information

CATALOG NUMBER			COMMERCIAL CABLE SIZE		NAVY CABLE SIZE		FIG. NO.	DIMENSIONS IN INCHES					
STRAIGHT	45 DEG	90 DEG	MIN.	MAX.	MIN.	MAX.		A	C	H	X	Y	T
HL1-1	HLA1-1-45	HLA1-1-90	14 SOL	8 STR	4	14	1	9/16	3/4	7/32	5/16	-	3/16
HL1-2	HLA1-2-45	HLA1-2-90	14 SOL	8 STR	4	14	2	1/2	1 1/4	7/32	5/16	5/8	3/16
HL4-1	HLA4-1-45	HLA4-1-90	8 SOL	4 STR	23	40	1	9/16	3/4	9/32	5/16	-	3/16
HL4-2	HLA4-2-45	HLA4-2-90	8 SOL	4 STR	23	40	2	9/16	1 1/4	9/32	5/16	5/8	3/16
HL8-1	HLA8-1-45	HLA8-1-90	4 SOL	1 STR	50	75	1	3/4	7/8	9/32	11/32	-	7/32
HL8-2	HLA8-2-45	HLA8-2-90	4 SOL	1 STR	50	75	2	3/4	1 1/2	9/32	5/16	3/4	7/32
HL13-1	HLA13-1-45	HLA13-1-90	1 STR	2/0 STR	100	125	1	13/16	7/8	7/16	7/16	-	7/32
HL13-2	HLA13-2-45	HLA13-2-90	1 STR	2/0 STR	100	125	2	13/16	1 5/8	7/16	3/8	1	7/32
HL21-1	HLA21-1-45	HLA21-1-90	2/0 STR	4/0 STR	150	200	1	1	1	7/16	1/2	-	1/4
HL21-2	HLA21-2-45	HLA21-2-90	2/0 STR	4/0 STR	150	200	2	1	1 3/4	7/16	3/8	1	1/4
HL21-2N	HLA21-2N-45	HLA21-2N-90	2/0 STR	4/0 STR	150	200	2	1	3	9/16	5/8	1 3/4	1/4
HL30-1	HLA30-1-45	HLA30-1-90	4/0 STR	300 MCM	250	300	1	1 1/16	1 1/4	9/16	5/8	-	5/16
HL30-2	HLA30-2-45	HLA30-2-90	4/0 STR	300 MCM	250	300	2	1 3/16	2	7/16	7/16	1	5/16
HL30-2N	HLA30-2N-45	HLA30-2N-90	4/0 STR	300 MCM	250	300	2	1 1/16	3	9/16	5/8	1 3/4	5/16
HL35-1	HLA35-1-45	HLA35-1-90	250 MCM	350 MCM	250	350	1	1 3/16	1 1/4	9/16	5/8	-	5/16
HL35-2	HLA35-2-45	HLA35-2-90	250 MCM	350 MCM	250	350	2	1 3/16	2	7/16	7/16	1	5/16
HL35-2N	HLA35-2N-45	HLA35-2N-90	250 MCM	350 MCM	250	350	2	1 1/2	3	9/16	5/8	1 3/4	5/16
HL50-1	HLA50-1-45	HLA50-1-90	300 MCM	500 MCM	400	500	1	1 3/8	1 1/2	9/16	3/4	-	11/32
HL50-2	HLA50-2-45	HLA50-2-90	300 MCM	500 MCM	400	500	2	1 3/8	2	7/16	7/16	1	11/32
HL50-2N	HLA50-2N-45	HLA50-2N-90	300 MCM	500 MCM	400	500	2	1 1/2	3	9/16	5/8	1 3/4	11/32
HL50-4	HLA50-4-45	HLA50-4-90	300 MCM	500 MCM	400	500	3	2	2	7/16	7/16	1	11/32
HL50-4N	HLA50-4N-45	HLA50-4N-90	300 MCM	500 MCM	400	500	3	3	3	9/16	5/8	1 3/4	11/32
HL75-1	HLA75-1-45	HLA75-1-90	500 MCM	750 MCM	500	750	1	1 5/8	1 3/4	11/16	7/8	-	3/8
HL75-2	HLA75-2-45	HLA75-2-90	500 MCM	750 MCM	500	750	2	1 5/8	2 1/4	7/16	9/16	1 1/8	3/8
HL75-2N	HLA75-2N-45	HLA75-2N-90	500 MCM	750 MCM	500	750	2	1 5/8	3	9/16	5/8	1 3/4	3/8
HL75-4	HLA75-4-45	HLA75-4-90	500 MCM	750 MCM	500	750	3	2 1/4	2 1/4	7/16	5/8	1	3/8
HL75-4N	HLA75-4N-45	HLA75-4N-90	500 MCM	750 MCM	500	750	3	3	3	9/16	5/8	1 3/4	3/8
HL100-1	HLA100-1-45	HLA100-1-90	750 MCM	1000 MCM	800	1000	1	1 7/8	1 7/8	11/16	15/16	-	1/2
HL100-2	HLA100-2-45	HLA100-2-90	750 MCM	1000 MCM	800	1000	2	1 7/8	2 1/2	9/16	5/8	1 1/4	1/2
HL100-2N	HLA100-2N-45	HLA100-2N-90	750 MCM	1000 MCM	800	1000	2	1 7/8	3	9/16	5/8	1 3/4	1/2
HL100-4	HLA100-4-45	HLA100-4-90	750 MCM	1000 MCM	800	1000	3	2 1/2	2 1/2	7/16	5/8	1 1/4	1/2
HL100-4N	HLA100-4N-45	HLA100-4N-90	750 MCM	1000 MCM	800	1000	3	3	3	9/16	5/8	1 3/4	1/2
HL150-1	HLA150-1-45	HLA150-1-90	1000 MCM	1500 MCM	1300	1300	1	2 3/16	2 1/8	13/16	1 1/16	-	9/16
HL150-2	HLA150-2-45	HLA150-2-90	1000 MCM	1500 MCM	1300	1300	2	2 3/16	2 5/8	9/16	5/8	1 3/8	9/16
HL150-2N	HLA150-2N-45	HLA150-2N-90	1000 MCM	1500 MCM	1300	1300	2	2 3/16	3	9/16	5/8	1 3/4	9/16
HL150-4	HLA150-4-45	HLA150-4-90	1000 MCM	1500 MCM	1300	1300	3	2 1/2	2 5/8	9/16	5/8	1 3/8	9/16
HL150-4N	HLA150-4N-45	HLA150-4N-90	1000 MCM	1500 MCM	1300	1300	3	3	3	9/16	5/8	1 3/4	9/16
HL200-1	HLA200-1-45	HLA200-1-90	1500 MCM	2000 MCM	1500	2000	1	2 1/2	2 3/8	13/16	1 1/4	-	5/8
HL200-2	HLA200-2-45	HLA200-2-90	1500 MCM	2000 MCM	1500	2000	2	2 1/2	2 3/4	9/16	5/8	1 1/2	5/8
HL200-2N	HLA200-2N-45	HLA200-2N-90	1500 MCM	2000 MCM	1500	2000	2	2 1/2	3	9/16	5/8	1 3/4	5/8
HL200-4	HLA200-4-45	HLA200-4-90	1500 MCM	2000 MCM	1500	2000	3	2 5/8	2 3/4	9/16	5/8	1 1/2	5/8
HL200-4N	HLA200-4N-45	HLA200-4N-90	1500 MCM	2000 MCM	1500	2000	3	3	3	9/16	5/8	1 3/4	5/8

© 2011, AFL, all rights reserved. PP-3-00371, Revision 2, 6.1.18
Specifications are subject to change without notice.

DOSSERT®

TYPE HL, H2L, H3L, H4L

Copper Set Screw Terminal. HL is a single condutor Herculon Connector, H2L is a two condutor HERCULON™ Connector, H3L is a three condutor Herculon Connector, and H4L is a four condutor Herculon Connector. HL-A has a set screw instead of the hex bolt.

The HERCULON™ Lug is designed for quick and efficient installation. Its compact rigid structure makes it especially adaptable for assembly in inaccessible quarters. A high compressive clamping force on the cable conductors plus the additional gripping action of special serrated bearing areas makes for high electrical contact efficiency and pull out strength.

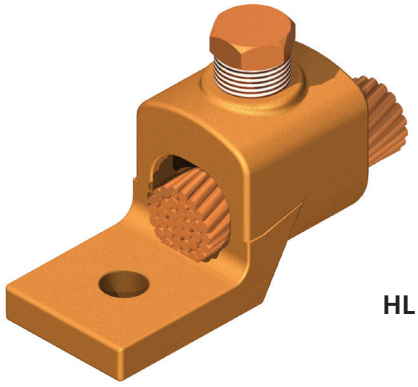

HL

Material

Copper Alloy

Hardware

Everdur pressure bolt

Notes

- For a 2 condutor, 4N NEMA pad, and 750 MCM cable order H2L75-4N
- For a 3 condutor, 4N NEMA pad, 750 MCM cable, and cap screw order H3L75-4NA
- For a 4 condutor, 4N NEMA pad, and 750 MCM cable order H4L75-4N
- For angled terminals add angle to end of catalog number. Example: H4L1-1-45

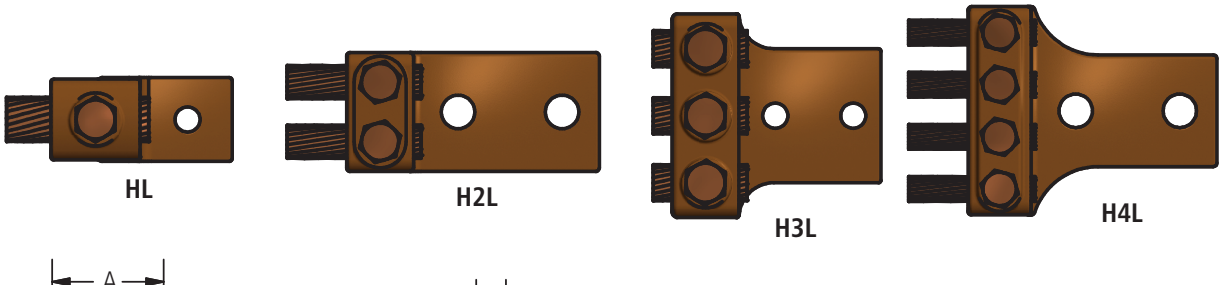

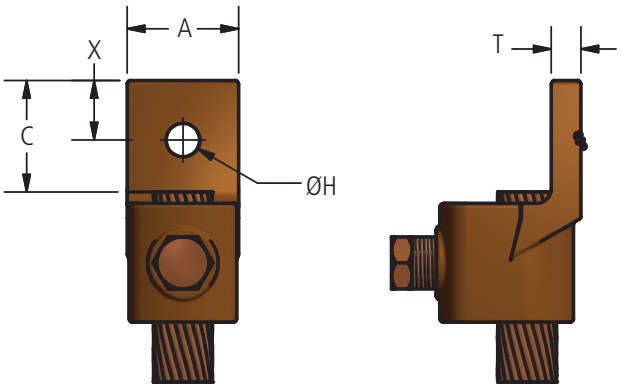

FIG. 1

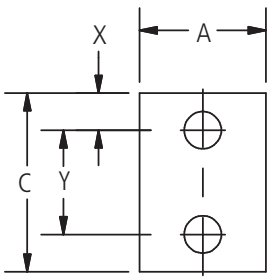

FIG. 2

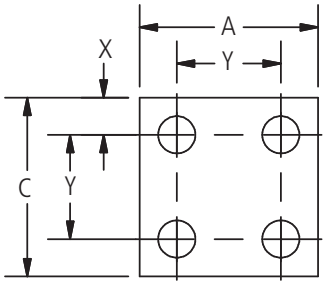

FIG. 3

© 2011, AFL, all rights reserved. PP-3-00370, Revision 1, 8.5.13
Specifications are subject to change without notice.

DOSSERT®

TYPE HL, H2L, H3L, H4L

Copper Set Screw Terminal. HL is a single condutor Herculon Connector, H2L is a two condutor HERCULON™ Connector, H3L is a three condutor Herculon Connector, and H4L is a four condutor Herculon Connector. HL-A has a set screw instead of the hex bolt.

Ordering Information

CATALOG NUMBER				COMMERCIAL CABLE SIZE		NAVY CABLE SIZE		FIG. NO.	DIMENSIONS IN INCHES					
ONE CABLE	TWO CABLES	THREE CABLES	FOUR CABLES	MIN	MAX	MIN	MAX		A	C	H	X	Y	T
HL1-1	H2L1-1	H3L1-1	H4L1-1	14 SOL	8 STR	4	14	1	1/2	5/8	7/32	5/16	-	3/16
HL1-2	H2L1-2	H3L1-2	H4L1-2	14 SOL	8 STR	4	14	2	1/2	1 1/4	7/32	5/16	5/8	3/16
HL4-1	H2L4-1	H3L4-1	H4L4-1	8 SOL	4 STR	23	40	1	1/2	5/8	9/32	5/16	-	3/16
HL4-2	H2L4-2	H3L4-2	H4L4-2	8 SOL	4 STR	23	40	2	1/2	1 1/4	9/32	5/16	5/8	3/16
HL8-1	H2L8-1	H3L8-1	H4L8-1	4 SOL	1 STR	50	75	1	11/16	11/16	9/32	11/32	-	7/32
HL8-2	H2L8-2	H3L8-2	H4L8-2	4 SOL	1 STR	50	75	2	11/16	1 3/8	9/32	5/16	3/4	7/32
HL13-1	H2L13-1	H3L13-1	H4L13-1	1 STR	2/0 STR	100	125	1	13/16	7/8	7/16	7/16	-	7/32
HL13-2	H2L13-2	H3L13-2	H4L13-2	1 STR	2/0 STR	100	125	2	13/16	1 3/4	11/32	3/8	1	7/32
HL21-1	H2L21-1	H3L21-1	H4L21-1	2/0 STR	4/0 STR	150	200	1	1	1	7/16	1/2	-	1/4
HL21-2	H2L21-2	H3L21-2	H4L21-2	2/0 STR	4/0 STR	150	200	2	1	1 3/4	7/16	3/8	1	1/4
HL21-2N	H2L21-2N	H3L21-2N	H4L21-2N	2/0 STR	4/0 STR	150	200	2	1	3	9/16	5/8	1 3/4	1/4
HL30-1	H2L30-1	H3L30-1	H4L30-1	4/0 STR	300 MCM	250	300	1	1 1/16	1 1/4	9/16	5/8	-	5/16
HL30-2	H2L30-2	H3L30-2	H4L30-2	4/0 STR	300 MCM	250	300	2	1 1/16	2	7/16	7/16	1	5/16
HL30-2N	H2L30-2N	H3L30-2N	H4L30-2N	4/0 STR	300 MCM	250	300	2	1 1/16	3	9/16	5/8	1 3/4	5/16
HL35-1	H2L35-1	H3L35-1	H4L35-1	250 MCM	350 MCM	250	350	1	1 1/8	1 1/4	9/16	5/8	-	5/16
HL35-2	H2L35-2	H3L35-2	H4L35-2	250 MCM	350 MCM	250	350	2	1 1/8	2	7/16	7/16	1	5/16
HL35-2N	H2L35-2N	H3L35-2N	H4L35-2N	250 MCM	350 MCM	250	350	2	1 1/8	3	9/16	5/8	1 3/4	5/16
HL50-1	H2L50-1	H3L50-1	H4L50-1	300 MCM	500 MCM	400	500	1	1 3/8	1 3/8	9/16	11/16	-	11/32
HL50-2	H2L50-2	H3L50-2	H4L50-2	300 MCM	500 MCM	400	500	2	1 3/8	2	7/16	7/16	1	11/32
HL50-2N	H2L50-2N	H3L50-2N	H4L50-2N	300 MCM	500 MCM	400	500	2	1 3/8	3	9/16	5/8	1 3/4	11/32
HL50-4	H2L50-4	H3L50-4	H4L50-4	300 MCM	500 MCM	400	500	3	2	2	7/16	7/16	1	11/32
HL50-4N	H2L50-4N	H3L50-4N	H4L50-4N	300 MCM	500 MCM	400	500	3	3	3	9/16	5/8	1 3/4	11/32
HL75-1	H2L75-1	H3L75-1	H4L75-1	500 MCM	750 MCM	500	750	1	1 5/8	1 3/4	11/16	7/8	-	3/8
HL75-2	H2L75-2	H3L75-2	H4L75-2	500 MCM	750 MCM	500	750	2	1 5/8	2 1/4	9/16	9/16	1 1/8	3/8
HL75-2N	H2L75-2N	H3L75-2N	H4L75-2N	500 MCM	750 MCM	500	750	2	1 5/8	3	9/16	5/8	1 3/4	3/8
HL75-4	H2L75-4	H3L75-4	H4L75-4	500 MCM	750 MCM	500	750	3	2 1/4	2 1/4	7/16	5/8	1	3/8
HL75-4N	H2L75-4N	H3L75-4N	H4L75-4N	500 MCM	750 MCM	500	750	3	3	3	9/16	5/8	1 3/4	3/8
HL100-1	H2L100-1	H3L100-1	H4L100-1	750 MCM	1000 MCM	800	1000	1	1 7/8	1 7/8	11/16	15/16	-	1/2
HL100-2	H2L100-2	H3L100-2	H4L100-2	750 MCM	1000 MCM	800	1000	2	1 7/8	2 1/2	9/16	5/8	1 1/4	1/2
HL100-2N	H2L100-2N	H3L100-2N	H4L100-2N	750 MCM	1000 MCM	800	1000	2	1 7/8	3	9/16	5/8	1 3/4	1/2
HL100-4	H2L100-4	H3L100-4	H4L100-4	750 MCM	1000 MCM	800	1000	3	2 1/2	2 1/2	7/16	5/8	1 1/4	1/2
HL100-4N	H2L100-4N	H3L100-4N	H4L100-4N	750 MCM	1000 MCM	800	1000	3	3	3	9/16	5/8	1 3/4	1/2
HL150-1	H2L150-1	H3L150-1	H4L150-1	1000 MCM	1500 MCM	1300	1300	1	2 3/16	2 1/8	13/16	1 1/16	-	9/16
HL150-2	H2L150-2	H3L150-2	H4L150-2	1000 MCM	1500 MCM	1300	1300	2	2 3/16	2 5/8	9/16	5/8	1 3/8	9/16
HL150-2N	H2L150-2N	H3L150-2N	H4L150-2N	1000 MCM	1500 MCM	1300	1300	2	2 3/16	3	9/16	5/8	1 3/4	9/16
HL150-4	H2L150-4	H3L150-4	H4L150-4	1000 MCM	1500 MCM	1300	1300	3	2 1/2	2 5/8	9/16	5/8	1 3/8	1/2
HL150-4N	H2L150-4N	H3L150-4N	H4L150-4N	1000 MCM	1500 MCM	1300	1300	3	3	3	9/16	5/8	1 3/4	1/2
HL200-1	H2L200-1	H3L200-1	H4L200-1	1600 MCM	2000 MCM	1600	2000	1	2 1/2	2 3/8	13/16	13/16	-	5/8
HL200-2	H2L200-2	H3L200-2	H4L200-2	1600 MCM	2000 MCM	1600	2000	2	2 1/2	2 3/4	9/16	5/8	1 1/2	5/8
HL200-2N	H2L200-2N	H3L200-2N	H4L200-2N	1600 MCM	2000 MCM	1600	2000	2	2 1/2	3	9/16	5/8	1 3/4	5/8
HL200-4	H2L200-4	H3L200-4	H4L200-4	1600 MCM	2000 MCM	1600	2000	3	2 5/8	2 3/4	9/16	5/8	1 1/2	5/8
HL200-4N	H2L200-4N	H3L200-4N	H4L200-4N	1600 MCM	2000 MCM	1600	2000	3	3	3	9/16	5/8	1 3/4	5/8

© 2011, AFL, all rights reserved. PP-3-00370, Revision 1, 8.5.13
Specifications are subject to change without notice.

DOSSERT®

TYPE HLB, H2LB

A side entrance HERCULON™ variable type terminal for connecting wire or cable at right angles to terminal bar. Easily installed with any ordinary wrench. Serrated pressure bar confines conductor making for high contact efficiency. Its rugged design permits it to be re-used over and over. H2LB is for connecting two cables at right angle to terminal bar.

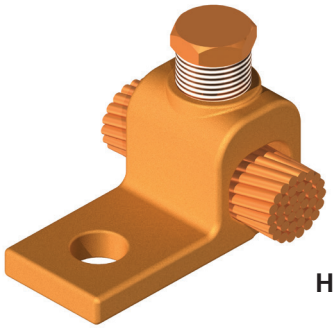

HLB

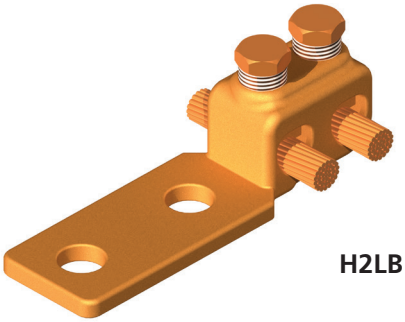

H2LB

Material

Copper Alloy

Hardware

Everdur pressure bolt

Note

For two 500 MCM to 4 hole 3" NEMA pad order: H2LB50-4N

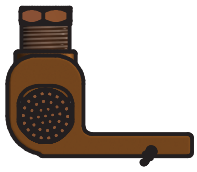

HLB



H2LB

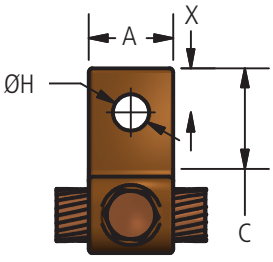

FIG. 1

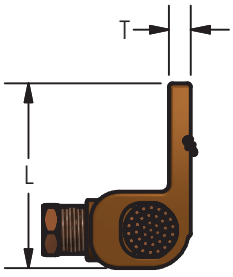

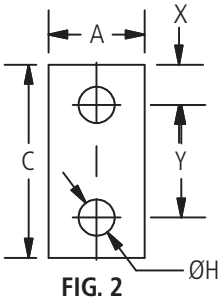

FIG. 2

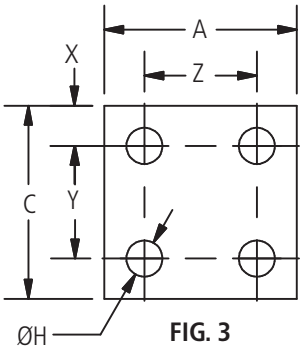

FIG. 3

© 2011, AFL, all rights reserved. PP-3-00372, Revision 1, 8.5.13
Specifications are subject to change without notice.

DOSSERT®

TYPE HLB, H2LB

Ordering Information

CATALOG NUMBER		CABLE SIZE		FIG. NO.	DIMENSIONS IN INCHES							
ONE CABLE	TWO CABLES	MINIMUM	MAXIMUM		A	C	H	L	X	Y	Z	T
HLB4-1	H2LB4-1	8 SOL	4 STR	1	1/2	5/8	9/32	1 1/4	5/16	-	-	3/16
HLB4-2	H2LB4-2	8 SOL	4 STR	2	1/2	1 1/4	9/32	1 7/8	5/16	5/8	-	3/16
HLB8-1	H2LB8-1	4 SOL	1 STR	1	11/16	11/16	9/32	1 9/16	11/32	-	-	7/32
HLB8-2	H2LB8-2	4 SOL	1 STR	2	11/16	1 3/8	9/32	2 1/4	5/16	3/4	-	7/32
HLB13-1	H2LB13-1	1 STR	2/0 STR	1	13/16	7/8	7/16	1 7/8	7/16	-	-	7/32
HLB13-2	H2LB13-2	1 STR	2/0 STR	2	13/16	1 5/8	11/32	2 5/8	3/8	7/8	-	7/32
HLB21-1	H2LB21-1	2/0 STR	4/0 STR	1	1	1	7/16	2 1/4	1/2	-	-	1/4
HLB21-2	H2LB21-2	2/0 STR	4/0 STR	2	1	1 3/4	7/16	3	3/8	1	-	1/4
HLB21-2N	H2LB21-2N	2/0 STR	4/0 STR	2	1 1/2	3	9/16	4 1/4	5/8	1 3/4	-	1/4
HLB30-1	H2LB30-1	4/0 STR	300 MCM	1	1 3/16	1 1/4	9/16	2 5/8	5/8	-	-	5/16
HLB30-2	H2LB30-2	4/0 STR	300 MCM	2	1 3/16	2	7/16	3 3/8	7/16	1	-	5/16
HLB30-2N	H2LB30-2N	4/0 STR	300 MCM	2	1 1/2	3	9/16	4 1/2	5/8	1 3/4	-	5/16
HLB35-1	H2LB35-1	250 MCM	350 MCM	1	1 3/16	1 1/4	9/16	2 5/8	5/8	-	-	5/16
HLB35-2	H2LB35-2	250 MCM	350 MCM	2	1 3/16	2	7/16	3 3/8	7/16	1	-	5/16
HLB35-2N	H2LB35-2N	250 MCM	350 MCM	2	1 1/2	3	9/16	4 1/2	5/8	1 3/4	-	5/16
HLB50-1	H2LB50-1	300 MCM	500 MCM	1	1 3/8	1 3/8	9/16	3	11/16	-	-	11/32
HLB50-2	H2LB50-2	300 MCM	500 MCM	2	1 3/8	2	7/16	3 9/16	7/16	1	-	11/32
HLB50-2N	H2LB50-2N	300 MCM	500 MCM	2	1 1/2	3	9/16	4 5/8	5/8	1 3/4	-	11/32
HLB50-4	H2LB50-4	300 MCM	500 MCM	3	2	2	7/16	3 9/16	7/16	1	1	11/32
HLB50-4N	H2LB50-4N	300 MCM	500 MCM	3	3	3	9/16	4 5/8	5/8	1 3/4	1 3/4	11/32
HLB75-1	H2LB75-1	500 MCM	750 MCM	1	1 5/8	1 3/4	11/16	3 5/8	7/8	-	-	3/8
HLB75-2	H2LB75-2	500 MCM	750 MCM	2	1 5/8	2 1/4	9/16	4 1/8	9/16	1 1/8	-	3/8
HLB75-2N	H2LB75-2N	500 MCM	750 MCM	2	1 5/8	3	9/16	4 7/8	5/8	1 3/4	-	3/8
HLB75-4	H2LB75-4	500 MCM	750 MCM	3	2 1/4	2 1/4	7/16	4 1/8	5/8	1	1	3/8
HLB75-4N	H2LB75-4N	500 MCM	750 MCM	3	3	3	9/16	4 7/8	5/8	1 3/4	1 3/4	3/8
HLB100-1	H2LB100-1	750 MCM	1000 MCM	1	1 7/8	1 7/8	11/16	4 1/8	15/16	-	-	1/2
HLB100-2	H2LB100-2	750 MCM	1000 MCM	2	1 7/8	2 1/2	9/16	4 5/8	5/8	1 1/4	-	1/2
HLB100-2N	H2LB100-2N	750 MCM	1000 MCM	2	1 7/8	3	9/16	4 7/8	5/8	1 3/4	-	1/2
HLB100-4	H2LB100-4	750 MCM	1000 MCM	3	2 1/2	2 1/2	7/16	4 5/8	5/8	1 1/4	1 1/4	1/2
HLB100-4N	H2LB100-4N	750 MCM	1000 MCM	3	3	3	9/16	4 7/8	5/8	1 3/4	1 3/4	1/2
HLB150-1	H2LB150-1	1000 MCM	1500 MCM	1	2 1/8	2 1/8	13/16	4 1/2	1 1/16	-	-	9/16
HLB150-2	H2LB150-2	1000 MCM	1500 MCM	2	2 1/8	2 5/8	9/16	4 3/4	5/8	1 3/8	-	9/16
HB150-2N	HB150-2N	1000 MCM	1500 MCM	2	2 1/8	3	9/16	4 7/8	5/8	1 3/4	-	9/16
HLB150-4	H2LB150-4	1000 MCM	1500 MCM	3	2 5/8	2 5/8	9/16	4 3/4	5/8	1 3/8	1 3/8	9/16
HLB150-4N	H2LB150-4N	1000 MCM	1500 MCM	3	3	3	9/16	4 7/8	5/8	1 3/4	1 3/4	9/16

© 2011, AFL, all rights reserved. PP-3-00372, Revision 1, 8.5.13
Specifications are subject to change without notice.

DOSSERT®

TYPE HLS, HLSC

Copper Terminal for Cable to Stud Posts

An efficient and easy to install variable type terminal for connecting wires or cables to studposts of electrical equipment. The wire or cable connector is securely clamped in position by merely tightening the pressure screw. The full bearing length of cable is clamped by means of an internal pressure pad curved to fit the conductor.

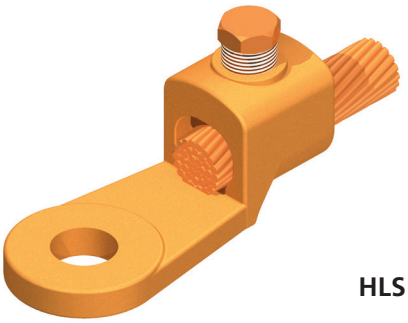

HLS

Material

Copper Alloy

Hardware

Everdur pressure bolt

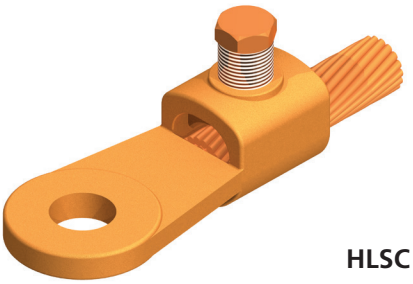

HLSC

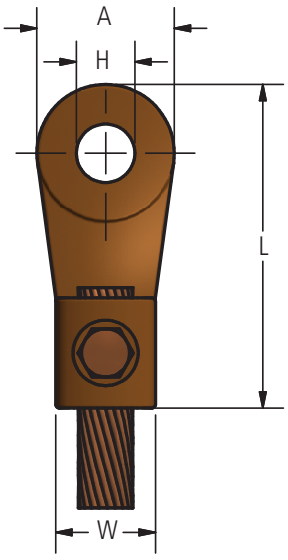

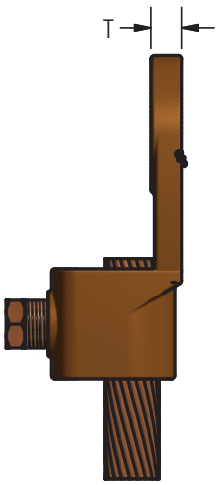

HLS

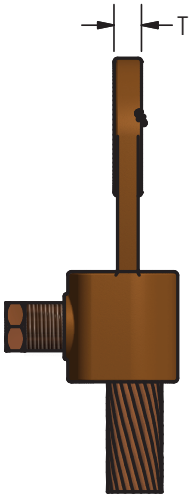

HLSC

Ordering Information

CATALOG NUMBER		CABLE SIZE		STUD DIA.	DIMENSIONS IN INCHES				
HLS	HLSC	MIN	MAX		A	H	L	T	W
HLS1-25	HLSC1-25	14 SOL	8 STR	1/4	3/4	9/32	1 1/2	3/16	15/32
HLS4-25	HLSC4-25	8 SOL	4 STR	1/4	3/4	9/32	1 9/16	1/4	1/2
HLS8-25	HLSC8-25	4 SOL	1 STR	1/4	3/4	9/32	1 11/16	9/32	11/16
HLS1-38	HLSC1-38	14 SOL	8 STR	3/8	1	13/32	1 3/4	3/16	15/32
HLS4-38	HLSC4-38	8 SOL	4 STR	3/8	1	13/32	1 13/16	1/4	1/2
HLS8-38	HLSC8-38	4 SOL	1 STR	3/8	1	13/32	1 15/16	9/32	11/16
HLS8-50	HLSC8-50	4 SOL	1 STR	1/2	1 1/4	17/32	2 3/16	1/4	11/16
HLS13-50	HLSC13-50	1 STR	2/0 STR	1/2	1 1/4	17/32	2 7/16	9/32	13/16
HLS21-50	HLSC21-50	2/0 STR	4/0 STR	1/2	1 1/4	17/32	2 11/16	5/16	1
HLS30-63	HLSC30-63	4/0 STR	300 MCM	5/8	1 1/2	21/32	3 3/16	3/8	1 3/16
HLS35-63	HLSC35-63	250 MCM	350 MCM	5/8	1 1/2	21/32	3 1/4	3/8	1 1/4
HLS50-63	HLSC50-63	300 MCM	500 MCM	5/8	1 1/2	21/32	3 1/4	3/8	1 11/32
HLS75-63	HLSC75-63	500 MCM	750 MCM	5/8	1 1/2	21/32	3 1/2	7/16	1 19/32
HLS30-75	HLSC30-75	4/0 STR	300 MCM	3/4	1 7/8	25/32	3 9/16	3/8	1 3/16
HLS35-75	HLSC35-75	250 MCM	350 MCM	3/4	1 7/8	25/32	3 5/8	3/8	1 1/4
HLS50-75	HLSC50-75	300 MCM	500 MCM	3/4	1 7/8	25/32	3 5/8	3/8	1 11/32
HLS75-75	HLSC75-75	500 MCM	750 MCM	3/4	1 7/8	25/32	3 7/8	7/16	1 19/32
HLS50-100	HLSC50-100	300 MCM	500 MCM	1	2 1/2	1.03125	4 1/4	3/8	1 11/32
HLS75-100	HLSC75-100	500 MCM	750 MCM	1	2 1/2	1.03125	4 1/2	7/16	1 19/32
HLS100-100	HLSC100-100	750 MCM	1000 MCM	1	2 1/2	1.03125	4 13/16	1/2	1 15/16

© 2011, AFL, all rights reserved. PP-3-00373, Revision 0, 3.10.11
Specifications are subject to change without notice.

© 2011, AFL, all rights reserved. PP-3-00394, Revision 4, 1.27.2023

DOSSERT®

TYPE PFTS

Pipe To Flat Bar Tee Connector

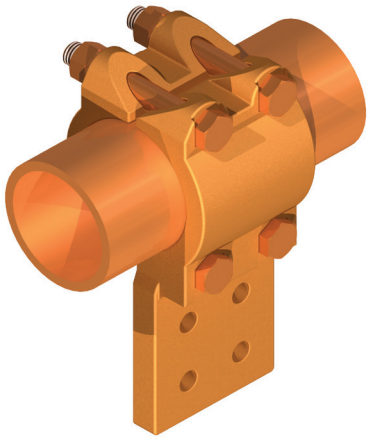

A tee connector for joining a single bar tap conductor to a tubular bus run. Made of high conductivity cast copper alloy.

Material

Copper Alloy

Hardware

Everdur bolts, nuts, and lockwashers.

Notes

- For finish on both surfaces, add suffix "F" to end of catalog number. EX: PFTS100-1-2NF
- For tin plating add suffix "-SN" to end of catalog number. EX: PFTS100-1-2N-SN

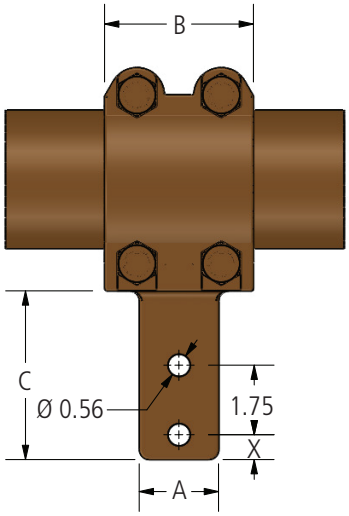

FIG. 1

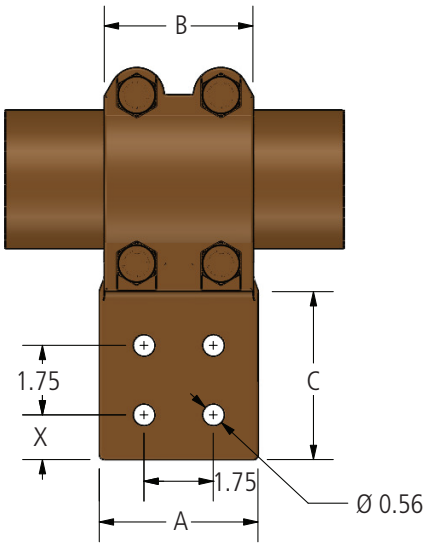

FIG. 2

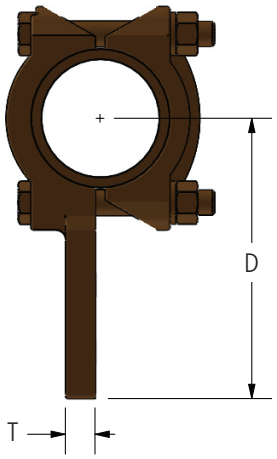

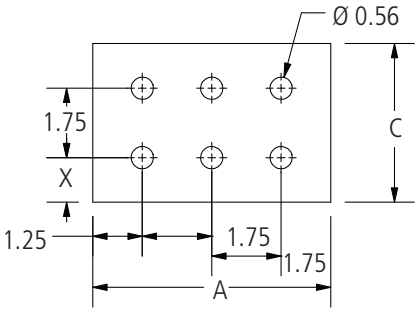

FIG. 3

© 2011, AFL, all rights reserved. PP-3-00394, Revision 4, 2.1.2023
Specifications are subject to change without notice.

DOSSERT®

TYPE PFTS
Pipe To Flat Bar Tee Connector

Ordering Information

CATALOG NUMBER	SPS	FIG. NO.	DIMENSIONS IN INCHES						BOLT SIZE
			A	B	C	D	T	X	
PFTS75-1-2N	3/4	1	2.00	2.00	3.00	4.63	0.38	0.63	1/2
PFTS75-1-3N	3/4	2	3.00	2.00	3.00	4.50	0.31	0.63	3/8
PFTS100-1-2N	1	1	2.00	2.13	3.00	4.63	0.38	0.63	1/2
PFTS100-1-3N	1	2	3.00	2.13	3.00	4.81	0.38	0.63	1/2
PFTS100-1-4N	1	2	4.00	2.13	3.00	4.81	0.38	0.63	1/2
PFTS125-1-2N	1 1/4	1	2.00	2.50	3.00	4.94	0.50	0.63	1/2
PFTS125-1-3N	1 1/4	2	3.00	2.50	3.00	4.94	0.50	0.63	1/2
PFTS125-1-4N	1 1/4	2	4.00	2.50	3.00	4.94	0.50	0.63	1/2
PFTS150-1-2N	1 1/2	1	2.00	2.63	3.00	5.06	0.50	0.63	1/2
PFTS150-1-3N	1 1/2	2	3.00	2.63	3.00	5.06	0.50	0.63	1/2
PFTS150-1-4N4	1 1/2	2	4.00	2.63	4.00	6.06	0.50	1.13	1/2
PFTS150-1-4N	1 1/2	2	4.00	2.63	3.00	5.06	0.50	0.63	1/2
PFTS200-1-2N	2	1	2.00	2.75	3.00	5.31	0.63	0.63	1/2
PFTS200-1-3N	2	2	3.00	2.75	3.00	5.31	0.63	0.63	1/2
PFTS200-1-4N4	2	2	4.00	2.75	4.00	6.31	0.63	1.13	1/2
PFTS200-1-4N	2	2	4.00	2.75	3.00	5.31	0.63	0.63	1/2
PFTS250-1-2N	2 1/2	1	2.00	2.75	3.00	5.56	0.63	0.63	1/2
PFTS250-1-3N	2 1/2	2	3.00	2.75	3.00	5.56	0.50	0.63	1/2
PFTS250-1-4N4	2 1/2	2	4.00	2.75	4.00	6.31	0.75	1.13	1/2
PFTS250-1-4N	2 1/2	2	4.00	2.75	3.00	5.56	0.75	0.63	1/2
PFTS300-1-2N	3	1	2.00	3.25	3.00	6.06	0.75	0.63	5/8
PFTS300-1-3N	3	2	3.00	3.25	3.00	6.06	0.75	0.63	5/8
PFTS300-1-4N4	3	2	4.00	3.25	4.00	7.06	0.75	1.13	5/8
PFTS300-1-4N	3	2	4.00	3.25	3.00	6.06	0.75	0.63	5/8
PFTS300-1-6N4	3	3	6.00	3.25	4.00	7.06	0.75	1.13	5/8
PFTS350-1-2N	3 1/2	1	2.00	3.25	3.25	6.31	0.88	0.63	5/8
PFTS350-1-3N	3 1/2	2	3.00	3.25	3.00	6.31	0.88	0.63	5/8
PFTS350-1-4N4	3 1/2	2	4.00	3.25	4.00	7.31	0.88	1.13	5/8
PFTS350-1-4N	3 1/2	2	4.00	3.25	3.00	6.31	0.88	0.63	5/8
PFTS400-1-3N	4	2	3.00	3.25	3.00	6.56	0.88	0.63	5/8
PFTS400-1-4N4	4	2	4.00	3.25	4.00	7.56	0.88	1.13	5/8
PFTS400-1-4N	4	2	4.00	3.25	3.00	6.56	0.88	0.63	5/8
PFTS500-1-3N	5	2	3.00	3.75	3.00	7.13	1.00	0.63	5/8
PFTS500-1-4N4	5	2	4.00	3.75	4.00	8.13	1.00	1.13	5/8
PFTS500-1-4N	5	2	4.00	3.75	3.00	7.13	1.00	0.63	5/8
PFTS500-1-6N4	5	3	6.00	3.75	4.00	8.13	1.00	1.13	5/8
PFTS500R-1-4N4	5 OD	2	4.00	3.25	4.00	7.81	1.00	1.13	5/8
PFTS600-1-4N4	6	2	4.00	5.75	4.00	8.75	1.25	1.13	5/8

© 2011, AFL, all rights reserved. PP-3-00394, Revision 4, 2.1.2023
Specifications are subject to change without notice.

DOSSERT®

TYPE Q2LB

Copper Compact Two Conductor Variable Angle Terminal

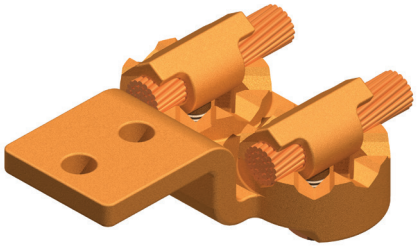

A double conductor compact terminal lug which accepts wide range of cable and various angular settings. Extremely useful for small clearance application.

Material

Copper Alloy

Hardware

Everdur nuts and lockwashers.

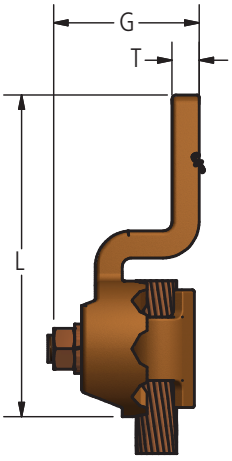

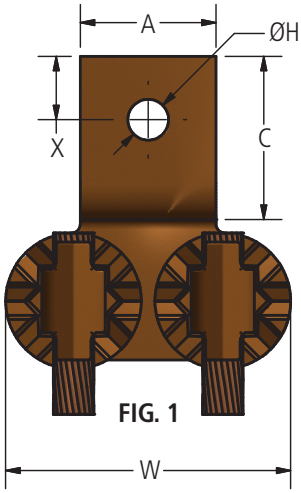

FIG. 1

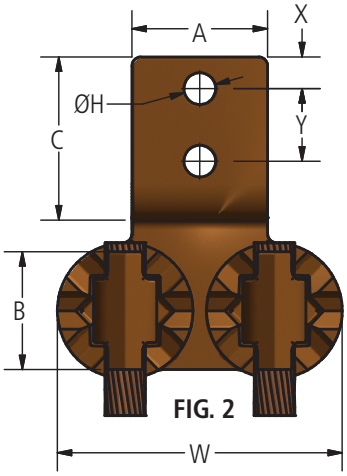

FIG. 2

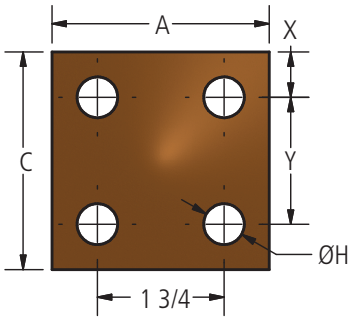

FIG. 3

Ordering Information

CATALOG NUMBER	CABLE RANGE		FIG. NO.	DIMENSIONS IN INCHES									
	MIN	MAX		A	B	C	G	H	L	T	W	X	Y
Q2LB6-1	8 SOL.	2 STR.	1	1 1/4	1 1/16	13/16	1 3/8	7/16	2 1/2	1/4	2 5/16	13/32	-
Q2LB21-1	1/0 STR	4/0 STR.	1	1 7/8	1 7/8	1 3/4	2 1/4	9/16	4 5/16	3/8	3 15/16	7/8	-
Q2LB21-2	1/0 STR	4/0 STR.	2	1 7/8	1 7/8	1 7/8	2 1/4	7/16	4 7/16	3/8	3 15/16	7/16	-
Q2LB21-4	1/0 STR	4/0 STR.	3	2	1 7/8	2	2 1/4	7/16	4 3/8	5/16	3 15/16	1/2	-
Q2LB50-2	1/0 STOL	500 MCM	2	2 1/2	2 3/16	1 7/8	2 5/8	7/16	4 5/8	3/8	4 1/4	7/16	-
Q2LB50-4N	250 MCM	500 MCM	3	3	1 15/16	3	2 5/8	9/16	6 3/4	3/8	4 3/16	5/8	1 3/4
Q2LB75-2	350 MCM	750 MCM	2	3	2 1/4	2	3 1/4	9/16	6 5/8	3/8	5 1/8	7/16	1 1/8
Q2LB80-4	500 MCM	800 MCM	3	3	2 5/16	1 7/8	3 3/8	7/16	6 5/16	3/8	5 1/8	7/16	-
Q2LB100-4N	500 MCM	1000 MCM	3	3	2 5/8	3	3 3/8	9/16	6 3/4	1/2	5 5/8	5/8	1 3/4

© 2011, AFL, all rights reserved. PP-3-00422, Revision 1, 8.5.13
Specifications are subject to change without notice.

DOSSERT®

TYPE QLB, QLLB

Copper Variable Entrance Angle Terminal

An extremely versatile terminal which will accept a wide range of conductor sizes. Connector is constructed so as to allow cable entrance from various angles and to provide strong clamping pressure at points of contact.

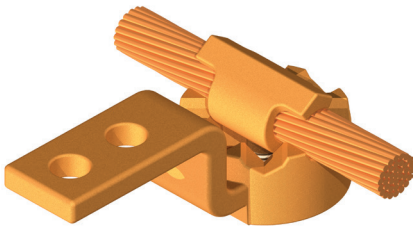

QLB

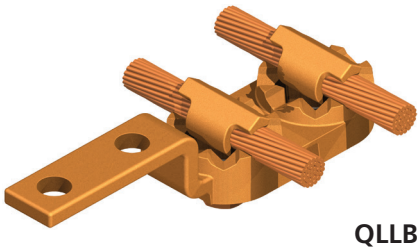

QLLB

Material

Copper Alloy

Hardware

Everdur bolts, nuts and lockwashers

Notes

- Contact pads furnished to any specification of drilled or undrilled hole size and spacing.
- For one cable variable terminal for a 500mcm cable, only one "L" should be placed in the catalog number, EX: QLB50-4N
- For two cable variable terminal for a 500mcm cable, place two "L"s in the catalog number, EX: QLLB50-4N
- For tin plating add suffix "-SN" to end of catalog number, EX: QLLB50-4N-SN

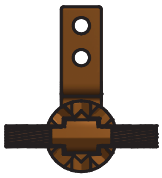

QLB

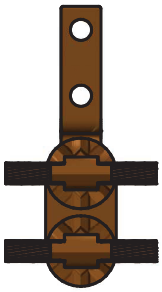

QLLB

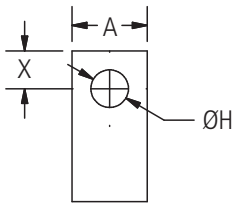

FIG. 1

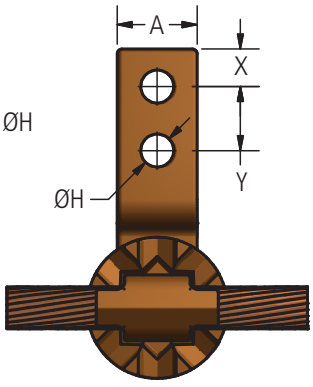

FIG. 2

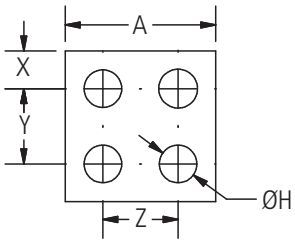

FIG. 3

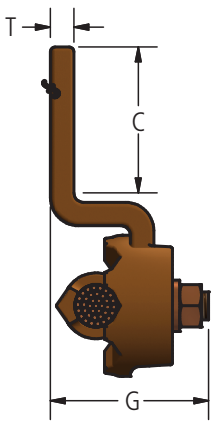

© 2011, AFL, all rights reserved. PP-3-00426, Revision 1, 8.5.13
Specifications are subject to change without notice.

DOSSERT®

TYPE QLB, QLLB

Copper Variable Entrance Angle Terminal

Ordering Information

CATALOG NUMBER		CABLE RANGE		FIG. NO.	DIMENSIONS IN INCHES							
QLB	QLLB	MIN	MAX		A	C	G	H	T	X	Y	Z
QLB6-1	QLLB6-1	#8 SOL	#2 STR	1	13/16	7/8	1 3/8	7/16	1/4	13/32	-	-
QLB6-2	QLLB6-2	#8 SOL	#2 STR	2	3/4	1 1/2	1 3/8	11/32	1/4	3/8	3/4	-
QLB10-1	QLLB10-1	#2 STR	1/0 STR	1	7/8	7/8	1 1/2	7/16	1/4	7/16	-	-
QLB10-2	QLLB10-2	#2 STR	1/0 STR	2	7/8	1 5/8	1 1/2	11/32	1/4	11/32	7/8	-
QLB21-1	QLLB21-1	1/0 STR	4/0 STR	1	1 1/16	1 1/8	1 3/4	7/16	5/16	17/32	-	-
QLB21-2	QLLB21-2	1/0 STR	4/0 STR	2	1 1/16	1 7/8	1 3/4	7/16	5/16	13/32	1	-
QLB21-2N	QLLB21-2N	1/0 STR	4/0 STR	2	1 1/16	3	1 3/4	9/16	5/16	5/8	1 3/4	-
QLB50-1	QLLB50-1	250 MCM	500 MCM	1	1 3/8	1 1/2	2 1/4	9/16	3/8	3/4	-	-
QLB50-2	QLLB50-2	250 MCM	500 MCM	2	1 3/8	1 7/8	2 1/4	7/16	3/8	7/16	1	-
QLB50-2N	QLLB50-2N	250 MCM	500 MCM	2	1 3/8	3	2 1/4	9/16	3/8	5/8	1 3/4	-
QLB50-4	QLLB50-4	250 MCM	500 MCM	3	1 7/8	1 7/8	2 1/4	7/16	3/8	7/16	1	1
QLB50-4N	QLLB50-4N	250 MCM	500 MCM	3	3	3	2 1/4	9/16	3/8	5/8	1 3/4	1 3/4
QLB80-1	QLLB80-1	500 MCM	800 MCM	1	1 5/8	1 5/8	2 3/4	11/16	3/8	7/8	-	-
QLB80-2	QLLB80-2	500 MCM	800 MCM	2	1 5/8	2	2 3/4	7/16	3/8	7/16	1 1/8	-
QLB80-2N	QLLB80-2N	500 MCM	800 MCM	2	1 5/8	3	2 3/4	9/16	3/8	5/8	1 3/4	-
QLB80-4	QLLB80-4	500 MCM	800 MCM	3	1 7/8	2	2 3/4	7/16	3/8	7/16	1	1
QLB80-4N	QLLB80-4N	500 MCM	800 MCM	3	3	3	2 3/4	9/16	3/8	5/8	1 3/4	1 3/4
QLB100-1	QLLB100-1	750 MCM	1000 MCM	1	1 7/8	2	2 7/8	11/16	1/2	1	-	-
QLB100-2	QLLB100-2	750 MCM	1000 MCM	2	1 7/8	2 3/8	2 7/8	7/16	1/2	9/16	1 1/4	-
QLB100-2N	QLLB100-2N	750 MCM	1000 MCM	2	1 7/8	3	2 7/8	9/16	1/2	5/8	1 3/4	-
QLB100-4	QLLB100-4	750 MCM	1000 MCM	3	2 1/8	2 3/8	2 7/8	7/16	1/2	1/2	1 1/8	1 1/8
QLB100-4N	QLLB100-4N	750 MCM	1000 MCM	3	3	3	2 7/8	9/16	1/2	5/8	1 3/4	1 3/4

© 2011, AFL, all rights reserved. PP-3-00426, Revision 1, 8.5.13
Specifications are subject to change without notice.

DOSSERT®

TYPE SCB-90H, SCB-90V

Copper Stud Connector To Flat Bar

A single bar connector for connecting bar conductors at right angles to a threaded or smooth stud. Furnished complete with all clamping bolts.

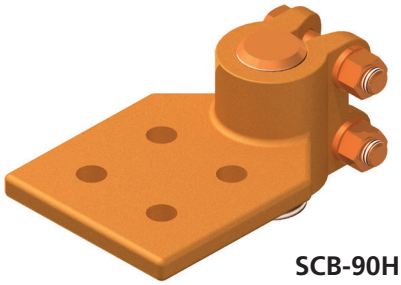

SCB-90H

Material

Copper Alloy

Hardware

Everdur bolts, nuts and lockwashers

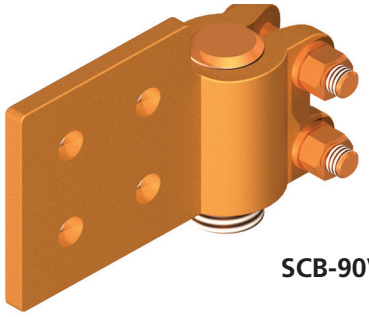

SCB-90V

Note

Also available for other sizes of studs and bar arrangements.

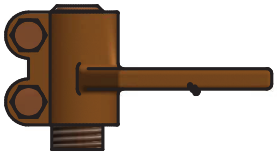

SCB-90H

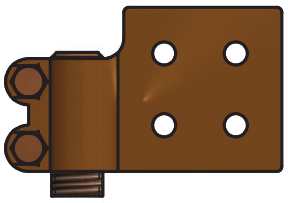

SCB-90V

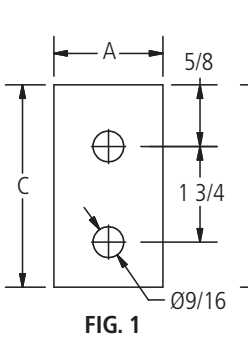

FIG. 1

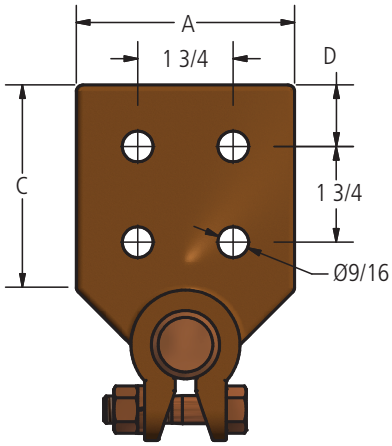

FIG. 2

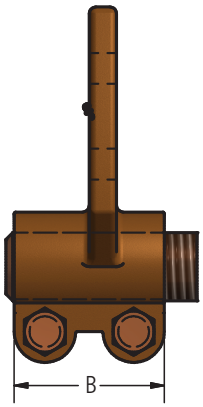

Ordering Information

CATALOG NUMBER		STUD DIAMETER	THREADS PER INCH	FIG. NO.	DIMENSIONS IN INCHES				BOLT SIZE
SCV-90H SERIES	SCV-90V SERIES				A	B	C	D	
SCB50-1-2N-90H-T13	SCB50-1-2N-90V-T13	1/2	13	1	2	2	3	5/8	3/8
SCB50-1-3N-90H-T13	SCB50-1-3N-90V-T13	1/2	13	2	3	2	3	5/8	3/8
SCB75-1-2N-90H-T16	SCB75-1-2N-90V-T16	3/4	16	1	2	2	3	5/8	3/8
SCB75-1-3N-90H-T16	SCB75-1-3N-90V-T16	3/4	16	2	3	2	3	5/8	3/8
SCB100-1-2N-90H-T14	SCB100-1-2N-90V-T14	1	14	1	2	2	3	5/8	3/8
SCB100-1-3N-90H-T14	SCB100-1-3N-90V-T14	1	14	2	3	2 3/4	3	5/8	1/2
SCB100-1-4N-90H-T14	SCB100-1-4N-90V-T14	1	14	2	4	2 3/4	3	1 1/8	1/2
SCB112-1-2N-90H-T12	SCB112-1-2N-90V-T12	1 1/8	12	1	2	2	3	5/8	3/8
SCB112-1-3N-90H-T12	SCB112-1-3N-90V-T12	1 1/8	12	2	3	2 3/4	3	5/8	1/2
SCB112-1-4N-90H-T12	SCB112-1-4N-90V-T12	1 1/8	12	2	4	2 3/4	3	1 1/8	1/2
SCB125-1-2N-90H-T12	SCB125-1-2N-90V-T12	1 1/4	12	1	2	2	3	5/8	3/8
SCB125-1-3N-90H-T12	SCB125-1-3N-90V-T12	1 1/4	12	2	3	2 3/4	3	5/8	1/2
SCB125-1-4N-90H-T12	SCB125-1-4N-90V-T12	1 1/4	12	2	4	2 3/4	3	1 /18	1/2
SCB150-1-2N-90H-T12	SCB150-1-2N-90V-T12	1 1/2	12	1	2	2	3	5/8	3/8
SCB150-1-3N-90H-T12	SCB150-1-3N-90V-T12	1 1/2	12	2	3	2 3/4	3	5/8	1/2
SCB150-1-4N-90H-T12	SCB150-1-4N-90V-T12	1 1/2	12	2	4	2 3/4	3	1 1/8	1/2
SCB200-1-2N-90H-T12	SCB200-1-2N-90V-T12	2	12	1	2	2	3	5/8	3/8
SCB200-1-3N-90H-T12	SCB200-1-3N-90V-T12	2	12	2	3	2 3/4	3	5/8	1/2
SCB200-1-4N-90H-T12	SCB200-1-4N-90V-T12	2	12	2	4	2 3/4	3	1 1/8	1/2

© 2011, AFL, all rights reserved. PP-3-00446, Revision 3, 3.28.2023
Specifications are subject to change without notice.

DOSSERT®

TYPE SCB-F

Stud Connector to Flat Bar Type

A single or multi-bar connector for connecting one or more flat bars to a threaded or plain stud. Can be furnished to accommodate stud diameters or threads per inch other than listed below.

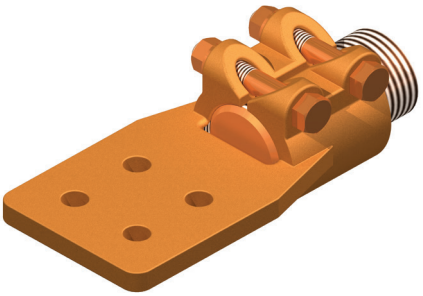

Material

High Conductiviity Cast Copper Alloy

Hardware

Everdur bolts, nuts and lockwashers

Note

For Tin Plating, add suffix "-SN" to end of catalog number. EX: SCB200-1/2F-4N4-T12-SN

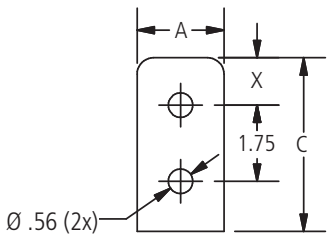

FIG. 1

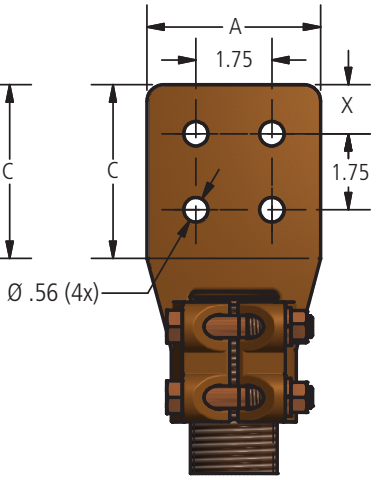

FIG. 2

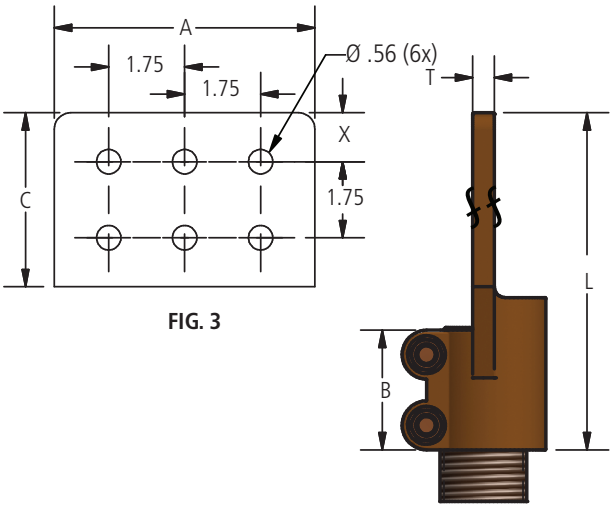

FIG. 3

Ordering Information

CATALOG NUMBER	STUD DIAMETER	THREADS PER INCH	FIG. NO.	DIMENSIONS IN INCHES					
				A	B	C	L	T	X
SCB63-1/4F-2N-T18	5/8	18	1	2	2	3	5 1/2	1/4	5/8
SCB63-1/4F-3N-T18	5/8	18	2	3	2	3	5 1/2	1/4	5/8
SCB63-1/4F-4N-T18	5/8	18	2	4	2	3	5 1/2	1/4	5/8
SCB63-1/4F-4N4-T18	5/8	18	2	4	2	4	6 1/2	1/4	1 1/8
SCB63-3/8F-2N-T18	5/8	18	1	2	2	3	5 1/2	3/8	5/8
SCB63-3/8F-2N-T11	5/8	11	1	2	2	3	5 1/2	3/8	5/8
SCB63-3/8F-3N-T18	5/8	18	2	3	2	3	5 1/2	3/8	5/8
SCB63-3/8F-3N-T11	5/8	11	2	3	2	3	5 1/2	3/8	5/8
SCB63-3/8F-3N-TM16	5/8	M16 x 2.0	2	3	2	3	5 1/2	3/8	5/8
SCB63-3/8F-4N-T18	5/8	18	2	4	2	3	5 1/2	3/8	5/8
SCB63-3/8F-4N4-T18	5/8	18	2	4	2	4	6 1/2	3/8	1 1/8
SCB75-1/4F-2N-T16	3/4	16	1	2	2	3	5 1/2	1/4	5/8
SCB75-1/4F-3N-T16	3/4	16	2	3	2	3	5 1/2	1/4	5/8
SCB75-1/4F-4N-T16	3/4	16	2	4	2	3	5 1/2	1/4	5/8
SCB75-1/4F-4N4-T16	3/4	16	2	4	2	4	6 1/2	1/4	1 1/8
SCB75-3/8F-2N-T16	3/4	16	1	2	2	3	5 1/2	3/8	5/8
SCB75-3/8F-3N-T16	3/4	16	2	3	2	3	5 1/2	3/8	5/8
SCB75-3/8F-4N-T16	3/4	16	2	4	2	3	5 1/2	3/8	5/8
SCB75-3/8F-4N4-T16	3/4	16	2	4	2	4	6 1/2	3/8	1 1/8

© 2011, AFL, all rights reserved. PP-3-00447, Revision 4, 3.24.2023
Specifications are subject to change without notice.

DOSSERT®

TYPE SCB-F

Stud Connector to Flat Bar Type

Ordering Information

CATALOG NUMBER	STUD DIAMETER	THREADS PER INCH	FIG. NO.	DIMENSIONS IN INCHES					
				A	B	C	L	T	X
SCB100-1/4F-2N-T14	1	14	1	2	2	3	5 3/8	1/4	5/8
SCB100-1/4F-3N-T14	1	14	2	3	2 1/4	3	5 5/8	1/4	5/8
SCB100-1/4F-4N-T14	1	14	2	4	2 1/4	3	5 5/8	1/4	5/8
SCB100-1/4F-4N4-T14	1	14	2	4	2 1/4	4	6 5/8	1/4	1 1/8
SCB100-1/4F-3N-T14	1	14	2	3	2 1/4	3	5 5/8	1/4	5/8
SCB100-1/4F-4N-T14	1	14	2	4	2 1/4	3	5 5/8	1/4	5/8
SCB100-1/4F-4N4-T14	1	14	2	4	2 1/4	4	6 5/8	1/4	1 1/8
SCB100-3/8F-2N-T14	1	14	1	2	2	3	5 3/8	3/8	5/8
SCB100-3/8F-3N-T14	1	14	2	3	2 1/4	3	5 5/8	3/8	5/8
SCB100-3/8F-4N-T14	1	14	2	4	2 1/4	3	5 5/8	3/8	5/8
SCB100-3/8F-4N4-T14	1	14	2	4	2 1/4	4	6 5/8	3/8	1 1/8
SCB100-1/2F-2N-T14	1	14	1	2	2	3	5 3/8	1/2	5/8
SCB100-1/2F-3N-T14	1	14	2	3	2 1/4	3	5 5/8	1/2	5/8
SCB100-1/2F-4N-T14	1	14	2	4	2 1/4	3	5 5/8	1/2	5/8
SCB100-1/2F-4N4-T14	1	14	2	4	2 1/4	4	6 5/8	1/2	1 1/8
SCB112-1/4F-2N-T12	1 1/8	12	1	2	2	3	5 1/2	1/4	5/8
SCB112-1/4F-3N-T12	1 1/8	12	2	3	2 1/4	3	5 3/4	1/4	5/8
SCB112-1/4F-4N-T12	1 1/8	12	2	4	2 1/4	3	5 3/4	1/4	5/8
SCB112-1/4F-4N4-T12	1 1/8	12	2	4	2 1/4	4	6 3/4	1/4	1 1/8
SCB112-3/8F-2N-T12	1 1/8	12	1	2	2	3	5 1/2	3/8	5/8
SCB112-3/8F-3N-T12	1 1/8	12	2	3	2 1/4	3	5 3/4	3/8	5/8
SCB112-3/8F-4N-T12	1 1/8	12	2	4	2 1/4	3	5 3/4	3/8	5/8
SCB112-3/8F-4N4-T12	1 1/8	12	2	4	2 1/4	4	6 3/4	3/8	1 1/8
SCB112-1/2F-2N-T12	1 1/8	12	1	2	2	3	5 1/2	1/2	5/8
SCB112-1/2F-3N-T12	1 1/8	12	2	3	2 1/4	3	5 3/4	1/2	5/8
SCB112-1/2F-4N-T12	1 1/8	12	2	4	2 1/4	3	5 3/4	1/2	5/8
SCB112-1/2F-4N4-T12	1 1/8	12	2	4	2 1/4	4	6 3/4	1/2	1 1/8
SCB125-1/4F-2N-T12	1 1/4	12	1	2	2	3	5 1/2	1/4	5/8
SCB125-1/4F-3N-T12	1 1/4	12	2	3	2 3/4	3	6 1/4	1/4	5/8
SCB125-1/4F-4N-T12	1 1/4	12	2	4	2 3/4	3	6 1/4	1/4	5/8
SCB125-1/4F-4N4-T12	1 1/4	12	2	4	2 3/4	4	7 1/4	1/4	1 1/8
SCB125-3/8F-2N-T12	1 1/4	12	1	2	2	3	5 1/2	3/8	5/8
SCB125-3/8F-3N-T12	1 1/4	12	2	3	2 3/4	3	6 1/4	3/8	5/8
SCB125-3/8F-4N-T12	1 1/4	12	2	4	2 3/4	3	6 1/4	3/8	5/8
SCB125-3/8F-4N4-T12	1 1/4	12	2	4	2 3/4	4	7 1/4	3/8	1 1/8
SCB125-1/2F-2N-T12	1 1/4	12	1	2	2	3	5 1/2	1/2	5/8
SCB125-1/2F-3N-T12	1 1/4	12	2	3	2 3/4	3	6 1/4	1/2	5/8
SCB125-1/2F-4N-T12	1 1/4	12	2	4	2 3/4	3	6 1/4	1/2	5/8
SCB125-1/2F-4N4-T12	1 1/4	12	2	4	2 3/4	4	7 1/4	1/2	1 1/8
SCB143-1/2F-4N4-T0	1 7/16	0	2	4	2 3/4	4	7 1/4	1/2	1 1/8
SCB150-3/8F-2N-T12	1 1/2	12	1	2	2	3	5 1/2	3/8	5/8
SCB150-3/8F-3N-T12	1 1/2	12	2	3	2 3/4	3	6 1/4	3/8	5/8
SCB150-3/8F-4N-T12	1 1/2	12	2	4	2 3/4	3	6 1/4	3/8	5/8
SCB150-3/8F-4N4-T12	1 1/2	12	2	4	2 3/4	4	7 1/4	3/8	1 1/8
SCB150-1/2F-2N-T12	1 1/2	12	1	2	2	3	5 1/2	1/2	5/8
SCB150-1/2F-3N-T12	1 1/2	12	2	3	2 3/4	3	6 1/4	1/2	5/8
SCB150-1/2F-4N-T12	1 1/2	12	2	4	2 3/4	3	6 1/4	1/2	5/8
SCB150-1/2F-4N4-T12	1 1/2	12	2	4	2 3/4	4	7 1/4	1/2	1 1/8
SCB150-1/2F-6N4-T12	1 1/2	12	3	6	2 3/4	4	7 5/8	1/2	1 1/8
SCB150-3/4F-2N-T12	1 1/2	12	1	2	2	3	5 1/2	3/4	5/8
SCB150-3/4F-3N-T12	1 1/2	12	2	3	2 3/4	3	6 1/4	3/4	5/8
SCB150-3/4F-4N-T12	1 1/2	12	2	4	2 3/4	3	6 1/4	3/4	5/8
SCB150-3/4F-4N4-T12	1 1/2	12	2	4	2 3/4	4	7 1/4	3/4	1 1/8
SCB150-1F-6N4-T12	1 1/2	12	3	6	2 3/4	4	7 5/8	1	1 1/8
SCB157-1/2F-4N4-T0	40MM	0	2	4	2 3/4	4	7 1/4	1/2	1 1/8
SCB175-3/8F-2N-T12	1 3/4	12	1	2	2 3/4	3	5 1/2	3/8	5/8
SCB175-3/8F-3N-T12	1 3/4	12	2	3	2 3/4	3	6 1/4	3/8	5/8
SCB175-3/8F-4N-T12	1 3/4	12	2	4	2 3/4	3	6 1/4	3/8	5/8
SCB175-3/8F-4N4-T12	1 3/4	12	2	4	2 3/4	4	7 1/4	3/8	1 1/8
SCB175-1/2F-2N-T12	1 3/4	12	1	2	2 3/4	3	5 1/2	1/2	5/8
SCB175-1/2F-3N-T12	1 3/4	12	2	3	2 3/4	3	6 1/4	1/2	5/8
SCB175-1/2F-4N-T12	1 3/4	12	2	4	2 3/4	3	6 1/4	1/2	5/8
SCB175-1/2F-4N4-T12	1 3/4	12	2	4	2 3/4	4	7 1/4	1/2	1 1/8

© 2011, AFL, all rights reserved. PP-3-00447, Revision 4, 3.24.2023
Specifications are subject to change without notice.

DOSSERT®

TYPE SCB-F

Stud Connector to Flat Bar Type

Ordering Information

CATALOG NUMBER	STUD DIAMETER	THREADS PER INCH	FIG. NO.	DIMENSIONS IN INCHES					
				A	B	C	L	T	X
SCB175-5/8F-2N-T12	1 3/4	12	1	2	2 3/4	3	5 1/2	5/8	5/8
SCB175-5/8F-3N-T12	1 3/4	12	2	3	2 3/4	3	6 1/4	5/8	5/8
SCB175-5/8F-4N-T12	1 3/4	12	2	4	2 3/4	3	6 1/4	5/8	5/8
SCB175-5/8F-4N4-T12	1 3/4	12	2	4	2 3/4	4	7 1/4	5/8	1 1/8
SCB175-3/4F-2N-T12	1 3/4	12	1	2	2 3/4	3	5 1/2	3/4	5/8
SCB175-3/4F-3N-T12	1 3/4	12	2	3	2 3/4	3	6 1/4	3/4	5/8
SCB175-3/4F-4N-T12	1 3/4	12	2	4	2 3/4	3	6 1/4	3/4	5/8
SCB175-3/4F-4N4-T12	1 3/4	12	2	4	2 3/4	4	7 1/4	3/4	1 1/8
SCB200-3/8F-2N-T12	2	12	1	2	2 3/4	3	5 1/2	3/8	5/8
SCB200-3/8F-3N-T12	2	12	2	3	2 3/4	3	6 1/4	3/8	5/8
SCB200-3/8F-4N-T12	2	12	2	4	2 3/4	3	6 1/4	3/8	5/8
SCB200-3/8F-4N4-T12	2	12	2	4	2 3/4	4	7 1/4	3/8	1 1/8
SCB200-1/2F-2N-T12	2	12	1	2	2 3/4	3	5 1/2	1/2	5/8
SCB200-1/2F-3N-T12	2	12	2	3	2 3/4	3	6 1/4	1/2	5/8
SCB200-1/2F-4N-T12	2	12	2	4	2 3/4	3	6 1/4	1/2	5/8
SCB200-1/2F-4N4-T12	2	12	2	4	2 3/4	4	7 1/4	1/2	1 1/8
SCB200-5/8F-2N-T12	2	12	1	2	2 3/4	3	5 1/2	5/8	5/8
SCB200-5/8F-3N-T12	2	12	2	3	2 3/4	3	6 1/4	5/8	5/8
SCB200-5/8F-4N-T12	2	12	2	4	2 3/4	3	6 1/4	5/8	5/8
SCB200-5/8F-4N4-T12	2	12	2	4	2 3/4	4	7 1/4	5/8	1 1/8
SCB200-5/8F-6N4-T12	2	12	3	6	2 3/4	4	7 5/8	5/8	1 1/8
SCB200-3/4F-2N-T12	2	12	1	2	2 3/4	3	5 1/2	3/4	5/8
SCB200-3/4F-3N-T12	2	12	2	3	2 3/4	3	6 1/4	3/4	5/8
SCB200-3/4F-4N-T12	2	12	2	4	2 3/4	3	6 1/4	3/4	5/8
SCB200-3/4F-4N4-T12	2	12	2	4	2 3/4	4	7 1/4	3/4	1 1/8
SCB200-1F-2N-T12	2	12	1	2	2 3/4	3	5 1/2	1	5/8
SCB200-1F-3N-T12	2	12	2	3	2 3/4	3	6 1/4	1	5/8
SCB200-1F-4N-T12	2	12	2	4	2 3/4	3	6 1/4	1	5/8
SCB200-1F-4N4-T12	2	12	2	4	2 3/4	4	7 1/4	1	1 1/8
SCB200-1F-6N4-T12	2	12	3	6	2 3/4	4	7 5/8	1	1 1/8
SCB225-1/2F-2N-T12	2 1/4	12	1	2	2 3/4	3	5 1/2	1/2	5/8
SCB225-1/2F-3N-T12	2 1/4	12	2	3	2 3/4	3	6 1/4	1/2	5/8
SCB225-1/2F-4N-T12	2 1/4	12	2	4	2 3/4	3	6 1/2	1/2	5/8
SCB225-1/2F-4N4-T12	2 1/4	12	2	4	2 3/4	4	7 1/4	1/2	1 1/8
SCB225-5/8F-2N-T12	2 1/4	12	1	2	2 3/4	3	5 1/2	5/8	5/8
SCB225-5/8F-3N-T12	2 1/4	12	2	3	2 3/4	3	6 1/4	5/8	5/8
SCB225-5/8F-4N-T12	2 1/4	12	2	4	2 3/4	3	6 1/4	5/8	5/8
SCB225-5/8F-4N4-T12	2 1/4	12	2	4	2 3/4	4	7 1/4	5/8	1 1/8
SCB225-3/4F-2N-T12	2 1/4	12	1	2	2 3/4	3	5 1/2	3/4	5/8
SCB225-3/4F-3N-T12	2 1/4	12	2	3	2 3/4	3	6 1/4	3/4	5/8
SCB225-3/4F-4N-T12	2 1/4	12	2	4	2 3/4	3	6 1/4	3/4	5/8
SCB225-3/4F-4N4-T12	2 1/4	12	2	4	2 3/4	4	7 1/4	3/4	1 1/8
SCB225-3/4F-6N4-T12	2 1/4	12	3	6	2 3/4	4	7 5/8	3/4	1 1/8
SCB225-1F-2N-T12	2 1/4	12	1	2	2 3/4	3	5 1/2	1	5/8
SCB225-1F-3N-T12	2 1/4	12	2	3	2 3/4	3	6 1/4	1	5/8
SCB225-1F-4N-T12	2 1/4	12	2	4	2 3/4	3	6 1/4	1	5/8
SCB225-1F-4N4-T12	2 1/4	12	2	4	2 3/4	4	7 1/4	1	1 1/8
SCB250-1/2F-2N-T12	2 1/2	12	1	2	3	3	6 1/4	1/2	5/8
SCB250-1/2F-3N-T12	2 1/2	12	2	3	3	3	6 1/4	1/2	5/8
SCB250-1/2F-4N-T12	2 1/2	12	2	4	3	3	6 1/4	1/2	5/8
SCB250-1/2F-4N4-T12	2 1/2	12	2	4	3	4	7 1/4	1/2	1 1/8
SCB250-5/8F-2N-T12	2 1/2	12	1	2	3	3	6 1/4	5/8	5/8
SCB250-5/8F-3N-T12	2 1/2	12	2	3	3	3	6 1/4	5/8	5/8
SCB250-5/8F-4N-T12	2 1/2	12	2	4	3	3	6 1/4	5/8	5/8
SCB250-5/8F-4N4-T12	2 1/2	12	2	4	3	4	7 1/4	5/8	1 1/8
SCB250-3/4F-2N-T12	2 1/2	12	1	2	3	3	6 1/4	3/4	5/8
SCB250-3/4F-3N-T12	2 1/2	12	2	3	3	3	6 1/4	3/4	5/8
SCB250-3/4F-4N-T12	2 1/2	12	2	4	3	3	6 1/4	3/4	5/8
SCB250-3/4F-4N4-T12	2 1/2	12	2	4	3	4	7 5/8	3/4	1 1/8
SCB250-1F-2N-T12	2 1/2	12	1	2	3	3	6 1/4	1	5/8
SCB250-1F-3N-T12	2 1/2	12	2	3	3	3	6 1/4	1	5/8
SCB250-1F-4N-T12	2 1/2	12	2	4	3	3	6 1/4	1	5/8
SCB250-1F-4N4-T12	2 1/2	12	2	4	3	4	7 1/4	1	1 1/8

© 2011, AFL, all rights reserved. PP-3-00447, Revision 4, 3.24.2023
Specifications are subject to change without notice.

DOSSERT®

TYPE SCB-F

Stud Connector to Flat Bar Type

Ordering Information

CATALOG NUMBER	STUD DIAMETER	THREADS PER INCH	FIG. NO.	DIMENSIONS IN INCHES					
				A	B	C	L	T	X
SCB300-1/2F-2N-T12	3	12	1	2	3	3	6 1/2	1/2	5/8
SCB300-1/2F-3N-T12	3	12	2	3	3	3	6 1/2	1/2	5/8
SCB300-1/2F-4N-T12	3	12	2	4	3	3	6 1/2	1/2	5/8
SCB300-1/2F-4N4-T12	3	12	2	4	3	4	7 1/2	1/2	1 1/8
SCB300-1/2F-6N4-T12	3	12	3	6	3	4	7 7/8	1/2	1 1/8
SCB300-5/8F-2N-T12	3	12	1	2	3	3	6 1/2	5/8	5/8
SCB300-5/8F-3N-T12	3	12	2	3	3	3	6 1/2	5/8	5/8
SCB300-5/8F-4N-T12	3	12	2	4	3	3	6 1/2	5/8	5/8
SCB300-5/8F-4N4-T12	3	12	2	4	3	4	7 1/2	5/8	1 1/8
SCB300-3/4F-2N-T12	3	12	1	2	3 1/4	3	6 1/2	3/4	5/8
SCB300-3/4F-3N-T12	3	12	2	3	3 1/4	3	6 1/2	3/4	5/8
SCB300-3/4F-4N-T12	3	12	2	4	3 1/4	3	7 5/8	3/4	5/8
SCB300-3/4F-4N4-T12	3	12	2	4	3 1/4	4	8 1/8	3/4	1 1/8
SCB300-1F-2N-T12	3	12	1	2	3 1/4	3	6 1/2	1	5/8
SCB300-1F-3N-T12	3	12	2	3	3 1/4	3	6 1/2	1	5/8
SCB300-1F-4N4-T12	3	12	2	4	3 1/4	4	7 1/2	1	5/8
SCB300-1F-6N4-T12	3	12	3	6	3	4	7 7/8	1	1 1/8
SCB350-1F-6N4-T12	3.5	12	3	6	3 1/2	4 1/4	8 3/8	1	1 1/8
SCB354-1F-6N4-T0	90 MM	0	3	6	3 1/2	4 1/4	8 3/8	1	1 1/8
SCB400-1 1/4F-6N4-T12	4	12	3	6	4	4	9	1 1/4	1 1/8
SCB400-1F-4N4-T12	4	12	2	4	4	4	9	1	1 1/8
SCB400-1F-4N4-T10	4	10	2	4	4	4	9	1	1 1/8
SCB500-3/4F-6N4-T10	5	10	3	6	4	4	9	3/4	1 1/8
SCB500-3/4F-6N4-T12	5	10	3	6	4	4	9	3/4	1 1/8

© 2011, AFL, all rights reserved. PP-3-00447, Revision 4, 3.24.2023
Specifications are subject to change without notice.

DOSSERT®

TYPE T2CVH, T2CVHA-45, T2CVHA-90

Terminal Connector

A heavy duty variable clamp type terminal for connecting a cable to a flat bar bus. Each size terminal accommodates a wide range of cable sizes. Designed to carry the full rated load of the maximum conductor without overheating. Contact pads other than those listed below can be promptly furnished to any specified size or drilling. The variable type terminal exhibits its advantage in that one connector will accommodate a number of cable sizes. This minimizes greatly the problem of stocking various sizes of connectors and the errors which occur in specifying connectors for specific cable sizes.

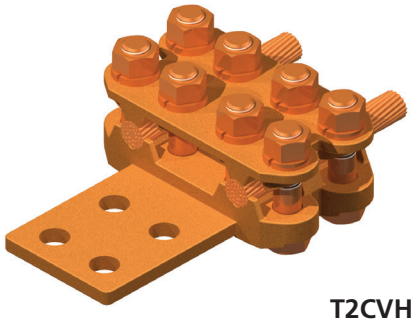

T2CVH

Material

Copper Alloy

Hardware

Everdur bolts, nuts and lock washers.

Notes

- For tin plating add suffix (SN) to catalog number. Ex: T2CVH50-2N-SN
- For undrilled pads, add the suffix (U) to the part numbers. Ex: T2CVH50-2U
- For a 45° angle add -45, and for a 90° angle add -90.
  For an angled pad add an 'A' after TCVH.
  Ex: For 45° 2 hole NEMA pad to two 500MCM cables order: T2CVHA50-2N-45

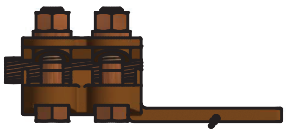

T2CVH



T2CVHA-90

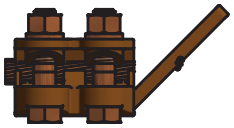

TCVHA-45

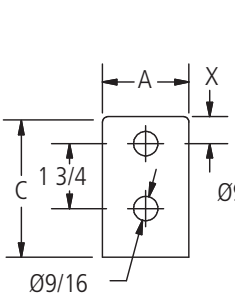

FIG. 1

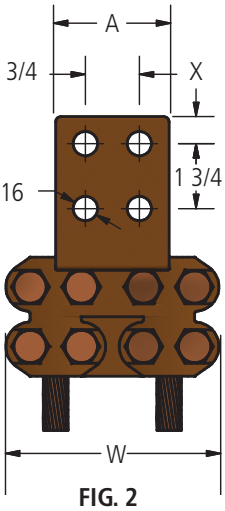

FIG. 2

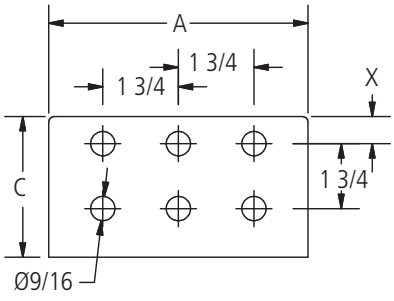

FIG. 3

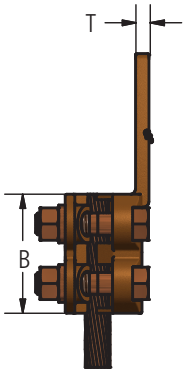

© 2011, AFL, all rights reserved. PP-3-00469, Revision 4, 4.18.18
Specifications are subject to change without notice.

DOSSERT®

TYPE T2CVH, T2CVHA-45, T2CVHA-90

Terminal Connector

Ordering Information

CATALOG NUMBER			CABLE RANGE		FIG. NO.	DIMENSIONS IN INCHES						BOLT SIZE
STRAIGHT	45 DEG.	90 DEG.	MIN	MAX		A	B	C	T	W	X	
T2CVH25-2N	T2CVHA25-2N-45	T2CVHA25-2N-90	# 4 SOL	250 MCM	1	2	2 3/4	3	5/16	3 1/2	5/8	1/2
T2CVH25-4N	T2CVHA25-4N-45	T2CVHA25-4N-90	# 4 SOL	250 MCM	2	3	2 3/4	3	5/16	3 1/2	5/8	1/2
T2CVH50-2N	T2CVHA50-2N-45	T2CVHA50-2N-90	1/0 SOL	500 MCM	1	2	3	3	3/8	4	5/8	1/2
T2CVH50-4N	T2CVHA50-4N-45	T2CVHA50-4N-90	1/0 SOL	500 MCM	2	3	3	3	3/8	4	5/8	1/2
T2CVH50-4N4	T2CVHA50-4N4-45	T2CVHA50-4N4-90	1/0 SOL	500 MCM	2	4	3	4	3/8	4	1 1/8	1/2
T2CVH80-2N	T2CVHA80-2N-45	T2CVHA80-2N-90	2/0 SOL	800 MCM	1	2	2 7/8	3	1/2	4 1/2	5/8	1/2
T2CVH80-4N	T2CVHA80-4N-45	T2CVHA80-4N-90	2/0 SOL	800 MCM	2	3	2 7/8	3	1/2	4 1/2	5/8	1/2
T2CVH80-4N4	T2CVHA80-4N4-45	T2CVHA80-4N4-90	2/0 SOL	800 MCM	2	4	2 7/8	4	1/2	4 1/2	1 1/8	1/2
T2CVH100-2N	T2CVHA100-2N-45	T2CVHA100-2N-90	4/0 SOL	1000 MCM	1	2 1/2	3	3	1/2	4 3/4	5/8	1/2
T2CVH100-4N	T2CVHA100-4N-45	T2CVHA100-4N-90	4/0 SOL	1000 MCM	2	3	3	3	1/2	4 3/4	5/8	1/2
T2CVH100-4N4	T2CVHA100-4N4-45	T2CVHA100-4N4-90	4/0 SOL	1000 MCM	2	4	3	4	1/2	4 3/4	1 1/8	1/2
T2CVH100-4N4-T5/8	T2CVH100-4N4-T5/8-45	T2CVH100-4N4-T5/8-90	4/0 SOL	1000 MCM	2	4	3	4	5/8	4 3/4	1 1/8	1/2
T2CVH100-4N4-T3/4	T2CVH100-4N4-T3/4-45	T2CVH100-4N4-T3/4-90	4/0 SOL	1000 MCM	2	4	3	4	3/4	4 3/4	1 1/8	1/2
T2CVH100-6N4	T2CVH100-6N4-45	T2CVH100-6N4-90	4/0 SOL	1000 MCM	3	6	3	4	1/2	4 3/4	1 1/8	1/2
T2CVH200-4N	T2CVHA200-4N-45	T2CVHA200-4N-90	500 MCM	2000 MCM	2	3	3 5/8	3	11/16	5 5/8	5/8	1/2
T2CVH200-4N4	T2CVHA200-4N4-45	T2CVHA200-4N4-90	500 MCM	2000 MCM	2	4	3 5/8	4	11/16	5 5/8	1 1/8	1/2
T2CVH200-5N4	T2CVH200-5N4-45	T2CVH200-5N4-90	500 MCM	2000 MCM	3	5	3 5/8	4	11/16	5 5/8	1 1/8	1/2
T2CVH200-6N4	T2CVHA200-6N4-45	T2CVHA200-6N4-90	500 MCM	2000 MCM	3	6	3 5/8	4	11/16	5 5/8	1 1/8	1/2
T2CVH300-4N4	T2CVH300-4N4-45	T2CVH300-4N4-90	1000 MCM	3000 MCM	2	4	3 7/8	4	1	7 3/16	1 1/8	5/8
T2CVH300-6N4	T2CVH300-6N4-45	T2CVH300-6N4-90	1000 MCM	3000 MCM	3	6	3 7/8	4	1	7 3/16	1 1/8	5/8

© 2011, AFL, all rights reserved. PP-3-00469, Revision 4, 4.18.18
Specifications are subject to change without notice.

DOSSERT®

TYPE TCVH, TCVHA-15, TCVHA-30, TCVHA-45, TCVHA-90

Heavy Duty Copper Terminal For Cable to a Flat Pad

A heavy duty variable clamp type terminal for connecting a cable to a flat bar bus. Each size terminal accommodates a wide range of cable sizes. Designed to carry the full rated load of the maximum conductor without overheating. Contact pads other than those listed below can be promptly furnished to any specified size or drilling.

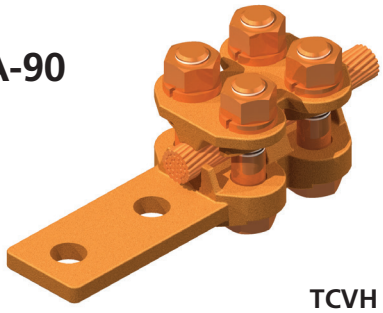

TCVH

Material

Copper Alloy

Hardware

Everdur bolts, nuts and lock washers.

Notes

- For Electro Tin plate, add "-SN" to catalog number. Ex: TCVH50-2N-SN
- For Angled Pad, add "A" to prefix and angle to catalog number. EX: TCVHA50-45
- For Undrilled Pad, add "-U" to pad size in catalog number. Ex: TCVH50-4N4U

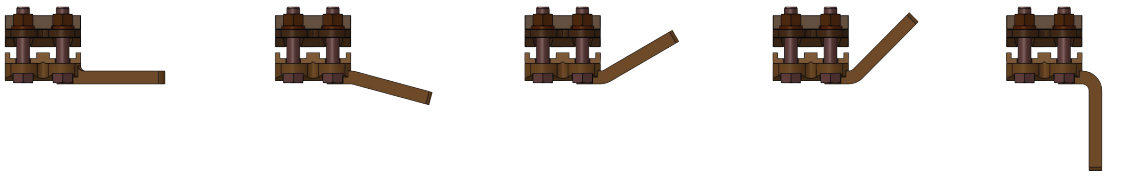

TCVH TCVHA-15 TCVHA-30 TCVHA-45 TCVHA-90

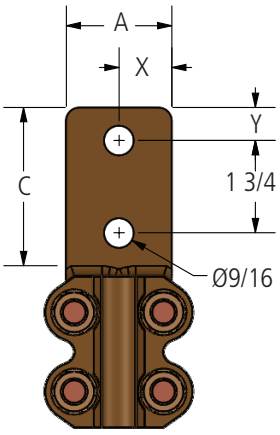

FIG. 1

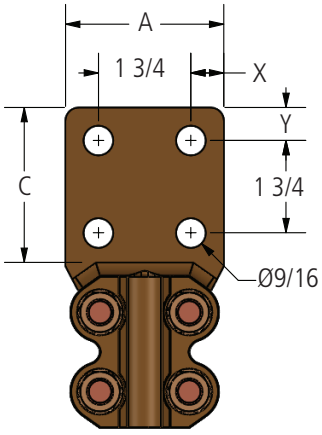

FIG. 2

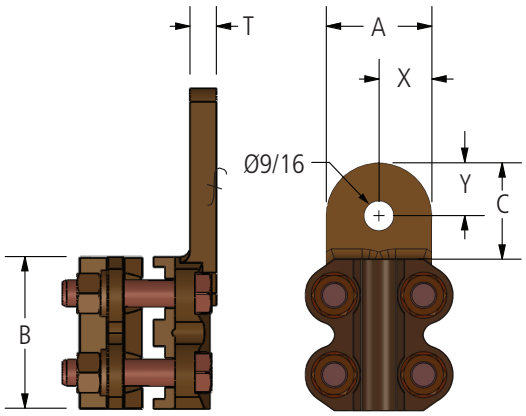

FIG. 3

© 2011, AFL, all rights reserved. PP-3-00472, Revision 2, 9.1.17
Specifications are subject to change without notice.

DOSSERT®

TYPE TCVH, TCVHA-15, TCVHA-30, TCVHA-45, TCVHA-90

Heavy Duty Copper Terminal For Cable to a Flat Pad

Ordering Information

CATALOG NUMBER					CABLE RANGE		FIG. NO.	DIMENSIONS IN INCHES						BOLT SIZE
STRAIGHT	15 DEG.	30 DEG.	45 DEG.	90 DEG.	MIN	MAX		A	B	C	T	X	Y	
TCVH25-1	TCVHA25-1-15	TCVHA25-1-30	TCVHA25-1-45	TCVHA25-1-90	#4 SOL.	250 MCM	3	1.50	2.75	1.38	0.31	0.75	0.75	1/2
TCVH25-2N	TCVHA25-2N-15	TCVHA25-2N-30	TCVHA25-2N-45	TCVHA25-2N-90	#4 SOL.	250 MCM	1	1.50	2.75	3.00	0.31	0.75	0.63	1/2
TCVH25-4N	TCVHA25-4N-15	TCVHA25-4N-30	TCVHA25-4N-45	TCVHA25-4N-90	#4 SOL.	250 MCM	2	3.00	2.75	3.00	0.31	0.63	0.63	1/2
TCVH25-4N4	TCVHA25-4N4-15	TCVHA25-4N4-30	TCVHA25-4N4-45	TCVHA25-4N4-90	#4 SOL.	250 MCM	2	4.00	2.75	4.00	0.31	1.13	1.13	1/2
TCVH50-1	TCVHA50-1-15	TCVHA50-1-30	TCVHA50-1-45	TCVHA50-1-90	1/0 SOL.	500 MCM	3	2.00	2.63	1.50	0.38	1.00	0.88	1/2
TCVH50-2N	TCVHA50-2N-15	TCVHA50-2N-30	TCVHA50-2N-45	TCVHA50-2N-90	1/0 SOL.	500 MCM	1	2.00	2.63	3.00	0.38	1.00	0.63	1/2
TCVH50-2N3	TCVHA50-2N3-15	TCVHA50-2N3-30	TCVHA50-2N3-45	TCVHA50-2N3-90	1/0 SOL.	500 MCM	1	2.00	2.63	3.00	0.38	1.00	0.63	1/2
TCVH50-4N	TCVHA50-4N-15	TCVHA50-4N-30	TCVHA50-4N-45	TCVHA50-4N-90	1/0 SOL.	500 MCM	2	3.00	2.63	3.00	0.38	0.63	0.63	1/2
TCVH50-4N4	TCVHA50-4N4-15	TCVHA50-4N4-30	TCVHA50-4N4-45	TCVHA50-4N4-90	1/0 SOL.	500 MCM	2	4.00	2.63	4.00	0.38	1.13	1.13	1/2
TCVH80-2N	TCVHA80-2N-15	TCVHA80-2N-30	TCVHA80-2N-45	TCVHA80-2N-90	2/0 SOL.	800 MCM	1	2.00	2.88	3.00	0.50	1.00	0.63	1/2
TCVH80-2N3	TCVHA80-2N3-15	TCVHA80-2N3-30	TCVHA80-2N3-45	TCVHA80-2N3-90	2/0 SOL.	800 MCM	1	2.00	2.88	3.00	0.50	1.00	0.63	1/2
TCVH80-4N	TCVHA80-4N-15	TCVHA80-4N-30	TCVHA80-4N-45	TCVHA80-4N-90	2/0 SOL.	800 MCM	2	3.00	2.88	3.00	0.50	0.63	0.63	1/2
TCVH80-4N4	TCVHA80-4N4-15	TCVHA80-4N4-30	TCVHA80-4N4-45	TCVHA80-4N4-90	2/0 SOL.	800 MCM	2	4.00	2.88	4.00	0.50	1.13	1.13	1/2
TCVH100-2N	TCVHA100-2N-15	TCVHA100-2N-30	TCVHA100-2N-45	TCVHA100-2N-90	4/0 SOL.	1000 MCM	1	2.00	2.88	3.00	0.50	1.00	0.63	1/2
TCVH100-4N	TCVHA100-4N-15	TCVHA100-4N-30	TCVHA100-4N-45	TCVHA100-4N-90	4/0 SOL.	1000 MCM	2	3.00	2.88	3.00	0.50	0.63	0.63	1/2
TCVH100-4N4	TCVHA100-4N4-15	TCVHA100-4N4-30	TCVHA100-4N4-45	TCVHA100-4N4-90	4/0 SOL.	1000 MCM	2	4.00	2.88	4.00	0.50	1.13	1.13	1/2
TCVH200-4N	TCVHA200-4N-15	TCVHA200-4N-30	TCVHA200-4N-45	TCVHA200-4N-90	500 MCM	2000 MCM	2	3.00	3.38	3.00	0.69	0.63	0.63	1/2
TCVH200-4N4	TCVHA200-4N4-15	TCVHA200-4N4-30	TCVHA200-4N4-45	TCVHA200-4N4-90	500 MCM	2000 MCM	2	4.00	3.38	4.00	0.69	1.13	1.13	1/2
TCVH250-4N	TCVHA250-4N-15	TCVHA250-4N-30	TCVHA250-4N-45	TCVHA250-4N-90	2000 MCM	2500 MCM	2	3.00	4.50	3.00	0.81	0.63	0.63	5/8

© 2011, AFL, all rights reserved. PP-3-00472, Revision 2, 9.1.17
Specifications are subject to change without notice.

DOSSERT®

TYPE TCX

Bar to Variable Cable or Pipe

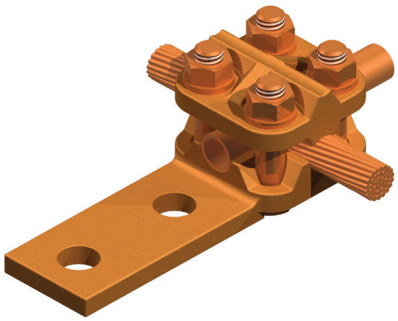

TCX can be used as a tap or a terminal. A variable clamp type terminal or tap for connecting a cable or pipe to a flat bar bus. Each size accommodates a wide range of cable sizes.

Material

Copper Alloy

Hardware

Everdur-bolts, nuts, and lockwashers.

Note

For tin plating add "-SN" to the end of the catalog number.

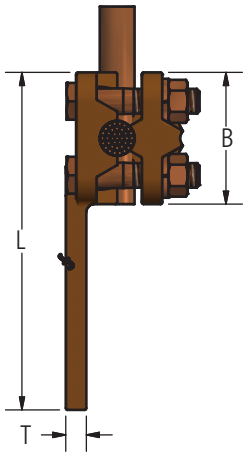

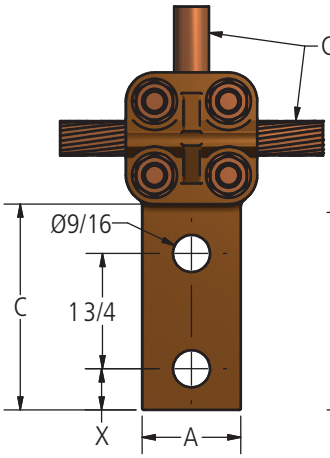

FIG. 1

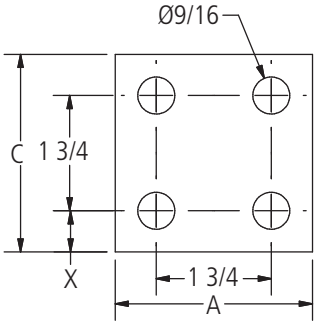

FIG. 2

Ordering Information

CATALOG NUMBER	CABLE RANGE		SPS RANGE		FIG NO.	DIMENSIONS IN INCHES						BOLT SIZE
	SMALL GROOVE	LARGE GROOVE	SMALL GROOVE	LARGE GROOVE		A	B	C	L	T	X	
TCX21-2N	6SOL-1STR	1STR-4/0STR	-	-	1	1 1/2	2	3	5 1/8	5/16	5/8	3/8
TCX21-4N	6SOL-1STR	1STR-4/0STR	-	-	2	3	2	3	5 1/8	5/16	5/8	3/8
TCX60-2N	4SOL-4/0STR	250-600	1/4	1/2	1	1 1/2	2 5/16	3	5 1/2	3/8	5/8	3/8
TCX60-4N	4SOL-4/0STR	250-600	1/4	1/2	2	3	2 5/16	3	5 1/2	3/8	5/8	3/8
TCX80-2N	2SOL-250	300-800	1/4	3/4	1	2	2 7/16	3	5 11/16	1/2	5/8	3/8
TCX80-4N	2SOL-250	300-800	1/4	3/4	2	3	2 7/16	3	5 11/16	1/2	5/8	3/8
TCX150-2N	4/0SOL-850	900-1500	1/4	1	1	2	3 1/4	3	6 1/2	9/16	5/8	1/2
TCX150-4N	4/0SOL-850	900-1500	1/4	1	2	3	3 1/4	3	6 1/2	9/16	5/8	1/2
TCX150-4N4	4/0SOL-850	900-1500	1/4	1	2	4	3 1/4	4	7 1/2	9/16	1 1/8	1/2
TCX200-2N	500-1300	1500-2000	3/4	1 1/2	2	2	3 1/2	3	6 3/4	11/16	5/8	1/2
TCX200-4N	500-1300	1500-2000	3/4	1 1/2	2	3	3 1/2	3	6 3/4	11/16	5/8	1/2

© 2011, AFL, all rights reserved. PP-3-00474, Revision 0, 3.10.11
Specifications are subject to change without notice.

DOSSERT®

TYPE TP, TPA-30, TPA-45, TPA-60, TPA-90

Copper Clamp Terminal for Tubular Bus to Flat

A bolted clamp type terminal for connecting standard pipe size tubular buses to flat surfaces.

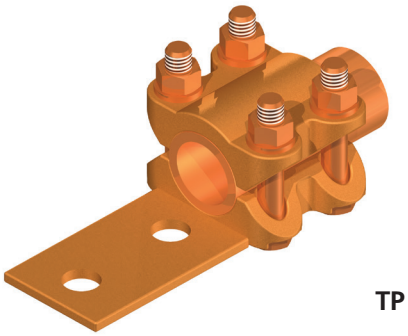

TP

Material

Copper Alloy

Hardware

Everdur-nuts, bolts and lock washers.

Notes

- Contact pads can be furnished to any specification of size undrilled or drilled to specified hole sizes and center to center dimensions.
- For Electro Tin Plate, add "-SN" to catalog number. EX: TP300-4N-SN
- For Angled Pad, add "A" to prefix and angle to catalog number. EX: TPA350-4N-60
- For Undrilled Pad, add "U" to pad size in catalog number. EX: TP350-4U

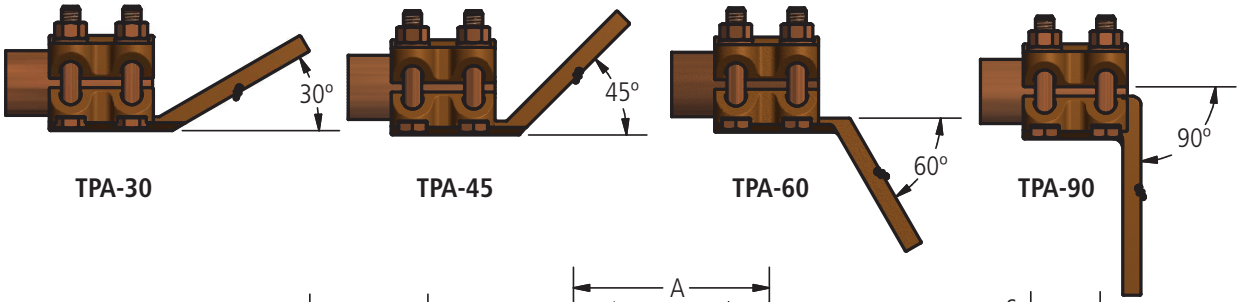

TPA-30 TPA-45 TPA-60 TPA-90

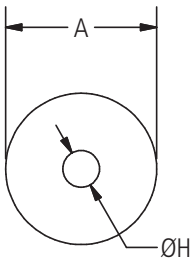

FIG. 1

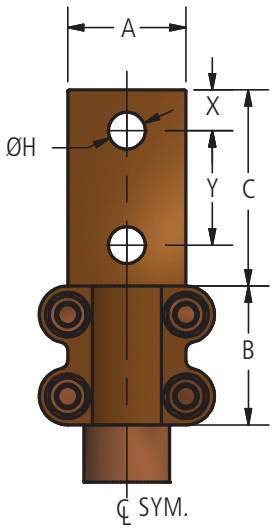

FIG. 2

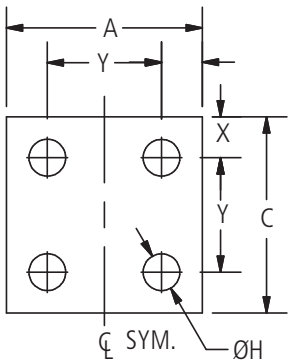

FIG. 3

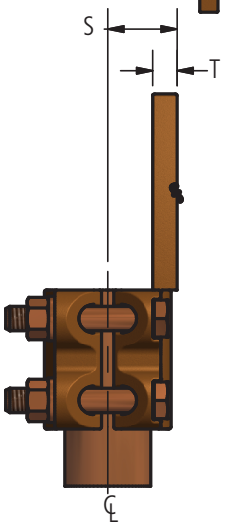

TP

© 2011, AFL, all rights reserved. PP-3-00138, Revision 3, 5.25.2023
Specifications are subject to change without notice.

DOSSERT®

TYPE TP, TPA-30, TPA-45, TPA-60, TPA-90

Copper Clamp Terminal for Tubular Bus to Flat

Ordering Information

CATALOG NUMBER	SPS	FIG. NO.	DIMENSIONS IN INCHES								
			A	C	B	H	T	X	Y	S	BOLT SIZE
TP25-1	1/4	1	1 1/4	—	2	7/16	1/4	—	—	—	3/8
TP25-2	1/4	2	1 1/4	1 7/8	2	7/16	1/4	7/16	1		3/8
TP25-2N	1/4	2	1 1/2	3	2	9/16	1/4	5/8	1 3/4	11/16	3/8
TP38-1	3/8	1	1 1/4	—	2	7/16	1/4	—	—	—	3/8
TP38-2	3/8	2	1 1/4	2 1/8	2 1/8	7/16	1/4	7/16	1	3/4	3/8
TP38-2N	3/8	2	1 1/2	3 1/4	2 1/8	9/16	1/4	5/8	1 3/4	3/4	3/8
TP50-1	1/2	1	1 1/2	—	2	9/16	5/16	—	—	—	3/8
TP50-2	1/2	2	1 1/2	2 1/4	2	7/16	5/16	1/2	1 1/4	—	3/8
TP50-2N	1/2	2	1 1/2	3	2	9/16	5/16	5/8	1 3/4	7/8	3/8
TP75-1	3/4	1	1 3/4	—	2	9/16	3/8	—	—	15/16	3/8
TP75-2	3/4	2	1 1/2	2 1/4	2	9/16	3/8	1/2	1 1/4	—	3/8
TP75-2N	3/4	2	2	3	2	7/16	3/8	5/8	1 3/4	1	3/8
TP100-2	1	2	1 3/4	2 1/4	2 1/8	9/16	3/8	1/2	1 1/4	—	3/8
TP100-2N	1	2	1 3/4	3	2 1/8	7/16	3/8	5/8	1 3/4	1 3/8	3/8
TP100-4	1	3	2 1/4	2 1/4	2 1/8	9/16	3/8	1/2	1 1/4	1 1/8	3/8
TP100-4N	1	3	3	3	2 1/8	7/16	3/8	5/8	1 3/4	1 3/8	3/8
TP125-2	1 1/4	2	2 1/4	3	2 1/2	9/16	7/16	3/4	1 1/2	—	1/2
TP125-2N	1 1/4	2	2 1/4	3	2 1/2	9/16	7/16	5/8	1 3/4	1 1/2	1/2
TP125-4	1 1/4	3	3	3	2 1/2	9/16	7/16	3/4	1 1/2	1 11/32	1/2
TP125-4N	1 1/4	3	3	3	2 1/2	9/16	7/16	5/8	1 3/4	1 1/2	1/2
TP150-2	1 1/2	2	2 1/2	3 1/4	2 5/8	9/16	1/2	3/4	1 3/4	—	1/2
TP150-2N	1 1/2	2	2 1/2	3	2 5/8	9/16	1/2	5/8	1 3/4	1 1/2	1/2
TP150-4	1 1/2	3	3	3	2 5/8	9/16	1/2	3/4	1 1/2	1 9/16	1/2
TP150-4N	1 1/2	3	3	3	2 5/8	9/16	1/2	5/8	1 3/4	1 1/2	1/2
TP200-2	2	2	2 3/4	3 1/4	2 3/4	9/16	1/2	3/4	1 3/4	—	1/2
TP200-2N	2	2	2 3/4	3	2 3/4	9/16	1/2	5/8	1 3/4	1 3/4	1/2
TP200-4	2	3	3 1/4	3 1/4	2 3/4	9/16	1/2	3/4	1 3/4	1 13/16	1/2
TP200-4N	2	3	3	3	2 3/4	9/16	1/2	5/8	1 3/4	1 3/4	1/2
TP200R-4N	2 O.D.	3	3	3	2 3/4	9/16	1/2	5/8	1 3/4	1 3/4	1/2
TP250-2	2 1/2	2	3	3 3/4	2 3/4	9/16	11/16	1	1 3/4	—	1/2
TP250-2N	2 1/2	2	3	3	2 3/4	9/16	11/16	5/8	1 3/4	2 1/8	1/2
TP250-4	2 1/2	3	3 3/4	3 3/4	2 3/4	9/16	11/16	7/8	2	2 3/16	1/2
TP250-4N	2 1/2	3	3	3	2 3/4	9/16	11/16	5/8	1 3/4	2 1/8	1/2
TP250-4N4	2 1/2	3	4	4	2 3/4	9/16	11/16	1 1/8	1 3/4	—	1/2
TP300-4	3	3	4 1/2	4 1/2	3 1/4	9/16	11/16	7/8	2 3/4	—	5/8
TP300-4N	3	3	4	4	3 1/4	9/16	11/16	5/8	1 3/4	2 1/2	5/8
TP300-4N4	3	3	4	4	3 1/4	9/16	11/16	1 1/8	1 3/4	2 11/16	5/8
TP300-5N4S-7/8T	3	3	5	4	3 1/4	9/16	7/8	1 1/8	1 3/4	—	5/8
TP350-4	3 1/2	3	4 3/4	4 3/4	3 1/4	9/16	13/16	7/8	3	2 7/8	5/8
TP350 4N	3 1/2	3	3	3	3 1/4	9/16	13/16	5/8	1 3/4	2 5/8	5/8
TP350-4N4	3 1/2	3	4	4	3 1/4	9/16	13/16	1 1/8	1 3/4	2 5/8	5/8
TP400-4	4	3	5 1/2	5 1/2	3 3/8	11/16	13/16	1 1/8	3 1/4	—	5/8
TP400-4N	4	3	3	3	3 3/8	9/16	13/16	5/8	1 3/4	3 1/8	5/8
TP600-4N4	6	3	4	4	5 3/4	9/16	1 1/4	1 1/8	1 3/4	—	5/8

© 2011, AFL, all rights reserved. PP-3-00138, Revision 3, 5.25.2023
Specifications are subject to change without notice.

DOSSERT®

TYPE TPC
Terminal Connector

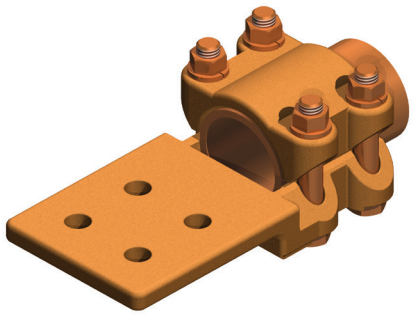

Material
Copper Alloy

Hardware
Everdur-bolts, nuts, and lockwashers.

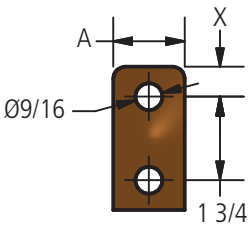

FIG. 1

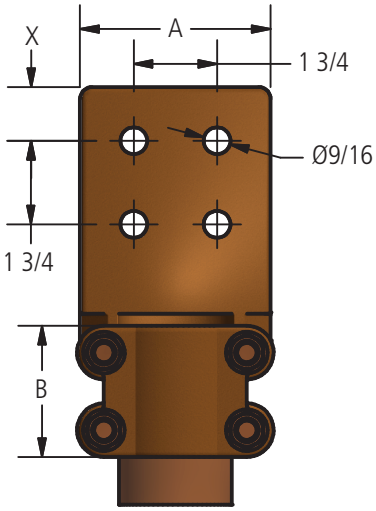

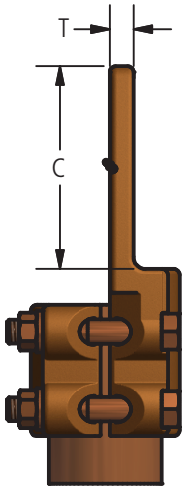

FIG. 2

Ordering Information

CATALOG NUMBER	SPS	FIG. NO.	DIMENSIONS IN INCHES					BOLT SIZE
			A	B	C	T	X	
TPC25-2N	1/4	1	1 1/2	2	3	1/4	5/8	3/8
TPC38-2N	3/8	1	1 1/2	2	3	1/4	5/8	3/8
TPC50-2N	1/2	1	1 1/2	2	3	5/16	5/8	3/8
TPC50-4N	1/2	2	3	2	3	5/16	5/8	3/8
TPC75-2N	3/4	1	1 1/2	2	3	3/8	5/8	3/8
TPC75-4N	3/4	2	3	2	3	3/8	5/8	3/8
TPC100-2N	1	1	1 3/4	2 1/8	3	3/8	5/8	3/8
TPC100-4N	1	2	3	2 1/8	3	3/8	5/8	3/8
TPC100-4N4	1	2	4	2 1/8	4	3/8	1 1/8	3/8
TPC125-2N	1 1/4	1	2	2 1/2	3	7/16	5/8	1/2
TPC125-4N	1 1/4	2	3	2 1/2	3	7/16	5/8	1/2
TPC125-4N4	1 1/4	2	4	2 1/2	4	7/16	1 1/8	1/2
TPC150-2N	1 1/2	1	2 1/2	2 5/8	3	1/2	5/8	1/2
TPC150-4N	1 1/2	2	3	2 5/8	3	1/2	5/8	1/2
TPC150-4N4	1 1/2	2	4	2 5/8	4	1/2	1 1/8	1/2
TPC200-2N	2	1	2 3/4	2 3/4	3	1/2	5/8	1/2
TPC200-4N	2	2	3	2 3/4	3	1/2	5/8	1/2
TPC200-4N4	2	2	4	2 3/4	4	1/2	1 1/8	1/2
TPC250-2N	2 1/2	1	3	2 3/4	3	11/16	5/8	1/2
TPC250-4N	2 1/2	2	3	2 3/4	3	11/16	5/8	1/2
TPC250-4N4	2 1/2	2	4	2 3/4	4	11/16	1 1/8	1/2
TPC300-4N	3	2	3	3 1/4	3	11/16	5/8	5/8
TPC300-4N4	3	2	4	3 1/4	4	11/16	1 1/8	5/8
TPC350-4N	3 1/2	2	3	3 1/4	3	13/16	5/8	5/8
TPC350-4N4	3 1/2	2	4	3 1/4	4	13/16	1 1/8	5/8
TPC400-4N	4	2	3	3 3/8	3	13/16	5/8	5/8
TPC400-4N4	4	2	4	3 3/8	4	13/16	1 1/8	5/8
TPC600-4N4	6	2	4	5 3/4	4	1 1/4	1 1/8	5/8

© 2011, AFL, all rights reserved. PP-3-00162, Revision 2, 3.9.2023
Specifications are subject to change without notice.

DOSSERT®

TYPE UL-90H

Copper Horizontal Terminal For Cable To Bus

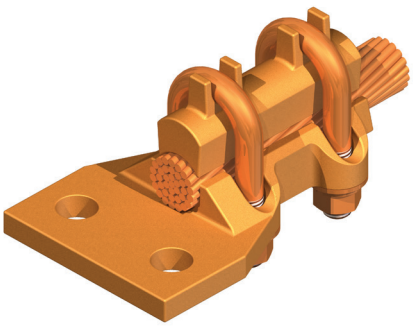

A horizontal angle terminal for connecting a cable at 90 degree to the bus.

Material

Copper Alloy

Hardware

Everdur U-bolts, nuts and lockwashers.

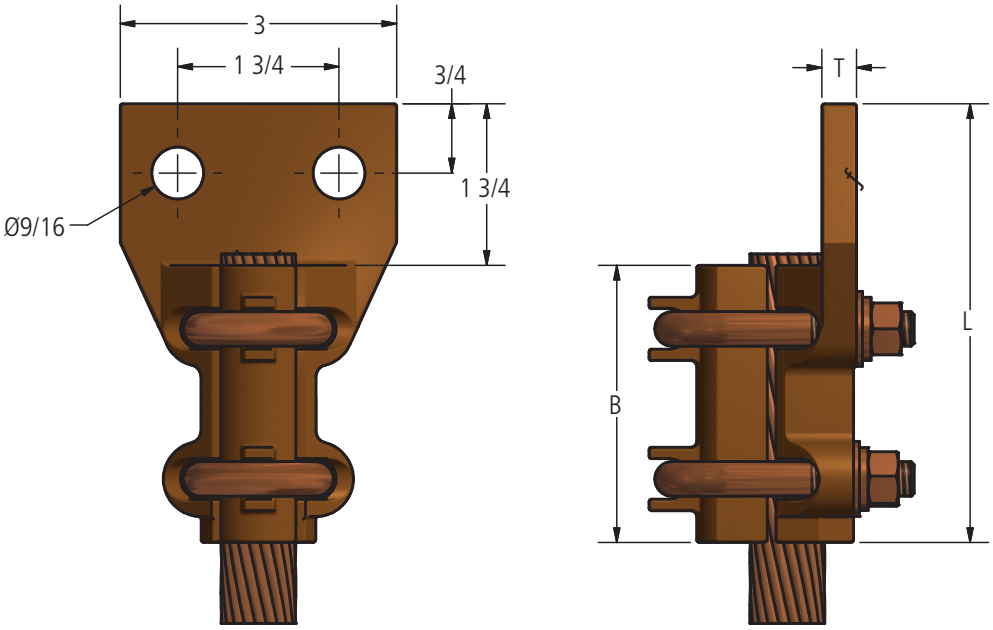

Ordering Information

CATALOG NUMBER	CABLE SIZE		DIMENSIONS IN INCHES			U-BOLT SIZE
	MIN	MAX	B	L	T	
UL13-2N-90H	6 Str	2/0 Str	2 1/2	4 1/4	5/16	5/16
UL21-2N-90H	1 Str	4/0 Str	2 5/8	4 3/8	5/16	3/8
UL30-2N-90H	1/0 Str	300 MCM	2 3/4	4 1/2	3/8	3/8
UL50-2N-90H	300 MCM	500 MCM	3	4 3/4	3/8	3/8
UL80-2N-90H	500 MCM	800 MCM	3 1/4	5	1/2	1/2
UL100-2N-90H	750 MCM	1000 MCM	3 1/2	5 1/4	1/2	1/2
UL150-2N-90H	1000 MCM	1500 MCM	4	5 3/4	9/16	1/2
UL200-2N-90H	1500 MCM	2000 MCM	4 1/2	6 1/4	9/16	1/2

© 2011, AFL, all rights reserved. PP-3-00498, Revision 0, 3.10.11
Specifications are subject to change without notice.

DOSSERT®

TYPE UL-90V

Copper Vertical Mouting Terminal

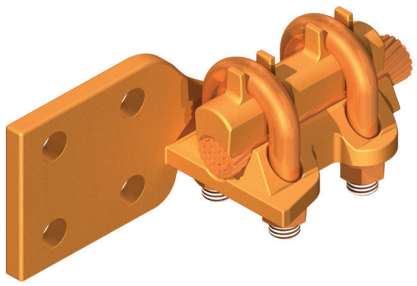

A vertical side mounting type terminal lug for connecting cables to flat bar busses. The side clamping feature provides clearance to enable terminal to be mounted well within the bus surface without interference of the U-bolts.

Material

Copper Alloy

Hardware

Everdur U-bolts, nuts and lockwashers.

Note

Contact pads can be furnished to any specification of size undrilled or drilled to specified hole sizes and center to center dimensions.

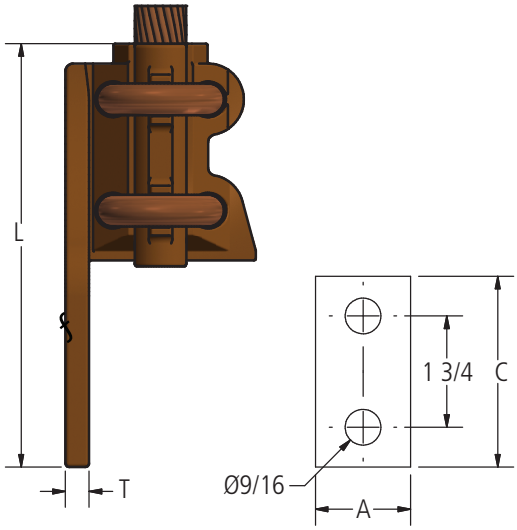

FIG. 1

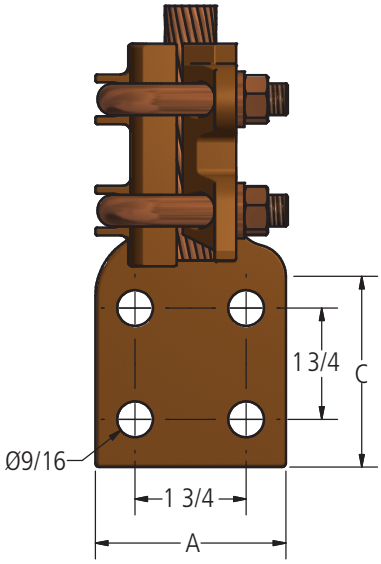

FIG. 2

Ordering Information

CATALOG NUMBER	CABLE RANGE		FIG. NO.	DIMENSIONS IN INCHES				BOLT SIZE
	MIN	MAX		A	C	L	T	
UL13-2N-90V	6 Str	2/0 Str	1	1 1/2	3 1/4	5 3/4	5/16	5/16
UL13-4N-90V	6 Str	2/0 Str	2	3	3 1/4	5 3/4	5/16	5/16
UL21-2N-90V	1 Str	4/0 Str	1	1 1/2	3 1/4	5 7/8	5/16	3/8
UL21-4N-90V	1 Str	4/0 Str	2	3	3 1/4	5 7/8	5/16	3/8
UL30-2N-90V	1/0 Str	300 MCM	1	1 1/2	3 1/4	6	3/8	3/8
UL30-4N-90V	1/0 Str	300 MCM	2	3	3 1/4	6	3/8	3/8
UL50-2N-90V	300 MCM	500 MCM	1	1 1/2	3 1/4	6 1/4	3/8	3/8
UL50-4N-90V	300 MCM	500 MCM	2	3	3 1/4	6 1/4	3/8	3/8
UL50-4N4-90V	300 MCM	500 MCM	2	4	4 1/4	7 1/4	3/8	3/8
UL80-2N-90V	500 MCM	800 MCM	1	1 1/2	3 1/4	6 1/2	1/2	3/8
UL80-4N-90V	500 MCM	800 MCM	2	3	3 1/4	6 1/2	1/2	3/8
UL80-4N4-90V	500 MCM	800 MCM	2	4	4 1/4	7 1/2	1/2	3/8
UL100-2N-90V	750 MCM	1000 MCM	1	1 1/2	3 1/4	6 3/4	1/2	1/2
UL100-4N-90V	750 MCM	1000 MCM	2	3	3 1/4	6 3/4	1/2	1/2
UL100-4N4-90V	750 MCM	1000 MCM	2	4	4 1/4	7 3/4	1/2	1/2
UL150-2N-90V	1000 MCM	1500 MCM	1	2 3/4	3 1/4	7 1/4	9/16	1/2
UL150-4N-90V	1000 MCM	1500 MCM	2	3	3 1/4	7 1/4	9/16	1/2
UL150-4N4-90V	1000 MCM	1500 MCM	2	4	4 1/4	8 1/4	9/16	1/2
UL200-2N-90V	1500 MCM	2000 MCM	1	3	3 1/4	7 3/4	11/16	1/2
UL200-4N-90V	1500 MCM	2000 MCM	2	3	3 1/4	7 3/4	11/16	1/2
UL200-4N4-90V	1500 MCM	2000 MCM	2	4	4 1/4	8 3/4	11/16	1/2

© 2011, AFL, all rights reserved. PP-3-00499, Revision 0, 3.10.11
Specifications are subject to change without notice.

DOSSERT®

TYPE UL, U2L
U-Bolt Variable Terminal

A conductor U-bolt type variable terminal lug for connecting cables to flat bar busses.

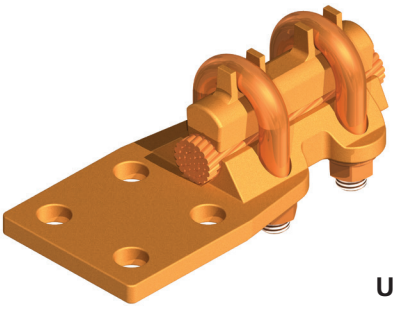

UL

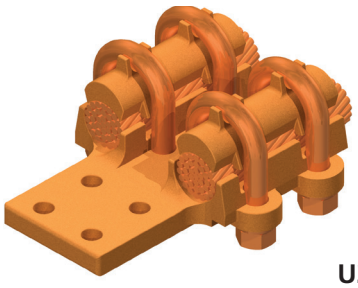

U2L

Material

Copper Alloy

Hardware

Everdur U-bolts, lockwashers and nuts.

Notes

- Contact pads other than those listed can be promptly furnished to any specified size or drilling.
- For a Two Conductor Terminal add a '2' in UL Ex:U2L150-4N4

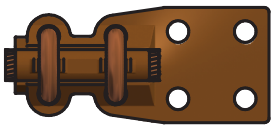

UL

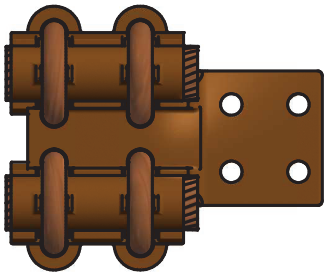

U2L

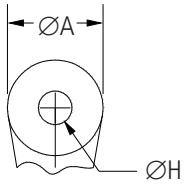

FIG. 1

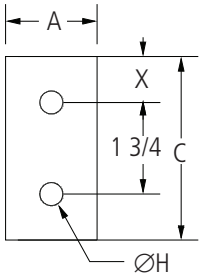

FIG. 2

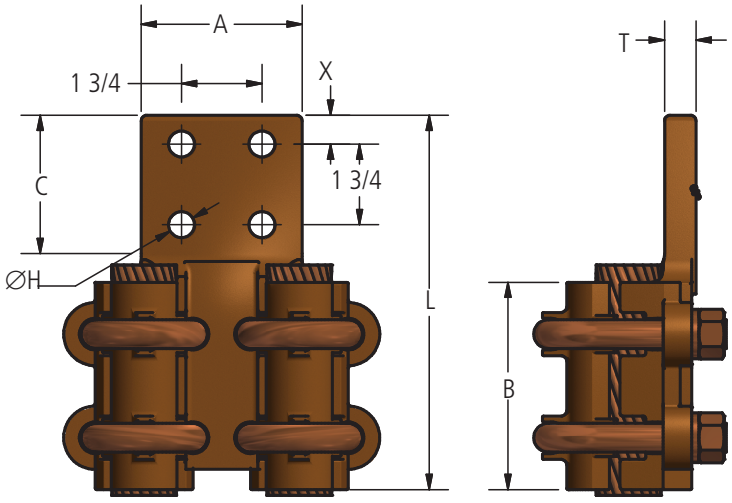

FIG. 3

© 2011, AFL, all rights reserved. PP-3-00497, Revision 2, 12.14.17
Specifications are subject to change without notice.

DOSSERT®

TYPE UL, U2L
U-Bolt Variable Terminal

Ordering Information

CATALOG NUMBER	CABLE RANGE		FIG. NO.	DIMENSIONS IN INCHES							U-BOLT SIZE
	MIN	MAX		A	B	C	H	L	T	X	
UL13-1	6 Str	2/0 Str	1	1.25	2.50	—	0.44	3.88	0.31	—	5/16
UL13-2	6 Str	2/0 Str	2	1.25	2.50	1.88	0.44	4.50	0.31	0.44	5/16
UL13-2N	6 Str	2/0 Str	2	1.50	2.50	3.00	0.56	5.75	0.31	0.63	5/16
UL21-1	1 Str	4/0 Str	1	1.50	2.63	—	0.56	4.25	0.31	—	3/8
UL21-2	1 Str	4/0 Str	2	1.25	2.63	2.13	0.44	4.88	0.31	0.50	3/8
UL21-2N	1 Str	4/0 Str	2	1.50	2.63	3.00	0.56	5.88	0.31	0.63	3/8
UL21-4N	1 Str	4/0 Str	3	3.00	2.63	3.00	0.56	5.88	0.31	0.63	3/8
UL30-1	1/0 Str	300 MCM	1	1.50	2.75	2.00	0.56	4.75	0.38	0.75	3/8
UL30-2	1/0 Str	300 MCM	2	1.63	2.75	2.63	0.56	5.50	0.38	0.63	3/8
UL30-2N	1/0 Str	300 MCM	2	1.50	2.75	3.00	0.56	6.00	0.38	0.63	3/8
UL30-4	1/0 Str	300 MCM	3	2.00	2.75	2.00	0.44	4.88	0.38	0.50	3/8
UL30-4N	1/0 Str	300 MCM	3	3.00	2.75	3.00	0.56	6.00	0.38	0.63	3/8
UL50-1	300 MCM	500 MCM	1	2.13	3.00	—	0.56	5.25	0.38	—	3/8
UL50-2	300 MCM	500 MCM	2	1.75	3.00	2.75	0.56	5.88	0.38	0.69	3/8
UL50-2N	300 MCM	500 MCM	2	1.50	3.00	3.00	0.56	6.25	0.38	0.63	3/8
UL50-4	300 MCM	500 MCM	3	2.25	3.00	2.25	0.44	5.38	0.38	0.56	3/8
UL50-4N	300 MCM	500 MCM	3	3.00	3.00	3.00	0.56	6.25	0.38	0.63	3/8
UL80-2	500 MCM	800 MCM	2	1.75	3.25	3.00	0.56	6.44	0.50	0.75	1/2
UL80-2N	500 MCM	800 MCM	2	1.75	3.25	3.00	0.56	6.50	0.50	0.63	1/2
UL80-4	500 MCM	800 MCM	3	2.25	3.25	2.25	0.44	5.69	0.50	0.56	1/2
UL80-4N	500 MCM	800 MCM	3	3.00	3.25	3.00	0.56	6.50	0.50	0.63	1/2
UL100-2	750 MCM	1000 MCM	2	2.00	3.50	3.13	0.56	6.81	0.50	0.75	1/2
UL100-2N	750 MCM	1000 MCM	2	2.00	3.50	3.00	0.56	6.75	0.50	0.63	1/2
UL100-4	750 MCM	1000 MCM	3	2.38	3.50	2.38	0.44	6.13	0.50	0.56	1/2
UL100-4N	750 MCM	1000 MCM	3	3.00	3.50	3.00	0.56	6.75	0.50	0.63	1/2
UL150-2	1000 MCM	1500 MCM	2	2.00	4.00	3.13	0.56	7.31	0.56	0.75	1/2
UL150-2N	1000 MCM	1500 MCM	2	2.00	4.00	3.00	0.56	7.25	0.56	0.63	1/2
UL150-4	1000 MCM	1500 MCM	3	2.75	4.00	2.75	0.56	6.94	0.56	0.69	1/2
UL150-4N	1000 MCM	1500 MCM	3	3.00	4.00	3.00	0.56	7.25	0.56	0.63	1/2
UL200-2	1500 MCM	2000 MCM	2	2.13	4.50	3.25	0.56	7.94	0.69	0.81	1/2
UL200-2N	1500 MCM	2000 MCM	2	2.75	4.50	3.00	0.56	7.75	0.69	0.63	1/2
UL200-4	1500 MCM	2000 MCM	3	3.13	4.50	3.13	0.56	7.81	0.69	0.75	1/2
UL200-4N	1500 MCM	2000 MCM	3	3.00	4.50	3.00	0.56	7.75	0.69	0.63	1/2

© 2011, AFL, all rights reserved. PP-3-00497, Revision 2, 12.14.17
Specifications are subject to change without notice.

DOSSERT®

TYPE ULB, U2LB

U-Bolt Terminal Lug

Material

Copper Alloy

Hardware

Everdur U-bolts, nuts, and lock washers.

Notes

- For tin plating add "-SN" to end of catalog number. Ex: ULB13-2N-SN
- For a Two Conductor Side Entrance Terminal add a '2' in the UL catalog number. Ex: U2LB13-2N

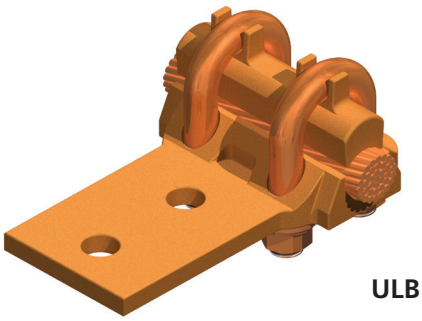

ULB

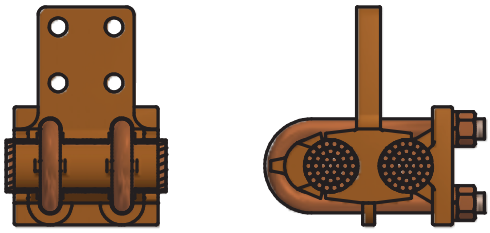

U2LB

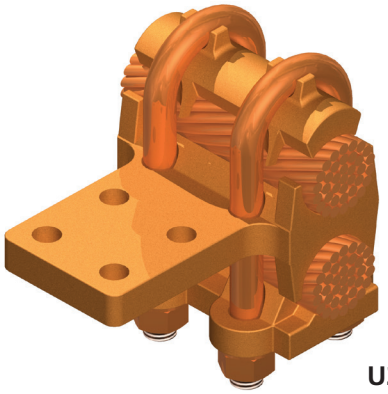

U2LB

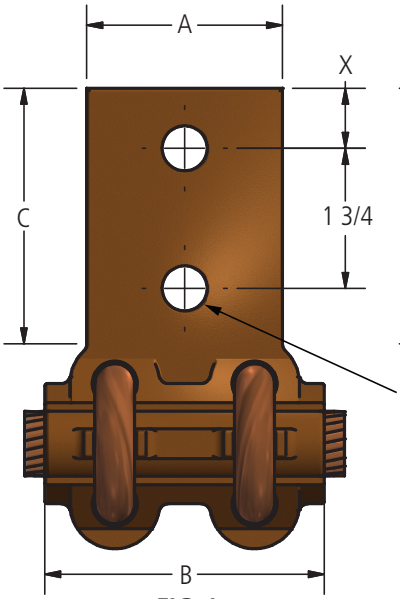

FIG. 1

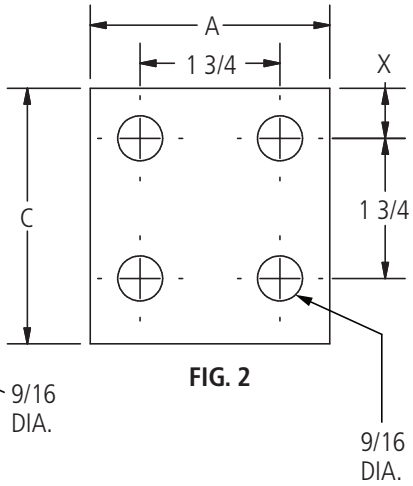

FIG. 2

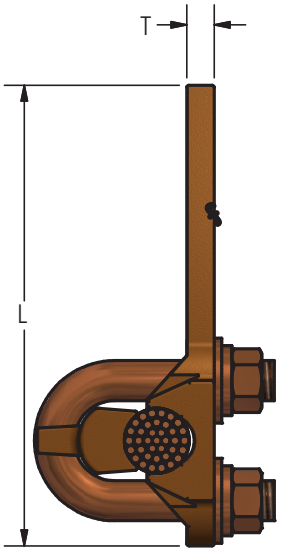

ULB

© 2011, AFL, all rights reserved. PP-3-00500, Revision 2, 7.18.2022
Specifications are subject to change without notice.

DOSSERT®

TYPE ULB, U2LB
U-Bolt Terminal Lug

Ordering Information

CATALOG NUMBER		CABLE RANGE		FIG. NO.	DIMENSIONS IN INCHES						U-BOLT SIZE
SINGLE CABLE	TWO CABLES	MIN	MAX		A	B	C	L	X	T	
ULB13-2N	U2LB13-2N	6 STR	2/0 STR	1	1 1/2	2 1/2	3	4 5/8	5/8	5/16	5/16
ULB13-4N	U2LB13-4N	6 STR	2/0 STR	1	3	2 1/2	3	4 5/8	5/8	5/16	5/16
ULB21-2N	U2LB21-2N	1 STR	4/0 STR	1	1 1/2	2 5/8	3	4 15/16	5/8	5/16	5/16
ULB21-4N	U2LB21-4N	1 STR	4/0 STR	2	3	2 5/8	3	4 15/16	5/8	5/16	5/16
ULB30-2N	U2LB30-2N	1/0 STR	300 MCM	1	1 1/2	2 3/4	3	5 1/16	5/8	3/8	5/16
ULB30-4N	U2LB30-4N	1/0 STR	300 MCM	2	3	2 3/4	3	5 1/16	5/8	3/8	5/16
ULB30-4N4	U2LB30-4N4	1/0 STR	300 MCM	2	4	2 3/4	4	6 1/16	1 1/8	3/8	5/16
ULB50-2N	U2LB50-2N	300 MCM	500 MCM	1	2	3	3	5 1/4	5/8	3/8	3/8
ULB50-4N	U2LB50-4N	300 MCM	500 MCM	2	3	3	3	5 1/4	5/8	3/8	3/8
ULB50-4N4	U2LB50-4N4	300 MCM	500 MCM	2	4	3	4	6 1/4	1 1/8	3/8	3/8
ULB80-2N	U2LB80-2N	500 MCM	800 MCM	1	1 1/2	3 1/4	3	5 7/8	5/8	1/2	1/2
ULB80-4N	U2LB80-4N	500 MCM	800 MCM	2	3	3 1/4	3	5 7/8	5/8	1/2	1/2
ULB80-4N4	U2LB80-4N4	500 MCM	800 MCM	2	4	3 1/4	4	6 7/8	1 1/8	1/2	1/2
ULB100-2N	U2LB100-2N	750 MCM	1000 MCM	1	2	3 1/2	3	6	5/8	1/2	1/2
ULB100-4N	U2LB100-4N	750 MCM	1000 MCM	2	3	3 1/2	3	6	5/8	1/2	1/2
ULB100-4N4	U2LB100-4N4	750 MCM	1000 MCM	2	4	3 1/2	4	7	1 1/8	1/2	1/2
ULB150-2N	U2LB150-2N	1000 MCM	1500 MCM	1	2	4	3	6 3/8	5/8	9/16	1/2
ULB150-4N	U2LB150-4N	1000 MCM	1500 MCM	2	3	4	3	6 3/8	5/8	9/16	1/2
ULB200-2N	U2LB200-2N	1500 MCM	2000 MCM	1	2 3/4	4 1/2	3	6 5/8	5/8	11/16	1/2
ULB200-4N	U2LB200-4N	1500 MCM	2000 MCM	2	3 1/8	4 1/2	3 1/8	6 5/8	5/8	11/16	1/2

© 2011, AFL, all rights reserved. PP-3-00500, Revision 2, 7.18.2022
Specifications are subject to change without notice.

DOSSERT®

TYPE ULI, UULI

Copper U-Bolt Variable Range Terminal

A single and double U-bolt type terminal. Each size accommodates a wide range of cable sizes. The inverted clamping member and the offset pad provides for contactmounting clearance when required.

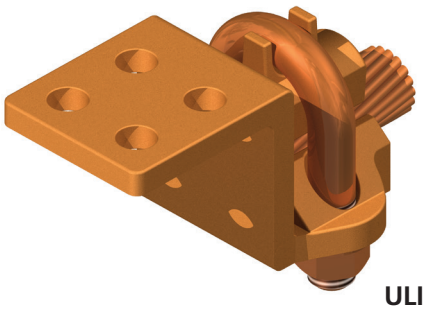

ULI

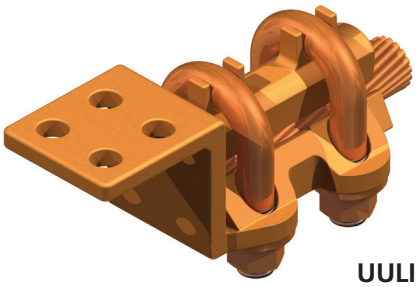

UULI

Material

High Conductivity Copper Alloy

Hardware

Everdur U-bolts, nuts and lockwashers.

Note

Contact pads can be furnished to any specification of size undrilled or drilled to specified hole sizes and center to center dimensions.

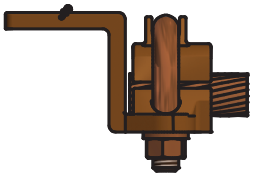

ULI

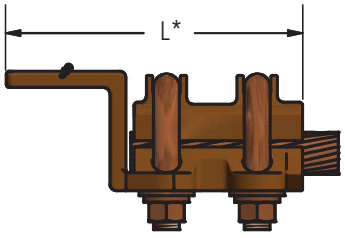

UULI

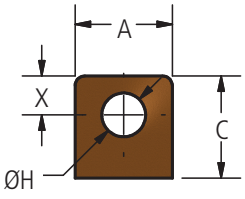

FIG. 1

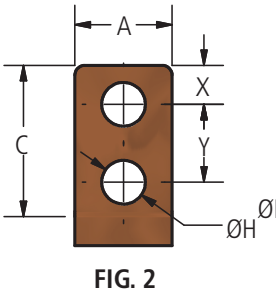

FIG. 2

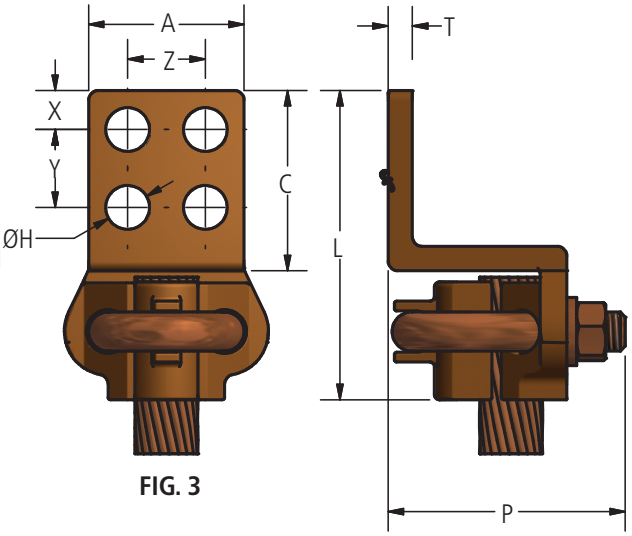

FIG. 3

© 2011, AFL, all rights reserved. PP-3-00501, Revision 2, 8.31.2022
Specifications are subject to change without notice.

DOSSERT®

TYPE ULI, UULI

Copper U-Bolt Variable Range Terminal

Ordering Information

CATALOG NUMBER		CABLE RANGE		FIG. NO.	DIMENSIONS IN INCHES										U-BOLT SIZE
ULI	UULI	MIN	MAX		A	C	H	L	L*	P	T	X	Y	Z	
ULI13-1	UULI13-1	6 SOL	2/0 STR	1	1 1/4	1 1/4	7/16	3	3	2 1/16	5/16	5/8	–	–	5/16
ULI13-2	UULI13-2	6 SOL	2/0 STR	2	1 1/4	1 7/8	7/16	3 5/8	3 5/8	2 1/16	5/16	7/16	1	–	5/16
ULI13-2N	UULI13-2N	6 SOL	2/0 STR	2	1 1/2	3	9/16	4 3/4	4 3/4	2 1/16	5/16	5/8	1 3/4	–	5/16
ULI13-4	UULI13-4	6 SOL	2/0 STR	3	2	2	7/16	3 3/4	3 3/4	2 1/16	5/16	1/2	1	1	5/16
ULI13-4N	UULI13-4N	6 SOL	2/0 STR	3	3	3	9/16	4 3/4	4 3/4	2 1/16	5/16	5/8	1 3/4	1 3/4	5/16
ULI21-1	UULI21-1	1 SOL	4/0 STR	1	1 1/2	1 1/2	9/16	3 5/16	3 5/16	2 3/16	5/16	3/4	–	–	3/8
ULI21-2	UULI21-2	1 SOL	4/0 STR	2	1 1/4	2 1/8	7/16	3 15/16	3 15/16	2 3/16	5/16	1/2	1 1/8	–	3/8
ULI21-2N	UULI21-2N	1 SOL	4/0 STR	2	1 1/2	3	9/16	4 13/16	4 13/16	2 3/16	5/16	5/8	1 3/4	–	3/8
ULI21-4	UULI21-4	1 SOL	4/0 STR	3	2	2	7/16	3 13/16	3 13/16	2 3/16	5/16	1/2	1	1	3/8
ULI21-4N	UULI21-4N	1 SOL	4/0 STR	3	3	3	9/16	4 13/16	4 13/16	2 3/16	5/16	5/8	1 3/4	1 3/4	3/8
ULI30-1	UULI30-1	1/0 STR	300 MCM	1	1 7/8	1 7/8	9/16	3 3/4	3 3/4	2 5/16	3/8	15/16	–	–	3/8
ULI30-2	UULI30-2	1/0 STR	300 MCM	2	1 5/8	2 5/8	9/16	4 1/2	4 1/2	2 5/16	3/8	5/8	1 1/8	–	3/8
ULI30-2N	UULI30-2N	1/0 STR	300 MCM	2	1 1/2	3	9/16	4 7/8	4 7/8	2 5/16	3/8	5/8	1 3/4	–	1/2
ULI30-4	UULI30-4	1/0 STR	300 MCM	3	2	2	7/16	3 7/8	3 7/8	2 5/16	3/8	1/2	1	1	3/8
ULI30-4N	UULI30-4N	1/0 STR	300 MCM	3	3	3	9/16	4 7/8	4 7/8	2 5/16	3/8	5/8	1 3/4	1 3/4	1/2
ULI50-1	UULI50-1	300 MCM	500 MCM	1	2 1/8	2 1/8	9/16	4 1/8	4 1/8	2 7/8	3/8	1 1/16	–	–	3/8
ULI50-2	UULI50-2	300 MCM	500 MCM	2	1 3/4	2 3/4	9/16	4 7/8	4 7/8	2 7/8	3/8	1 1/16	1 3/8	–	3/8
ULI50-2N	UULI50-2N	300 MCM	500 MCM	2	1 1/2	3	9/16	5 1/8	5 1/8	2 7/8	3/8	5/8	1 3/4	–	1/2
ULI50-4	UULI50-4	300 MCM	500 MCM	3	2 1/4	2 1/4	7/16	4 3/8	4 3/8	2 7/8	3/8	9/16	1 1/8	1 1/8	3/8
ULI50-4N	UULI50-4N	300 MCM	500 MCM	3	3	3	9/16	5 1/8	5 1/8	2 7/8	3/8	5/8	1 3/4	1 3/4	1/2
ULI80-1	UULI80-1	500 MCM	800 MCM	1	2 3/8	2 3/4	9/16	4 5/8	4 5/8	3 3/8	3/8	1 1/16	–	–	1/2
ULI80-2	UULI80-2	500 MCM	800 MCM	2	1 3/4	3	9/16	5 1/4	5 1/4	3 3/8	3/8	3/4	1 1/8	–	1/2
ULI80-2N	UULI80-2N	500 MCM	800 MCM	2	1 3/4	3	9/16	5 1/4	6 3/4	3 3/8	3/8	5/8	1 3/4	–	1/2
ULI80-4	UULI80-4	500 MCM	800 MCM	3	2 1/4	2 1/4	7/16	4 1/2	4 1/2	3 3/8	3/8	9/16	1 1/8	1 1/8	1/2
ULI80-4N	UULI80-4N	500 MCM	800 MCM	3	3	3	9/16	5 1/4	6 3/4	3 3/8	3/8	5/8	1 3/4	1 3/4	1/2
ULI100-1	UULI100-1	750 MCM	1000 MCM	1	2 1/2	2 1/2	9/16	4 7/8	4 7/8	3 1/2	1/2	1 1/4	–	–	1/2
ULI100-2	UULI100-2	750 MCM	1000 MCM	2	2	3 1/8	9/16	5 1/2	5 1/2	3 1/2	1/2	3/4	1 5/8	–	1/2
ULI100-2N	UULI100-2N	750 MCM	1000 MCM	2	2	3	9/16	5 3/8	5 3/8	3 1/2	1/2	5/8	1 3/4	–	1/2
ULI100-4	UULI100-4	750 MCM	1000 MCM	3	2 3/8	2 3/8	7/16	4 3/4	4 3/4	3 1/2	1/2	9/16	1 1/4	1 1/4	1/2
ULI100-4N	UULI100-4N	750 MCM	1000 MCM	3	3	3	9/16	5 3/8	5 3/8	3 1/2	1/2	5/8	1 3/4	1 3/4	1/2
ULI150-1	UULI150-1	1000 MCM	1500 MCM	1	2 3/4	2 3/4	9/16	5 1/2	5 1/2	3 3/4	9/16	1 3/8	–	–	1/2
ULI150-2	UULI150-2	1000 MCM	1500 MCM	2	2	3 1/8	9/16	5 3/4	5 3/4	3 3/4	9/16	3/4	1 5/8	–	1/2
ULI150-2N	UULI150-2N	1000 MCM	1500 MCM	2	2	3	9/16	5 5/8	5 5/8	3 3/4	9/16	5/8	1 3/4	–	1/2
ULI150-4	UULI150-4	1000 MCM	1500 MCM	3	2 3/4	2 3/4	9/16	5 3/8	5 3/8	3 3/4	9/16	11/16	1 1/2	1 1/2	1/2
ULI150-4N	UULI150-4N	1000 MCM	1500 MCM	3	3	3	9/16	5 5/8	5 5/8	3 3/4	9/16	5/8	1 3/4	1 3/4	1/2
ULI200-1	UULI200-1	1500 MCM	2000 MCM	1	2 3/4	2 3/4	9/16	5 7/8	5 7/8	4 1/8	9/16	1 3/8	–	–	1/2
ULI200-2	UULI200-2	1500 MCM	2000 MCM	2	2 1/8	3 1/4	9/16	6 1/8	6 1/8	4 1/8	9/16	11/16	1 5/8	–	1/2
ULI200-2N	UULI200-2N	1500 MCM	2000 MCM	2	2 3/4	3	9/16	5 7/8	5 7/8	4 1/8	9/16	5/8	1 3/4	–	1/2
ULI200-4	UULI200-4	1500 MCM	2000 MCM	3	3 1/8	3 1/8	9/16	6	6	4 1/8	9/16	3/4	1 3/4	1 3/4	1/2
ULI200-4N	UULI200-4N	1500 MCM	2000 MCM	3	3	3	9/16	5 7/8	5 7/8	4 1/8	9/16	5/8	1 3/4	1 3/4	1/2

L* = Length for UULI items

© 2011, AFL, all rights reserved. PP-3-00501, Revision 2, 8.31.2022
Specifications are subject to change without notice.

DOSSERT®

© 2011, AFL, all rights reserved. PP-3-00501, Revision 2, 8.31.2022
Specifications are subject to change without notice.

Table of Contents

Bronze Compression

Bronze Compression Table of Contents 217
Bronze Compression Pictorial Index 218

Bronze Compression Connectors

Type BC2KT 219
Type BCKT 220
Type CST 222
Type CSTF 224
Type CSX 225
Type DPC-T 226
Type DPC-SH1, DPC-SH2, DPC-SH-90 227
Type DPCP, DPCP-T 229
Type DPL, DPLA-45, DPLA-90 230
Type DPLE-N 233
Type DPLS 235
Type DPR 238
Type LCA 240
Type LCAE-N 241
Bronze Installation Tool Reference 242

© 2011, AFL, all rights reserved. PP-3-00030, Revision 9, 3.30.2023
Specifications are subject to change without notice.

Bronze Compression Connectors

Bronze Compression Connectors	
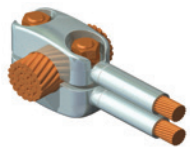	BC2KT SERIES PG. 219
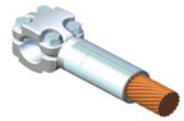	BCKT SERIES PG. 220
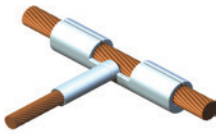	CST SERIES PG. 222
	CSTF SERIES PG. 224
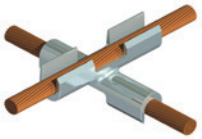	CSX SERIES PG. 225
	DPC-T SERIES PG. 226
	DPC-SH-1 SERIES PG. 227
	DPC-SH-90 SERIES PG. 227

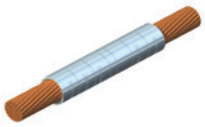	DPCP SERIES PG. 229
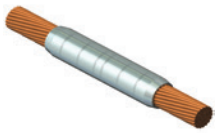	DPCP-T SERIES PG. 229
	DPL SERIES PG. 230
	DPLE-N SERIES PG. 233
	DPLS SERIES PG. 235
	DPR SERIES PG. 238
	LCA SERIES PG. 240
	LCAE-N SERIES PG. 241

© 2011, AFL, all rights reserved. PP-3-00031, Revision 9, 3.30.2023
Specifications are subject to change without notice.

DOSSERT®

TYPE BC2KT

Copper Tee Connector With Mechanical Clamp Round and Compression Tap

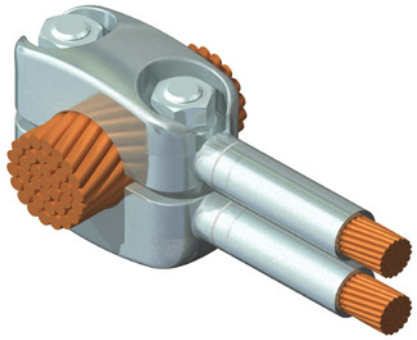

Material

Tin plated copper alloy

Hardware

Tin plated Evedur bolts and lock washers.

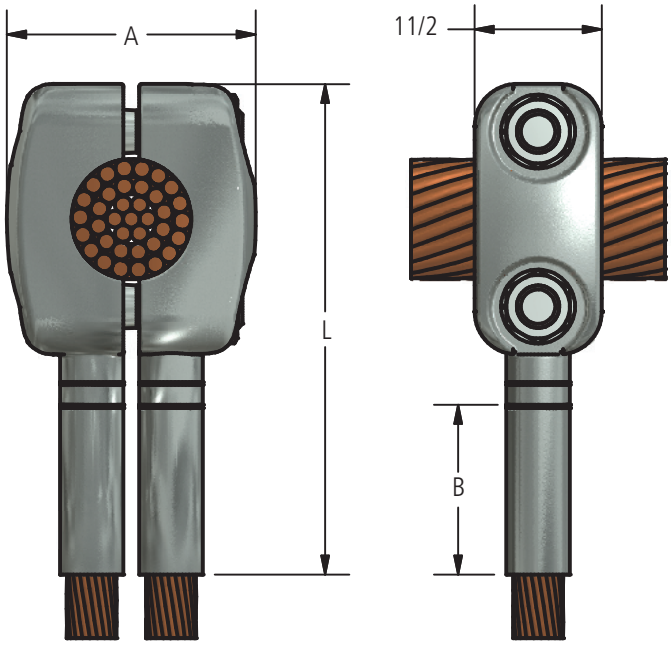

FIG. 1

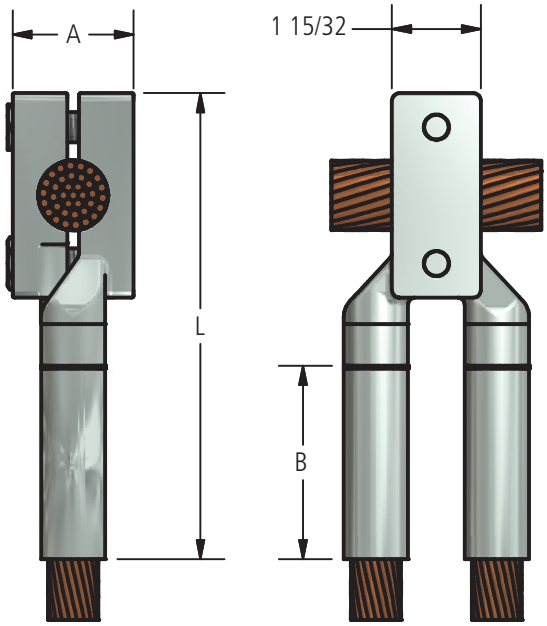

FIG. 2

Ordering Information

CATALOG NUMBER	FIG. NO.	CABLE SIZE		DIMENSION IN INCHES		
		RUN	TAP	A	B	L
BC2KT50-25	1	500 MCM	250 MCM	2 7/32	2	4 29/32
BC2KT100-25	1	1000 MCM	250 MCM	2 5/8	2	5 9/16
BC2KT100-50-S	2	1000 MCM	500 MCM	2	3 3/8	7 11/16
BC2KT150-25	1	1500 MCM	250 MCM	2 13/16	2	5 13/16
BC2KT150-50-S	2	1500 MCM	500 MCM	2	3 3/8	7 11/16

For information on installation tools refer to pages 246 and 247.

© 2011, AFL, all rights reserved. PP-3-00241, Revision 1, 3.28.2023
Specifications are subject to change without notice.

DOSSERT®

TYPE BCKT

Copper Tee Connector With Mechanical Clamp Rund and Compression Tap

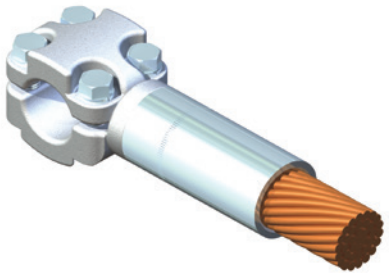

A tee connector composed of a clamp type run element and a compression type connector for the tap. This connector has a wide application where various taps are to be taken from a continuous run.

Material

Tin plated copper alloy

Hardware

Tin plated Everdur bolts and lock washers.

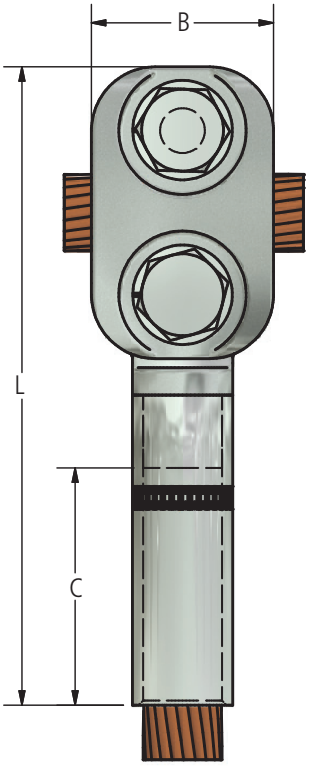

FIG. 1

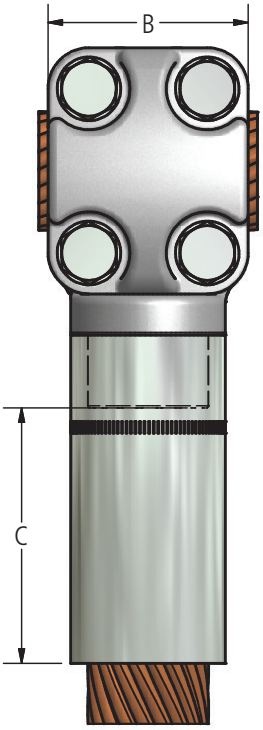

FIG. 2

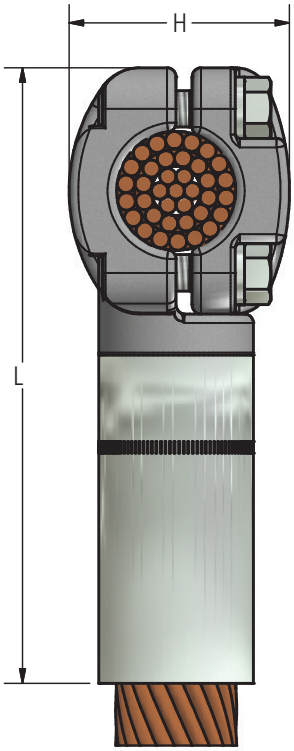

© 2011, AFL, all rights reserved. PP-3-00242, Revision 1, 3.28.2023
Specifications are subject to change without notice.

DOSSERT®

TYPE BCKT

Copper Tee Connector With Mechanical Clamp Rund and Compression Tap

Ordering Information

CATALOG NUMBER	CONDUCTOR SIZE		FIG. NO.	DIMENSIONS IN INCHES			
	RUN	TAP		B	C	H	L
BCKT21-6	4/0 STR	2 STR	1	1 1/2	1 5/16	1 1/2	3 7/8
BCKT21-10	4/0 STR	1/0 STR	1	1 1/2	1 7/16	1 1/2	4 1/16
BCKT21-13	4/0 STR	2/0 STR	1	1 1/2	1 9/16	1 1/2	4 3/16
BCKT21-21	4/0 STR	4/0 STR	2	2 1/8	1 11/16	1 1/2	4 3/8
BCKT25-6	250 MCM	2 STR	1	1 1/2	1 5/16	1 1/2	3 7/8
BCKT29-10	250 MCM	1/0 STR	1	1 1/2	1 7/16	1 1/2	4 1/8
BCKT25-13	250 MGM	2/0 STR	1	1 1/2	1 9/16	1 1/2	4 1/4
BCKT25-21	250 MCM	4/0 STR	2	2 1/8	1 11/16	1 1/2	4 7/16
BCKT25-25	250 MCM	250 MCM	2	2 1/8	1 11/16	1 1/2	4 1/2
BCKT35-10	350 MCM	1/0 STR	1	2 1/8	1 7/16	1 9/16	4 3/16
BCKT35-13	350 MCM	2/0 STR	1	1 1/2	1 9/16	1 9/16	4 3/8
BCKT35-21	350 MCM	4/0 STR	2	2 1/8	1 11/16	1 9/16	4 9/16
BCKT35- 25	350 MCM	250 MCM	2	2 1/8	1 11/16	1 9/16	4 /8
BCKT35-35	350 MCM	350 MCM	2	2 1/8	2 1/8	1 9/16	5 1/16
BCKT50-13	500 MCM	2/0 STR	1	1 1/2	1 9/16	1 11/16	4 1/2
BCKT50-21	500 MCM	4/0 STR	2	2 1/8	1 11/16	1 11/16	4 11/16
BCKT50-25	500 MCM	250 MCM	2	2 1/8	1 11/16	1 11/16	4 3/4
BCKT50-35	500 MCM	350 MCM	2	2 1/8	2 1/8	1 11/16	5 1/8
BCKT50-50	500 MCM	500 MCM	2	2 1/8	2 1/4	1 11/16	5 7/16
BCKT75-13	750 MCM	2/0 STR	1	1 1/2	1 9/16	1 7/8	4 11/16
BCKT25-21	750 MCM	4/0 STR	2	2 1/8	1 11/16	1 7/8	4 7/8
BCKT75-25	750 MCM	250 MCM	2	2 1/8	1 11/16	1 7/8	4 15/16
BCKT75-35	750 MCM	350 MCM	2	2 1/8	2 1/8	1 7/8	4 5/16
BCKT75-50	750 MCM	500 MCM	2	2 1/8	2 1/4	1 7/8	5 5/8
BCKT79-75	750 MCM	750 MCM	2	2 1/8	2 7/8	1 7/8	6 5/16
BCKT100-13	1000 MCM	2/0 STR	1	1 1/2	1 9/16	2 3/16	4 13/16
BCKT100-21	1000 MCM	4/0 STR	2	2 1/8	1 11/16	2 3/16	5
BCKT100-25	1000 MCM	250 MCM	2	2 1/8	1 11/16	2 3/16	5 1/16
BCKT100-35	1000 MCM	350 MCM	2	2 1/8	2 1/8	2 3/16	5 1/2
BCKT100-50	1000 MCM	500 MCM	2	2 1/8	2 1/4	2 3/16	5 13/15
BCKT100-75	1000 MCM	750 MCM	2	2 1/8	2 7/8	2 1/4	6 7/16
BCKT100-100	1000 MCM	1000 MCM	2	2 3/4	3	2 3/8	7 1/16

For information on installation tools refer to pages 246 and 247.

© 2011, AFL, all rights reserved. PP-3-00242, Revision 1, 3.28.2023
Specifications are subject to change without notice.

DOSSERT®

TYPE CST

Copper Compression Tee Connector For Cable To Cable

A tee connector with compression elements on both run and tap. Designed to make tap connections on a continuous run. Run member is U-shaped before installation and after compression the heavily tapered tabs conform to cable to produce a secure electrical and mechanical connection.

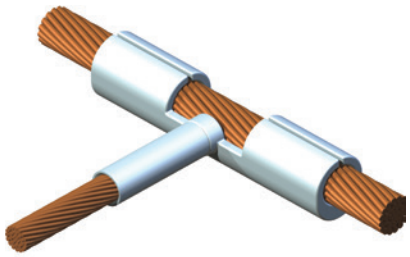

Material

Tin plated copper alloy

Note

Tool references furnished upon request.

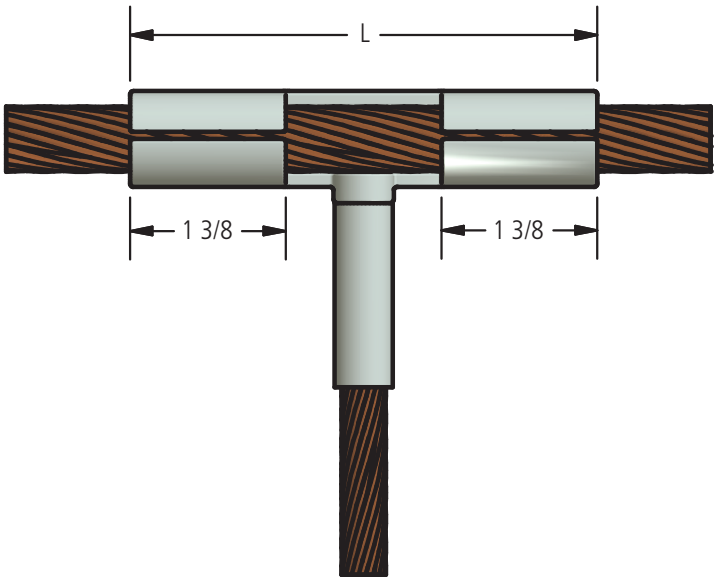

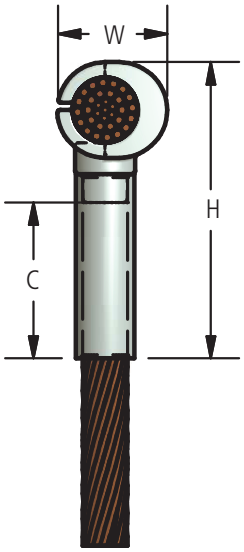

© 2011, AFL, all rights reserved. PP-3-00295, Revision 2, 3.28.2023
Specifications are subject to change without notice.

DOSSERT®

TYPE CST

Copper Compression Tee Connector For Cable To Cable

Ordering Information

CATALOG NUMBER	CABLE RANGE		DIMESIONS IN INCHES				NUMBER OF INDENT
	RUN	TAP	C	H	L	W	
CST13-13	2/0 Str.	2/0 Str.	1 1/2	2 1/2	3 13/16	5/8	1
CST21-2	4/0 Str.	6 Str.	1 1/4	2 5/16	3 3/4	7/8	1
CST21-4	4/0 Str.	4 Str.	1 1/4	2 5/16	3 3/4	7/8	1
CST21-6	4/0 Str.	2 Str.	1 5/16	2 7/16	3 3/4	7/8	1
CST21-8	4/0 Str.	1 Str.	1 3/8	2 9/16	4	7/8	1
CST21-10	4/0 Str.	1/0 Str.	1 3/8	2 9/16	4	7/8	1
CST21-13	4/0 Str.	2/0 Str.	1 1/2	2 11/16	4	7/8	1
CST21-17	4/0 Str.	3/0 Str.	1 1/2	2 11/16	4	7/8	1
CST21-21	4/0 Str.	4/0 Str.	1 5/8	2 3/4	4	7/8	1
CST25-2	250 kcmil	6 Str.	1 1/4	2 3/8	3 13/16	15/16	1
CST25-4	250 kcmil	4 Str.	1 1/4	2 3/8	3 13/16	15/16	1
CST25-6	250 kcmil	2 Str.	1 5/16	2 1/2	3 13/16	15/16	1
CST25-8	250 kcmil	1 Str.	1 3/8	2 5/8	3 13/16	15/16	1
CST25-10	250 kcmil	1/0 Str.	1 3/8	2 5/8	4 1/8	15/16	1
CST25-13	250 kcmil	2/0 Str.	1 1/2	2 3/4	4 1/8	15116	1
CST25-17	250 kcmil	3/0 Str.	1 1/2	2 3/4	4 1/8	15/16	1
CST25-21	250 kcmil	4/0 Str.	1 5/8	2 7/8	4 1/8	15/16	1
CST25-25	250 kcmil	250 kcmil	1 5/8	2 7/8	4 1/8	15/16	1
CST35-2	350 kcmil	6 Str.	1 1/4	2 5/8	4 1/16	1 1/16	1
CST35-4	350 kcmil	4 Str.	1 1/4	2 5/8	4 1/16	1 1/16	1
CST35-6	350 kcmil	2 Str.	1 5/16	2 11/16	4 1/16	1 1/16	1
CST35-8	350 kcmil	1 Str.	1 3/8	2 13/16	4 1/16	1 1/16	1
CST35-10	350 kcmil	1/0 Str.	1 3/8	2 3/4	4 1/16	1 1/16	1
CST35-13	350 kcmil	2/0 Str.	1 1/2	2 7/8	4 1/16	1 1/16	1
CST35-17	350 kcmil	3/0 Str.	1 1/2	2 7/8	4 9/16	1 1/16	1
CST35-21	350 kcmil	4/0 Str.	1 5/8	3	4 9/16	1 1/16	1
CST35-25	350 kcmil	250 kcmil	1 5/8	3	4 9/16	1 1/16	1
CST35-35	350 kcmil	350 kcmil	2	3 3/8	4 9/16	1 1/16	2
CST50-4	500 kcmil	4 Str.	1 1/4	2 3/4	4 3/16	1 1/16	1
CST50-6	500 kcmil	2 Str.	1 5/16	2 7/8	4 3/16	1 1/16	1
CST50-8	500 kcmil	1Str.	1 3/8	2 15/16	4 3/16	1 1/16	1
CST50-10	500 kcmil	1/0 Str.	1 3/8	2 15/16	4 3/16	1 1/16	1
CST50-13	500 kcmil	2/0 Str.	1 1/2	3 1/16	4 3/16	1 1/16	1
CST50-17	500 kcmil	3/0 Str.	1 1/2	3	4 11/16	1 1/16	1
CST50-21	500 kcmil	4/0 Str.	1 5/8	3 1/8	4 11/16	1 1/16	1
CST50-25	500 kcmil	250 kcmil	1 5/8	3 1/8	4 11/16	1 1/16	1
CST50-35	500 kcmil	350 kcmil	2	3 1/2	4 11/16	1 1/16	2
CST50-50	500 kcmil	500 kcmil	2 1/4	3 3/4	4 11/16	1 1/16	2

© 2011, AFL, all rights reserved. PP-3-00295, Revision 2, 3.28.2023
Specifications are subject to change without notice.

DOSSERT®

TYPE CSTF
Compression Tap Connector

Material
Tin plated copper alloy

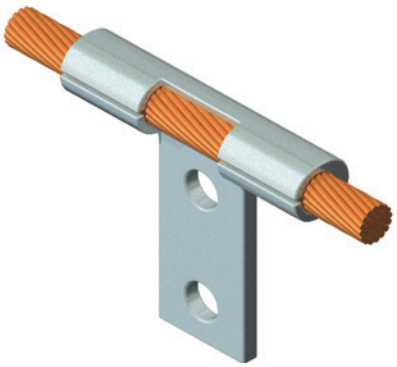

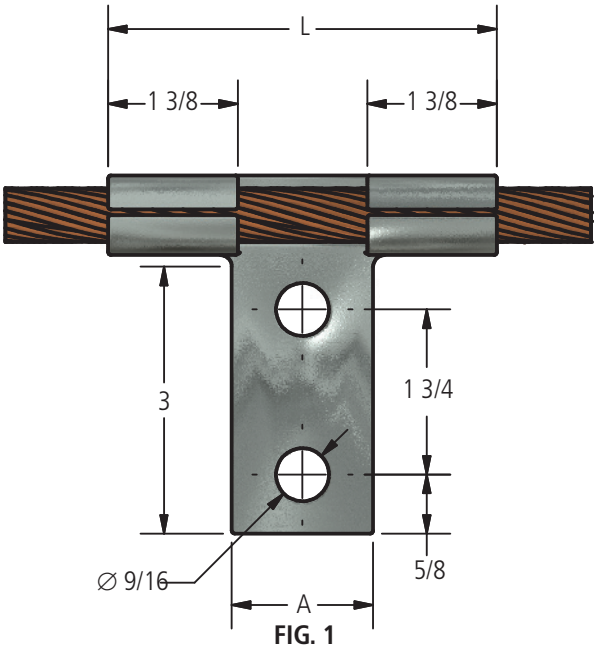

FIG. 1

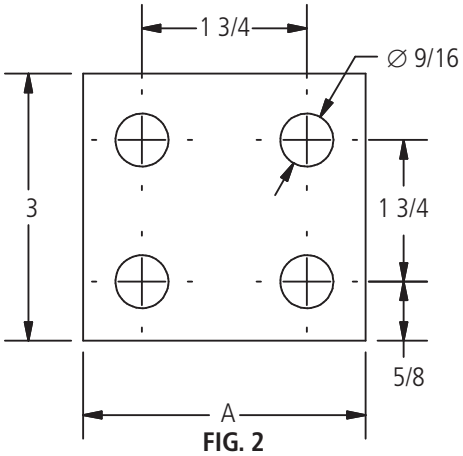

FIG. 2

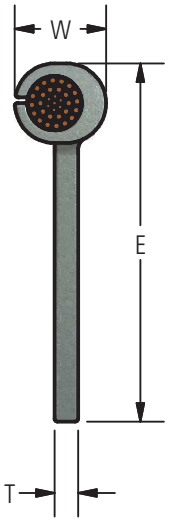

Ordering Information

CATALOG NUMBER	CABLE SIZE	FIG. NO.	DIMENSIONS IN INCHES				
			A	E	L	T	W
CSTF13-1-2N	2/0 STR	1	1 1/2	3 7/8	4 3/4	1/4	3/4
CSTF21-1-2N	4/0 STR	1	1 1/2	4 1/16	4 3/4	1/4	7/8
CSTF21-1-4N	4/0 STR	2	3	4 1/16	6 1/4	1/4	7/8
CSTF35-1-2N	350 MCM	1	1 1/2	4 3/16	4 3/4	5/16	1 1/16
CSTF35-1-4N	350 MCM	2	3	4 3/16	6 1/4	5/16	1 1/16
CSTF50-1-4N	500 MCM	2	3	4 5/16	6 1/4	3/8	1 3/16

© 2011, AFL, all rights reserved. PP-3-00296, Revision 2, 3.28.2023
Specifications are subject to change without notice.

DOSSERT®

TYPE CSX
Compression Cross Connector

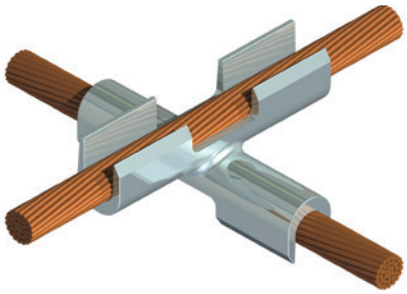

Material

Tin plated copper alloy

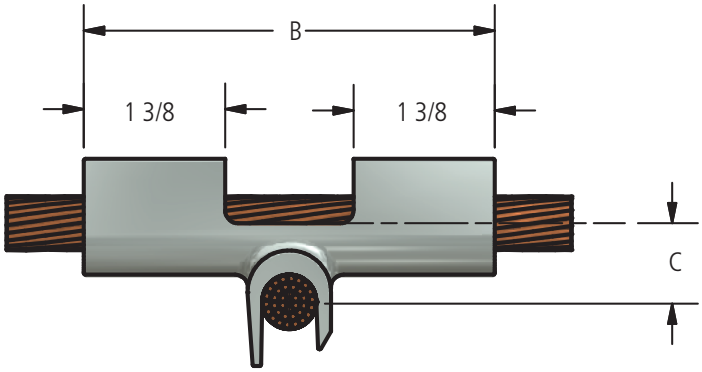

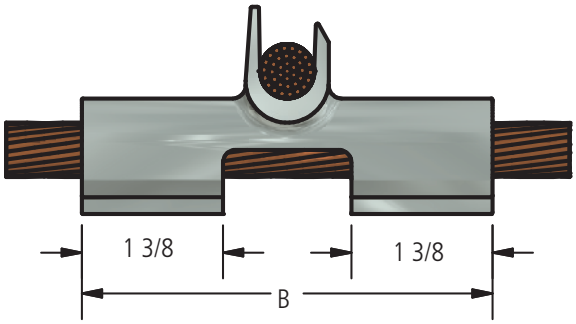

Ordering Information

CATALOG NUMBER	CONDUCTOR SIZE		DIMENSIONS IN INCHES	
			B	C
CSX13-13	2/0 STR	2/0 STR	3 13/16	19/32
CSX21-13	4/0 STR	2/0 STR	4 1/4	3/4
CSX21-21	4/0 STR	4/0 STR	4 1/4	25/32
CSX50-50	500 MCM	500 MCM	4 5/8	1 1/8

© 2011, AFL, all rights reserved. PP-3-00297, Revision 1, 3.28.2023
Specifications are subject to change without notice.

Bronze Compression Connectors

DOSSERT®

TYPE DPC-T

Copper Compression Coupler For Cable

A seamless sleeve coupler for splicing two cables end to end. This coupler is designed to fit the assembling dies of all standard hydraulic presses. Installation is quickly effected by slipping the connector over the free cable ends and forming indentations.

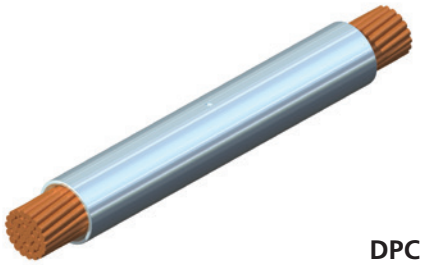

DPC

Material

Tin plated copper alloy

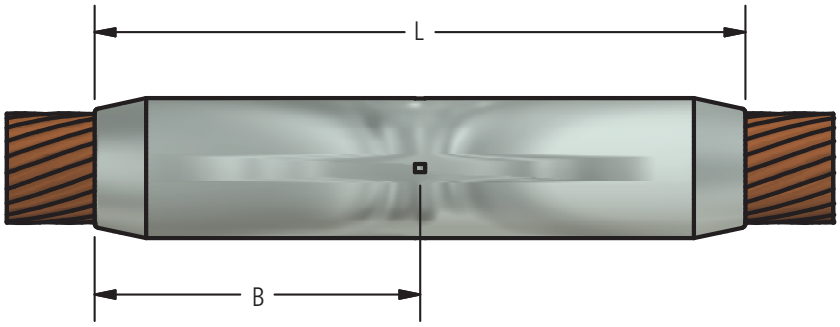

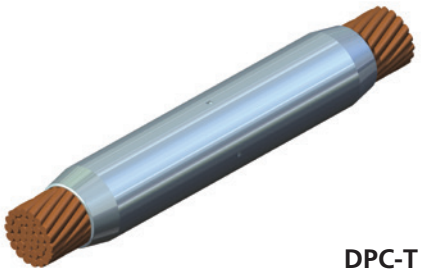

DPC-T

Ordering Information

CATALOG NUMBER		CABLE SIZE	DIMENSIONS IN INCHES	
STANDARD	TAPERED		B	L
DPC2	DPC2-T	6 Str.	1 1/8	2 5/16
DPC4	DPC4-T	4 Str.	1 1/8	2 5/16
DPC5	DPC5-T	3 Str.	1 1/4	2 5/8
DPC6	DPC6-T	2 Str.	1 1/4	2 5/8
DPC8	DPC8-T	1 Str.	1 7/16	3
DPC10	DPC10-T	1/0 Str.	1 7/16	3
DPC13	DPC13-T	2/0 Str.	1 1/2	3 1/8
DPC17	DPC17-T	3/0 Str.	1 1/2	3 1/8
DPC21	DPC21-T	4/0 Str.	1 5/8	3 3/8
DPC25	DPC25-T	250 MCM	1 5/8	3 3/8
DPC30	DPC30-T	300 MCM	2 1/16	4 1/4
DPC35	DPC35-T	350 MCM	2 1/16	4 1/4
DPC40	DPC40-T	400 MCM	2 1/8	4 3/8
DPC45	DPC45-T	450 MCM	2 1/8	4 3/8
DPC50	DPC50-T	500 MCM	2 1/4	4 5/8
DPC55	DPC55-T	550 MCM	2 5/8	5 3/8
DPC60	DPC60-T	600 MCM	2 11/16	5 1/2
DPC65	DPC65-T	650 MCM	2 13/16	5 3/4
DPC75	DPC75-T	750 MCM	2 7/8	5 7/8
DPC80	DPC80-T	800 MCM	2 15/16	6
DPC85	DPC85-T	850 MCM	2 15/16	6
DPC100	DPC100-T	1000 MCM	3	6 1/8
DPC125	DPC125-T	1250 MCM	3 1/4	6 5/8
DPC130	DPC130-T	1300 MCM	3 1/4	6 5/8
DPC150	DPC150-T	1500 MCM	3 1/4	6 5/8
DPC175	DPC175-T	1750 MCM	3 1/2	7 1/8
DPC200	DPC200-T	2000 MCM	3 1/2	7 1/8

For information on installation tools refer to pages 246 and 247.

© 2011, AFL, all rights reserved. PP-3-00315, Revision 1, 3.28.2023
Specifications are subject to change without notice.

DOSSERT®

TYPE DPC-SH1, DPC-SH2, DPC-SH-90

Cable Terminal



A compression seal plug for terminating a cable with a straight stud end. The cable receiving socket is provided with a shroud which makes a close fit over cable insulation. A weather seal for cable risers is provided by the shroud. Stud is specially bonded to cable socket element to form a single unit possessing high mechanical strength and high electrical conductivity. Made of pure copper and tin plated.

Material

Copper Alloy Electro Tin Plated



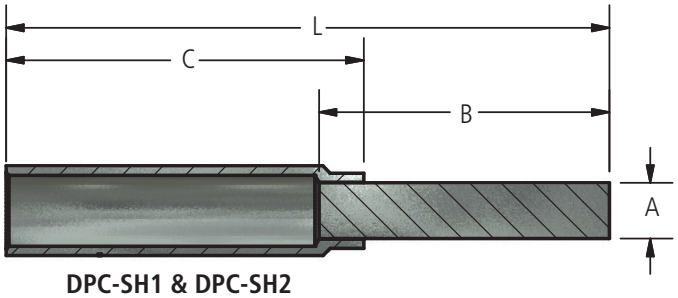

DPC-SH1 & DPC-SH2



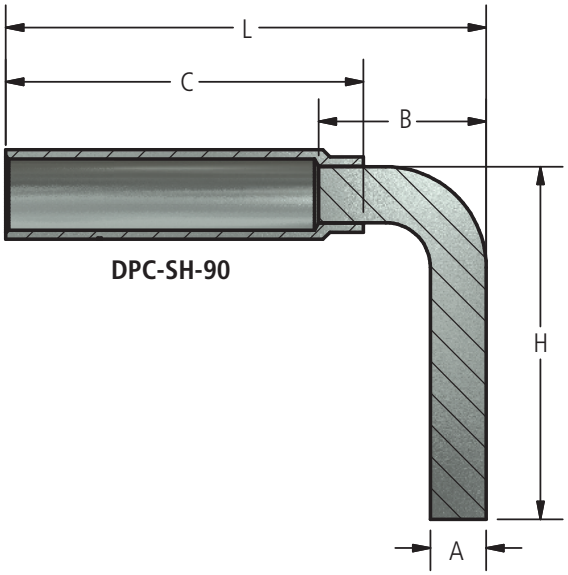

DPC-SH-90

© 2011, AFL, all rights reserved. PP-3-00314, Revision 2, 3.28.2023
Specifications are subject to change without notice.

DOSSERT®

TYPE DPC-SH1, DPC-SH2, DPC-SH-90
Cable Terminal

Ordering Information

SH1 - SHORT TYPE							
CATALOG NUMBER	CABLE SIZE	DIMENSIONS IN INCHES					INDEX NO.
		A	B	C	H	L	
DPC4-SH1	#4 STR.	0.187	1.50	1.44	–	2.688	#8
DPC6-SH1	#2 STR.	0.250	1.56	1.56	–	2.880	#10
DPC8-SH1	#1 STR.	0.250	1.63	1.81	–	3.188	#11
DPC10-SH1	1/0 STR.	0.313	1.63	2.00	–	3.380	#12
DPC13-SH1	2/0 STR.	0.313	1.63	1.94	–	3.310	#13
DPC17-SH1	3/0 STR.	0.313	2.19	1.88	–	3.813	#14
DPC21-SH1	4/0 STR.	0.375	2.19	2.06	–	4.000	#15
DPC25-SH1	250 MCM	0.375	2.13	2.16	–	3.910	#16
DPC35-SH1	350 MCM	0.438	2.13	2.59	–	4.340	#18
DPC50-SH1	500 MCM	0.500	2.91	3.13	–	5.530	#20
DPC75-SH1	750 MCM	0.500	4.38	3.88	–	7.875	#24

SH2 - LONG TYPE							
CATALOG NUMBER	CABLE SIZE	DIMENSIONS IN INCHES					INDEX NO.
		A	B	C	H	L	
DPC4-SH2	#4 STR.	0.188	10.25	1.44	–	11.438	#8
DPC6-SH2	#2 STR.	0.250	10.25	1.56	–	11.560	#10
DPC8-SH2	#1 STR.	0.250	10.25	1.81	–	11.810	#11
DPC10-SH2	1/0 STR.	0.313	10.25	2.00	–	12.000	#12
DPC13-SH2	2/0 STR.	0.313	10.25	1.94	–	11.940	#13
DPC17-SH2	3/0 STR.	0.313	10.25	1.88	–	11.880	#14
DPC21-SH2	4/0 STR.	0.375	10.25	2.06	–	12.060	#15
DPC25-SH2	250 MCM	0.375	10.38	2.16	–	12.160	#16
DPC35-SH2	350 MCM	0.438	10.38	2.59	–	12.590	#18
DPC50-SH2	500 MCM	0.500	10.50	3.13	–	13.130	#20
DPC75-SH2	750 MCM	0.500	10.38	3.88	–	13.880	#24

SH-90 TYPE							
CATALOG NUMBER	CABLE SIZE	DIMENSIONS IN INCHES					INDEX NO.
		A	B	C	H	L	
DPC4-SH-90	#4 STR.	0.188	0.75	1.44	1.75	1.940	#8
DPC6-SH-90	#2 STR.	0.250	0.88	1.56	1.88	2.190	#10
DPC8-SH-90	#1 STR.	0.250	0.88	1.81	1.88	2.438	#11
DPC10-SH-90	1/0 STR.	0.313	0.94	2.00	1.97	2.690	#12
DPC13-SH-90	2/0 STR.	0.313	1.00	1.94	1.97	2.690	#13
DPC17-SH-90	3/0 STR.	0.313	1.00	1.88	1.97	2.630	#14
DPC21-SH-90	4/0 STR.	0.375	1.00	2.06	2.13	2.810	#15
DPC25-SH-90	250 MCM	0.375	1.13	2.16	2.63	3.030	#16
DPC35-SH-90	350 MCM	0.438	1.25	2.59	2.75	3.590	#18
DPC50-SH-90	500 MCM	0.500	1.38	3.13	3.25	4.250	#20

For information on installation tools refer to pages 246 and 247.

© 2011, AFL, all rights reserved. PP-3-00314, Revision 2, 3.28.2023
Specifications are subject to change without notice.

DOSSERT®

TYPE DPCP, DPCP-T

Material

Tin plated copper alloy

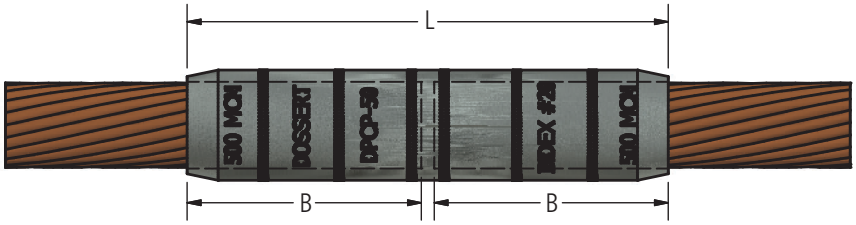

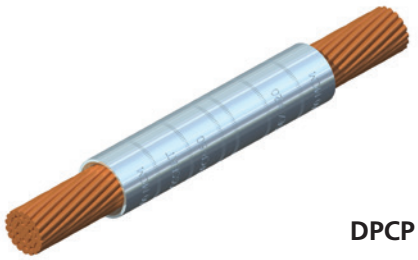

DPCP

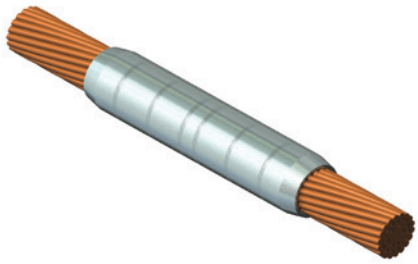

DPCP-T

Ordering Information

CATALOG NUMBER		CABLE SIZE	DIMENSIONS IN INCHES	
DPCP	DPCP-T		B	L
DPCP2	DPCP2-T	6 Str.	1 1/8	2 3/8
DPCP4	DPCP4-T	4 Str.	1 1/8	2 3/8
DPCP6	DPCP6-T	2 Str.	1 1/4	2 5/8
DPCP8	DPCP8-T	1 Str.	1 3/8	2 7/8
DPCP10	DPCP10-T	1/0 Str.	1 3/8	2 7/8
DPCP13	DPCP13-T	2/0 Str.	1 1/2	3 1/8
DPCP17	DPCP17-T	3/0 Str.	1 1/2	3 1/8
DPCP21	DPCP21-T	4/0 Str.	1 5/8	3 3/8
DPCP25	DPCP25-T	250 MCM	1 5/8	3 3/8
DPCP30	DPCP30-T	300 MCM	2	4 1/8
DPCP35	DPCP35-T	350 MCM	2	4 1/8
DPCP40	DPCP40-T	400 MCM	2 1/8	4 3/8
DPCP50	DPCP50-T	500 MCM	2 1/4	4 5/8
DPCP60	DPCP60-T	600 MCM	2 11/16	5 1/2
DPCP75	DPCP75-T	750 MCM	2 7/8	5 7/8
DPCP80	DPCP80-T	800 MCM	2 15/16	6
DPCP100	DPCP100-T	1000 MCM	3	6 1/8
DPCP125	DPCP125-T	1250 MCM	3 3/16	6.5
DPCP150	DPCP150-T	1500MCM	3 3/16	6.5
DPCP200	DPCP200-T	2000 MCM	3 7/16	7

For information on installation tools refer to pages 246 and 247.

© 2011, AFL, all rights reserved. PP-3-00313, Revision 1, 3.28.2023
Specifications are subject to change without notice.

DOSSERT®

TYPE DPL, DPLA-45, DPLA-90

Copper Long Barrel Compression Terminal
DPLA-45 is at an angle of 45° and DPLA-90 is at an angle of 90°.

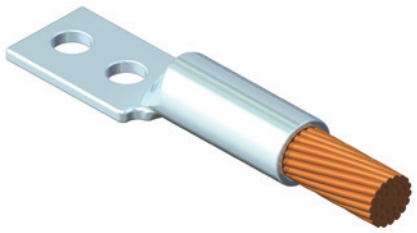

A precision made compression terminal lug for a full range of conductor sizes with 1, 2 and 4 hole pads in the larger sizes. Conductor is secured by indenting the barrel with any standard compression tool made for electrical lugs.

Material

Tin plated high conductivity copper alloy

Notes

- Terminal pads can be drilled to custom hole sizes and spacing.
- For a 45° angle, add suffix "-45" to end of catalog number and an "A" in the catalog number. EX: DPLA2-1-45
- For a 90° angle, add suffix "-90" to end of catalog number EX: DPLA2-1-90

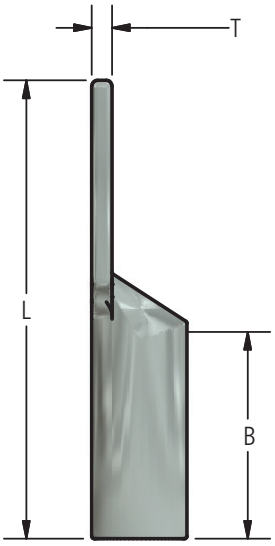

FIG. 1

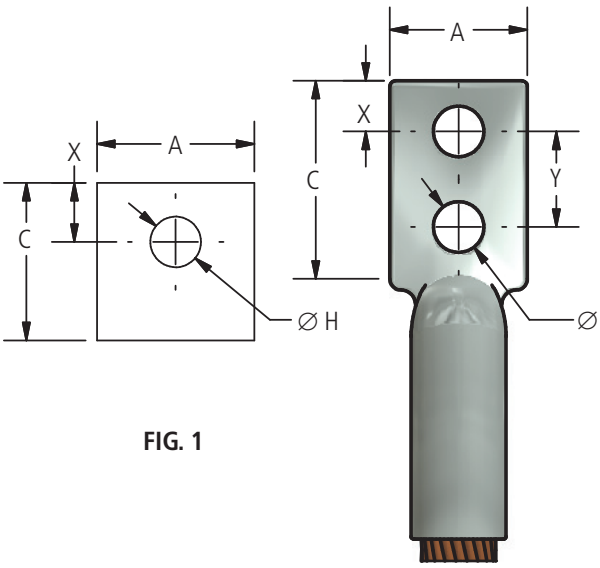

FIG. 2

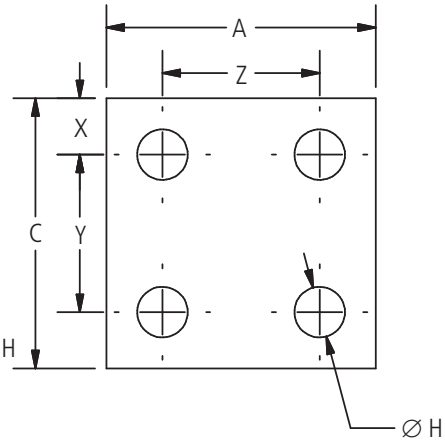

FIG. 3

continued

© 2011, AFL, all rights reserved. PP-3-00316, Revision 3, 3.28.2023
Specifications are subject to change without notice.

DOSSERT®

TYPE DPL, DPLA-45, DPLA-90

Copper Long Barrel Compression Terminal

Ordering Information

CATALOG NUMBER	CABLE SIZE	FIG. NO.	DIMENSIONS IN INCHES									DIE INDEX
			A	B	C	H	L	T	X	Y	Z	
DPL2-1	#6 STR	1	7/16	1 1/8	11/16	9/32	2 1/16	5/64	5/16	-	-	7
DPL2-2	#6 STR	2	7/16	1 1/8	1 5/16	9/32	2 11/16	5/64	5/16	5/8	-	7
DPL2-2N	#6 STR	2	1	1 1/8	3	9/16	5	7/64	5/8	1 3/4	-	7
DPL2-38	#6 STR	1	19/32	1 1/8	13/16	13/32	2 3/16	5/64	3/8	-	-	7
DPL4-1	#4 STR	1	1/2	1 1/8	11/16	9/32	2 3/32	3/32	5/16	-	-	8
DPL4-2	#4 STR	2	1/2	1 1/8	1 5/16	9/32	2 23/32	3/32	5/16	5/8	-	8
DPL4-38	#4 STR	1	19/32	1 1/8	13/16	13/32	2 3/16	3/32	3/8	-	-	8
DPL5-1	#3 STR	1	17/32	1 1/4	3/4	11/32	2 1/4	11/32	3/32	-	-	9
DPL5-2	#3 STR	2	17/32	1 1/4	1 1/2	11/32	3	11/32	3/32	3/4	-	9
DPL6-1	#2 STR	1	5/8	1 1/4	3/4	11/32	2 11/32	3/32	11/32	-	-	10
DPL6-2	#2 STR	2	5/8	1 1/4	1 1/2	11/32	3 3/32	3/32	11/32	3/4	-	10
DPL6-2N	#2 STR	2	13/16	1 1/4	3 1/16	9/16	4 3/4	5/64	5/8	1 3/4	-	10
DPL6-38	#2 STR	1	5/8	1 1/4	7/8	13/32	2 15/32	3/32	13/32	-	-	10
DPL6-50	#2 STR	1	13/16	1 1/4	1 1/4	9/16	3	5/64	5/8	-	-	10
DPL8-1	#1 STR	1	11/16	1 3/8	3/4	11/32	2 3/8	3/32	11/32	-	-	11
DPL8-2	#1 STR	2	11/16	1 3/8	1 5/8	11/32	3 1/4	3/32	11/32	7/8	-	11
DPL8-38	#1 STR	1	11/16	1 3/8	7/8	13/32	2 1/2	3/32	13/32	-	-	11
DPL8-50	#1 STR	1	13/16	1 3/8	1 5/16	9/16	3 3/8	5/64	5/8	-	-	11
DPL10-1	1/0 STR	1	3/4	1 3/8	3/4	11/32	2 9/16	7/64	11/32	-	-	12
DPL10-2	1/0 STR	2	3/4	1 3/8	1 5/8	11/32	3 7/16	7/64	11/32	7/8	-	12
DPL10-2N	1/0 STR	2	13/16	1 3/8	3 1/16	9/16	4 7/8	3/32	5/8	1 3/4		12
DPL10-38	1/0 STR	1	3/4	1 3/8	13/16	13/32	2 5/8	7/64	3/8	-	-	12
DPL10-50	1/0 STR	1	13/16	1 3/8	1 1/4	9/16	2 7/8	3/32	5/8	-	-	12
DPL13-1	2/0 STR	1	13/16	1 1/2	13/16	7/16	2 3/4	1/8	3/8	-	-	13
DPL13-2	2/0 STR	2	13/16	1 1/2	1 5/8	11/32	3 9/16	1/8	11/32	7/8		13
DPL13-2N	2/0 STR	2	13/16	1 1/2	3 1/16	9/16	5	1/8	5/8	1 3/4		13
DPL13-50	2/0 STR	1	13/16	1 1/2	1 1/4	9/16	3 1/4	1/8	5/8	-	-	13
DPL17-1	3/0 Str.	1	29/32	1 1/2	1 1/4	9/16	3 /32	9/64	5/8	-	-	14
DPL17-2	3/0 Str	2	29/32	1 1/2	1 13/16	7/16	3 25/32	9/64	3/8	1	-	14
DPL17-2N	3/0 Str	2	29/32	1 1/2	3 1/16	9/16	5 1/32	9/64	5/8	1 3/4	-	14
DPL21-1	4/0 Str.	1	1	1 5/8	1 1/4	9/16	3 11/32	9/64	5/8		-	15
DPL21-2	4/0 Str.	2	1	1 5/8	1 13/16	7/16	4 1/32	9/64	3/8	1	-	15
DPL21-2N	4/0 Str.	2	1	1 5/8	3 1/16	9/16	5 9/32	9/64	5/8	1 3/4	-	15
DPL21-38	4/0 Str.	1	1	1 5/8	1	7/16	3 3/32	9/64	7/16	-	-	15
DPL21-62	4/0 Str.	1	1	1 5/8	1 1/4	21/32	3 7/8	9/64	5/8	-	-	15
DPL25-1	250 MCM	1	1 3/32	1 5/8	1 1/4	9/16	3 11/32	5/32	5/8	-	-	16
DPL25-2	250 MCM	2	1 3/32	1 5/8	1 13/16	7/16	4 1/32	5/32	3/8	1	-	16
DPL25-2N	250 MCM	2	1 3/32	1 5/8	3 1/16	9/16	5 9/32	5/32	5/8	1 3/4	-	16
DPL25-38	250 MCM	1	1 3/32	1 5/8	1	7/16	3 3/32	5/32	7/16	-	-	16
DPL30-1	300 MCM	1	1 3/16	2	1	9/16	3 3/4	5/32	5/8	-	-	17
DPL30-2	300 MCM	2	2	2	2	9/16	4 1/2	5/32	3/8	1 1/16	-	17
DPL30-2N	300 MCM	2	1 3/16	2	3	9/16	5 11/16	5/32	5/8	1 3/4	-	17
DPL30-31	300 MCM	1	1 3/16	2	3/4	11/32	3 3/8	5/32	11/32	-	-	17
DPL30-38	300 MCM	1	1 3/16	2	13/16	7/16	3 7/16	5/32	3/8	-	-	17

continued →

© 2011, AFL, all rights reserved. PP-3-00316, Revision 3, 3.28.2023
Specifications are subject to change without notice.

DOSSERT®

TYPE DPL, DPLA-45, DPLA-90
Copper Long Barrel Compression Terminal

Ordering Information

CATALOG NUMBER	CABLE SIZE	FIG. NO.	DIMENSIONS IN INCHES									DIE INDEX
			A	B	C	H	L	T	X	Y	Z	
DPL35-1	350 MCM	1	1 9/32	2	1 1/4	9/16	3 13/16	11/64	5/8	-	-	18
DPL35-2	350 MCM	2	1 9/32	2	1 7/8	7/16	4 9/16	11/64	3/8	1 1/16	-	18
DPL35-2N	350 MCM	2	1 9/32	2	3 3/16	9/16	5 3/4	11/64	5/8	1 3/4	-	18
DPL35-38	350 MCM	1	1 9/32	2	13/16	7/16	3 3/8	11/64	3/8	-	-	18
DPL40-1	400 MCM	1	1 3/8	2 1/8	1 3/8	11/16	4 1/8	3/16	21/32	-	-	19
DPL40-2	400 MCM	2	1 3/8	2 1/8	2	7/16	4 3/4	3/16	7/16	1 1/16	-	19
DPL40-2N	400 MCM	2	1 3/8	2 1/8	3 1/16	9/16	5 13/16	3/16	5/8	1 3/4	-	19
DPL40-38	400 MCM	1	1 3/8	2 1/8	15/16	7/16	3 11/16	3/16	7/16	-	-	19
DPL40-50	400 MCM	1	1 3/8	2 1/8	1 1/4	9/16	3 7/8	3/16	5/8	-	-	19
DPL40-87	400 MCM	1	1 3/8	2 1/8	1 7/8	29/32	4 5/8	3/16	7/8	-	-	19
DPL50-1	500 MCM	1	1 17/32	2 1/4	1 3/8	11/16	4 15/32	7/32	21/32	-	-	20
DPL50-2	500 MCM	2	1 17/32	2 1/4	2	7/16	5 3/32	7/32	7/16	1 1/16	-	20
DPL50-2N	500 MCM	2	1 17/32	2 1/4	3 1/16	9/16	6 5/32	7/32	5/8	1 3/4	-	20
DPL50-50	500 MCM	1	1 17/32	2 1/4	1 1/4	9/16	4 7/32	7/32	5/8	-	-	20
DPL50-87	500 MCM	1	1 17/32	2 1/4	1 7/8	29/32	4 31/32	7/32	7/8	-	-	20
DPL60-1	600 MCM	1	1 23/32	2 11/16	1 13/16	11/16	5 19/32	17/64	7/8	-	-	22
DPL60-2	600 MCM	2	1 23/32	2 11/16	2 1/16	7/16	5 27/32	17/64	7/16	1 1/8	-	22
DPL60-2N	600 MCM	2	1 23/32	2 11/16	3 1/16	9/16	6 29/32	17/64	5/8	1 3/4	-	22
DPL60-50	600 MCM	1	1 23/32	2 11/16	1 1/4	9/16	5 1/32	17/64	5/8	-	-	22
DPL70-1	700 MCM	1	1 27/32	1 5/8	1 7/8	11/16	4	17/64	7/8	-	-	
DPL70-2N	700 MCM	2	1 27/32	2 7/8	3 1/8	9/16	7	17/64	5/8	1 3/4	-	
DPL75-1	750 MCM	1	1 7/8	2 7/8	1 7/8	11/16	5 23/32	17/64	7/8	-	-	24
DPL75-2	750 MCM	2	1 7/8	2 7/8	2 1/4	7/16	6 3/32	17/64	1/2	1 1/8	-	24
DPL75-2N	750 MCM	2	1 7/8	2 7/8	3 1/8	9/16	6 31/32	17/64	5/8	1 3/4	-	24
DPL75-50	750 MCM	1	1 7/8	2 7/8	1 1/4	9/16	5 15/32	17/64	5/8	-	-	24
DPL75-87	750 MCM	1	1 7/8	2 7/8	1 7/8	29/32	5 23/32	17/64	7/8	-	-	24
DPL80-1	800 MCM	1	1 15/16	2 15/16	2	11/16	5 13/16	9/32	15/16	-	-	25
DPL80-2	300 MCM	2	1 15/16	2 15/16	2 1/4	7/16	6 3/16	9/32	1/2	1 1/8	-	25
DPL80-2N	800 MCM	2	1 15/16	2 15/16	3 1/8	9/16	7 1/16	9/32	5/8	1 3/4	-	25
DPL100-1	1000 MCM	1	2 5/32	3	2	11/16	6 3/8	21/64	15/16	-	-	27
DPL100-2	1000 MCM	2	2 5/32	3	2 1/2	9/16	6 5/8	21/64	9/16	1 1/4	-	27
DPL100-2N	1000 MCM	2	2 5/32	3	3 1/8	9/16	7 1/4	21/64	5/8	1 3/4	-	27
DPL100-4	1000 MCM	3	2 5/32	3	2 1/4	7/16	6 3/8	21/64	1/2	1 1/8	1 1/8	27
DPL125-1	1250 MCM	1	2 7/16	3 3/16	2 1/4	11/16	6 5/8	11/32	1 1/16	-	-	29
DPL125-2N	1250 MCM	2	2 7/16	3 3/16	3 1/8	9/16	7 1/2	11/32	5/8	1 3/4	1 3/4	29
DPL150-1	1500 MCM	1	2 11/16	3 3/16	2 3/8	13/16	7 1/4	25/64	1 1/8	-	-	31
DPL150-2	1500 MCM	2	2 11/16	3 3/16	2 5/8	9/16	7 1/2	25/64	9/16	1 3/8	1 3/8	31
DPL150-2N	1500 MCM	2	2 11/16	3 3/16	3 1/8	9/16	7 13/16	25/64	5/8	1 3/4	1 3/4	31
DPL150-4	1500 MCM	3	2 11/16	3 3/16	2 5/8	9/16	7 1/2	25/64	9/16	1 3/8	1 3/8	31
DPL150-4N	1500 MCM	3	2 11/16	3 3/16	3 1/8	9/16	7 13/16	25/64	5/8	1 3/4	1 3/4	31
DPL200-1	2000 MCM	1	3 5/64	3 7/16	2 1/2	13/16	7 3/8	15/32	1 3/16	-	-	34
DPL200-2	2000 MCM	2	3 5/64	3 7/16	2 3/4	9/16	7 5/8	15/32	9/16	1 1/2	1 1/2	34
DPL200-2N	2000 MCM	2	3 5/64	3 7/16	3 1/8	9/16	8	15/32	5/8	1 3/4	1 3/4	34
DPL200-4	2000 MCM	3	3 5/64	3 7/16	2 3/4	9/16	7 5/8	15/32	9/16	1 1/2	1 1/2	34
DPL200-4N	2000 MCM	3	3 5/64	3 7/16	3 1/8	9/16	8	15/32	5/8	1 3/4	1 3/4	34

For information on installation tools, refer to pages 246 and 247 of AFL's Substation catalog.

© 2011, AFL, all rights reserved. PP-3-00316, Revision 3, 3.28.2023
Specifications are subject to change without notice.

DOSSERT®

TYPE DPLE-N

Copper Heavy Duty Terminal For Cable

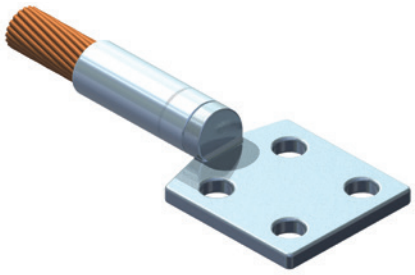

A compression terminal lug designed to provide the necessary pad width for NEMA two-hole and four-hole standard drilling. The barrel element is made of high conductivity copper specially bonded to the cast copper alloy body. Competely tin plated for maximum resistance to corrosion. All sizes are designed to indentations in cable socket.

Material

Tin-plated Copper Alloy

Notes

- Add suffix (F) to catalog number for pad to be machined on both sides. Ex:DPLE150-4NF
- For an angled pad, add the desired angle to the catalog number: Ex: DPLE100-2N-15

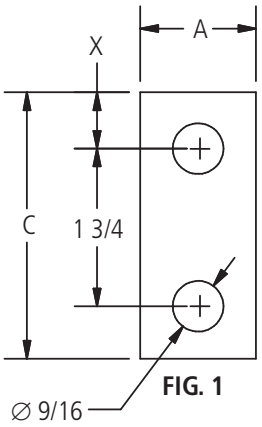

FIG. 1

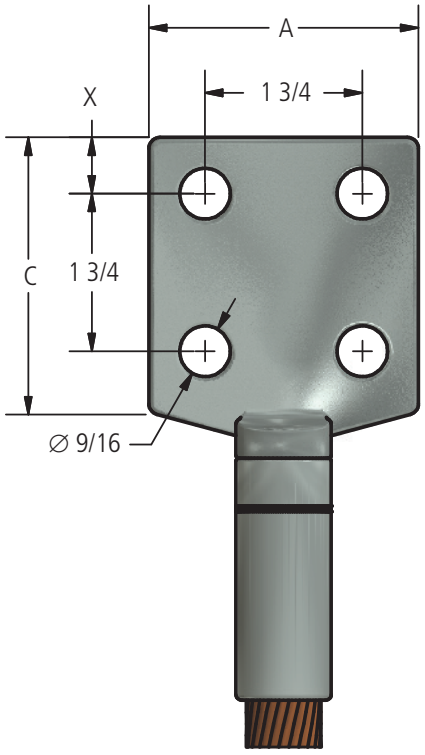

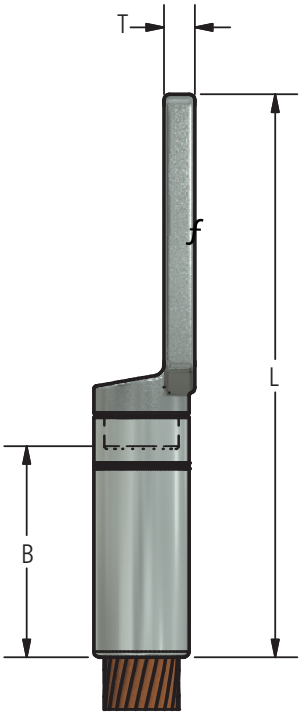

FIG. 2

© 2011, AFL, all rights reserved. PP-3-00318, Revision 4, 3.27.2023
Specifications are subject to change without notice.

DOSSERT®

TYPE DPLE-N

Copper Heavy Duty Terminal For Cable

Ordering Information

CATALOG NUMBER	CABLE SIZE	FIG. NO.	DIMENSIONS IN INCHES					
			A	B	C	L	T	X
DPLE2-2N	6 Str	1	1	1 1/4	3	4 5/8	3/16	5/8
DPLE4-2N	4 Str	1	1	1 1/4	3	4 5/8	3/16	5/8
DPLE6-2N	2 Str	1	1 1/8	1 3/8	3	4 3/4	7/32	5/8
DPLE8-2N	1 Str	1	1 1/8	1 1/2	3	5	7/32	5/8
DPLE10-2N	1/0 Str	1	1 1/4	1 1/2	3	5	1/4	5/8
DPLE13-2N	2/0 Str	1	1 1/4	2 1/8	3	5 3/4	1/4	5/8
DPLE17-2N	3/0 Str	1	1 1/4	2 1/8	3	5 3/4	1/4	5/8
DPLE17-4N	3/0 Str	2	3	2 1/8	3	5 3/4	1/4	5/8
DPLE21-2N	4/0 Str	1	1 1/4	2 1/8	3	5 3/4	7/32	5/8
DPLE21-4N	4/0 Str	2	3	2 1/8	3	5 25/32	1/4	5/8
DPLE21-4N4	4/0 Str	2	4	2 3/32	4	6 25/32	11/32	1 1/8
DPLE25-2N	250 MCM	1	1 1/4	2 1/8	3	5 11/16	5/16	5/8
DPLE25-4N	250 MCM	2	3	2 1/8	3	5 11/16	5/16	5/8
DPLE30-2N	300 MCM	1	1 3/8	2 1/8	3	6 1/16	5/16	5/8
DPLE30-4N	300 MCM	2	3	2 1/8	3	6 1/16	5/16	5/8
DPLE35-2N	350 MCM	1	1 3/8	2 1/4	3	6 3/16	5/16	5/8
DPLE35-4N	350 MCM	2	3	2 1/4	3	6 3/16	5/16	5/8
DPLE40-2N	400 MCM	1	1 1/2	2 1/4	3	6 1/4	5/16	5/8
DPLE40-4N	400 MCM	2	3	2 1/4	3	6 1/4	5/16	5/8
DPLE50-2N	500 MCM	1	1 1/2	2 1/4	3	6 1/4	11/32	5/8
DPLE50-4N	500 MCM	2	3	2 5/16	3	6 1/4	1/4	5/8
DPLE50-4N4	500 MCM	2	4	2 5/16	4	7 3/8	11/32	1 1/8
DPLE60-2N	600 MCM	1	1 3/4	2 3/4	3	6 3/4	3/8	5/8
DPLE60-4N	600 MCM	2	3	2 3/4	3	6 3/4	3/8	5/8
DPLE65-2N	650 MCM	1	1 3/4	2 7/8	3	6 7/8	3/8	5/8
DPLE75-2N	750 MCM	1	1 3/4	3	3	7	3/8	5/8
DPLE75-4N	750 MCM	2	3	3	3	6 15/16	3/8	5/8
DPLE75-4N4	750 MCM	2	4	3	4	8	3/8	1 1/8
DPLE80-2N	800 MCM	1	1 3/4	3	3	7 1/8	3/8	5/8
DPLE80-4N	800 MCM	2	3	3	3	7 1/8	1/2	5/8
DPLE100-2N	1000 MCM	1	2	3	3	7 1/8	7/16	5/8
DPLE100-4N	1000 MCM	2	3	3	3	7 1/8	7/16	5/8
DPLE100-4N4	1000 MCM	2	4	3 3/8	4	8	3/8	1 1/8
DPLE125-2N	1250 MCM	1	2	3 1/4	3	7 5/8	1/2	5/8
DPLE125-4N	1250 MCM	2	3	3 1/4	3	7 5/8	1/2	5/8
DPLE150-2N	1500 MCM	1	2 5/8	3 1/4	3	7 3/4	9/16	5/8
DPLE150-4N	1500 MCM	2	3	3 1/4	3	7 3/4	9/16	5/8
DPLE150-4N4	1500 MCM	2	4	3 1/4	4	8 3/4	9/16	1 1/8
DPLE175-4N	1750 MCM	2	3	3 3/8	3	8	9/16	5/8
DPLE175-4N4	1750 MCM	2	4	3 3/8	4	9	9/16	1 1/8
DPLE200-2N	2000 MCM	1	2 3/4	3 3/8	3	7 3/4	5/8	5/8
DPLE200-4N	2000 MCM	2	3	3 3/8	3	7 3/4	5/8	5/8
DPLE200-4N4	2000 MCM	2	4	3 3/8	4	8 3/4	5/8	1 1/8

For information on installation tools refer to pages 246 and 247.

© 2011, AFL, all rights reserved. PP-3-00318, Revision 4, 3.27.2023
Specifications are subject to change without notice.

DOSSERT®

TYPE DPLS

Copper Short Barrel Terminal

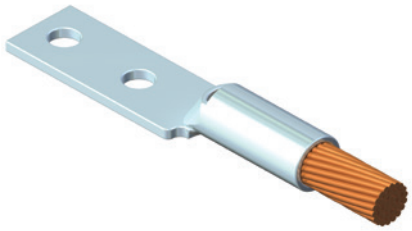

For connecting cable to flat contact. A short barrel compression terminal lug for a complete range of cable sizes from 6 str. to 2000 MCM. The short barrel feature enables terminal to be installed where space is at a minimum. An inspection aperture insures full insertion of cable. A generous entrance chamfer facilitates cable insertion. NEMA standard drilling and stud or screw spacing are identified by the letter "N" suffixed to catalog number.

Material

Tin plated copper alloy

Note

Terminal pads can be drilled to custom hole sizes and spacing. Angled pads also available, please contact the factory.

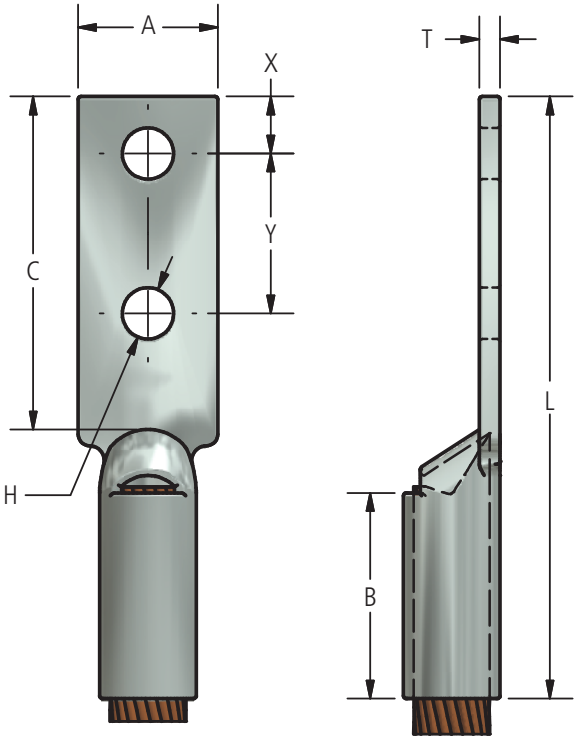

FIG. 1

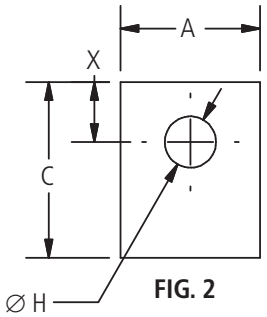

FIG. 2

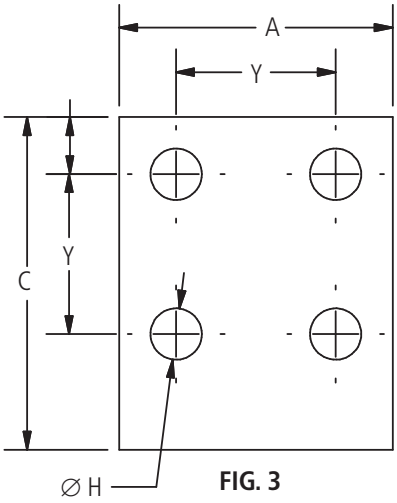

FIG. 3

© 2011, AFL, all rights reserved. PP-3-00319, Revision 2, 3.28.2023
Specifications are subject to change without notice.

DOSSERT®

TYPE DPLS
Copper Short Barrel Terminal

Ordering Information

CATALOG NUMBER	CABLE SIZE	FIG. NO.	DIMENSIONS IN INCHES								DIE INDEX
			A	B	C	H	L	T	X	Y	
DPLS2-18	6 Str.	2	7/16	13/16	1/2	7/32	1 13/32	5/64	7/32	-	7
DPLS2-1	6 Str.	2	7/16	13/16	11/16	9/32	1 19/32	5/64	5/16	-	7
DPLS2-31	6 Str.	2	19/32	13/16	3/4	11/32	1 21/32	3/64	11/32	-	7
DPLS2-38	6 Str.	2	19/32	13/16	13/16	13/32	1 23/32	3/64	3/8	-	7
DPLS2-2	6 Str.	1	7/16	13/16	1 5/16	9/32	2 7/32	5/64	5/16	5/8	7
DPLS4-18	4 Str.	2	1/2	13/16	1/2	7/32	1 1/2	3/32	7/32	-	8
DPLS4-1	4 Str.	2	1/2	13/16	11/16	9/32	1 11/16	3/32	5/16	-	8
DPLS4-31	4 Str.	2	19/32	13/16	3/4	11/32	1 3/4	1/16	11/32	-	8
DPLS4-38	4 Str.	2	19/32	13/16	13/16	13/32	1 13/16	1/16	3/8	-	8
DPLS4-2	4 Str.	1	1/2	13/16	1 5/16	9/32	2 5/16	3/32	5/16	5/8	8
DPLS6-25	2 Str.	2	5/8	7/8	11/16	9/32	1 25/32	3/32	5/16	-	10
DPLS6-1	2 Str.	2	5/8	7/8	3/4	11/32	1 27/32	3/32	11/32	-	10
DPLS6-38	2 Str.	2	5/8	7/8	13/16	13/32	1 29/32	3/32	3/8	-	10
DPLS6-2	2 Str.	1	5/8	7/8	1 1/2	11/32	2 19/32	3/32	11/32	3/4	10
DPLS6-2N	2 Str.	1	13/16	7/8	3 1/16	9/16	4 3/8	5/64	5/8	1 3/4	10
DPLS8-25	1 Str.	2	11/16	7/8	3/4	9/32	1 29/32	3/32	11/32	-	11
DPLS8-1	1 Str.	2	11/16	7/8	3/4	11/32	1 29/32	3/32	11/32	-	11
DPLS8-38	1 Str.	2	11/16	7/8	13/16	13/32	1 31/32	3/32	3/8	-	11
DPLS8-2	1 Str.	1	11/16	7/8	1 5/8	11/32	2 25/32	3/32	11/32	7/8	11
DPLS10-25	1/0 Str.	2	3/4	7/8	11/16	9/32	1 13/16	7/64	5/16	-	12
DPLS10-1	1/0 Str.	2	3/4	7/8	3/4	11/32	1 7/8	7/64	11/32	-	12
DPLS10-38	1/0 Str.	2	3/4	7/8	13/16	13/32	1 15/16	7/64	3/8	-	12
DPLS10-50	1/0 Str.	2	3/4	7/8	1 1/16	17/32	2 3/16	3/32	1/2	-	12
DPLS10-2	1/0 Str.	1	13/16	7/8	1 5/8	11/32	2 3/4	7/64	11/32	7/8	12
DPLS10-2N	1/0 Str.	1	13/16	7/8	3 1/16	9/16	4 3/16	3/32	5/8	1 3/4	12
DPLS10-2-31	1/0 Str.	1	13/16	7/8	1 15/16	11/32	2 15/16	3/32	3/8	1	12
DPLS13-25	2/0 Str.	2	13/16	15/16	11/16	9/32	1 31/32	1/8	5/16	-	13
DPLS13-31	2/0 Str.	2	13/16	15/16	3/4	11/32	2 1/32	1/8	11/32	-	13
DPLS13-1	2/0 Str.	2	13/16	15/16	13/16	13/32	2 3/32	1/8	3/8	-	13
DPLS13-50	2/0 Str.	2	13/16	15/16	1 1/16	17/32	2 11/32	1/8	1/2	-	13
DPLS13-2	2/0 Str.	1	13/16	15/16	1 5/8	11/32	2 29/32	1/8	11/32	7/8	13
DPLS13-2N	2/0 Str.	1	13/16	15/16	3 1/16	9/16	4 11/32	1/8	5/8	1 3/4	13
DPLS17-25	3/0 Str.	2	29/32	1	11/16	9/32	2	9/64	5/16	-	14
DPLS17-31	3/0 Str.	2	29/32	1	3/4	11/32	2 1/16	9/64	11/32	-	14
DPLS17-38	3/0 Str.	2	29/32	1	13/16	13/32	2 1/8	9/64	3/8	-	14
DPLS17-1	3/0 Str.	2	29/32	1	1 1/16	17/32	2 3/8	9/64	1/2	-	14
DPLS17-2N	3/0 Str.	1	29/32	1	3 1/16	9/16	4 3/8	9/64	5/8	1 3/4	14
DPLS17-2	3/0 Str.	1	29/32	1	1 13/16	13/32	3 9/32	9/64	3/8	1	14
DPLS21-25	4/0 Str.	2	1	1	11/16	9/32	2 1/32	9/64	5/16	-	15
DPLS21-31	4/0 Str.	2	1	1	3/4	11/32	2 3/32	9/64	11/32	-	15
DPLS21-38	4/0 Str.	2	1	1	13/16	13/32	2 5/32	9/64	3/8	-	15
DPLS21-1	4/0 Str.	2	1	1	1 1/16	17/32	2 13/32	9/64	1/2	-	15
DPLS21-2	4/0 Str.	1	1	1	1 13/16	7/16	3 3/32	9/64	3/8	1	15
DPLS21-2N	4/0 Str.	1	1	1	3 1/16	9/16	4 13/32	9/64	5/8	1 3/4	15
DPLS21-2-31	4/0 Str.	1	1	1	2 1/8	11/32	3 3/8	9/64	9/16	1	15
DPLS25-25	250 MCM	2	1 3/32	1 1/16	11/16	9/32	2 1/8	5/32	5/16	-	16
DPLS25-31	250 MCM	2	1 3/32	1 1/16	3/4	11/32	2 3/16	5/32	11/32	-	16
DPLS25-38	250 MCM	2	1 3/32	1 1/16	13/16	13/32	2 1/4	5/32	3/8	-	16
DPLS25-1	250 MCM	2	1 3/32	1 1/16	1 1/16	17/32	2 1/2	5/32	1/2	-	16
DPLS25-2	250 MCM	1	1 3/32	1 1/16	1 7/8	7/16	3 5/16	5/32	3/8	1 1/16	16
DPLS25-2N	250 MCM	1	1 3/32	1 1/16	3 1/16	9/16	4 1/2	5/32	5/8	1 3/4	16
DPLS30-31	300 MCM	2	1 3/16	1 1/16	3/4	3/8	2 7/32	5/32	11/32	-	17
DPLS30-38	300 MCM	2	1 3/16	1 1/16	13/16	7/16	2 9/32	5/32	3/8	-	17
DPLS30-1	300 MCM	2	1 3/16	1 1/16	1 1/8	9/16	2 19/32	5/32	17/32	-	17
DPLS30-62	300 MCM	2	1 3/16	1 1/16	2	11/16	3 15/32	5/32	15/16	-	17
DPLS30-2	300 MCM	1	1 3/16	1 1/16	1 7/8	7/16	3 11/32	5/32	3/8	1 1/16	17
DPLS30-2N	300 MCM	1	1 3/16	1 1/16	3 1/16	9/16	4 17/32	5/32	5/8	1 3/4	17
DPLS35-1	350 MCM	2	1 9/32	1 1/8	1 1/8	9/16	2 11/16	11/64	17/32	-	18
DPLS35-62	350 MCM	2	1 9/32	1 1/8	2	11/16	3 9/16	11/64	15/16	-	18
DPLS35-2	350 MCM	1	1 9/32	1 1/8	1 7/8	7/16	3 7/16	11/64	3/8	1 1/16	18
DPLS35-2N	350 MCM	1	1 9/32	1 1/8	3 1/16	9/16	4 5/8	11/64	5/8	1 3/4	18
DPLS40-50	400 MCM	2	1 3/8	1 3/16	1 1/8	9/16	2 3/4	3/16	17/32	-	19

© 2011, AFL, all rights reserved. PP-3-00319, Revision 2, 3.28.2023
Specifications are subject to change without notice.

DOSSERT®

TYPE DPLS
Copper Short Barrel Terminal

Ordering Information

CATALOG NUMBER	CABLE SIZE	FIG. NO.	DIMENSIONS IN INCHES								DIE INDEX
			A	B	C	H	L	T	X	Y	
DPLS40-1	400 MCM	2	1 3/8	1 3/16	1 3/8	11/16	3	3/16	21/32	-	19
DPLS40-2	400 MCM	1	1 3/8	1 3/16	2	7/16	3 5/8	3/16	7/16	1 1/16	19
DPLS40-2N	400 MCM	1	1 3/8	1 3/16	3 1/16	9/16	4 11/16	3/16	5/8	1 3/4	19
DPLS50-50	500 MCM	2	1 17/32	1 3/8	1 3/16	9/16	3 3/16	7/32	5/8	-	20
DPLS50-1	500 MCM	2	1 17/32	1 3/8	1 3/8	11/16	3 3/8	7/32	21/32	-	20
DPLS50-2	500 MCM	1	1 17/32	1 3/8	2	7/16	4	7/32	7/16	1 1/16	20
DPLS50-2N	500 MCM	1	1 17/32	1 3/8	3 1/16	9/16	5 1/16	7/32	5/8	1 3/4	20
DPLS60-1	600 MCM	2	1 11/16	1 3/8	1 3/4	11/16	3 3/4	17/64	7/8	-	22
DPLS60-2	600 MCM	1	1 11/16	1 3/8	2	9/16	4	17/64	7/16	1 1/16	22
DPLS60-2N	600 MCM	1	1 11/16	1 3/8	3 1/16	7/16	5 1/16	17/64	5/8	1 3/4	22
DPLS75-1	750 MCM	2	1 7/8	1 5/8	1 7/8	11/16	4 1/8	17/64	7/8	-	24
DPLS75-2N	750 MCM	1	1 7/8	1 5/8	3 1/8	9/16	5 3/8	17/64	5/8	1 3/4	24
DPLS80-1	800 MCM	2	1 7/8	1 5/8	2	11/16	4 1/2	9/32	15/16	-	25
DPLS80-2N	800 MCM	1	1 7/8	1 5/8	3 1/8	9/16	5 5/8	9/32	5/8	1 3/4	25
DPLS100-1	1000 MCM	2	2 5/32	1 7/8	2	11/16	4 15/16	21/64	15/16	-	27
DPLS100-2N	1000 MCM	1	2 5/32	1 7/8	3 1/8	9/16	6 1/16	21/64	5/8	1 3/4	27
DPLS100-4	1000 MCM	3	2 5/32	1 7/8	2 1/4	7/16	5 3/16	21/64	1/2	1 1/8	27
DPLS150-1	1500 MCM	2	2 11/16	2	2 3/8	11/16	6 5/16	25/64	1 1/8	-	31
DPLS150-2	1500 MCM	1	2 11/16	2	2 5/8	9/16	7 1/16	25/64	9/16	1 3/8	31
DPLS150-2N	1500 MCM	1	2 11/16	2	3 1/8	9/16	6 9/16	25/64	5/8	1 3/4	31
DPLS150-4	1500 MCM	3	2 11/16	2	2 5/8	9/16	6 9/16	25/64	9/16	1 3/8	31
DPLS200-1	2000 MCM	2	3 5/64	2 1/4	2 1/2	13/16	6 1/2	15/32	1 13/16	-	34
DPLS200-2N	2000 MCM	1	3 5/64	2 1/4	3 1/8	9/16	7 1/8	15/32	5/8	1 3/4	34
DPLS200-4	2000 MCM	3	3 5/64	2 1/4	2 3/4	9/16	6 3/4	15/32	9/16	1 1/2	34
DPLS200-4N	2000 MCM	3	3 5/64	2 1/4	3 1/8	9/16	7 1/8	15/32	5/8	1 3/4	34

For information on installation tools refer to pages 246 and 247.

© 2011, AFL, all rights reserved. PP-3-00319, Revision 2, 3.28.2023
Specifications are subject to change without notice.

DOSSERT®

TYPE DPR
Copper Reducing Coupler

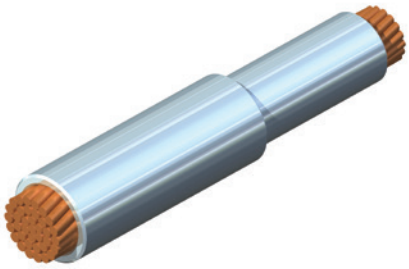

A Seamless reducing coupler for splicing two different sized cables end-to-end. The larger cable is inserted first and stops against the center of the connector where the small diameter portion begins. This insures that both conductors are at the proper depth before crimping. Entrance chamfers are provided to aid in cable insertion. Accepting a wide range of cable diameters, connectors are stamped with full catalog numbers and conductor sizes for quick identification.

Material

Tin plated copper alloy

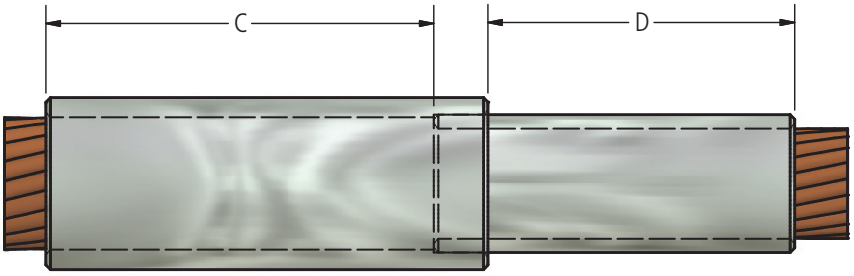

© 2011, AFL, all rights reserved. PP-3-00320, Revision 1, 3.28.2023
Specifications are subject to change without notice.

DOSSERT®

TYPE DPR
Copper Reducing Coupler

Ordering Information

CATALOG NUMBER	CABLE SIZE		DIMENSIONS IN INCHES	
	RUN	TAP	C	D
DPR4-2	4 Str.	6 Str.	1 1/8	1 1/4
DPR6-2	2 Str.	6 Str.	1 1/4	1 1/8
DPR6-4	2 Str.	4 Str.	1 1/4	1 1/8
DPR10-2	1/0 Str.	6 Str.	1 3/8	1 1/8
DPR10-4	1/0 Str.	4 Str.	1 3/8	1 1/8
DPR10-6	1/0 Str.	2 Str.	1 3/8	1 1/8
DPR13-2	2/0 Str.	6 Str.	1 1/2	1 1/8
DPR13-4	2/0 Str.	4 Str.	1 1/2	1 1/8
DPR13-6	2/0 Str.	2 Str.	1 1/2	1 1/4
DPR13-10	2/0 Str.	1/0 Str.	1 1/2	1 3/8
DPR21-2	4/0 Str.	6 Str.	1 5/8	1 1/8
DPR21-4	4/0 Str.	4 Str.	1 5/8	1 1/8
DPR21-6	4/0 Str.	2 Str.	1 5/8	1 1/4
DPR21-10	4/0 Str.	1/0 Str.	1 5/8	1 3/8
DPR21-13	4/0 Str.	2/0 Str.	1 5/8	1 1/2
DPR25-4	250 MCM	4 Str.	1 5/8	1 1/8
DPR25-6	250 MCM	2 Str.	1 5/8	1 1/4
DPR25-10	250 MCM	1/0 Str.	1 5/8	1 3/8
DPR25-13	250 MCM	2/0 Str.	1 5/8	1 1/2
DPR25-21	250 MCM	4/0 Str.	1 5/8	1 5/8
DPR35-6	350 MCM	2 Str.	2	1 1/4
DPR35-10	350 MCM	1/0 Str.	2	1 3/8
DPR35-13	350 MCM	2/0 Str.	2	1 1/2
DPR35-21	350 MCM	4/0 Str.	2	1 5/8
DPR35-25	350 MCM	250 MCM	2	1 5/8
DPR50-10	500 MCM	1/0 Str.	2 1/4	1 3/8
DPR50-13	500 MCM	2/0 Str.	2 1/4	1 1/2
DPR50-21	500 MCM	4/0 Str.	2 1/4	1 5/8
DPR50-25	500 MCM	250 MCM	2 1/4	1 5/8
DPR50-35	500 MCM	350 MCM	2 1/14	2
DPR75-13	750 MCM	2/0 Str.	2 7/8	1 1/2
DPR75-21	750 MCM	4/0 Str.	2 7/8	1 5/8
DPR75-25	750 MCM	250 MCM	2 7/8	1 5/8
DPR7-5.35	750 MCM	350 MCM	2 7/8	2
DPR75-50	750 MCM	500 MCM	2 7/8	2 1/4
DPR100-21	1000 MCM	4/0 Str.	3	1 5/8
DPR100-25	1000 MCM	250 MCM	3	1 5/8
DPR100-35	1000 MCM	350 MCM	3	2
DPR100-50	1000 MCM	500 MCM	3	2 1/4
DPR100-75	1000 MCM	750 MCM	3	2 7/8
DPR150-25	1500 MCM	250 MCM	3 1/4	1 5/8
DPR150-35	1500 MCM	350 MCM	3 1/4	2
DPR150-50	1500 MCM	500 MCM	3 1/4	2 1/4
DPR150-75	1500 MCM	750 MCM	3 1/4	2 7/8
DPR150-100	1500 MCM	1000 MCM	3 1/4	3

For information on installation tools refer to pages 246 and 247.

© 2011, AFL, all rights reserved. PP-3-00320, Revision 1, 3.28.2023
Specifications are subject to change without notice.

DOSSERT®

TYPE LCA
Compression Terminal Lug

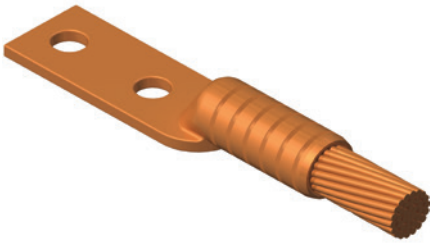

Material
Pure Copper Tubing

Note
- Barrel lined with Silicon Carbide Powder. For a tin plating add suffix 'SN' to catalog number. Available with solder sealing add suffix 'MT' to catalog number.
- For a 3/0 STR cable with a 2 hole terminal pad, tin plated use LCA17-2N-SN.

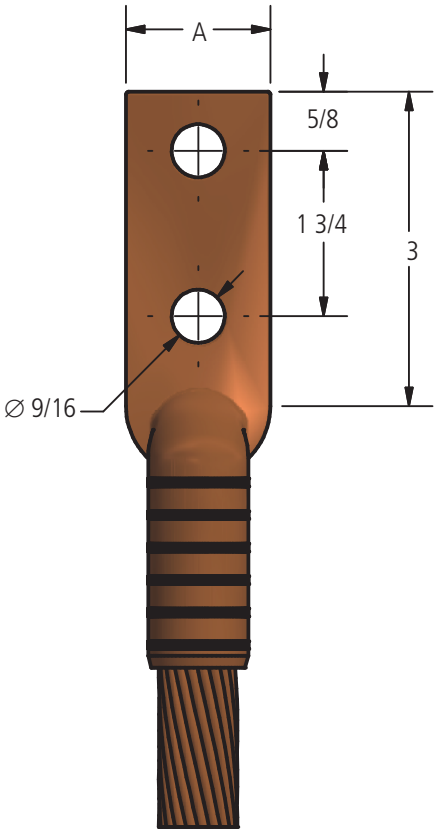

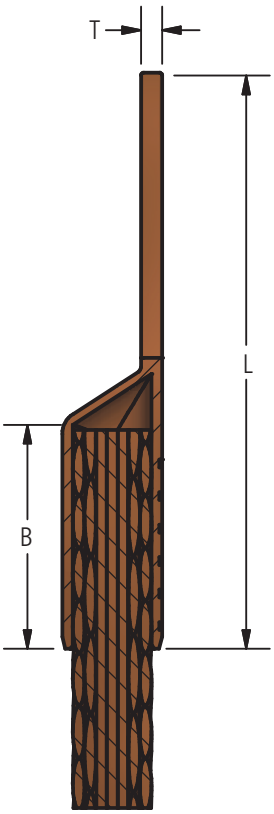

Ordering Information

CATALOG NUMBER	CABLE SIZE	DIMENSIONS IN INCHES			
		A	B	L	T
LCA10-2N	1/0 STR	7/8	1 9/16	5 1/4	7/32
LCA13-2N	2/0 STR	1	1 9/16	5 1/4	1/4
LCA17-2N	3/0 STR	1 1/16	1 9/16	5 3/8	5/16
LCA21-2N	4/0 STR	1 7/32	1 9/16	5 3/8	5/16
LCA25-2N	250 MCM	1 5/16	1 3/4	5 3/8	11/32
LCA30-2N	300 MCM	1 7/16	1 3/4	5 1/2	3/8
LCA35-2N	350 MCM	1 19/32	2 3/4	6 1/2	7/16

© 2011, AFL, all rights reserved. PP-3-00382, Revision 2, 3.28.2023
Specifications are subject to change without notice.

DOSSERT®

TYPE LCAE
Compression Terminal Lug

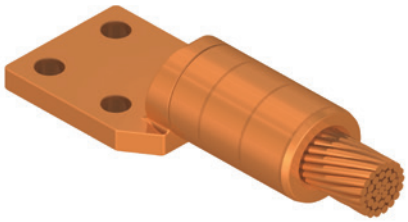

Material
Copper Alloy

Note
- Barrel lined with Silicon Carbide Powder.
- For Tin plating finish add suffix "-SN" to catalog number. Ex: LCAE10-4N-SN

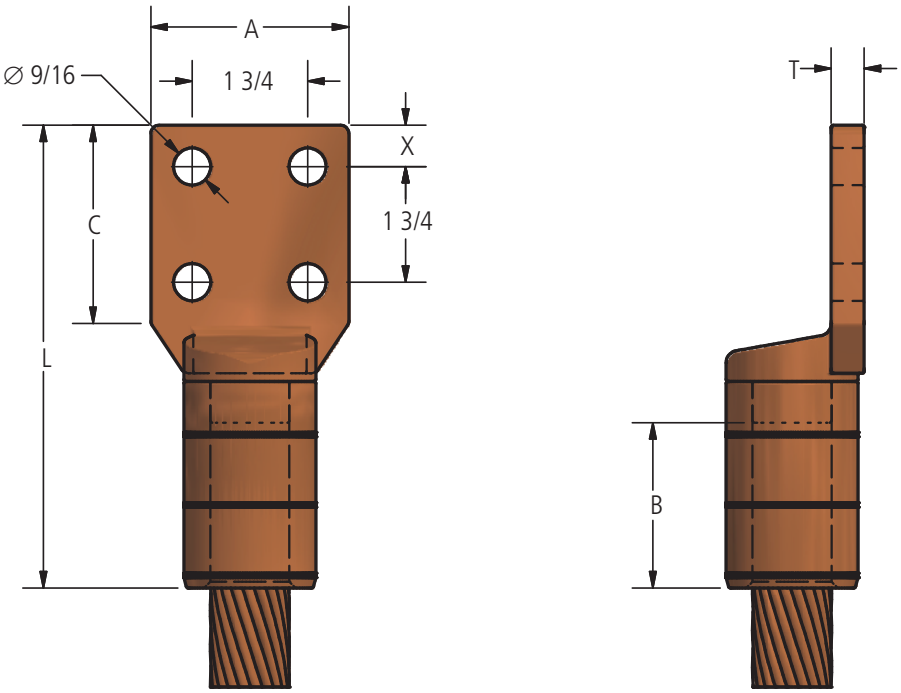

Ordering Information

CATALOG NUMBER	CABLE SIZE	DIMENSIONS IN INCHES					
		A	B	C	L	T	X
LCAE10-4N	1/0 STR	3	1 9/16	3	5 1/4	3/16	5/8
LCAE13-4N	2/0 STR	3	1 9/16	3	5 1/4	1/4	5/8
LCAE17-4N	3/0 STR	3	1 9/16	3	5 3/8	1/4	5/8
LCAE21-4N	4/0 STR	3	1 9/16	3	5 3/8	1/4	5/8
LCAE25-4N	250 MCM	3	1 3/4	3	5 3/8	5/16	5/8
LCAE30-4N	300 MCM	3	1 3/4	3	5 3/4	5/16	5/8
LCAE30-4N4	300 MCM	4	1 3/4	4	6 3/4	5/16	1 1/8

© 2011, AFL, all rights reserved. PP-3-00383, Revision 2, 3.28.2023
Specifications are subject to change without notice.

DOSSERT®

INSTALLATION TOOL REFERENCES

The following tool references list a number of existing tools which can be used to install all connectors listed in catalog whose tabular listing is foot-noted to refer to pages 246 and 247. For any given cable size, irrespective of connector type, the proper tool and dies (if required) can be quickly selected.

AMP TOOLS

TOOL AND DIE NUMBERS

(Bold Type Indicates Tool and Light Type Indicates Dies)
Between Vertical Lines Can Be Found The Desired Tool and Accompanying Die (or Dies) Where Required.

CABLE SIZE	TOOL AND DIE NUMBERS											
6 STR.	**69010**	38923	**69015**	48172	**69012**	37207	**69020**	48127	48128	**69025**	48127	48128
4 Str.	**69015**	48173	**69020**	48127	48129	**69025**	48127	48129	–	–	–	–
2 Str.	**69015**	48174	**69020**	48127	48130	**69025**	48127	48130	–	–	–	–
1 & 1/0 Str.	**69015**	48183	**69020**	48131	48132	**69025**	48131	48132	–	–	–	–
2/0 Str.	**69020**	48131	48133	**69025**	48131	48133	–	–	–	–	–	–
3/0 Str.	**69020**	48131	48134	**69025**	48131	48134	–	–	–	–	–	–
4/0 Str.	**69020**	48131	300430	**69025**	48131	48135	–	–	–	–	–	–

BURNDY TOOLS

TOOL AND DIE NUMBERS

(Bold Type Indicates Tool and Light Type Indicates Dies)
Between Vertical Lines Can Be Found The Desired Tool and Accompanying Die (or Dies) Where Required.

CABLE SIZE	TOOL AND DIE NUMBERS																
6 STR.	**MY29;**	**Y34A**	A6CD	Y34PR	**Y34B**	B6CD	Y34PR	–	–	–	–	–	–	–	–	–	–
4 Str.	**MY29;**	**Y34A**	A4CD	Y34PR	**Y34B**	B4CD	Y34PR	–	–	–	–	–	–	–	–	–	–
3 Str.	**MY29;**	Y34A	A3CD	Y34PR	**Y34B**	B3CD	Y34PR	–	–	–	–	–	–	–	–	–	–
2 Str.	**MY29;**	Y34A	A2CD	Y34PR	**Y34B**	B2CD	Y34PR	–	–	–	–	–	–	–	–	–	–
1 Str.	**MY29;**	Y34A	A1CD	Y34PR	**Y34B**	B1CD	Y34PR	–	–	–	–	–	–	–	–	–	–
1/0 Str.	**MY29;**	Y34A	A25D	Y34PR	**Y34B**	B25D	Y34PR	**Y44B**	E25D	Y44PR	–	–	–	–	–	–	–
2/0 Str.	**MY29;**	Y34A	A26D	Y34PR	**Y34B**	B26D	Y34PR	**Y44B**	E26D	Y44PR	–	–	–	–	–	–	–
3/0 Str.	**MY29;**	Y34A	A27D	Y34PR	**Y34B**	B27D	Y34PR	**Y44B**	E27D	Y44PR	–	–	–	–	–	–	–
4/0 Str.	**MY29T;**	**MY29-3;**	Y34A	A28D	Y34PR	**Y34B**	B28D	Y34PR	Y44B	E28D	Y44PR	Y48B	C28D	Y48PR	**Y486RB**	F28D	Y48PR
250 MCM	**MY29;**	**MY29-3;**	Y34A	A29D	Y34PR	**Y34B**	B29D	Y34PR	Y44B	E29D	Y44PR	Y48B	C29D	Y48PR	**Y486RB**	F29D	Y48PR
300 MCM	**Y34A**	A30D	Y34PR	**Y34B**	B30D	Y34PR	**Y44B**	E30D	Y44PR	**Y48B**	C30D	Y48PR	Y486RB	F30D	Y48PR	–	–
350MCM	**Y34A**	A31D	Y34PR	**Y34B**	B31D	Y34PR	**Y44B**	E31D	Y44PR	**Y48B**	C31D	Y48PR	Y486RB	F31D	Y48PR	–	–
400 MCM	**Y34A**	A32D	Y34PR	**Y34B**	B32D	Y34PR	**Y44B**	E32D	Y44PR	**Y48B**	C32D	Y48PR	Y486RB	F32D	Y48PR	–	–
450 MCM	**Y34A**	A33D	Y34PR	**Y34B**	B33D	Y34PR	**Y44B**	E33D	Y44PR	**Y48B**	C33D	Y48PR	Y486RB	F33D	Y48PR	–	–
500 MCM	**Y34A**	A34D	Y34PR	**Y34B**		Y48PR	**Y44B**	E34D	Y44PR	**Y48B**	C34D	Y48PR	Y486RB	F34D	Y48PR	–	–
550 MCM	**Y44B**	E35D	Y44PR	**Y48B**	C35D	Y48PR	**Y486RB**	F35D	Y48PR	–	–	–	–	–	–	–	–
600 MCM	**Y44B**	E36D	Y44PR	**Y48B**	C36D	Y48PR	**Y486RB**	F36D	Y48PR	–	–	–	–	–	–	–	–
650 MCM	**Y44B**	E37D	Y44PR	**Y48B**	C37D	Y48PR	**Y486RB**	F37D	Y48PR	–	–	–	–	–	–	–	–
700 MCM	**Y44B**	E38D	Y44PR	**Y48B**	C38D	Y48PR	–	–	–	–	–	–	–	–	–	–	–
750 MCM	**Y44B**	E39D	Y44PR	**Y48B**	C39D	Y48PR	**Y486RB**	F39D	Y48PR	–	–	–	–	–	–	–	–
800 MCM	**Y44B**	E40D	Y44PR	**Y48B**	C40D	Y48PR	**Y486RB**	F40D	Y48PR	–	–	–	–	–	–	–	–
850 MCM	**Y44B**	E41D	Y44PR	**Y48B**	C41D	Y48PR	**Y486RB**	F41D	Y48PR	–	–	–	–	–	–	–	–
1000 MCM	**Y44B**		Y44PR	**Y48B**	C44D	Y48PR	**Y486RB**	F44D	Y48PR	–	–	–	–	–	–	–	–
1250 MCM	**Y48B**	C45D	Y48PR	**Y486RB**	F45D	Y48PR	–	–	–	–	–	–	–	–	–	–	–
1300 MCM	**Y48B**	C453D	Y48PR	**Y486RB**	F453D	Y48PR	–	–	–	–	–	–	–	–	–	–	–
1500 MCM	**Y48B**	C46D	Y48PR	**Y486RB**	F46D	Y48PR	–	–	–	–	–	–	–	–	–	–	–
1750 MCM	**Y48B**	C47D	Y48PR	**Y486RB**	F47D	Y48PR	–	–	–	–	–	–	–	–	–	–	–
2000 MCM	**Y48B**	C48D	Y48PR	**Y486RB**	F48D	Y48PR	–	–	–	–	–	–	–	–	–	–	–

© 2011, AFL, all rights reserved. PP-3-00032, Revision 2, 3.28.2023
Specifications are subject to change without notice.

DOSSERT®
INSTALLATION TOOL REFERENCES

T & B TOOLS
TOOL AND DIE NUMBERS

(Bold Type Indicates Tool and Light Type Indicates Dies)
Between Vertical Lines Can Be Found The Desired Tool and Accompanying Die (or Dies) Where Required.

CABLE SIZE					
6 STR.	WT115	WT149	21072	21073	11031
4 Str.	WT115	WT149	21072	21073	11031
2 Str.	WT127G2	21073	11031	11015,	21019
1 Str.	WT127G	21073	11031	11015,	21019
1/0 Str.	WT127H	21073	11031	11015,	21019
2/0 Str.	WT127J	21073	11031	11015,	21019
3/0 Str.	WT127K	21073	11031	11015,	21019
4/0 Str.	WT127L	21073	11031	11015,	21019
250 MCM	WT127M	21073	11031	11015,	21019

© 2011, AFL, all rights reserved. PP-3-00032, Revision 2, 3.28.2023
Specifications are subject to change without notice.

Bronze Compression Connectors

DOSSERT®

Table of Contents

230 kV Aluminum Bolted

230 kV Bolted Table of Contents 245
Pictorial Index 247

Bolted Bus Supports

Type 16300, 16500, 16700 251
Type 31400 252
Type CBP-AA 253
Type CSD-AA 254
Type CSP-AA, C2SP-AA 255
Type CVSP-AA 256
Type PB-AA, PBP-AA 257
Type PL-AA 258
Type PLH-AA 259
Type PSC-AA 260
Type PSD-AA, PSD-CH-AA 261
Type PSDC-AA 263
Type PSDCS-AA 264
Type PSG-AA 265
Type PSRE-AA 266
Type PSS-AA, PSS-CH-AA 267
Type PSSR-AA, PSSR-CH-AA 269
Type PSU-AA 270
Type PSV-AA 271
Type SAH-AA, SHH-AA 272
Type SAV-AA, SHV-AA 273
Type XBC-AA 275
Type XBCW-AA 276

Bolted Couplers

Type BCX-AA 277
Type CCV-AA 278
Type CP-AA 279
Type RCV-AA 280
Type RP-AA 281
Type RPCV-AA 282
Type UK-AA 284
Type UKR-AA 285
Type UPK-AA 286
Type XCW-AA 287

Bolted Corona Bells

Type CI-AA 288
Type 16200 289
Type CX-AA 290

Bolted Dead End Clamps

Type DEC-AA, DEC-G-AA 291
Type SEC-A-2U-AA 292
Type SEC-AA, SEC-P-AA 293

Bolted Elbows

Type EP-AA, EP-30-AA, EP-45-AA, EP-60-AA 294

Bolted Bar Clamps and Spacers

Type BS-AA 295
Type DA-AA 296
Type DH-AA 297

Bolted Ground Clamps

Type GA-AA, GAA-AA 298
Type GD-AA 299
Type GF-AA 300
Type GPC-AA 301
Type GS-AA 303
Type GW-AA 304
Type GCHV-AA 305
Type GPH-AA 306
Type GPH-N-AA 307

Bolted Parallel Clamps

Type AC, ACA 308
Type AC100-AA 310
Type PC-AA 311
Type TRV-AA 312
Series 390 and 490 Distribution Parallel Groove Clamps 313
Series 480 Center Bolt Clamps 314
Series 580 U-Bolt Clamps 315
Type UD-AA 316

© 2011, AFL, all rights reserved. PP-3-00132 , Revision 14, 3.30.2023
Specifications are subject to change without notice.

Table of Contents

230 kV Aluminum Bolted

Bolted Stud Connectors

Type SCB-F-N-AA 317
Type SCV-AA 319
Type SCX-AA, S2CX-AA 321
Type SP-AA 322
Type SX-AA, SX-90-AA 323
Type SXLW-SI-AA 325

Bolted Tee and Vee Connectors

Type BAP-AA 326
Type BCV-AA 328
Type BP-AA, BPA-75-AA, BPA-80-AA 330
Type BPCV-AA, BP2CV-AA 332
Type PFTS-AA 335
Type U2T-AA, UUTT-AA 337
Type UPT-AA 339
Type UT-AA, UUT-AA 341
Type VBP-20-AA, VBP-30-AA 344
Type CFTL-AA 346

Bolted Cable Spacers

Type CASV-AA 347
Type CASV-N-AA, CASV-N-90-AA 349

Bolted Terminal Connectors

Type CFTV-AA 351
Type T3CV-AA 353
Type T2CV-AA, T2CVA-30-AA, T2CVA-45-AA, T2CVA-90-AA 355
Type TCV-N-AA, TCVA-15-AA, TCVA-30-AA, TCVA-45-AA, TCVA-90-AA 359
Type TCX-AA 361
Type TP-AA, TPA-30-AA, TPA-45-AA, TPA-60-AA, TPA-90-AA 363
Type TPC-AA 365
Type U2L-AA, U2LA-45-AA, U2LA-90-AA 367
Type UL-AA, ULA-45-AA, ULA-90-AA 368
Type XLW-AA 370
Type XLW-90V-AA, XLWO-AA 372
Type BM Series 374

Bolted Vibration Dampers

Type 1706 Series 375

© 2011, AFL, all rights reserved. PP-3-00132 , Revision 14, 3.30.2023
Specifications are subject to change without notice.

230 kV Aluminum Bolted Bus Supports

	16300, 16500, 16700 SERIES PG. 251
	31400 SERIES PG. 252
	CBP-AA SERIES PG. 253
	CSD-AA SERIES PG. 254
	CSP-AA SERIES PG. 255
	C2SP-AA SERIES PG. 255
	CVSP-AA SERIES PG. 256
	PB-AA SERIES PG. 257
	PBP-AA SERIES PG. 257

	PL-AA SERIES PG. 258
	PLH-AA SERIES PG. 259
	PSC-AA SERIES PG. 260
	PSD-CH-AA SERIES PG. 261
	PSDC-AA SERIES PG. 263
	PSDCS-AA SERIES PG. 264
	PSG-AA SERIES PG. 265
	PSRE-AA SERIES PG. 266
	PSS-AA SERIES PG. 267
	PSS-CH-AA SERIES PG. 267

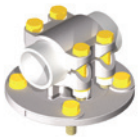	PSSR-AA SERIES PG. 269
	PSU-AA SERIES PG. 270
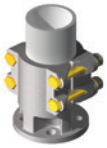	PSV-AA SERIES PG. 271
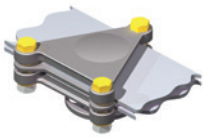	SAH-AA SERIES PG. 272
	SHH-AA SERIES PG. 272
	SAV-AA SERIES PG. 273
	SHV-AA SERIES PG. 273
	XBC-AA SERIES PG. 275
	XBCW-AA SERIES PG. 276

© 2011, AFL, all rights reserved. PP-3-00082, Revision 7, 3.30.2023
Specifications are subject to change without notice.

230 kV or Less Aluminum Bolted

230 kV Aluminum Bolted Couplers



BCX-AA SERIES
PG. 277



CCV-AA SERIES
PG. 278



CP-AA SERIES
PG. 279



RCV-AA SERIES
PG. 280



RP-AA SERIES
PG. 281



RPCV-AA SERIES
PG. 282



UK-AA SERIES
PG. 284



UKR-AA SERIES
PG. 285



UPK-AA SERIES
PG. 286



XCW-AA SERIES
PG. 287

230 kV Aluminum Bolted Corona Bells



CI-AA SERIES
PG. 288



16200 SERIES
PG. 289



CX-AA SERIES
PG. 290

230 kV Aluminum Dead End Clamps



DEC-AA SERIES
PG. 291



DEC-G-AA
PG. 291



SEC-A-2U SERIES
PG. 292



SEC-AA SERIES
PG. 293

230 kV Aluminum Bolted Elbows



EP-AA SERIES
PG. 294



EP-30-AA SERIES
PG. 294

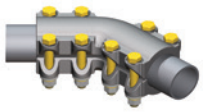

EP-45-AA SERIES
PG. 294

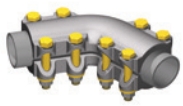

EP-60-AA SERIES
PG. 294

230 kV Aluminum Bolted Bar Clamps And Spacers



BS-AA SERIES
PG. 295

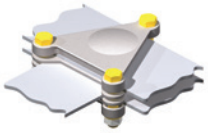

DA-AA SERIES
PG. 296

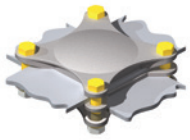

DH-AA SERIES
PG. 297

© 2011, AFL, all rights reserved. PP-3-00082, Revision 7, 3.30.2023
Specifications are subject to change without notice.

230 kV or Less Aluminum Bolted

230 kV Aluminum Bolted Ground Clamps


GA-AA, GAA-AA SERIES
PG. 298


GD-AA SERIES
PG. 299

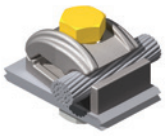
GF-AA SERIES
PG. 300


GPC-AA SERIES
PG. 301


GS-AA SERIES
PG. 303


GW-AA SERIES
PG. 304


GCHV-AA SERIES
PG. 305


GPH-AA SERIES
PG. 306


GPH-N-AA SERIES
PG. 307

230 kV Aluminum Bolted Parallel Clamps


AC, ACA SERIES
PG. 308


AC100-AA SERIES
PG. 310


PC-AA SERIES
PG. 311


TRV-AA SERIES
PG. 312


390, 490 SERIES
PG. 313


480 SERIES
PG. 314


580 SERIES
PG. 315


UD-AA SERIES
PG. 316

230 kV Aluminum Bolted Stud Connectors


SCB-F-N-AA SERIES
PG. 317


SCV-AA SERIES
PG. 319

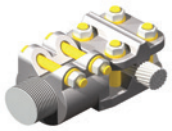
SCX-AA SERIES
PG. 321

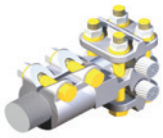
S2CX-AA SERIES
PG. 321


SP-AA SERIES
PG. 322

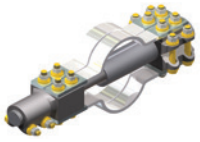
SX-AA SERIES
PG. 323

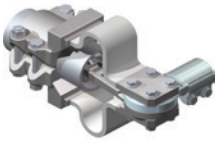
SXLW-SI-AA SERIES
PG. 325

230 kV Aluminum Bolted Tee and Vee Connectors


BAP-AA SERIES
PG. 326


BCV-AA SERIES
PG. 328

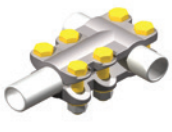
BP-AA, BPA-AA SERIES
PG. 330

© 2011, AFL, all rights reserved. PP-3-00082, Revision 7, 3.30.2023
Specifications are subject to change without notice.

230 kV or Less Aluminum Bolted



BPCV-AA, BP2CV-AA SERIES

PG. 332



PFTS-AA SERIES

PG. 335



U2T-AA, UUTT-AA SERIES

PG. 337



UPT-AA SERIES

PG. 339



UT-AA, UUT-AA SERIES

PG. 341



VBP-AA SERIES

PG. 344



CFTL-AA SERIES

PG. 346

230 kV Aluminum Bolted Cable Spacers



CASV-AA SERIES

PG. 347



CASV-N-AA, CASV-N-90-AA SERIES

PG. 349

230 kV Aluminum Bolted Terminal Connectors



CFTV-AA SERIES

PG. 351



T3CV-AA

PG. 353



T2CV-AA, T2CVA-30-AA, -45, -90 SERIES

PG. 355



TCV-AA, TCVA-15-AA, -30, -45, -90 SERIES

PG. 359



TCX-AA SERIES

PG. 361



TP, TPA-30-AA, -45, -90 SERIES

PG. 363



TPC-AA SERIES

PG. 365



U2L-AA, U2LA-45-AA, -90 SERIES

PG. 367



UL-AA, ULA-45-AA, -90 SERIES

PG. 368

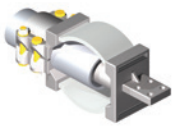

XLW-AA SERIES

PG. 370



XLW-90V-AA, XLWO-AA SERIES

PG. 372



BM SERIES

PG. 374

230 kV Aluminum Bolted Vibration Bampers



1706 SERIES

PG. 375

© 2011, AFL, all rights reserved. PP-3-00082, Revision 7, 3.30.2023
Specifications are subject to change without notice.

230 kV Aluminum Bolted Bus Supports

DOSSERT®

TYPE 16300, 16500, 16700

Cable Support



The 16300, 16500 and 16700 series supports are designed for mounting stranded aluminum or ACSR conductors. New cable support reduces stock with extended range taking capabilities. These supports can be used for two or four conductors and the cables can be oriented in any angle from the base. Three supports provide cable range from 4/0 to 3500 MCM. Available in 3", 5" and 7" bolt circles.

Material

Aluminum Alloy

Hardware

Yellow anodized aluminum nuts, bolts and lockwashers.
Galvanized steel mounting hardware included.

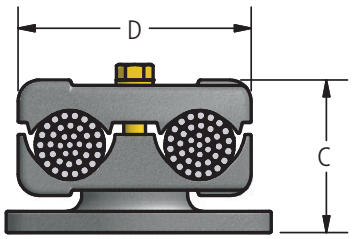

FIG. 1

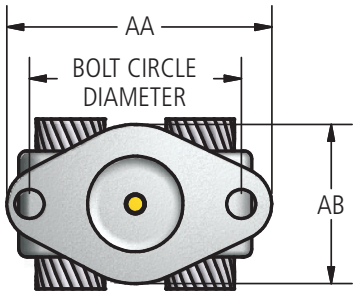

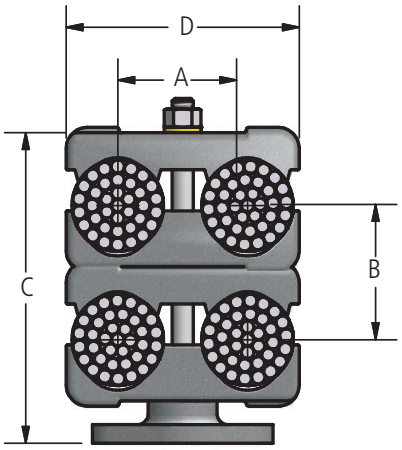

FIG. 2

Ordering Information

NO. OF CABLES	FIG. NO.	AAC CABLE RANGE		CATALOG NUMBER			DIAMETER RANGE	DIMENSIONS IN INCHES						ULTIMATE CANTILEVER FORCE (LBS)
		MIN	MAX	3" BOLT CIRCLE	5" BOLT CIRCLE	7" BOLT CIRCLE	IN.	A	B		C		D	
									MIN	MAX	MIN	MAX		
2	1	4/0	795 MCM	16320-795C	16520-795C	16720-795C	.522 - 1.026	2.40	-	-	3 1/16	3 13/16	4 3/8	600
4	2	4/0	795 MCM	16340-795C	16540-795C	16740-795C	.522 - 1.026	2.40	1 13/16	2 1/2	4 7/8	6 1/4	4 3/8	300
2	1	795 MCM	2000 MCM	16320-2000C	16520-2000C	16720-2000C	1.026 - 1.630	2.40	-	-	3 1/4	4 1/16	4 3/8	600
4	2	795 MCM	2000 MCM	16340-2000C	16540-2000C	16740-2000C	1.026 - 1.630	2.40	2	2 13/16	5 1/4	6 7/8	4 3/8	300
2	1	2000 MCM	3500 MCM	16320-3500C	16520-3500C	16720-3500C	1.630 - 2.158	2.75	-	-	3 7/8	4 1/2	5 1/2	600
4	2	2000 MCM	3500 MCM	16340-3500C	16540-3500C	16740-3500C	1.630 - 2.158	2.75	2 5/8	3 3/16	7 9/16	7 9/16	5 1/2	300

BOLT MOUNTING CIRCLE	DIMENSIONS IN INCHES	
IN	AA	AB
3	4.25	2.50
5	6.25	3.75
7	8.75	3.75

© 2011, AFL, all rights reserved. PP-3-00159, Revision 2, 11.30.18
Specifications are subject to change without notice.

230 kV Aluminum Bolted Bus Supports

DOSSERT®

TYPE 31400

Bus Support Slip Or Fixed

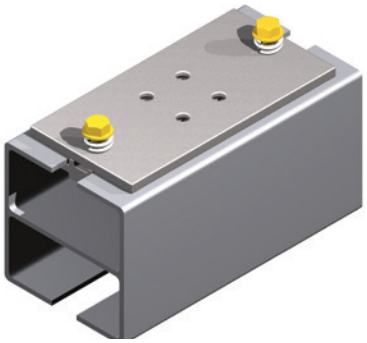

The 31400 Series support is designed to provide reliable mounting for integral web channel bus (IWCB) conductors. Support may be used for tight fit or slip fit applications by rotating keeper. Assembly includes four galvanized steel flat head cap screws for mounting on insulator.

Material

Aluminum Alloy

Hardware

Yellow anodized aluminum bolts, nuts, and lockwashers.
Galvanized steel mounting hardware included.

Ordering Instructions

Step 1: Determine the catalog number based on the IWCB being used and the bolt circle mount (BCM).

Step 2: For slip application, add 'AC'. For Fixed application, leave blank. Ex: A bus support for 4"x 4" IWBC with a 5" BCM for a slip application, the complete catalog number is: 31444-5AC

Step 3: Build Catalog Number
Slip or Fixed Application + Catalog Number

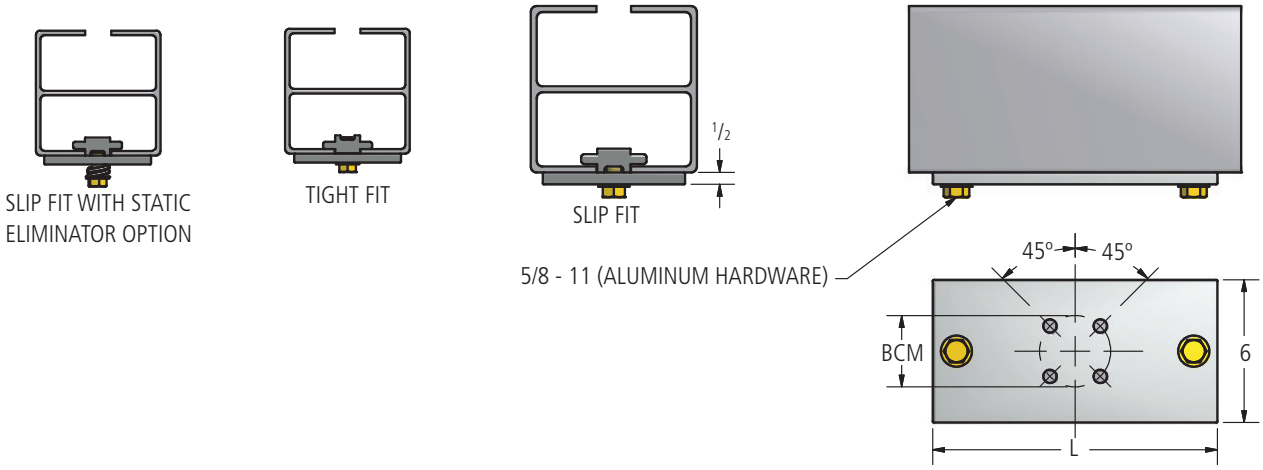

Ordering Information

CONDUCTOR SIZE	CATALOG NUMBER		NOMINAL WEIGHT		DIMENSIONS
IWCB	3" BOLT CIRCLE (76.2 MM)	5" BOLT CIRCLE (127.0 MM)	3" BOLT CIRCLE	5" BOLT CIRCLE	L
IN			LBS	LBS	INCHES
4x4	31444-3	31444-5	6.2	6.3	12
6x4	31464-3	31464-5	6.3	6.4	12
6x5	31465-3	31465-5	7.9	8	12
6x6	31466-3	31466-5	7.2	7.3	12
7x7	31477-3	31477-5	7.2	7.3	12
8x5	31485-3	31485-5	7.2	7.3	12
8x8	31488-3	31488-5	7.2	7.3	12
9x9	31499-3	31499-5	8.3	8.4	12
10x10	B4705-K	B4705-AC	8.67	8.69	16
12x12	B4705-M	B4705-AE	10.1	10.2	18

© 2011, AFL, all rights reserved. PP-3-00172, Revision 2, 7.27.18
Specifications are subject to change without notice.

DOSSERT®

TYPE CBP-AA

Two Unit Bus Support For Cable

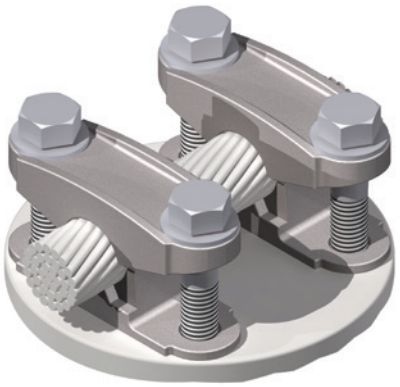

A two unit, four piece cable support which mounts conductor to cap of insulator. A single unit for light service can be supplied on request. Clamp is furnished with cap screws for threading into tapped holes of insulator.

Material

Aluminum Alloy

Hardware

Galvanized steel bolts and lockwashers.

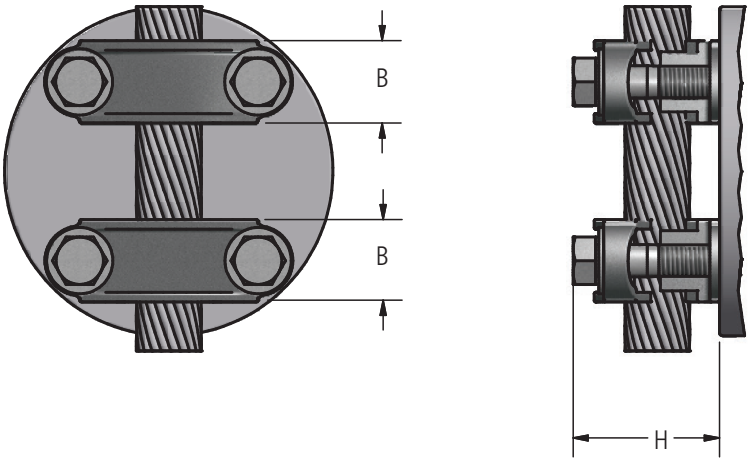

Ordering Information

CATALOG NUMBER	AAC CABLE RANGE		BOLT CIRCLE	DIMENSIONS IN INCHES		
	MIN	MAX		B	H	BOLT SIZE
CBP21-3-AA	2 Stranded	4/0 Stranded	3	1 1/8	1 9/16	1/2
CBP21-5-AA	2 Stranded	4/0 Stranded	5	1 3/8	1 13/16	5/8
CBP50-3-AA	2/0 Stranded	500 kcmil	3	1 1/8	1 13/16	1/2
CBP50-5-AA	2/0 Stranded	500 kcmil	5	1 3/8	2 9/32	5/8
CBP125-3-AA	550 kcmil	1250 kcmil	3	1 3/8	2 3/16	1/2
CBP125-5-AA	550 kcmil	1250 kcmil	5	1 5/8	2 3/4	5/8

© 2011, AFL, all rights reserved. PP-3-00274, 3, 11.8.2022
Specifications are subject to change without notice.

230 kV Aluminum Bolted Bus Supports

DOSSERT®
TYPE CSD-AA

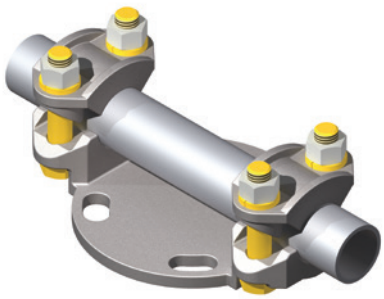

Aluminum Bolted Bus Support For Cable or Pipe

Material
Aluminum Alloy

Hardware
Yellow anodized aluminum nuts, bolts, and lockwashers.
Galvanized steel base mounting hardware is included.

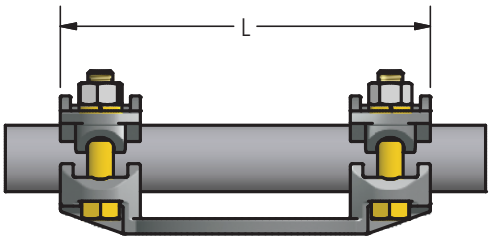

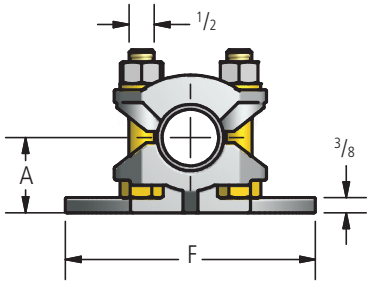

Ordering Information

CATALOG NUMBER	BOLT MOUNT CIRCLE	AAC CABLE RANGE		ACSR CABLE RANGE		DIMENSIONS IN INCHES		
		MIN	MAX	MIN	MAX	A	F	L
CSD21-3-AA	3	4SOL	4/0STR	6	4/0	1 1/8	4 1/4	7 1/8
CSD21-5-AA	5	4SOL	4/0STR	6	4/0	1 1/8	6 1/4	9 3/8
CSD55-3-AA	3	250	550	266.8	477	1 3/8	4 1/4	7 1/8
CSD55-5-AA	5	250	550	266.8	477	1 3/8	6 1/4	9 3/8
CSD111-3-AA	3	600	1113	556.5	1033.5	1 1/2	4 1/4	7 1/8
CSD111-5-AA	5	600	1113	556.5	1033.5	1 5/8	6 1/4	9 3/8
CSD200-3-AA	3	1200	2000	1113	1780	1 3/4	4 1/4	7 3/4
CSD200-5-AA	5	1200	2000	1113	1780	1 7/8	6 1/4	9 1/4

© 2011, AFL, all rights reserved. PP-3-00293, Rev 1, 7.3.13
Specifications are subject to change without notice.

DOSSERT®

TYPE CSP-AA, C2SP-AA

One or Two Pipe Cable Bus Support

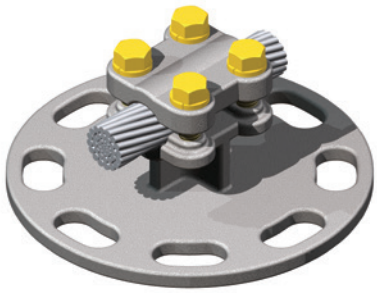

Pipe or Cable Bus Support for two cables or pipes.

Material

Aluminum Alloy

Hardware

Yellow anodized aluminum nuts, bolts, and lockwashers.
Galvanized steel base mounting hardware is included.

Notes

1. For a Double Cable Bus Support add a 2 after 'C'.
2. For two 300 MCM cable, with a 3 in Bolt Circle C2SP87-3-AA.
3. For base mounting dimensions and hardware see page 3 in the general catalog index.

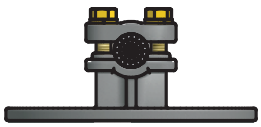

CSP-AA

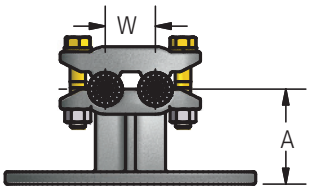

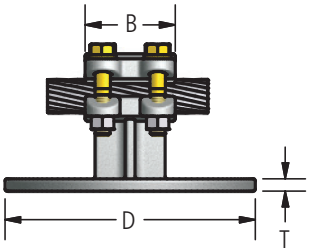

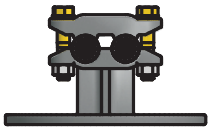

C2SP-AA

Ordering Information

CATALOG NUMBER	CABLE RANGE				SPS	BOLT CIRCLE	DIMENSIONS IN INCHES					BOLT SIZE
	ALUMINUM		ACSR									
	MIN	MAX	MIN	MAX			A	B	D	T	W	
CSP56-3-AA	8SOL	250MCM	6	#4/0	1/8-1/4	3	2 1/4	2 1/2	4 1/4	3/8	1	1/2
CSP56-5-AA	8SOL	250MCM	6	#4/0	1/8-1/4	5	2 1/4	2 1/2	6 1/4	3/8	1	1/2
CSP87-3-AA	300MCM	556.5MCM	226.8MCM	556.5MCM	3/8-1/2	3	2 1/2	2 1/2	4 1/4	3/8	1 1/4	1/2
CSP87-5-AA	300MCM	556.5MCM	226.8MCM	556.5MCM	3/8-1/2	5	2 1/2	2 1/2	6 1/4	3/8	1 1/4	1/2
CSP111-3-AA	636MCM	900MCM	556.5MCM	795MCM	1/2	3	2 3/4	2 3/4	4 1/4	3/8	1 1/2	1/2
CSP111-5-AA	636MCM	900MCM	556.5MCM	795MCM	1/2	5	2 3/4	2 3/4	6 1/4	3/8	1 1/2	1/2
CSP111-7-AA	636MCM	900MCM	556.5MCM	795MCM	1/2	7	2 3/4	2 3/4	8 1/2	1/2	1 1/2	1/2
CSP125-3-AA	954MCM	1192.5MCM	795MCM	1113MCM	3/4	3	3	2 3/4	4 1/4	3/8	1 3/4	1/2
CSP125-5-AA	954MCM	1192.5MCM	795MCM	1113MCM	3/4	5	3	2 3/4	6 1/4	1/2	1 3/4	1/2
CSP125-7-AA	954MCM	1192.5MCM	795MCM	1113MCM	3/4	7	3	2 3/4	8 1/2	1/2	1 3/4	1/2
CSP143-3-AA	1272MCM	1510.5MCM	1113MCM	1431MCM	1	3	3 3/8	2 3/4	4 1/4	3/8	1 7/8	1/2
CSP143-5-AA	1272MCM	1510.5MCM	1113MCM	1431MCM	1	5	3 3/8	2 3/4	6 1/4	1/2	1 7/8	1/2
CSP143-7-AA	1272MCM	1510.5MCM	1113MCM	1431MCM	1	7	3 3/8	2 3/4	8 1/2	1/2	1 7/8	1/2
CSP163-3-AA	1590MCM	2000MCM	1431MCM	1780MCM	1	3	3 1/2	2 3/4	4 1/4	3/8	2 1/16	5/8
CSP163-5-AA	1590MCM	2000MCM	1431MCM	1780MCM	1	5	3 1/2	2 3/4	6 1/4	1/2	2 1/16	5/8
CSP163-7-AA	1590MCM	2000MCM	1431MCM	1780MCM	1	7	3 1/2	2 3/4	8 1/2	1/2	2 1/16	5/8
CSP182-3-AA	2000MCM	2500MCM	2034MCM	2312MCM	1 1/4	3	3 5/8	3 1/4	4 1/4	3/8	2 1/2	5/8
CSP182-5-AA	2000MCM	2500MCM	2034MCM	2312MCM	1 1/4	5	3 5/8	3 1/4	6 1/4	3/8	2 1/2	5/8
CSP182-7-AA	2000MCM	2500MCM	2034MCM	2312MCM	1 1/4	7	3 5/8	3 1/4	8 1/2	1/2	2 1/2	5/8
CSP199-3-AA	2000MCM	3000MCM	2034MCM	2870MCM	1-1/4 - 1-1/2	3	3 5/8	3 1/4	4 1/4	3/8	2 5/8	5/8
CSP199-5-AA	2000MCM	3000MCM	2034MCM	2870MCM	1-1/4 - 1-1/2	5	3 5/8	3 1/4	6 1/4	1/2	2 5/8	5/8
CSP216-3-AA	2500MCM	3500MCM	—	—	1 1/2	3	3 5/8	3 1/4	4 1/4	7/16	3 1/4	5/8
CSP216-5-AA	2500MCM	3500MCM	—	—	1 1/2	5	3 5/8	3 1/4	6 1/4	7/16	3 1/4	5/8

© 2011, AFL, all rights reserved. PP-3-00294, Rev 5, 7.18.2022
Specifications are subject to change without notice.

DOSSERT®

TYPE CVSP-AA

Cable Bus Support

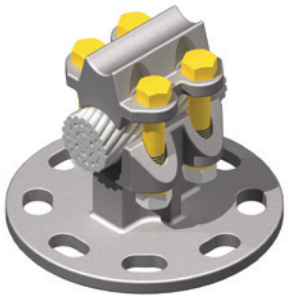

Base mounting holes are slotted to allow for misalignment in insulator stack. Used for both cable and pipe applications. Reversible for covering a broad range of conductor sizes.

Material

Aluminum Alloy

Hardware

Yellow anodized aluminum nuts, bolts, and lockwashers.
Galvanized steel base mounting hardware is included.

Note

For base mounting dimensions and hardware see page 3 in the general catalog index.

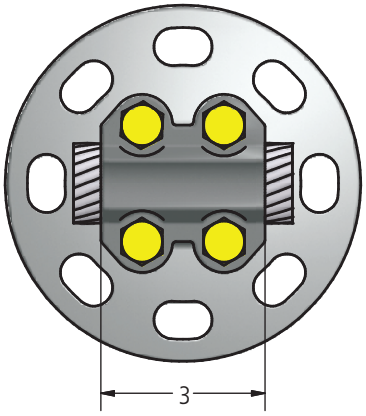

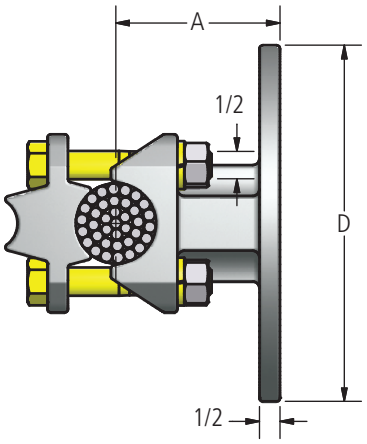

Ordering Information

CATALOG NUMBER	ALUMINUM		SPS		BOLT CIRCLE	DIMENSIONS IN INCHES	
	MIN	MAX	SMALL GROOVE	LARGE GROOVE		A	D
CVSP143A-3-AA	3/0 ACSR-700 MCM AL	750 MCM AL. - 1431 ACSR	1/4	1	3	3	4 1/4
CVSP143A-5-AA	3/0 ACSR-700 MCM AL	751 MCM AL. - 1431 ACSR	1/4	1	5	3	6 1/4

© 2011, AFL, all rights reserved. Rev 1, PP-3-00299, 11.7.17
Specifications are subject to change without notice.

230 kV Aluminum Bolted Bus Supports

DOSSERT®

TYPE PB-AA, PBP-AA

Bus Support With Two Unit Caps

A two unit cap clamping bus support for mounting on insulator bolt circle. Type PB clamps bus directly to insulator while type PBP is provided with two independent matching bus saddles. Available for either cap or base mounting. Unless otherwise specified supports are furnished for cap mounting as illustrated.

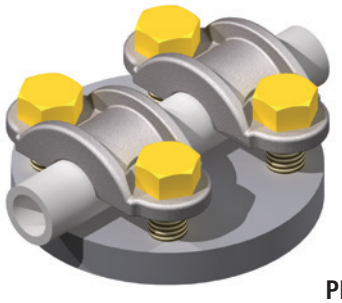

PB-AA

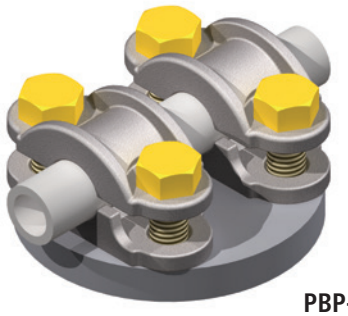

PBP-AA

Material

Aluminum Alloy

Hardware

Yellow anodized aluminum bolts, nuts, and lockwashers.

Note

For a 1" SPS pipe, 3" bolt circle, and saddle order PBP100-3-AA.

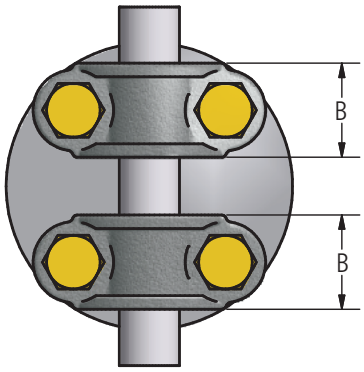

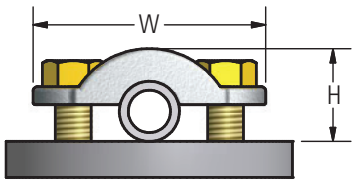

PB-AA

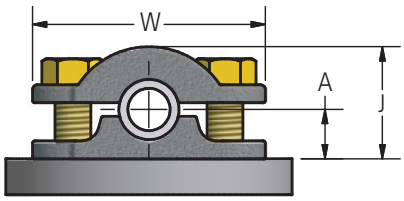

PBP-AA

Ordering Information

CATALOG NUMBER		SPS	BOLT CIRCLE	DIMENSIONS IN INCHES					BOLT SIZE
				A	B	H	J	W	
PB50-3-AA	PBP50-3-AA	1/2	3	3/4	1 5/16	1 3/8	1 11/16	3 1/4	1/2
PB50-5-AA	PBP50-5-AA	1/2	5	3/4	1 3/8	1 1/2	1 13/16	4 15/16	5/8
PB75-3-AA	PBP75-3-AA	3/4	3	7/8	1 5/16	1 9/16	1 15/16	3 1/4	1/2
PB75-5-AA	PBP75-5-AA	3/4	5	7/8	1 3/8	1 11/16	2 1/16	4 15/16	5/8
PB100-3-AA	PBP100-3-AA	1	3	1	1 1/2	1 3/4	2 1/8	3 1/4	1/2
PB100-5-AA	PBP100-5-AA	1	5	1	1 5/8	2	2 5/16	4 15/16	5/8
PB125-3-AA	PBP125-3-AA	1 1/4	3	1 1/8	1 1/2	2 1/8	2 7/16	3 1/4	1/2
PB125-5-AA	PBP125-5-AA	1 1/4	5	1 1/8	1 5/8	2 3/8	2 11/16	4 15/16	5/8
PB150-5-AA	PBP150-5-AA	1 1/2	5	1 1/4	1 3/4	2 7/16	2 3/4	4 15/16	5/8
PB200-5-AA	PBP200-5-AA	2	5	1 1/2	1 3/4	2 3/4	3 1/16	4 15/16	5/8
PB250-5-AA	PBP250-5-AA	2 1/2	5	1 3/4	1 7/8	3 5/16	3 5/8	4 15/16	5/8

© 2011, AFL, all rights reserved. PP-3-00390, 1.12.11
Specifications are subject to change without notice.

230 kV Aluminum Bolted Bus Supports

DOSSERT®

TYPE PL-AA

Pipe Bus Support Slide or Tight Fit

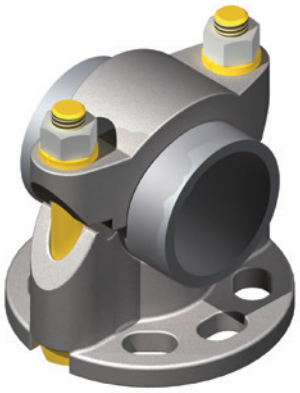

Material

Aluminum Alloy

Hardware

Yellow anodized aluminum bolts, nuts, and lockwashers.
Galvanized steel base mounting hardware is included.

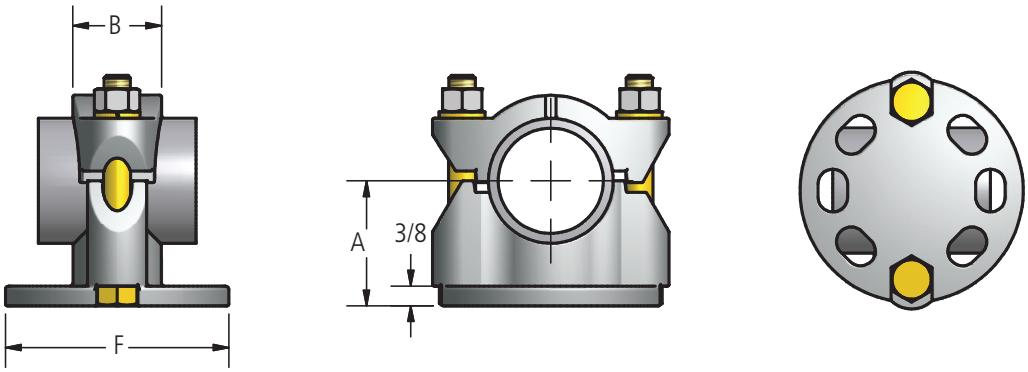

Ordering Information

CATALOG NUMBER	SPS	BOLT CIRCLE	DIMENSIONS IN INCHES			
			A	B	F	BOLT SIZE
PL75-3-AA	3/4	3	1 3/8	1 1/2	4 1/4	1/2
PL75-5-AA	3/4	5	1	1 1/2	6 1/4	1/2
PL100-3-AA	1	3	1 5/8	1 1/2	4 1/4	1/2
PL100-5-AA	1	5	1 1/8	1 1/2	6 1/4	1/2
PL125-3-AA	1 1/4	3	1 3/4	1 11/16	4 1/4	1/2
PL125-5-AA	1 1/4	5	1 3/8	1 11/16	6 1/4	1/2
PL150-3-AA	1 1/2	3	2	1 11/16	4 1/4	1/2
PL150-5-AA	1 1/2	5	1 1/2	1 11/16	6 1/4	1/2
PL200-3-AA	2	3	2 3/8	1 11/16	4 1/4	1/2
PL200-5-AA	2	5	2 1/4	1 11/16	6 1/4	1/2
PL250-3-AA	2 1/2	3	2 5/8	1 3/4	4 1/4	1/2
PL250-5-AA	2 1/2	5	2 1/2	1 3/4	6 1/4	1/2
PL300-3-AA	3	3	2 7/8	1 3/4	6 1/4	5/8
PL300-5-AA	3 1/2	5	3	1 3/4	6 1/4	5/8

© 2011, AFL, all rights reserved. PP-3-00398, 1.12.11
Specifications are subject to change without notice.

DOSSERT®

TYPE PLH-AA

Pipe Bus Support Sliding Ring



Material

Aluminum Alloy

Hardware

Galvanized steel mounting hardware included.

Note

For Chatter Spring, add -CH to catalog number. Example: PLH300-3-CH-AA

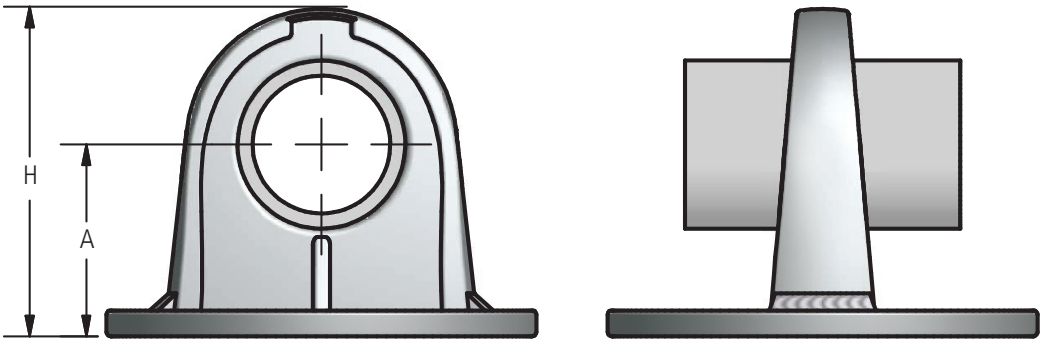

Ordering Information

CATALOG NUMBER	SPS	BOLT CIRCLE	DIMENSIONS IN INCHES	
			A	H
PLH50-3-AA	1/2	3	1-3/4	3
PLH50-5-AA	1/2	5	2-1/8	3-3/4
PLH75-3-AA	3/4	3	2	3-3/8
PLH75-5-AA	3/4	5	2-1/4	4-1/8
PLH100-3-AA	1	3	2	3-1/2
PLH100-5-AA	1	5	2-1/4	4-1/4
PLH125-3-AA	1-1/4	3	2-1/4	4
PLH125-5-AA	1-1/4	5	2-3/8	4-3/4
PLH150-3-AA	1-1/2	3	2-1/2	4-3/8
PLH150-5-AA	1-1/2	5	2-1/2	5-1/8
PLH200-3-AA	2	3	2-3/4	4-1/8
PLH200-5-AA	2	5	2-3/4	5-1/4
PLH250-3-AA	2-1/2	3	3-1/8	5-1/4
PLH250-5-AA	2-1/2	5	3-1/8	6
PLH300-3-AA	3	3	3-5/8	6-5/32
PLH300-5-AA	3	5	3-5/8	6-5/32
PLH350-3-AA	3-1/2	3	4	6-25/32
PLH350-5-AA	3-1/2	5	4	6-25/32
PLH350-7-AA	3-1/2	7	4-1/8	6-29/32
PLH400-3-AA	4	3	4-1/2	7-3/8
PLH400-5-AA	4	5	4-1/2	7-17/32
PLH500-3-AA	5	3	5	8-9/16
PLH500-5-AA	5	5	5	8-9/16
PLH500-7-AA	5	7	5-1/8	8-11/16
PLH600-5-AA	6	5	5-1/2	9-7/16

© 2011, AFL, all rights reserved. PP-3-00400, Revision 6, 3.1.2023
Specifications are subject to change without notice.

230 kV Aluminum Bolted Bus Supports

DOSSERT®

TYPE PSC-AA

Pipe Bus Support Coupler

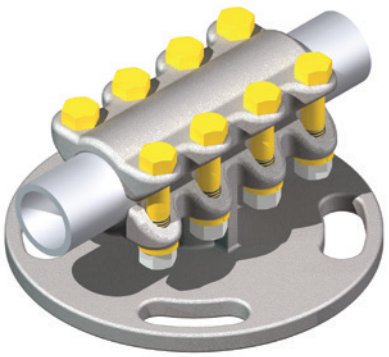

A bus support coupler for joining and supporting two tubular buses on a post type insulator. Designed for a high resistance to impact or sustained cantilever and torsional stresses. Nuts and bolts are furnished for base mounting.

Material

Aluminum Alloy

Hardware

Yellow anodized aluminum bolts, nuts, and lockwashers.

Notes

For base mounting dimensions and hardware see page 3 in the general catalog index.

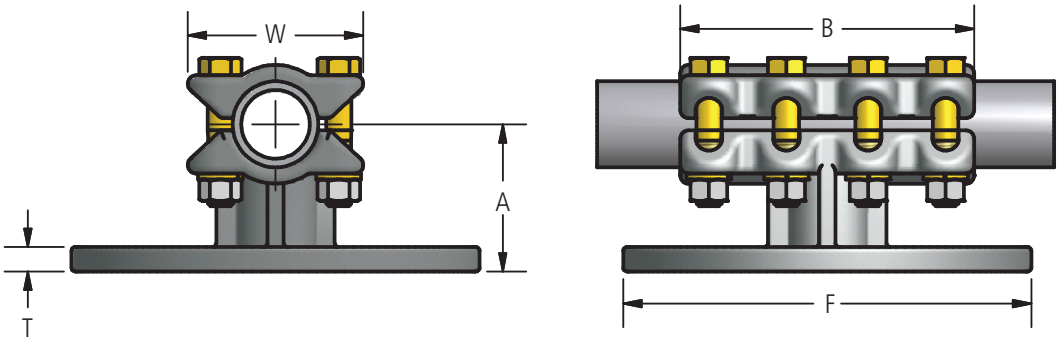

Ordering Information

CATALOG NUMBER	SPS	BOLT CIRCLE	DIMENSIONS IN INCHES					
			A	B	F	T	W	BOLT SIZE
PSC50-3-AA	1/2	3	1 3/4	5 1/4	4 1/4	3/8	2 3/4	1/2
PSC50-5-AA	1/2	5	2 1/8	5 1/4	6 1/4	3/8	2 3/4	1/2
PSC75-3-AA	3/4	3	2	5 3/4	4 1/4	3/8	2 13/16	1/2
PSC75-5-AA	3/4	5	2 1/4	5 3/4	6 1/4	3/8	2 13/16	1/2
PSC100-3-AA	1	3	2	5 3/4	4 1/4	3/8	3 1/16	1/2
PSC100-5-AA	1	5	2 1/4	5 3/4	6 1/4	3/8	3 1/16	1/2
PSC125-3-AA	1 1/4	3	2 1/4	6 1/4	4 1/4	3/8	3 13/32	1/2
PSC125-5-AA	1 1/4	5	2 3/8	6 1/4	6 1/4	3/8	3 13/32	1/2
PSC150-3-AA	1 1/2	3	2 1/2	6 1/4	4 1/4	3/8	4 5/16	1/2
PSC150-5-AA	1 1/2	5	2 1/2	6 1/4	6 1/4	3/8	4 5/16	1/2
PSC200-3-AA	2	3	2 3/4	6 3/4	4 1/4	3/8	4 1/4	1/2
PSC200-5-AA	2	5	2 3/4	6 3/4	6 1/4	3/8	4 1/4	1/2
PSC250-3-AA	2 1/2	3	3 1/8	6 3/4	4 1/4	3/8	4 5/8	1/2
PSC250-5-AA	2 1/2	5	3 1/8	6 3/4	6 1/4	3/8	4 5/8	1/2
PSC300-3-AA	3	3	3 5/8	7 1/4	4 1/4	3/8	5 1/2	5/8
PSC300-5-AA	3	5	3 5/8	7 1/4	6 1/4	3/8	5 1/2	5/8
PSC350-3-AA	3 1/2	3	4	7 1/4	4 1/4	7/16	6	5/8
PSC350-5-AA	3 1/2	5	4	7 1/4	6 1/4	7/16	6	5/8
PSC400-3-AA	4	3	4 1/2	7 1/4	4 1/4	7/16	6 1/2	5/8
PSC400-5-AA	4	5	4 1/2	7 1/4	6 1/4	7/16	6 1/2	5/8

© 2011, AFL, all rights reserved. PP-3-00403, 1.12.11
Specifications are subject to change without notice.

TYPE PSD-AA, PSD-CH-AA

Bus Support, Pipe, Slide or Tight Fit

Bolted clamp type support, for pipe-to-pipe connection, with reversible tight or rigid fit.

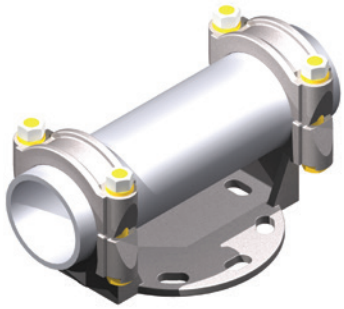

Material

Aluminum Alloy

Hardware

Yellow anodized aluminum bolts, nuts and lockwashers
Galvanized steel base mounting hardware included

Notes

- For Chatter Spring, add "-CH" to catalog number. EX: PSD400-3-CH-AA
- For Grade Five Galvanized Steel Hardware, add "-GS5" to catalog number. EX: PSD400-5-AA-GS5
- For Stainless Steel bolts, lockwashers and Everdur nuts, add "-SSHBN" to catalog number. EX: PSD400-3-AA-SSBHN
- For base mounting dimensions and hardware, see page 3 in the general catalog index of AFL's Substation Catalog or page 46 of the Swage Accessories Catalog.

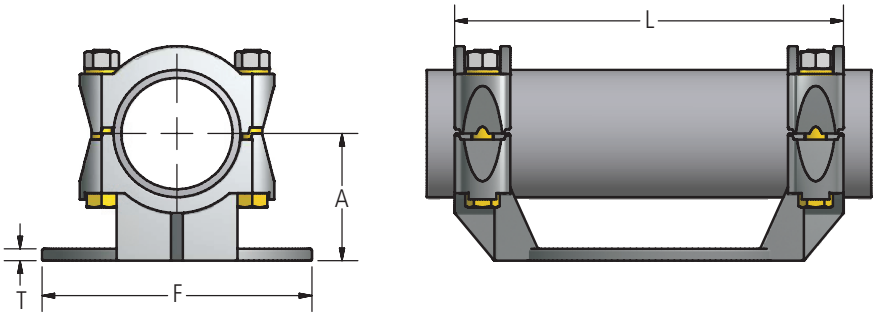

Ordering Information

CATALOG NUMBER		S.P.S.	BOLT CIRCLE	DIMENSIONS IN INCHES				BOLT SIZE
STANDARD	CHATTER SPRING			A	F	L	T	
PSD75-3-AA	PSD75-3-CH-AA	3/4	3	2	4-1/4	6-3/4	3/8	1/2
PSD75-5-AA	PSD75-5-CH-AA	3/4	5	2-1/4	6-1/4	9	3/8	1/2
PSD100-3-AA	PSD100-3-CH-AA	1	3	2	4-1/4	7	3/8	1/2
PSD100-5-AA	PSD100-5-CH-AA	1	5	2-1/4	6-1/4	9	3/8	1/2
PSD125-3-AA	PSD125-3-CH-AA	1-1/4	3	2-1/4	4-1/4	7-1/4	3/8	1/2
PSD125-5-AA	PSD125-5-CH-AA	1-1/4	5	2-3/8	6-1/4	9-1/2	3/8	1/2
PSD150-3-AA	PSD150-3-CH-AA	1-1/2	3	2-1/2	4-1/4	7-1/4	3/8	1/2
PSD150-5-AA	PSD150-5-CH-AA	1-1/2	5	2-1/2	6-1/4	9-1/2	3/8	1/2
PSD200-3-AA	PSD200-3-CH-AA	2	3	2-3/4	4-1/4	7-1/4	3/8	1/2
PSD200-5-AA	PSD200-5-CH-AA	2	5	2-3/4	6-1/4	9-1/2	3/8	1/2
PSD250-3-AA	PSD250-3-CH-AA	2-1/2	3	3-1/8	4-1/4	7-3/4	3/8	1/2
PSD250-5-AA	PSD250-5-CH-AA	2-1/2	5	3-1/8	6-1/4	10	3/8	1/2
PSD300-3-AA	PSD300-3-CH-AA	3	3	3-5/8	4-1/4	7-3/4	3/8	5/8
PSD300-5-AA	PSD300-5-CH-AA	3	5	3-5/8	6-1/4	10	3/8	5/8
PSD300-7-AA	PSD300-7-CH-AA	3	7	3-5/8	8-1/2	12-1/4	1/2	5/8
PSD350-3-AA	PSD350-3-CH-AA	3-1/2	3	4	4-1/4	7-3/4	3/8	5/8
PSD350-5-AA	PSD350-5-CH-AA	3-1/2	5	4	6-1/4	10	3/8	5/8
PSD350-7-AA	PSD350-7-CH-AA	3-1/2	7	4	8-1/2	12	1/2	5/8

© 2011, AFL, all rights reserved. PP-3-00405 , Revision 2, 9.5.18
Specifications are subject to change without notice.

TYPE PSD-AA, PSD-CH-AA (cont.)

Bus Support, Pipe, Slide or Tight Fit

Ordering Information

CATALOG NUMBER		S.P.S.	BOLT CIRCLE	DIMENSIONS IN INCHES				BOLT SIZE
STANDARD	CHATTER SPRING			A	F	L	T	
PSD400-3-AA	PSD400-3-CH-AA	4	3	4-1/2	4-1/4	7-3/4	1/2	5/8
PSD400-5-AA	PSD400-5-CH-AA	4	5	4-1/2	6-1/4	10	1/2	5/8
PSD400-7-AA	PSD400-7-CH-AA	4	7	4-1/2	8-1/2	12-1/4	1/2	5/8
PSD450-3-AA	PSD450-3-CH-AA	4-1/2	3	4-3/4	4-1/4	8	1/2	5/8
PSD450-5-AA	PSD450-5-CH-AA	4-1/2	5	4-3/4	6-1/4	10	1/2	5/8
PSD450-7-AA	PSD450-7-CH-AA	4-1/2	7	4-3/4	8-1/2	12-3/4	5/8	5/8
PSD500-3-AA	PSD500-3-CH-AA	5	3	5	4-1/4	8	1/2	5/8
PSD500-5-AA	PSD500-5-CH-AA	5	5	5	6-1/4	10	1/2	5/8
PSD500-7-AA	PSD500-7-CH-AA	5	7	5	8-1/2	12-3/4	1/2	5/8
PSD600-3-AA	PSD600-3-CH-AA	6	3	5-1/2	4-1/4	8-1/4	1/2	5/8
PSD600-5-AA	PSD600-5-CH-AA	6	5	5-1/2	6-1/4	10-1/2	1/2	5/8
PSD600-7-AA	PSD600-7-CH-AA	6	7	5-1/2	8-1/2	12-3/4	1/2	5/8
PSD800-5-AA	PSD800-5-CH-AA	8	5	6-7/8	6-1/4	10-1/2	1/2	5/8
PSD800-7-AA	PSD800-7-CH-AA	8	7	6-7/8	8-1/2	12-3/4	1/2	5/8

© 2011, AFL, all rights reserved. PP-3-00405 , Revision 2, 9.5.18
Specifications are subject to change without notice.

230 kV Aluminum Bolted Bus Supports

DOSSERT®

TYPE PSDC-AA

Bus Support, Pipe, Slide or Tight Fit



A bus support coupler for joining and supporting two tubular buses on a post type insulator. Designed for high resistance to impact and cantilever and torsional stresses.

Material

Aluminum Alloy

Hardware

Yellow anodized aluminum nuts, bolts and lockwashers.
Galvanized steel mounting hardware included.

Notes

For base mounting dimensions and hardware see page 3 in the general catalog index.

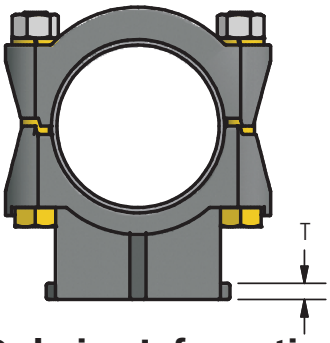

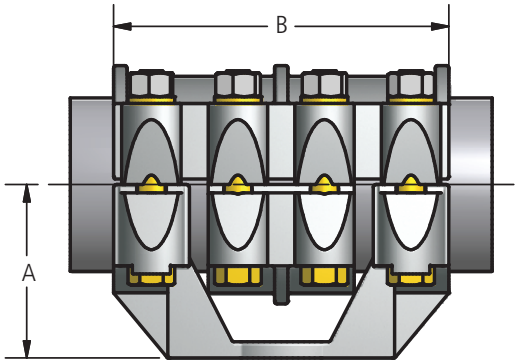

Ordering Information

CATALOG NUMBER	SPS	BOLT CIRCLE	DIMENSIONS IN INCHES			
			A	B	T	BOLT SIZE
PSDC75-3-AA	3/4	3	2	6 3/4	3/8	1/2
PSDC75-5-AA	3/4	5	2 1/4	9	3/8	1/2
PSDC100-3-AA	1	3	2	7	3/8	1/2
PSDC100-5-AA	1	5	2 1/4	7 1/4	3/8	1/2
PSDC125-3-AA	1 1/4	3	2 1/4	7 1/4	3/8	1/2
PSDC125-5-AA	1 1/4	5	2 3/8	9 1/2	3/8	1/2
PSDC150-3-AA	1 1/2	3	2 1/2	7 1/4	3/8	1/2
PSDC150-5-AA	1 1/2	5	2 1/2	9 1/2	3/8	1/2
PSDC200-3-AA	2	3	2 3/4	7 1/4	3/8	1/2
PSDC200-5-AA	2	5	2 3/4	9 1/2	3/8	1/2
PSDC250-3-AA	2 1/2	3	3 1/8	7 3/4	3/8	1/2
PSDC250-5-AA	2 1/2	5	3 1/8	10	3/8	1/2
PSDC300-3-AA	3	3	3 5/8	7 3/4	3/8	5/8
PSDC300-5-AA	3	5	3 5/8	10	3/8	5/8
PSDC300-7-AA	3	7	3 5/8	12 1/4	1/2	5/8
PSDC350-3-AA	3 1/2	3	4	7 3/4	3/8	5/8
PSDC350-5-AA	3 1/2	5	4	10	3/8	5/8
PSDC350-7-AA	3 1/2	7	4	12 1/4	1/2	5/8
PSDC400-3-AA	4	3	4 1/2	7 3/4	1/2	5/8
PSDC400-5-AA	4	5	4 1/2	10	1/2	5/8
PSDC400-7-AA	4	7	4 1/2	12 1/4	1/2	5/8
PSDC500-3-AA	5	3	5	8 1/4	1/2	5/8
PSDC500-5-AA	5	5	5	10 1/2	1/2	5/8
PSDC500-7-AA	5	7	5	12 3/4	5/8	5/8
PSDC600-3-AA	6	3	5 1/2	7 3/4	1/2	5/8
PSDC600-5-AA	6	5	5 1/2	10	1/2	5/8
PSDC600-7-AA	6	7	5 1/2	12 1/4	1/2	5/8

© 2011, AFL, all rights reserved. PP-3-00406, 1.12.11
Specifications are subject to change without notice.

230 kV Aluminum Bolted Bus Supports

DOSSERT®

TYPE PSDCS-AA

Bus Support, Pipe, Slide or Tight Fit



The bus support is supplied with chatter springs to reduce chatter. The support can be used as a sliding support or fixed support.

Material

Aluminum Alloy

Hardware

Yellow anodized aluminum nuts, bolts and lockwashers.
Galvanized Steel mounting hardware included.

Notes

For base mounting dimensions and hardware see page 3 in the general catalog index.

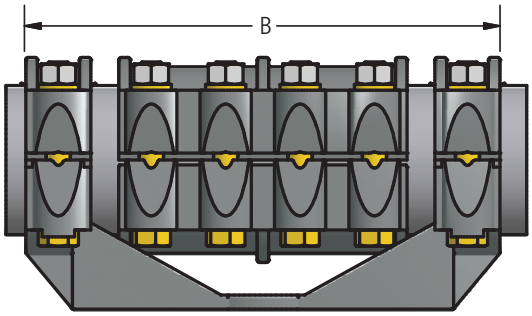

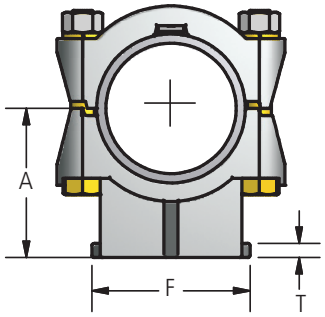

Ordering Information

CATALOG NUMBER	SPS	BOLT CIRCLE	DIMENSIONS IN INCHES				
			A	B	F	T	BOLT SIZE
PSDCS75-3-AA	3/4	3	2	6 3/4	4 1/4	3/8	1/2
PSDCS75-5-AA	3/4	5	2 1/4	9	6 1/4	3/8	1/2
PSDCS100-3-AA	1	3	2	7	4 1/4	3/8	1/2
PSDCS100-5-AA	1	5	2 1/4	7 1/4	6 1/4	3/8	1/2
PSDCS125-3-AA	1 1/4	3	2 1/4	7 1/4	4 1/4	3/8	1/2
PSDCS125-5-AA	1 1/4	5	2 3/8	9 1/2	6 1/4	3/8	1/2
PSDCS150-3-AA	1 1/2	3	2 1/2	7 1/4	4 1/4	3/8	1/2
PSDCS150-5-AA	1 1/2	5	2 1/2	9 1/2	6 1/4	3/8	1/2
PSDCS200-3-AA	2	3	2 3/4	7 1/4	4 1/4	3/8	1/2
PSDCS200-5-AA	2	5	2 3/4	9 1/2	6 1/4	3/8	1/2
PSDCS250-3-AA	2 1/2	3	3 1/8	7 3/4	4 1/4	3/8	1/2
PSDCS250-5-AA	2 1/2	5	3 1/8	10	6 1/4	3/8	1/2
PSDCS300-3-AA	3	3	3 5/8	7 3/4	4 1/4	3/8	5/8
PSDCS300-5-AA	3	5	3 5/8	10	6 1/4	3/8	5/8
PSDCS300-7-AA	3	7	3 5/8	12 1/4	8 1/2	1/2	5/8
PSDCS350-3-AA	3 1/2	3	4	7 3/4	4 1/4	3/8	5/8
PSDCS350-5-AA	3 1/2	5	4	10	6 1/4	3/8	5/8
PSDCS350-7-AA	3 1/2	7	4	12 1/4	8 1/2	1/2	5/8
PSDCS400-3-AA	4	3	4 1/2	7 3/4	4 1/4	1/2	5/8
PSDCS400-5-AA	4	5	4 1/2	10	6 1/4	1/2	5/8
PSDCS400-7-AA	4	7	4 1/2	12 1/4	8 1/2	1/2	5/8
PSDCS500-3-AA	5	3	5	8 1/4	4 1/4	1/2	5/8
PSDCS500-5-AA	5	5	5	10 1/2	6 1/4	1/2	5/8
PSDCS500-7-AA	5	7	5	12 3/4	8 1/2	5/8	5/8
PSDCS600-3-AA	6	3	5 1/2	7 3/4	4 1/4	1/2	5/8
PSDCS600-5-AA	6	5	5 1/2	10	6 1/4	1/2	5/8
PSDCS600-7-AA	6	7	5 1/2	12 1/4	8 1/2	1/2	5/8

© 2011, AFL, all rights reserved. PP-3-00407, Revision 1, 7.23.13
Specifications are subject to change without notice.

230 kV Aluminum Bolted Bus Supports

DOSSERT®

TYPE PSG-AA

Cable, Bus Support

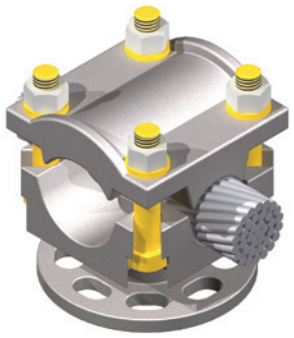

Material

Aluminum Alloy

Hardware

Yellow anodized aluminum nuts, bolts, and lockwashers.
Galvanized steel base mounting hardware is included.

Notes

For base mounting dimensions and hardware see page 3 in the general catalog index.

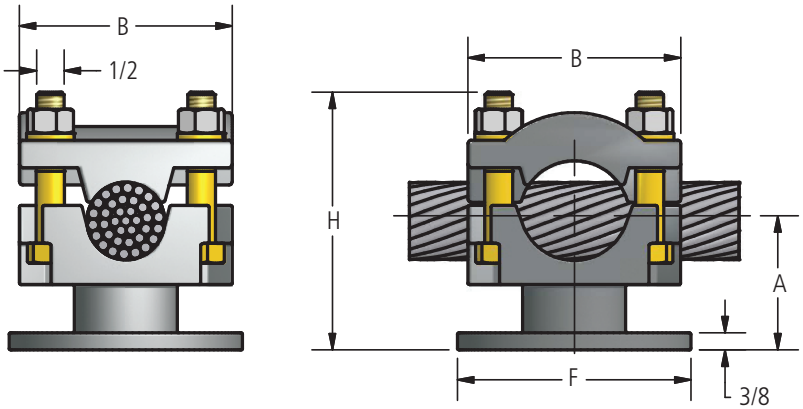

Ordering Information

CATALOG NUMBER	AAC CABLE RANGE		BUS RANGE (OD) IN INCHES		BOLT CIRCLE	DIMENSIONS IN INCHES				CANTILEVER FORCE LBS	
	MIN.	MAX.	MIN.	MAX.		A	B	F	H	ALLOWABLE	ULTIMATE
PSG81-3-AA	#4	500MCM	7/16	1 5/16	3	1 9/16	2 3/8	4 1/4	2 3/8	-	-
PSG131-3-AA	3/0STR	1250MCM	7/16	1 5/16	3	2 1/8	3 1/8	4 1/4	3 11/16	2310	3340
PSG131-5-AA	3/0STR	1250MCM	7/16	1 5/16	5	2 1/8	3 1/8	6 1/4	3 11/16	4490	6480
PSG199-3-AA	750MCM	2870MCM	1	2	3	2 5/8	3 7/8	4 1/4	4 5/8	2410	3480
PSG199-5-AA	750MCM	2870MCM	1	2	5	2 5/8	3 7/8	6 1/4	4 5/8	4720	6820
PSG199-7-AA	750MCM	2870MCM	1	2	7	2 5/8	3 7/8	8 1/2	4 5/8	-	-

© 2011, AFL, all rights reserved. PP-3-00409, 1.12.11
Specifications are subject to change without notice.

230 kV Aluminum Bolted Bus Supports

DOSSERT®

TYPE PSRE-AA

Low Mounting Variable Bus Support for Cable/Pipe



A cost effective low mounting variable bus support clamp. The wide range of conductor sizes accommodated by each clamp size minimizes the number of clamps to cover a given range of bus sizes.

Material

Aluminum Alloy

Hardware

Yellow anodized aluminum nuts, bolts, and lockwashers.
Galvanized steel base mounting hardware is included.

Notes

For base mounting dimensions and hardware see page 3 in the general catalog index.

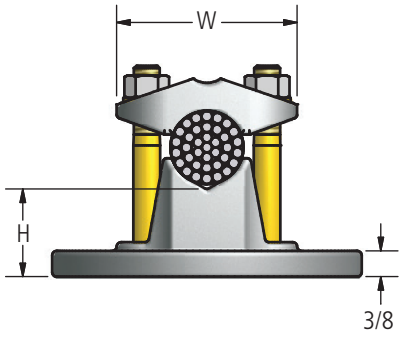

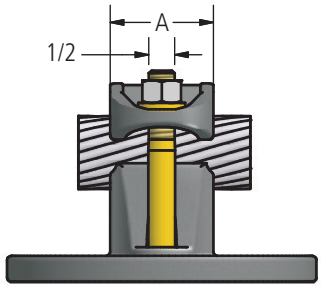

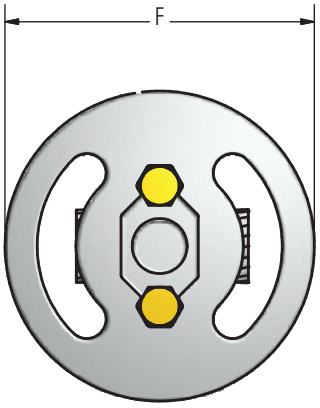

Ordering Information

CATALOG NUMBER	CONDUCTOR RANGE		SPS/EHPS		DIAMETER		BOLT CIRCLE	DIMENSIONS IN INCHES			
	MIN	MAX	MIN	MAX	MIN	MAX		A	F	H	W
PSRE75-3-AA	#2 STR	800 MCM	1/2	3/4	1/4	1 1/16	3	1 1/2	4 1/4	1	2 13/16
PSRE75-5-AA	#2 STR	800 MCM	1/2	3/4	1/4	1 1/16	5	1 1/2	6 1/4	1	2 13/16
PSRE125-3-AA	556.5 MCM	2000 MCM	3/4	1 1/4	13/16	1 11/16	3	1 3/4	4 1/4	1	3 7/16
PSRE125-5-AA	556.5 MCM	2000 MCM	3/4	1 1/4	13/16	1 11/16	5	1 3/4	6 1/4	1	3 7/16
PSRE159-3-AA	1/0 STR	1590 MCM	1/2	1	3/8	1 5/11	3	1 5/8	4 1/4	1 5/8	2 3/4
PSRE159-5-AA	1/0 STR	1590 MCM	1/2	1	3/8	1 5/11	5	1 5/8	6 1/4	1 5/8	2 3/4
PSRE159-7-AA	1/0 STR	1590 MCM	1/2	1	3/8	1 5/11	7	1 5/8	8 1/2	1 5/8	2 3/4
PSRE200-3-AA	2000 MCM	3500 MCM	1 1/4	2	1 5/8	2 3/8	3	1 3/4	4 1/4	1	4 1/8
PSRE200-5-AA	2000 MCM	3500 MCM	1 1/4	2	1 5/8	2 3/8	5	1 3/4	6 1/4	1	4 1/8

© 2011, AFL, all rights reserved. PP-3-00412, 1.12.11
Specifications are subject to change without notice.

230 kV Aluminum Bolted Bus Supports

DOSSERT®

TYPE PSS-AA, PSS-CH-AA

Pipe Bus Support Slide or Tight Fit

A high strength aluminum support for securing a tubular bus to a post or pedestal type insulator. Designed with a high resistance to impact and sustained cantilever and torsion stresses. Entire unit is non-magnetic and corrosion resistant. Nuts and bolts are furnished for base mounting or slotted mouting. Reversible cap permits rigid or slip fit on conductor.

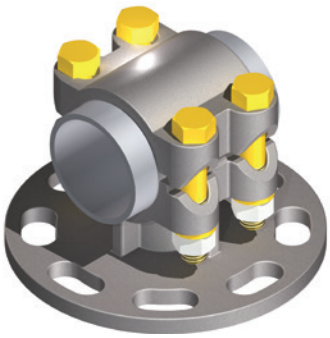

PSS-AA

Material

Aluminum Alloy

Hardware

Yellow anodized aluminum bolts, nuts, and lockwashers.
Galvanized steel base mounting hardware is included.

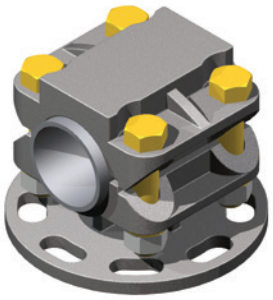

PSS-CH-AA

Notes

For base mounting dimensions and hardware see page 3 in the general catalog index.

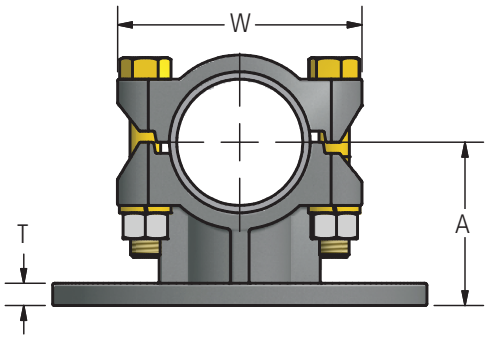

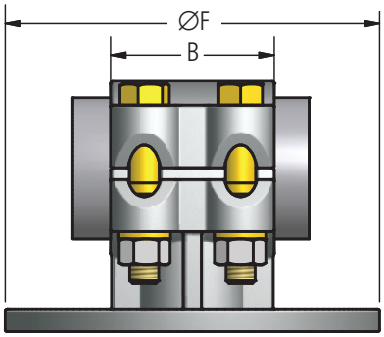

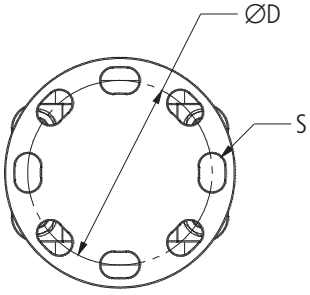

FIG. 1

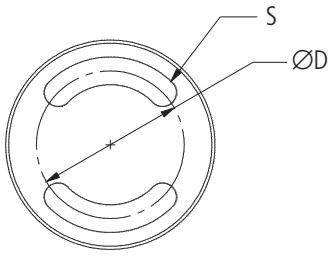

FIG. 2

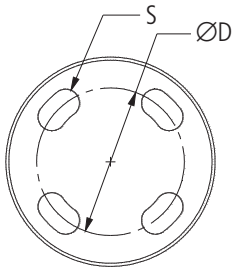

FIG. 3

© 2011, AFL, all rights reserved. PP-3-00413, Revision 3, 12.14.18
Specifications are subject to change without notice.

DOSSERT®

TYPE PSS-AA, PSS-CH-AA

Pipe Bus Support Slide or Tight Fit

Ordering Information

CATALOG NUMBER		SPS	FIG. NO.	DIMENSIONS IN INCHES							BOLT SIZE
STANDARD	WITH CHATTER SPRING			A	B	D	F	S	T	W	
PSS50-3-AA	PSS50-3-CH-AA	1/2	2	1.75	2.06	3.00	4.25	0.50	0.38	2.41	1/2
PSS50-5-AA	PSS50-5-CH-AA	1/2	1	2.13	2.50	5.00	6.25	0.69	0.38	2.63	1/2
PSS75-3-AA	PSS75-3-CH-AA	3/4	1	2.00	2.75	3.00	4.25	0.56	0.38	2.81	1/2
PSS75-5-AA	PSS75-5-CH-AA	3/4	1	2.25	2.75	5.00	6.25	0.69	0.38	2.81	1/2
PSS100-3-AA	PSS100-3-CH-AA	1	1	2.00	2.75	3.00	4.25	0.56	0.38	3.06	1/2
PSS100-5-AA	PSS100-5-CH-AA	1	1	2.25	2.75	5.00	6.25	0.69	0.38	3.06	1/2
PSS125-3-AA	PSS125-3-CH-AA	1 1/4	3	2.25	3.00	3.00	4.25	0.56	0.38	3.75	1/2
PSS125-5-AA	PSS125-5-CH-AA	1 1/4	1	2.38	3.00	5.00	6.25	0.69	0.38	3.41	1/2
PSS150-3-AA	PSS150-3-CH-AA	1 1/2	1	2.50	3.00	3.00	4.25	0.56	0.38	3.66	1/2
PSS150-5-AA	PSS150-5-CH-AA	1 1/2	1	2.50	3.00	5.00	6.25	0.69	0.38	3.66	1/2
PSS200-3-AA	PSS200-3-CH-AA	2	1	2.75	3.25	3.00	4.25	0.56	0.38	4.13	1/2
PSS200-5-AA	PSS200-5-CH-AA	2	1	2.75	3.25	5.00	6.25	0.69	0.38	4.13	1/2
PSS250-3-AA	PSS250-3-CH-AA	2 1/2	1	3.13	3.25	3.00	4.25	0.56	0.38	4.63	1/2
PSS250-5-AA	PSS250-5-CH-AA	2 1/2	1	3.13	3.25	5.00	6.25	0.69	0.38	4.63	1/2
PSS300-3-AA	PSS300-3-CH-AA	3	1	3.63	3.75	3.00	4.25	0.56	0.44	4.63	5/8
PSS300-5-AA	PSS300-5-CH-AA	3	1	3.63	3.75	5.00	6.25	0.69	0.44	4.63	5/8
PSS350-3-AA	PSS350-3-CH-AA	3 1/2	1	4.00	3.75	3.00	4.25	0.56	0.44	6.13	5/8
PSS350-5-AA	PSS350-5-CH-AA	3 1/2	1	4.00	3.75	5.00	6.25	0.69	0.44	6.13	5/8
PSS350-7-AA	PSS350-7-CH-AA	3 1/2	1	4.00	3.75	7.00	8.25	0.81	0.50	6.13	3/4
PSS400-3-AA	PSS400-3-CH-AA	4	3	4.50	3.75	3.00	4.25	0.56	0.38	6.63	5/8
PSS400-5-AA	PSS400-5-CH-AA	4	1	4.50	3.75	5.00	6.25	0.69	0.44	6.63	5/8
PSS400-7-AA	PSS400-7-CH-AA	4	1	4.50	3.75	7.00	8.25	0.81	0.50	6.63	3/4
PSS400-5-4.75H-AA	PSS400-5-4.75H-CH-AA	4	1	4.75	3.75	5.00	6.25	0.69	0.44	6.63	5/8
PSS400-5-5.0H-AA	PSS400-5-5.0H-CH-AA	4	1	5.00	3.75	5.00	6.25	0.69	0.44	6.63	5/8
PSS450-3-AA	PSS450-3-CH-AA	4 1/2	1	4.75	3.75	3.00	4.25	0.56	0.44	7.13	5/8
PSS450-5-AA	PSS450-5-CH-AA	4 1/2	1	4.75	3.75	5.00	6.25	0.69	0.44	7.13	5/8
PSS500-3-AA	PSS500-3-CH-AA	5	1	5.00	3.75	3.00	4.25	0.56	0.38	7.69	5/8
PSS500-5-AA	PSS500-5-CH-AA	5	1	5.00	3.75	5.00	6.25	0.69	0.50	7.69	5/8
PSS500-7-AA	PSS500-7-CH-AA	5	1	5.00	3.75	7.00	8.50	0.81	0.50	7.69	5/8
PSS600-5-AA	PSS600-5-CH-AA	6	1	6.00	4.00	5.00	6.25	0.69	0.50	8.75	5/8

© 2011, AFL, all rights reserved. PP-3-00413, Revision 3, 12.14.18
Specifications are subject to change without notice.

230 kV Aluminum Bolted Bus Supports

DOSSERT®

TYPE PSSR-AA, PSSR-CH-AA

Tubular Bus Support

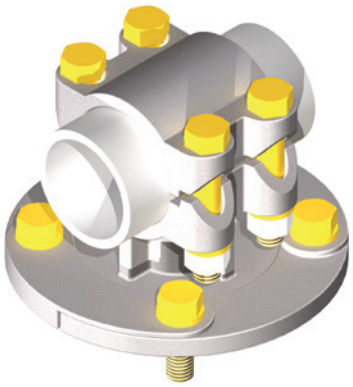

An aluminum support for securing a tubular bus to a post or pedestal type insulator. Fully adjustable to any angle within a complete circle (360°) with the advantage of four bolts maintaining angular setting as well as mounting pressure. Reversible cap permits rigid or slip fit on conductor. Unless otherwise specified cap screws are supplied.

Material

Aluminum Alloy

Hardware

Yellow anodized aluminum bolts, nuts, and lockwashers.
Galvanized steel base mounting hardware is included.

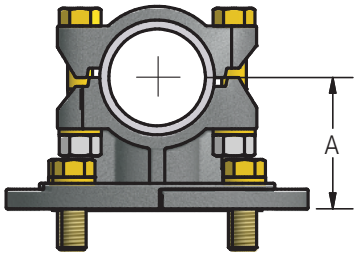

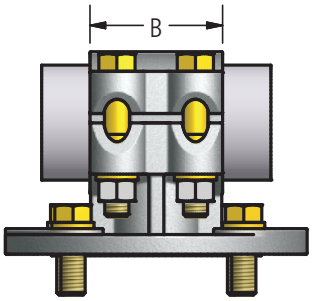

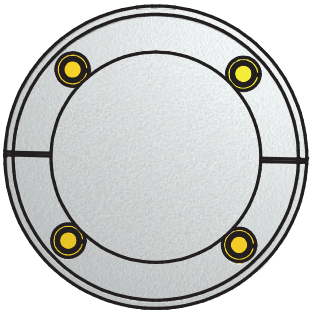

Ordering Information

CATALOG NUMBER		SPS	BOLT CIRCLE	DIMENSIONS IN INCHES			
				A	B	BOLT SIZE	
STANDARD	WITH CHATTER SPRING					CAP	BASE
PSSR50-3-AA	PSSR50-3-CH-AA	1/2	3	1-3/4	2-1/8	3/8	1/2
PSSR50-5-AA	PSSR50-5-CH-AA	1/2	5	2-1/8	2-1/8	3/8	5/8
PSSR75-3-AA	PSSR75-3-CH-AA	3/4	3	2	2-1/8	3/8	1/2
PSSR75-5-AA	PSSR75-5-CH-AA	3/4	5	2-1/4	2-1/8	3/8	5/8
PSSR100-3-AA	PSSR100-3-CH-AA	1	3	2	2-1/8	3/8	1/2
PSSR100-5-AA	PSSR100-5-CH-AA	1	5	2-1/4	2-1/8	3/8	5/8
PSSR125-3-AA	PSSR125-3-CH-AA	1-1/4	3	2-1/4	2-1/4	1/2	1/2
PSSR125-5-AA	PSSR125-5-CH-AA	1-1/4	5	2-3/8	2-1/4	1/2	5/8
PSSR150-3-AA	PSSR150-3-CH-AA	1-1/2	3	2-1/2	2-1/2	1/2	1/2
PSSR150-5-AA	PSSR150-5-CH-AA	1-1/2	5	2-1/2	2-1/2	1/2	5/8
PSSR200-3-AA	PSSR200-3-CH-AA	2	3	2-3/4	2-3/4	1/2	1/2
PSSR200-5-AA	PSSR200-5-CH-AA	2	5	2-3/4	2-3/4	1/2	5/8
PSSR250-3-AA	PSSR250-3-CH-AA	2-1/2	3	3-1/8	3	1/2	1/2
PSSR250-5-AA	PSSR250-5-CH-AA	2-1/2	5	3-1/8	3	1/2	5/8
PSSR300-3-AA	PSSR300-3-CH-AA	3	3	3-5/8	3-1/4	5/8	1/2
PSSR300-5-AA	PSSR300-5-CH-AA	3	5	3-5/8	3-1/4	5/8	5/8
PSSR350-3-AA	PSSR350-3-CH-AA	3-1/2	3	4	3-1/4	5/8	1/2
PSSR350-5-AA	PSSR350-5-CH-AA	3-1/2	5	4	3-1/4	5/8	5/8
PSSR400-3-AA	PSSR400-3-CH-AA	4	3	4-1/2	3-1/4	5/8	1/2
PSSR400-5-AA	PSSR400-5-CH-AA	4	5	4-1/2	3-1/4	5/8	5/8

© 2011, AFL, all rights reserved. PP-3-00414, Revision 1, 7.23.13
Specifications are subject to change without notice.

230 kV Aluminum Bolted Bus Supports

DOSSERT®

TYPE PSU-AA

Pipe or Cable Bus Support

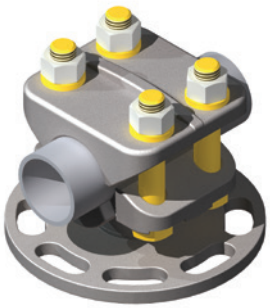

Material

Aluminum Alloy

Hardware

Aluminum nuts, bolts, and lockwashers.
Galvanized steel base mounting hardware is included.

Notes

For base mounting dimensions and hardware see page 3 in the general catalog index.

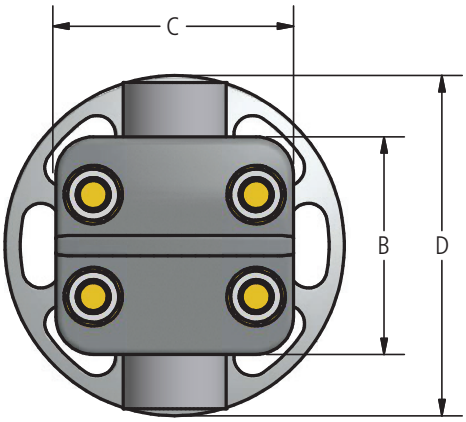

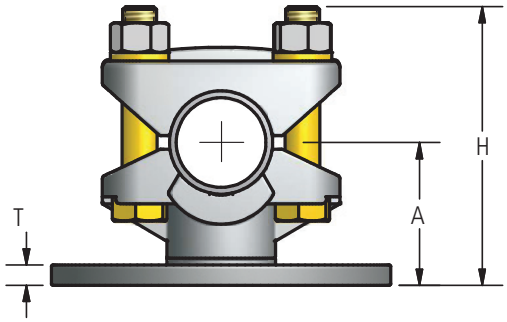

Ordering Information

CATALOG NUMBER	SPS		CABLE RANGE AAC		CABLE RANGE ACSR		BOLT CIRCLE	DIMENSIONS IN INCHES						
	MIN	MAX	MIN	MAX	MIN	MAX		A	B	C	D	H	T	BOLT SIZE
PSU50-3-AA	1/8	1/2	6STR	500MCM	6	336.4	3	2-1/8	3	3-1/8	4-1/4	3-1/2	3/8	1/2
PSU50-5-AA	1/8	1/2	6STR	500MCM	6	336.4	5	2-1/8	3	3-1/8	6-1/4	3-1/2	3/8	1/2
PSU100-3-AA	1/4	1	4/0	1250MCM	4/0	1033.5	3	2-1/4	3-1/2	3-1/2	4-1/4	4-1/4	3/8	1/2
PSU100-5-AA	1/4	1	4/0	1250MCM	4/0	1033.5	5	2-1/4	3-1/2	3-1/2	6-1/4	4-1/4	3/8	1/2
PSU150-3-AA	3/4	1-1/2	850MCM	2500MCM	715.5	2515	3	2-5/8	4	4-3/8	4-1/4	4-3/4	3/8	5/8
PSU150-5-AA	3/4	1-1/2	850MCM	2500MCM	715.5	2515	5	2-5/8	4	4-3/8	6-1/4	4-3/4	3/8	5/8
PSU150-7-AA	3/4	1-1/2	850MCM	2500MCM	715.5	2515	7	2-5/8	4	4-3/8	8-1/2	4-7/8	1/2	5/8
PSU200-3-AA	1-1/4	2	2500MCM	3500MCM	2034	2870	3	2-3/4	4	4-3/8	4-1/4	4-7/8	3/8	5/8
PSU200-5-AA	1-1/4	2	2500MCM	3500MCM	2034	2870	5	2-3/4	4	4-3/8	6-1/4	4-7/8	3/8	5/8

© 2011, AFL, all rights reserved. PP-3-00417, Revision 2, 2.25.19
Specifications are subject to change without notice.

230 kV Aluminum Bolted Bus Supports

DOSSERT®

TYPE PSV-AA

Vertical Pipe Bus Support

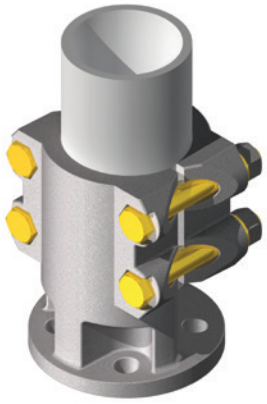

Material

Aluminum Alloy

Hardware

Yellow anodized aluminum nuts, bolts and lockwashers.
Galvanized steel base mounting hardware is included.

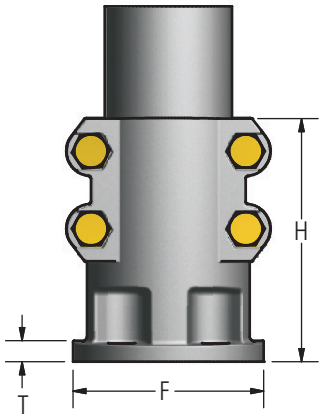

Ordering Information

CATALOG NUMBERS	SPS	BOLT CIRCLE	DIMENSIONS IN INCHES			CANTILEVER FORCE*	
			F	H	T	ALLOWABLE	ULTIMATE
PSV100-3-AA	1	3	4 1/4	4 3/8	3/8	1920	2750
PSV150-3-AA	1 1/2	3	4 1/4	4 3/4	3/8	2000	2880
PSV150-5-AA	1 1/2	5	6 1/4	4 3/4	3/8	4130	5950
PSV200-3-AA	2	3	4 1/4	5 1/2	3/8	2080	2990
PSV200-5-AA	2	5	6 1/4	4 3/4	3/8	4430	6380
PSV250-3-AA	2 1/2	3	4 1/4	5 1/2	13/32	2160	3110
PSV250-5-AA	2 1/2	5	6 1/4	4 3/4	13/32	4590	6610
PSV300-3-AA	3	3	4 1/4	5 5/16	13/32	2240	3230
PSV300-5-AA	3	5	6 1/4	5 5/16	13/32	4870	7010
PSV350-3-AA	3 1/2	3	4 1/4	4 7/8	13/32	2720	3920
PSV350-5-AA	3 1/2	5	6 1/4	5 1/2	13/32	5030	7240
PSV400-3-AA	4	3	4 1/4	4 7/8	13/32	2820	4060
PSV400-5-AA	4	5	6 1/4	5 1/2	13/32	5350	7700

* -Cantilver force is applied at a point on the bus location 2 ft away from the bus support.

© 2011, AFL, all rights reserved. PP-3-00419, 1.12.11
Specifications are subject to change without notice.

DOSSERT®

TYPE SAH-AA, SHH-AA

Horizontal Bus Support For Flat Bus Bars

A horizontal bus support for supporting one or more flat bus bars in a horizontal position. The following supports do not include spacers. The Double Group Type includes a single wide spacer only.

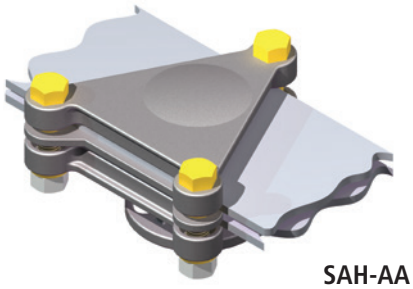

SAH-AA

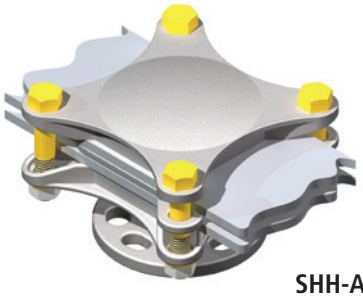

SHH-AA

Material

Aluminum Alloy

Hardware

Yellow anodized aluminum nuts, bolts, and lockwashers.
Galvanized steel base mounting hardware is included.

Note

For more than 2 bars supported; follow the bolt circle number with number of bars to be supported. For example for a 4 inch width bus and a 5 inch bolt circle with 4 bars to be supported order: SAH4-5-4-AA

For bar spacing greater than 1/4" see page 11 for spacers.

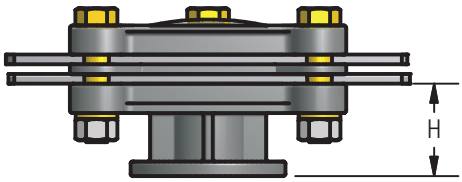

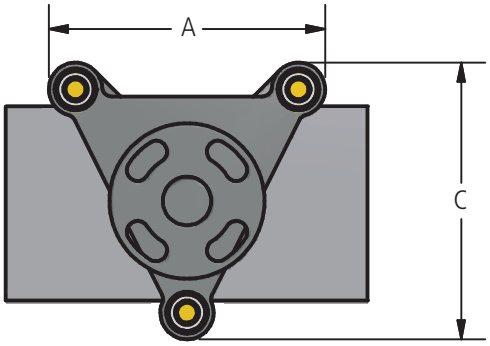

Ordering Information

CATALOG NUMBER				WIDTH OF BUS	BOLT CIRCLE	DIMENSIONS IN INCHES		
SAH SERIES	DOUBLE SPACED	SHH SERIES	DOUBLE SPACED			A	C	H
SAH2-3-AA	SAHD2-3-AA	SHH2-3-AA	SHHD2-3-AA	2	3	3 5/16	3 5/16	2 1/8
SAH2-5-AA	SAHD2-5-AA	SHH2-5-AA	SHHD2-5-AA	2	5	3 5/16	3 5/16	2 3/8
SAH3-3-AA	SAHD3-3-AA	SHH3-3-AA	SHHD3-3-AA	3	3	3 5/16	4 5/16	2 1/8
SAH3-5-AA	SAHD3-5-AA	SHH3-5-AA	SHHD3-5-AA	3	5	3 5/16	4 5/16	2 3/8
SAH4-3-AA	SAHD4-8-AA	SHH4-3-AA	SHHD4-8-AA	4	3	4 3/4	5 3/4	2 1/4
SAH4-5-AA	SAHD4-5-AA	SHH4-5-AA	SHHD4-5-AA	4	5	4 3/4	5 3/4	2 1/2
SAH5-3-AA	SAHD5-3-AA	SHH5-3-AA	SHHD5-3-AA	5	3	5 3/4	6 3/4	2 3/8
SAH5-5-AA	SAHD5-5-AA	SHH5-5-AA	SHHD5-5-AA	5	5	5 3/4	6 3/4	2 5/8
SAH6-3-AA	SAHD6-3-AA	SHH6-3-AA	SHHD6-3-AA	6	3	7 1/8	8 1/8	2 3/8
SAH6-5-AA	SAHD6-5-AA	SHH6-5-AA	SHHD6-5-AA	6	5	7 1/8	8 1/8	2 5/8

© 2011, AFL, all rights reserved. PP-3-00440, 1.12.11
Specifications are subject to change without notice.

DOSSERT®

TYPE SAV-AA, SHV-AA

Vertical Bus Support Clamps

A vertical support clamp for supporting one or more flat bus bars in a vertical or upright position.



SAV-AA

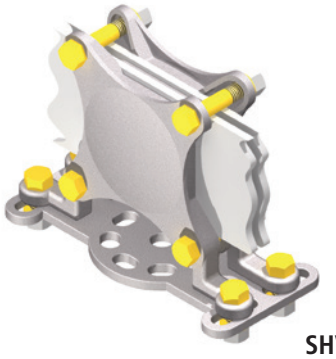

SHV-AA

Material

Aluminum Alloy

Hardware

Yellow anodized aluminum bolts, nuts, and lockwashers.
Galvanized steel base mounting hardware is included.

Note

Double group supports include a single wide spacer only. For more than 2 bars supported; follow the bolt circle number with number of bars to be supported. For example, for a 4 inch width bus and a 5 inch bolt circle with 4 bars to be supportred order: EX: SAV-4-5-4-AA.

For base mounting dimensions and hardware see page 3 in the general catalog index.

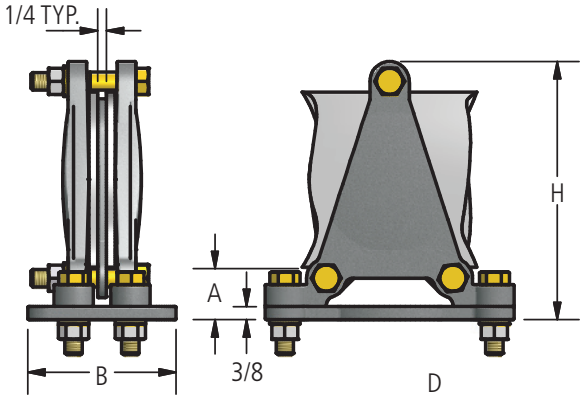

SAV-AA

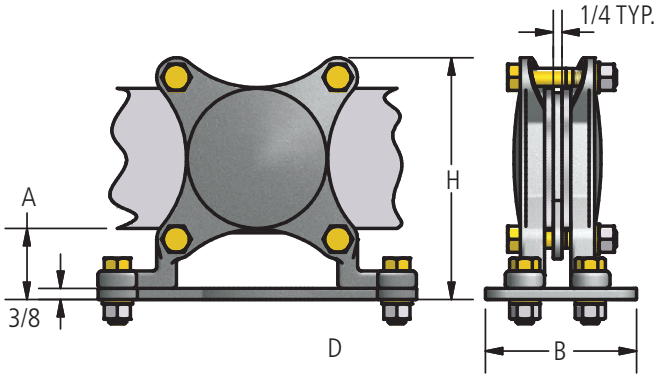

SHV-AA

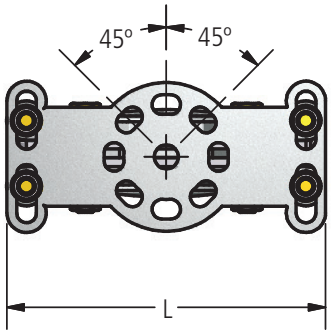

© 2011, AFL, all rights reserved. PP-3-00442, 1.12.11
Specifications are subject to change without notice.

DOSSERT®

TYPE SAV-AA, SHV-AA

Vertical Bus Support Clamps

Ordering Information

CATALOG NUMBER		BOLT CIRCLE	DIMENSIONS IN INCHES					BOLT SIZE
SAV-AA SERIES	SHV-AA SERIES		WIDTH OF BARS	B	A	H	L	
SAV2-3-AA	SHV2-3-AA	3	2	4 1/4	1 3/4	4 7/16	7 1/8	3/8
SAV2-5-AA	SHV2-5-AA	5	2	6 1/4	1 3/4	4 7/16	8 1/8	3/8
SAV3-3-AA	SHV3-3-AA	3	3	4 1/4	1 3/4	5 7/16	7 1/8	3/8
SAV3-5-AA	SHV3-5-AA	5	3	6 1/4	1 3/4	5 7/16	8 1/8	3/8
SAV4-3-AA	SHV4-3-AA	3	4	4 1/4	1 7/8	6 7/8	7 1/8	1/2
SAV4-5-AA	SHV4-5-AA	5	4	6 1/4	1 7/8	6 7/8	8 1/8	1/2
SAV5-3-AA	SHV5-3-AA	3	5	4 1/4	1 7/8	7 7/8	7 1/8	1/2
SAV5-5-AA	SHV5-5-AA	5	5	6 1/4	1 7/8	7 7/8	8 1/8	1/2
SAV6-3-AA	SHV6-3-AA	3	6	4 1/4	1 7/8	8 7/8	7 1/8	1/2
SAV6-5-AA	SHV6-5-AA	5	6	6 1/4	1 7/8	8 7/8	8 1/8	1/2

© 2011, AFL, all rights reserved. PP-3-00442, 1.12.11
Specifications are subject to change without notice.

230 kV Aluminum Bolted Bus Supports

DOSSERT®

TYPE XBC-AA

Aluminum Bus Support Coupler



A bus support coupler is designed to conduct the full rated load of the tubular buses, and at the same time permit free axial movement of each bus member. The shackle type fitting allows slight angular deviation of the buses from the horizontal position where they cannot be kept on a true plane.

Material

Aluminum Alloy

Lamination Material

Pure Aluminum

Hardware

Yellow anodized aluminum nuts, bolts and lockwashers.
Galvanized Steel mounting hardware included.

For base mounting dimensions and hardware see page 3 in the general catalog index.

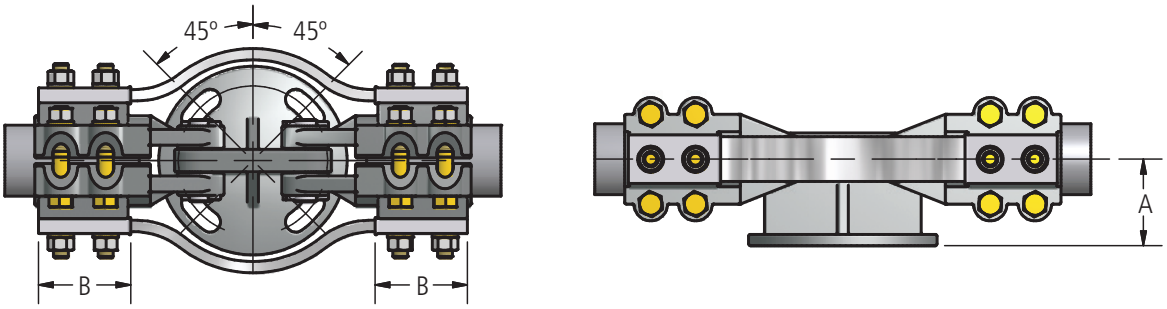

Ordering Information

CATALOG NUMBER	SPS	BOLT CIRCLE	DIMENSIONS IN INCHES		
			A	B	BOLT SIZE
XBC75-3-AA	3/4	3	2	3	1/2
XBC75-5-AA	3/4	5	2-1/4	3	1/2
XBC100-3-AA	1	3	2	3	1/2
XBC100-5-AA	1	5	2-1/4	3	1/2
XBC125-3-AA	1-1/4	3	2-1/4	3	1/2
XBC125-5-AA	1-1/4	5	2-3/8	3	1/2
XBC150-3-AA	1-1/2	3	2-1/2	3	1/2
XBC150-5-AA	1-1/2	5	2-1/2	3	1/2
XBC200-3-AA	2	3	2-3/4	3-1/4	1/2
XBC200-5-AA	2	5	2-3/4	3-1/4	1/2
XBC250-3-AA	2-1/2	3	3-1/8	3-1/4	1/2
XBC250-5-AA	2-1/2	5	3-1/8	3-1/4	1/2
XBC300-3-AA	3	3	3-5/8	3-1/2	5/8
XBC300-5-AA	3	5	3-5/8	3-1/2	5/8
XBC350-3-AA	3-1/2	3	4	3-1/2	5/8
XBC350-5-AA	3-1/2	5	4	3-1/2	5/8
XBC400-3-AA	4	3	4-1/2	3-1/2	5/8
XBC400-5-AA	4	5	4-1/2	3-1/2	5/8
XBC500-5-AA	5	5	5-1/8	3-3/4	5/8
XBC600-5-AA	6	5	5-1/2	3-3/4	5/8

© 2011, AFL, all rights reserved. PP-3-00589, Revision 1, 11.29.18
Specifications are subject to change without notice.

230 kV Aluminum Bolted Bus Supports

DOSSERT®

TYPE XBCW-AA

Expansion Bus Support

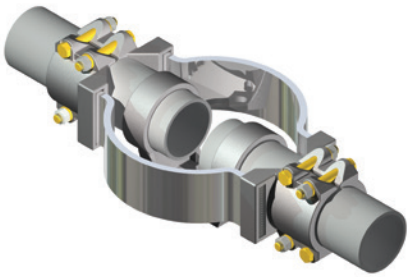

Expansion support is designed to compensate for expansion and contraction during long bus runs. Laminated straps provide for 1.4"of expansion or contraction for pipe sizes 3/4" through 1-1/2" NPS. For pipe sizes 2" through 6" NPS, the straps allow for expansion or contraction of 2.6".

Material

Aluminum Alloy

Hardware

Yellow anodized aluminum bolts, nuts, and lockwashers.
Galvanized steel base mounting hardware is included.

Notes

For base mounting dimensions and hardware, see page 3 in the general information section.

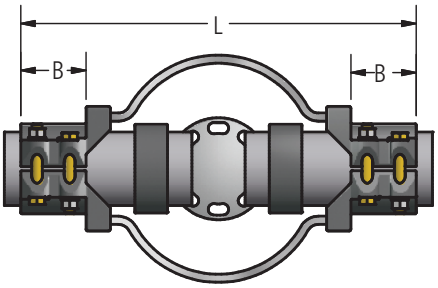

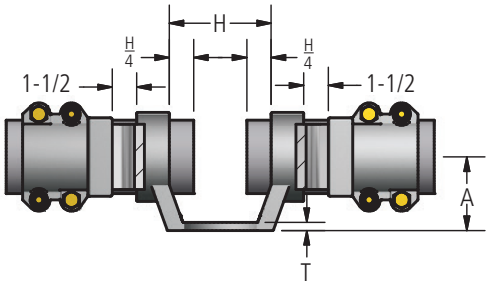

Ordering Information

CATALOG NUMBER		SPS	BOLT CIRCLE	DIMENSIONS IN INCHES					BOLT SIZE
STANDARD	WITH CHATTER SPRING			A	B	H	L	T	
XBCW100-3-AA	XBCW100-3-CH-AA	1	3	2	2-3/4	4-1/2	17	3/8	1/2
XBCW100-5-AA	XBCW100-5-CH-AA	1	5	2-1/4	2-3/4	6-1/4	18-3/4	3/8	1/2
XBCW125-3-AA	XBCW125-3-CH-AA	1-1/4	3	2-1/4	3	4-1/2	17-3/4	3/8	1/2
XBCW125-5-AA	XBCW125-5-CH-AA	1-1/4	5	2-3/8	3	6-1/4	19-1/2	3/8	1/2
XBCW150-3-AA	XBCW150-3-CH-AA	1-1/2	3	2-1/2	3	4-1/2	18	3/8	1/2
XBCW150-5-AA	XBCW150-5-CH-AA	1-1/2	5	2-1/2	3	6-1/4	19-3/4	3/8	1/2
XBCW200-3-AA	XBCW200-3-CH-AA	2	3	2-3/4	3-1/4	4-1/2	19-1/8	3/8	1/2
XBCW200-5-AA	XBCW200-5-CH-AA	2	5	2-3/4	3-1/4	6-1/4	20-7/8	3/8	1/2
XBCW250-3-AA	XBCW250-3-CH-AA	2-1/2	3	3-1/8	3-1/4	4-1/2	19-1/8	3/8	1/2
XBCW250-5-AA	XBCW250-5-CH-AA	2-1/2	5	3-1/8	3-1/4	6-1/4	20-7/8	3/8	1/2
XBCW300-3-AA	XBCW300-3-CH-AA	3	3	3-5/8	3-1/2	4-1/2	19-5/8	7/16	5/8
XBCW300-5-AA	XBCW300-5-CH-AA	3	5	3-5/8	3-1/2	6-1/4	21-3/8	7/16	5/8
XBCW350-3-AA	XBCW350-3-CH-AA	3-1/2	3	4	3-1/2	4-1/2	19-7/8	1/2	5/8
XBCW350-5-AA	XBCW350-5-CH-AA	3-1/2	5	4	3-1/2	6-1/4	21-5/8	1/2	5/8
XBCW350-7-AA	XBCW350-7-CH-AA	3-1/2	7	4	3-1/2	8-3/4	23-5/8	1/2	5/8
XBCW400-3-AA	XBCW400-3-CH-AA	4	3	4-1/2	3-3/4	5	21	1/2	5/8
XBCW400-5-AA	XBCW400-5-CH-AA	4	5	4-1/2	3-3/4	6-1/4	22-3/4	1/2	5/8
XBCW400-7-AA	XBCW400-7-CH-AA	4	7	4	3	8-3/4	27	1/2	5/8
XBCW500-3-AA	XBCW500-3-CH-AA	5	3	5	4	4-1/2	21-1/2	1/2	5/8
XBCW500-5-AA	XBCW500-5-CH-AA	5	5	5	4	6-1/4	23-1/4	1/2	5/8
XBCW500-7-AA	XBCW500-7-CH-AA	5	7	5	4	8-3/4	27	1/2	5/8
XBCW600-3-AA	XBCW600-3-CH-AA	6	3	5-1/2	4	4-1/2	21-1/2	1/2	5/8
XBCW600-5-AA	XBCW600-5-CH-AA	6	5	5-1/2	4	6-1/4	23-1/4	1/2	5/8
XBCW600-7-AA	XBCW600-7-CH-AA	6	7	5-1/2	4	8-3/4	27	1/2	5/8

© 2011, AFL, all rights reserved. PP-3-00581, Rev 1, 7.23.13
Specifications are subject to change without notice.

DOSSERT®

TYPE BCX-AA

Variable Cable Tee Tap and Straight Connector



A clamp type tee connector, or reducer connector for joining two cables. This connector allows for multiple applications, and the variable cable tap and coupler accepts a wide range of conductor sizes. High conductivity Aluminum alloy body plus well balanced conductive and contact areas make for cool operation under all load conditions

Material

Aluminum Alloy

Hardware

Yellow anodized aluminum nuts, bolts and lockwashers.

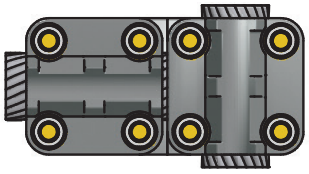

TAP CONFIGURATION

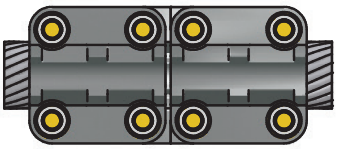

COUPLER OR REDUCER CONFIGURATION

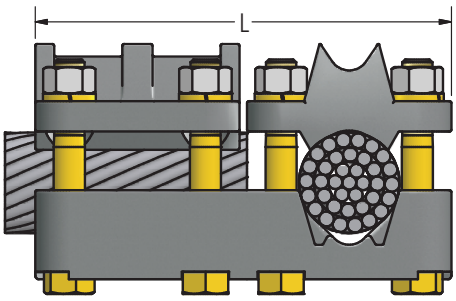

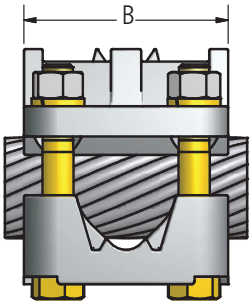

Ordering Information

CATALOG NUMBER	CONDUCTOR RANGE					SPS		DIMENSIONS IN INCHES	
	ACSR OR AAC	TAP		RUN		TAP	RUN		
		MIN	MAX	MIN	MAX			B	L
BCX100-100-AA	AAC	#2 SOL.	1000 MCM	#2 SOL.	1000 MCM	3/8 - 3/4	3/8 - 3/4	2 7/8	5 7/8
	ACSR	4(7/1)	900(36/1)	4(7/1)	900(36/1)				
BCX200-200-AA	AAC	4/0 STR.	2000 MCM	4/0 STR.	2000 MCM	3/8 - 1 1/4	3/8 - 1 1/4	3 3/8	6 7/8
	ACSR	4/0(6/1)	1780(84/19)	4/0(6/1)	1780(84/19)				
BCX350-200-AA	AAC	SEE TABLE 2							8 3/8
	ACSR								
BCX350-350-AA	AAC	795 MCM	3500 MCM	2000 MCM	3500MCM	-	-	4 1/2	10 1/2
	ACSR	795(54/7)	2515(76/19)	795(54/7)	2515(76/19)				

TABLE 2							
CATALOG NUMBER	CONDUCTOR RANGE					DIMENSIONS IN INCHES	
	ACSR OR AAC	200 SIDE (TAP)		350 SIDE (RUN)		B	
		MIN	MAX	MIN	MAX	TAP	RUN
BCX350-200-AA	AAC	4/0 STR.	2000 MCM	795 MCM	3500 MCM	3 3/8	4 1/2
	ACSR	4/0(6/1)	1780(84/19)	795(54/7)	2515(76/19)		

© 2011, AFL, all rights reserved. PP-3-00133, Revision 1. 9.20.11
Specifications are subject to change without notice.

230 kV Aluminum Bolted Couplers

DOSSERT®

TYPE CCV-AA

Aluminum Bolted Cable Coupler

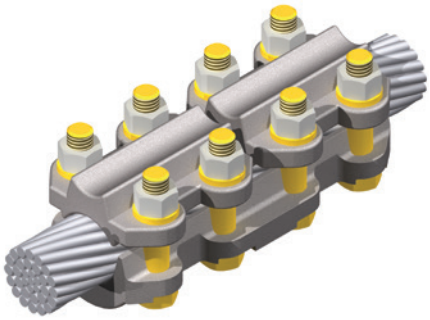

A cable to cable heavy duty variable type coupler. Each cable holding section accommodates a wide range of cable sizes.

Material

Aluminum Alloy

Hardware

Yellow anodized aluminum nuts, bolts and lockwashers.

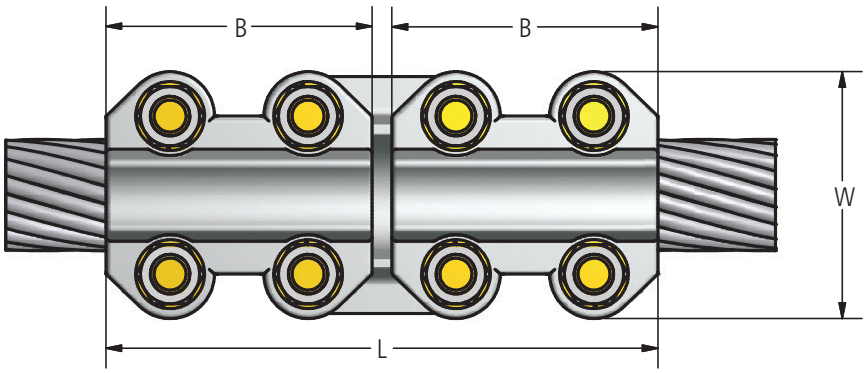

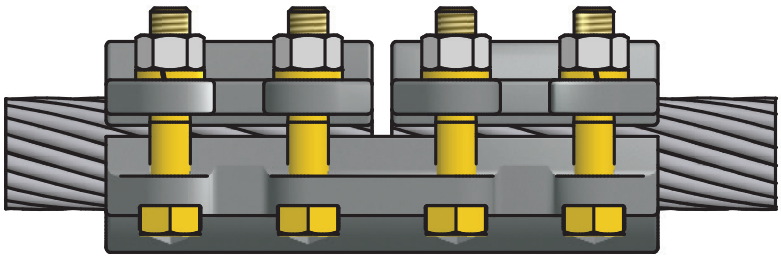

Ordering Information

CATALOG NUMBER	AAC CABLE RANGE		ACSR CABLE RANGE		DIMENSIONS IN INCHES			BOLT SIZE
	MIN	MAX	MIN	MAX	B	L	W	
CCV10-AA	4	1/0	4	1/0	1 7/8	4	2 1/4	1/2
CCV25-AA	1/0	250	1/0	4/0	3	6 1/4	2 5/16	1/2
CCV40-AA	250	400	4/0	397.5	3	6 1/4	2 1/2	1/2
CCV60-AA	350	600	336.4	477	3	6 1/4	2 11/16	1/2
CCV90-AA	500	900	477	795	3	6 1/4	2 7/8	1/2
CCV125-AA	900	1250	715	1113	3 1/4	6 3/4	3 1/16	1/2
CCV160-AA	1250	1600	1113	1431	4 3/8	9	3 5/8	5/8
CCV200-AA	1500	2000	1272	1780	4 1/2	9 1/4	3 3/4	5/8
CCV250-AA	2000	2500	1780	2300	4 1/2	9 1/4	5 15/16	5/8
CCV300-AA	2500	3000	2515	2515	4 1/2	9 1/4	5 15/16	5/8

© 2011, AFL, all rights reserved. PP-3-00275, 1.16.11
Specifications are subject to change without notice.

DOSSERT®

TYPE CP-AA
Pipe Coupler



Material
Aluminum Alloy

Hardware
Yellow anodized aluminum nuts, bolts and lockwashers.

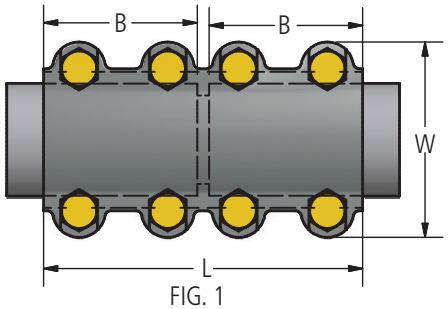

FIG. 1

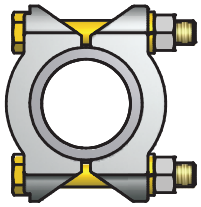

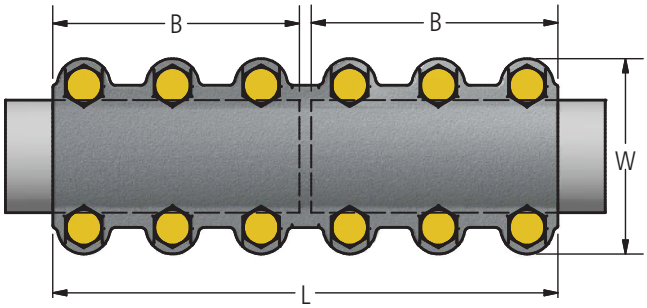

FIG. 2

Ordering Information

CATALOG NUMBER	SPS OR EHPS	FIGURE NUMBER	DIMENSIONS IN INCHES			BOLT SIZE
			B	L	W	
CP50-AA	1/2	1	2 1/2	5 1/4	2 9/16	1/2
CP75-AA	3/4	1	2 3/4	5 3/4	2 3/4	1/2
CP100-AA	1	1	2 3/4	5 3/4	3 1/16	1/2
CP125-AA	1 1/4	1	3	6 1/4	3 7/16	1/2
CP150-AA	1 1/2	1	3	6 1/4	3 11/16	1/2
CP200-AA	2	1	3 1/4	6 3/4	4 1/8	1/2
CP250-AA	2 1/2	1	3 1/4	6 3/4	4 5/8	1/2
CP300-AA	3	1	3 3/4	7 3/4	5 5/8	5/8
CP350-AA	3 1/2	1	4	8 1/4	6 1/8	5/8
CP400-AA	4	1	4 1/2	9 1/4	6 5/8	5/8
CP500-AA	5	2	7	14 1/4	7 11/16	5/8
CP600-AA	6	2	7	14 1/4	8 3/4	5/8
CP800R-AA	8 O.D.	2	6 3/16	12 5/8	10 1/8	5/8

© 2011, AFL, all rights reserved. PP-3-00288, Revision 1, 12.3.18
Specifications are subject to change without notice.

230 kV Aluminum Bolted Couplers

DOSSERT®

TYPE RCV-AA

Aluminum Reducing Cable Coupler

Reducing Cable Coupler



Material

Aluminum Alloy

Hardware

Yellow anodized aluminum nuts, bolts and lockwashers.

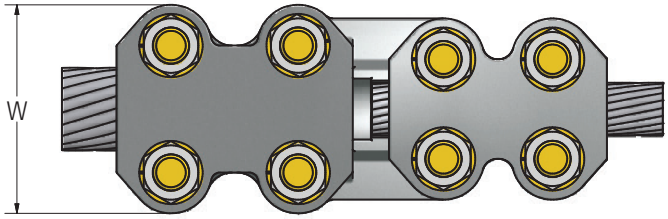

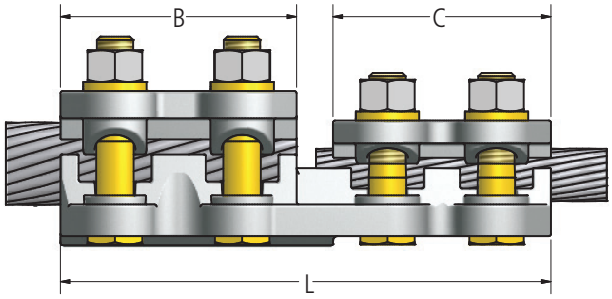

Ordering Information

CATALOG NUMBER	CABLE RANGE RUN ACSR		CABLE RANGE RUN AAC		CABLE RANGE TAP ACSR		CABLE RANGE TAP AAC		DIMENSIONS IN INCHES				BOLT SIZE RUN	BOLT SIZE TAP
	MIN	MAX	MIN	MAX	MIN	MAX	MIN	MAX	B	C	L	W		
RCV25-10-AA	1/0(6/1)	250MCM	1/0STR	4/0(6/1)	4STR	1/0(6/1)	4STR	1/0STR	3	1 7/8	5 1/2	2 5/16	1/2	1/2
RCV40-10-AA	4/0(6/1)	400MCM	250MCM	397.5(18/1)	4STR	1/0(6/1)	4STR	1/0STR	3	1 7/8	5 1/2	2 1/2	1/2	1/2
RCV40-25-AA	4/0(6/1)	400MCM	250MCM	397.5(18/1)	1/0STR	4/0(6/1)	1/0STR	250MCM	3	3	6 5/8	2 1/2	1/2	1/2
RCV60-25-AA	336.4(18/1)	600MCM	350MCM	477(30/7)	1/0STR	4/0(6/1)	1/0STR	250MCM	3	3	6 5/8	2 11/16	1/2	1/2
RCV60-40-AA	336.4(18/1)	600MCM	350MCM	477(30/7)	4/0(6/1)	397.5(18/1)	250MCM	400MCM	3	3	6 5/8	2 11/16	1/2	1/2
RCV90-25-AA	477(30/7)	900MCM	600MCM	795(54/7)	1/0(6/1)	4/0(6/1)	1/0STR	250MCM	3	3	6 5/8	2 7/8	1/2	1/2
RCV90-40-AA	477(30/7)	900MCM	600MCM	795(54/7)	4/0(6/1)	397.5(18/1)	250MCM	400MCM	3	3	6 5/8	2 7/8	1/2	1/2
RCV90-60-AA	477(30/7)	900MCM	600MCM	795(54/7)	336.4(18/1)	477(30/7)	350MCM	600MCM	3	3	6 5/8	2 7/8	1/2	1/2
RCV125-25-AA	715(30/19)	1250MCM	900MCM	1113(54/19)	1/0(6/1)	795(54/7)	1/0STR	250MCM	3 1/4	3	6 7/8	3 1/16	1/2	1/2
RCV125-40-AA	715(30/19)	1250MCM	900MCM	1113(54/19)	4/0(6/1)	397.5(18/1)	250MCM	400MCM	3 1/4	3	6 7/8	3 1/16	1/2	1/2
RCV125-60-AA	715(30/19)	1250MCM	900MCM	1113(54/19)	336.4(18/1)	477(30/7)	350MCM	600MCM	3 1/4	3	6 7/8	3 1/16	1/2	1/2
RCV125-90-AA	715(30/19)	1250MCM	900MCM	1113(54/19)	477(30/7)	795(54/7)	600MCM	900MCM	3 1/4	3	6 7/8	3 1/16	1/2	1/2
RCV160-25-AA	1113(54/19)	1600MCM	1250MCM	1431(54/7)	1/0(6/1)	795(54/7)	1/0STR	250MCM	4 3/8	3	7	3 5/8	5/8	1/2
RCV160-40-AA	1113(54/19)	1600MCM	1250MCM	1431(54/7)	4/0(6/1)	397.5(18/1)	250MCM	400MCM	4 3/8	3	7	3 5/8	5/8	1/2
RCV160-60-AA	1113(54/19)	1600MCM	1250MCM	1431(54/7)	336.4(18/1)	477(30/7)	350MCM	600MCM	4 3/8	3	7	3 5/8	5/8	1/2
RCV160-90-AA	1113(54/19)	1600MCM	1250MCM	1431(54/7)	477(30/7)	795(54/7)	600MCM	900MCM	4 3/8	3	7	3 5/8	5/8	1/2
RCV160-125-AA	1113(54/19)	1600MCM	1250MCM	1431(54/7)	715(30/19)	1113(54/19)	900MCM	1250MCM	4 3/8	3 1/4	7 1/4	3 5/8	5/8	1/2
RCV200-60-AA	1272(54/19)	2000MCM	1500MCM	1780(87/19)	336.4(18/1)	477(30/7)	350MCM	600MCM	4 1/2	3	8 1/8	3 3/4	5/8	1/2
RCV200-90-AA	1272(54/19)	2000MCM	1500MCM	1780(87/19)	477(30/7)	795(54/7)	600MCM	900MCM	4 1/2	3	8 1/8	3 3/4	5/8	1/2
RCV200-125-AA	1272(54/19)	2000MCM	1500MCM	1780(87/19)	715(30/19)	1113(54/19)	900MCM	1250MCM	4 1/2	3 1/4	8 3/8	3 3/4	5/8	1/2
RCV200-160-AA	1272(54/19)	2000MCM	1500MCM	1780(87/19)	1113(54/19)	1431(54/7)	1250MCM	1600MCM	4 1/2	4 3/8	9 1/2	3 3/4	5/8	5/8
RCV250-60-AA	1780(84/19)	2500MCM	2000MCM	2300(96/19)	336.4(18/1)	477(30/7)	350MCM	600MCM	4 1/2	3	8 1/8	3 15/16	5/8	1/2
RCV250-90-AA	1780(84/19)	2500MCM	2000MCM	2300(96/19)	477(30/7)	795(54/7)	600MCM	900MCM	4 1/2	3	8 1/8	3 15/16	5/8	1/2
RCV250-125-AA	1780(84/19)	2500MCM	2000MCM	2300(96/19)	715(30/19)	1113(54/19)	900MCM	1250MCM	4 1/2	3 1/4	8 3/8	3 15/16	5/8	1/2
RCV250-160-AA	1780(84/19)	2500MCM	2000MCM	2300(96/19)	1113(54/19)	1431(54/7)	1250MCM	1600MCM	4 1/2	4 3/8	9 1/5	3 15/16	5/8	5/8
RCV250-200-AA	1780(84/19)	2500MCM	2000MCM	2300(96/19)	1272(54/19)	1780(84/19)	1500MCM	2000MCM	4 1/2	4 1/2	9 5/8	3 15/16	5/8	5/8

© 2011, AFL, all rights reserved. PP-3-00427, 1.16.11
Specifications are subject to change without notice.

230 kV Aluminum Bolted Couplers

DOSSERT®

TYPE RP-AA

Aluminum Reducing Clamp for Tubular Bus

A clamp type reducing coupler for connecting various sizes of standard pipe size tubular buses end to end. Contact surfaces are finished to provide a strong grip on the conductor and good electrical contact.

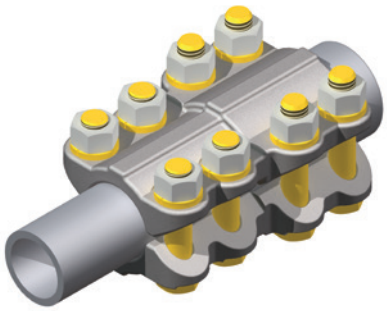

Material

Aluminum Alloy

Hardware

Yellow anodized aluminum nuts, bolts and lockwashers.

Ordering Information

CATALOG NUMBER	SPS		DIMENSIONS IN INCHES		
	RUN	TAP	B	C	L
RP75-50-AA	3/4	1/2	2-3/4	2-1/2	5-7/8
RP100-50-AA	1	1/2	2-3/4	2-1/2	5-7/8
RP100-75-AA	1	3/4	2-3/4	2-3/4	6-1/8
RP125-50-AA	1-1/4	1/2	3	2-1/2	6-1/8
RP125-75-AA	1-1/4	3/4	3	2-3/4	6-3/8
RP125-100-AA	1-1/4	1	3	2-3/4	6-3/8
RP150-75-AA	1-1/2	3/4	3	2-3/4	6-3/8
RP150-100-AA	1-1/2	1	3	2-3/4	6-3/8
RP150-125-AA	1-1/2	1-1/4	3	3	6-5/8
RP200-75-AA	2	3/4	3-1/4	2-3/4	6-5/8
RP200-100-AA	2	1	3-1/4	2-3/4	6-5/8
RP200-125-AA	2	1-1/4	3-1/4	3	6-7/8
RP200-150-AA	2	1-1/2	3-1/4	3	6-7/8
RP250-75-AA	2-1/2	3/4	3-1/4	2-3/4	6-5/8
RP250-100-AA	2-1/2	1	3-1/4	2-3/4	6-5/8
RP250-125-AA	2-1/2	1-1/4	3-1/4	3	6-7/8
RP250-150-AA	2-1/2	1-1/2	3-1/4	3	6-7/8
RP250-200-AA	2-1/2	1-1/2	3-1/4	3-1/4	7-1/4
RP300-100R-AA	3	1 O.D.	3-1/4	2-3/4	6-3/4
RP300-100-AA	3	1	3-1/4	2-3/4	6-3/4
RP300-125-AA	3	1-1/4	3-1/4	3	7
RP300-150-AA	3	1-1/2	3-1/4	3	7
RP300-200-AA	3	2	3-1/4	3-1/4	7-1/4
RP300-250-AA	3	2-1/2	3-1/4	3-1/4	7-1/4
RP350-125-AA	3-1/2	1-1/4	3-1/4	3-1/4	8-1/4
RP350-150-AA	3-1/2	1-1/2	3-1/4	3	7
RP350-200-AA	3-1/2	2	3-1/4	3-1/4	7-1/4
RP350-250-AA	3-1/2	2-1/2	3-1/4	3-1/4	7-1/4
RP350-300-AA	3-1/2	3	3-3/4	3-3/4	8-1/4
RP400-150-AA	4	1-1/2	3-1/4	3	7
RP400-200-AA	4	2	3-1/4	3-1/4	7-1/4
RP400-250-AA	4	2-1/2	3-1/4	3-1/4	7-1/4
RP400-300-AA	4	3	3-3/4	3-3/4	8-1/4
RP400-350-AA	4	3-1/2	3-3/4	3-1/2	7-1/2
RP500-200-AA	5	2	3-1/2	3-1/4	7-1/2
RP500-250-AA	5	2-1/2	3-1/2	3-1/4	7-1/2
RP500-300-AA	5	3	3-3/4	3-3/4	8-1/2
RP500-350-AA	5	3-1/2	3-3/4	3-1/2	7-1/2
RP500-400-AA	5	4	3-3/4	3-3/4	7-7/8
RP600-200-AA	6	2	3-1/2	3-1/4	7-1/2
RP600-250-AA	6	2-1/2	3-1/2	3-1/4	7-1/2
RP600-300-AA	6	3	4	3-3/4	8-5/8
RP600-350-AA	6	3-1/2	4	3-3/4	8-5/8
RP600-400-AA	6	4	4	3-3/4	8-5/8
RP600-500-AA	6	5	6	6	12-7/8

This part comes with 12 bolts and 12 nuts and lockwashers

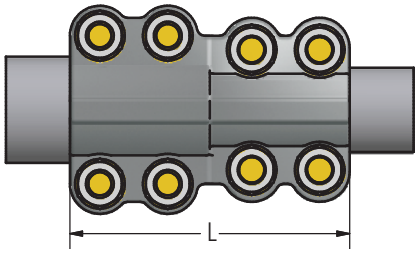

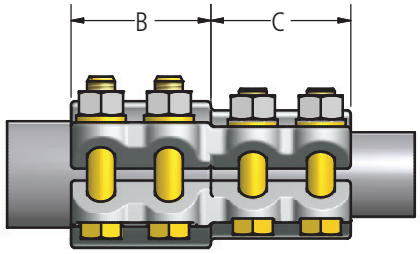

© 2011, AFL, all rights reserved. PP-3-00432, Revision 2, 3.28.2023
Specifications are subject to change without notice.

230 kV Aluminum Bolted Couplers

DOSSERT®

TYPE RPCV-AA

Aluminum Pipe to Cable Coupler

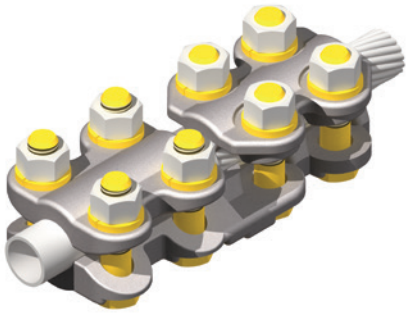

A pipe to cable coupler which takes a wide range of cable sizes on the cable clamping member. All clamping members act independently.

Material

Aluminum Alloy

Hardware

Aluminum nuts, bolts and lockwashers.

Notes

- For Electro Tin plate, add "-SN" to catalog number. EX: RPCV75-90-AA-SN
- For Grade Five Galvanized Steel Hardware add "-GS5" to catalog number. EX: RPCV75-90-AA-GS5
- For Stainless Steel bolts, lockwashers and Everdur nuts, add "-SSHBN" to catalog number. EX: RPCV75-90-AA-SSHBN

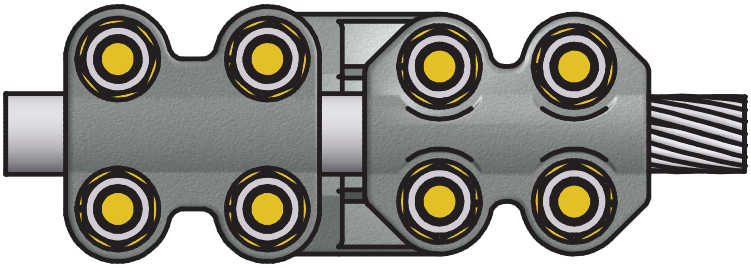

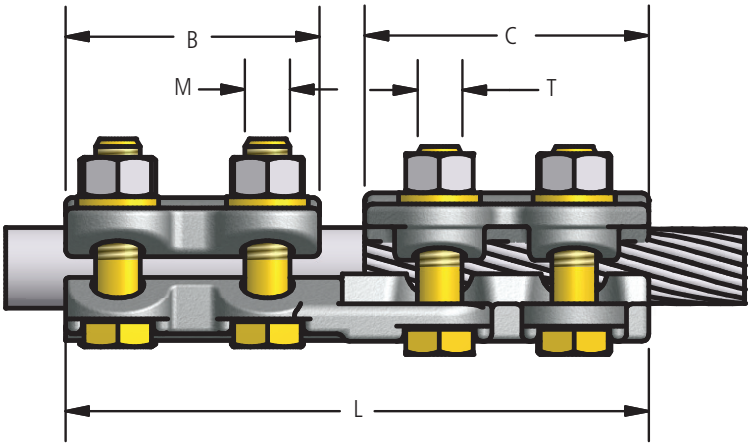

© 2011, AFL, all rights reserved. PP-3-00433, Revision 2, 2.1.19
Specifications are subject to change without notice.

DOSSERT®

TYPE RPCV-AA

Aluminum Pipe to Cable Coupler

Ordering Information

CATALOG NUMBER	SPS	CABLE RANGE AAC		CABLE RANGE ACSR		DIMENSIONS IN INCHES			BOLT SIZE	
		MIN	MAX	MIN	MAX	B	C	L	M	T
RPCV75-25-AA	3/4	1/0STR	250MCM	1/0STR	4/0STR	2 3/4	3	6 3/8	1/2	1/2
RPCV75-40-AA	3/4	250MCM	400MCM	4/0STR	397.5 MCM	2 3/4	3	6 3/8	1/2	1/2
RPCV75-60-AA	3/4	350MCM	600MCM	336.4 MCM	477MCM	2 3/4	3	6 3/8	1/2	1/2
RPCV75-90-AA	3/4	500MCM	900MCM	477MCM	795MCM	2 3/4	3	6 3/8	1/2	1/2
RPCV100-25-AA	1	1/0STR	250MCM	1/0STR	4/0STR	2 3/4	3	6 3/8	1/2	1/2
RPCV100-40-AA	1	250MCM	400MCM	4/0STR	397.5 MCM	2 3/4	3	6 3/8	1/2	1/2
RPCV100-60-AA	1	350MCM	600MCM	366.4 MCM	477MCM	2 3/4	3	6 3/8	1/2	1/2
RPCV100-90-AA	1	500MCM	900MCM	477MCM	795MCM	2 3/4	3	6 3/8	1/2	1/2
RPCV118R-25-AA	30mm	1/0STR	250MCM	1/0STR	4/0STR	2 3/4	3	6 3/8	1/2	1/2
RPCV118R-40-AA	30mm	250MCM	400MCM	4/0STR	397.5 MCM	2 3/4	3	6 3/8	1/2	1/2
RPCV118R-90-AA	30mm	500MCM	900MCM	477MCM	795MCM	2 3/4	3	6 5/8	1/2	1/2
RPCV118R-125-AA	30mm	900MCM	1250MCM	715MCM	1113MCM	2 3/4	3 1/4	6 5/8	1/2	1/2
RPCV125-25-AA	1 1/4	1/0STR	250MCM	1/0STR	4/0STR	3	3	6 5/8	1/2	1/2
RPCV125-40-AA	1 1/4	250MCM	400MCM	4/0STR	397.5 MCM	3	3	6 5/8	1/2	1/2
RPCV125-60-AA	1 1/4	350MCM	600MCM	336.4 MCM	477MCM	3	3	6 5/8	1/2	1/2
RPCV125-90-AA	1 1/4	500MCM	900MCM	477MCM	795MCM	3	3	6 5/8	1/2	1/2
RPCV125-125-AA	1 1/4	900MCM	1250MCM	715MCM	1113MCM	3	3 1/4	6 5/8	1/2	1/2
RPCV150-25-AA	1 1/2	1/0STR	250MCM	1/0STR	4/0STR	3	3	6 5/8	1/2	1/2
RPCV150-40-AA	1 1/2	250MCM	400MCM	4/0STR	397.5 MCM	3	3	6 5/8	1/2	1/2
RPCV150-60-AA	1 1/2	350MCM	600MCM	336.4 MCM	477MCM	3	3	6 5/8	1/2	1/2
RPCV150-90-AA	1 1/2	500MCM	900MCM	477MCM	795MCM	3	3	6 5/8	1/2	1/2
RPCV150-125-AA	1 1/2	900MCM	1250MCM	715MCM	1113MCM	3	3 1/4	6 7/8	1/2	1/2
RPCV150-160-AA	1 1/2	1250MCM	1600MCM	1113MCM	1431MCM	3	4 3/8	7 3/4	1/2	5/8
RPCV200-25-AA	2	1/0STR	250MCM	1/0STR	4/0STR	3 1/4	3	6 7/8	1/2	1/2
RPCV200-40-AA	2	250MCM	400MCM	4/0STR	397.5 MCM	3 1/4	3	6 7/8	1/2	1/2
RPCV200-60-AA	2	350MCM	600MCM	366.4 MCM	477MCM	3 1/4	3	6 7/8	1/2	1/2
RPCV200-90-AA	2	500MCM	900MCM	477MCM	795MCM	3 1/4	3	6 7/8	1/2	1/2
RPCV200-125-AA	2	900MCM	1250MCM	715MCM	1113MCM	3 1/4	3 1/4	7 1/8	1/2	1/2
RPCV200-160-AA	2	1250MCM	1600MCM	1113MCM	1431MCM	3 1/4	4 3/4	8 1/4	1/2	5/8
RPCV200-200-AA	2	1500MCM	2000MCM	1272MCM	1780MCM	3 1/4	4 1/2	8 3/8	1/2	5/8
RPCV250-25-AA	2 1/2	1/0STR	250MCM	1/0STR	4/0STR	3 1/4	3	6 7/8	1/2	1/2
RPCV250-40-AA	2 1/2	250MCM	400MCM	4/0STR	397.5 MCM	3 1/4	3	6 7/8	1/2	1/2
RPCV250-60-AA	2 1/2	350MCM	600MCM	366.4 MCM	477MCM	3 1/4	3	6 7/8	1/2	1/2
RPCV250-90-AA	2 1/2	500MCM	900MCM	477MCM	795MCM	3 1/4	3	6 7/8	1/2	1/2
RPCV250-125-AA	2 1/2	900MCM	1250MCM	715MCM	1113MCM	3 1/4	3 1/4	7 1/8	1/2	1/2
RPCV250-160-AA	2 1/2	1250MCM	1600MCM	1113MCM	1431MCM	3 1/2	4 3/8	8 1/2	5/8	5/8
RPCV300-25-AA	3	1/0STR	250MCM	1/0STR	4/0STR	3 1/4	3	6 7/8	1/2	1/2
RPCV300-40-AA	3	250MCM	400MCM	4/0STR	397.5 MCM	3 1/4	3	6 7/8	1/2	1/2
RPCV300-60-AA	3	350MCM	600MCM	336.4 MCM	477MCM	3 1/4	3	6 7/8	1/2	1/2
RPCV300-90-AA	3	500MCM	900MCM	477MCM	795MCM	3 1/4	3	6 7/8	1/2	1/2
RPCV300-125-AA	3	900MCM	1250MCM	715MCM	1113MCM	3 1/4	3 1/4	7 1/8	1/2	1/2
RPCV300-160-AA	3	1250MCM	1600MCM	1113MCM	1431MCM	3 3/4	4 3/8	8 3/4	5/8	5/8
RPCV300-200-AA	3	1500MCM	2000MCM	1272MCM	1780MCM	3 3/4	4 1/2	8 7/8	5/8	5/8
RPCV300-250-AA	3	2000MCM	2500MCM	1780 MCM	2300 MCM	3 3/4	4 1/2	8 7/8	5/8	5/8
RPCV300-350-AA	3	3000 MCM	3500 MCM	—	—	3 3/4	4 1/2	8 7/8	5/8	5/8
RPCV350-40-AA	3 1/2	250MCM	400MCM	4/0STR	397.5 MCM	3 1/4	3	6 7/8	1/2	1/2
RPCV350-60-AA	3 1/2	350MCM	600MCM	336.4 MCM	477MCM	3 1/4	3	6 7/8	1/2	1/2
RPCV350-90-AA	3 1/2	500MCM	900MCM	477MCM	795MCM	3 1/4	3	6 7/8	1/2	1/2
RPCV350-125-AA	3 1/2	900MCM	1250MCM	715MCM	1113MCM	3 1/4	3 1/4	7 1/8	1/2	1/2
RPCV350-160-AA	3 1/2	1250MCM	1600MCM	1113MCM	1431MCM	3 3/4	4 3/8	8 3/4	5/8	5/8
RPCV350-200-AA	3 1/2	1500MCM	2000MCM	1272MCM	1780MCM	3 3/4	4 1/2	8 7/8	5/8	5/8
RPCV400-40-AA	4	250MCM	400MCM	4/0STR	397.5 MCM	3 3/4	3	6 7/8	1/2	1/2
RPCV400-60-AA	4	350MCM	600MCM	336.4 MCM	477MCM	3 3/4	3	6 7/8	1/2	1/2
RPCV400-90-AA	4	500MCM	900MCM	477MCM	795MCM	3 3/4	3	6 7/8	1/2	1/2
RPCV400-125-AA	4	900MCM	1250MCM	715MCM	1113MCM	3 3/4	3 1/4	7 3/4	1/2	1/2
RPCV400-160-AA	4	1250MCM	1600MCM	1113MCM	1431MCM	3 3/4	4 3/8	8 3/4	5/8	5/8
RPCV400-200-AA	4	1500MCM	2000MCM	1272MCM	1780MCM	3 3/4	4 1/2	8 7/8	5/8	5/8
RPCV400-250-AA	4	2000 MCM	2500 MCM	1780 MCM	2300 MCM	3 3/4	4 1/2	9	5/8	5/8
RPCV500-60-AA	5	350MCM	600MCM	336.4 MCM	477MCM	3 1/4	3	6 7/8	1/2	1/2
RPCV500-90-AA	5	500MCM	900MCM	477MCM	795MCM	3 1/4	3	6 7/8	1/2	1/2
RPCV500-125-AA	5	900MCM	1250MCM	715MCM	1113MCM	3 1/4	3 1/4	7 1/8	1/2	1/2
RPCV500-160-AA	5	1250MCM	1600MCM	1113MCM	1431MCM	7	4 3/8	11 3/4	5/8	5/8
RPCV500-200-AA	5	1500MCM	2000MCM	1272MCM	1780MCM	3 3/4	4 1/2	8 7/8	5/8	5/8

© 2011, AFL, all rights reserved. PP-3-00433, Revision 2, 2.1.19
Specifications are subject to change without notice.

230 kV Aluminum Bolted Couplers

DOSSERT®

TYPE UK-AA

Aluminum U-Bolt Coupler



A U-Bolt type straight connector for coupling end to end two cables. Each half of the connector takes a wide range of cable sizes. Designed to provide high contact pressure on all cable sizes.

Material

Aluminum Alloy

Hardware

Yellow anodized aluminum nuts, U-bolts and lockwashers.

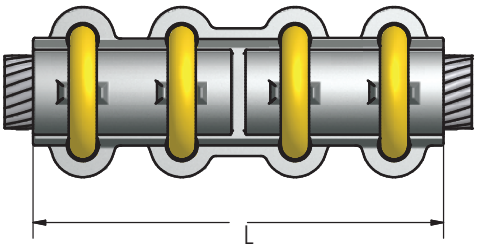

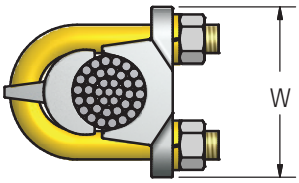

Ordering Information

CATALOG NUMBER	AAC CABLE RANGE		DIMENSIONS IN INCHES		U-BOLT SIZE
	MIN	MAX	L	W	
UK13-AA	6	#2/0	6 1/4	2 1/16	1/2
UK21-AA	1	#4/0	6 1/4	2 7/32	1/2
UK30-AA	#1/0	300	6 3/4	2 5/16	1/2
UK50-AA	300	500	7 1/4	2 1/2	1/2
UK90-AA	500	900	7 1/4	2 25/32	1/2
UK100-AA	750	1000	7 1/4	2 27/32	1/2
UK125-AA	600	1250	7 1/4	3	1/2
UK150-AA	1000	1500	9 1/4	3 11/32	5/8
UK200-AA	1500	2000	9 1/4	3 5/8	5/8

© 2011, AFL, all rights reserved. PP-3-00494, Revision 1, 7.23.13
Specifications are subject to change without notice.

DOSSERT®

TYPE UKR-AA

Aluminum U-Bolt Coupler Reducer

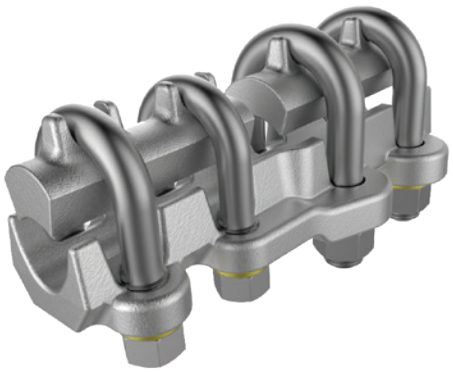

A U-Bolt type reducer connector for coupling end to end two unequal size cables. The variability of each half of the connector makes possible the combination of many sizes of cable.

Material

Aluminum Alloy

Hardware

Yellow anodized aluminum nuts, U-bolts and lockwashers.

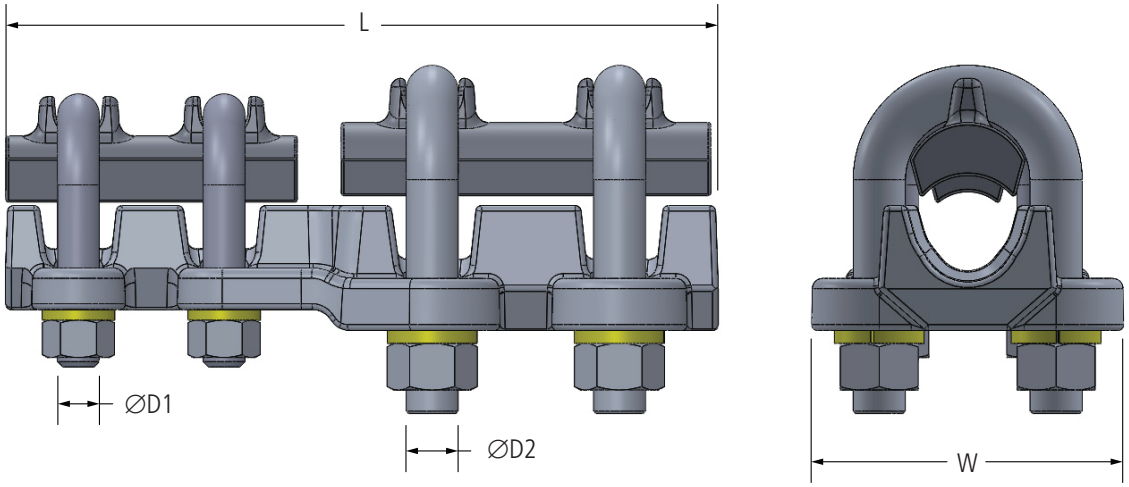

Ordering Information

CATALOG NUMBER	CABLE RANGE				DIMENSIONS IN INCHES		U-BOLT SIZE	
	MAIN		TAP					
	MIN	MAX	MIN	MAX	L	W	D1	D2
UKR21-13-AA	1	4/0	6	2/0	6 1/4	2 7/32	1/2	1/2
UKR30-13-AA	1/0	300	6	2/0	6 1/2	2 5/16	1/2	1/2
UKR30-21-AA	1/0	300	1	4/0	6 1/2	2 5/16	1/2	1/2
UKR50-13-AA	300	500	6	2/0	6 1/2	2 1/2	1/2	1/2
UKR50-21-AA	300	500	1	4/0	6 1/2	2 1/2	1/2	1/2
UKR50-30-AA	300	500	1/0	300	6 3/4	2 1/2	1/2	1/2
UKR90-13-AA	500	900	6	2/0	6 3/4	2 5/32	1/2	1/2
UKR90-21-AA	500	900	1	4/0	6 3/4	2 5/32	1/2	1/2
UKR90-30-AA	500	900	1/0	300	7	2 5/32	1/2	1/2
UKR90-50-AA	500	900	300	500	7	2 5/32	1/2	1/2
UKR100-21-AA	500	900	1	4/0	6 3/4	2 7/32	1/2	1/2
UKR100-30-AA	750	1000	1/0	300	7	2 7/32	1/2	1/2
UKR100-50-AA	750	1000	300	500	7	2 7/32	1/2	1/2
UKR100-90-AA	750	1000	500	900	7 1/4	2 7/32	1/2	1/2
UKR150-30-AA	1000	1500	1/0	300	7 1/2	3 11/32	1/2	1/2
UKR150-50-AA	1000	1500	300	500	7 1/2	3 11/32	1/2	1/2
UKR150-90-AA	1000	1500	500	900	8 3/8	3 3/4	1/2	5/8
UKR150-100-AA	1000	1500	750	1000	7 3/4	3 11/32	1/2	1/2
UKR200-50-AA	1500	2000	300	500	7 1/2	3 9/16	1/2	1/2
UKR200-90-AA	1500	2000	500	900	7 3/4	3 9/16	1/2	1/2
UKR200-100-AA	1500	2000	750	1000	7 3/4	3 9/16	1/2	1/2
UKR200-150-AA	1500	2000	1000	1500	9 3/4	3 9/16	5/8	5/8

© 2011, AFL, all rights reserved. PP-3-00496, Revision 1, 8.24.2020
Specifications are subject to change without notice.

230 kV Aluminum Bolted Couplers

DOSSERT®

TYPE UPK-AA

Reducing U-Bolt Pipe to Cable Coupler

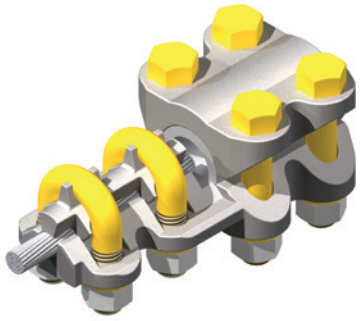

A U-bolt cable to pipe coupler. The variable U-bolt feature makes it possible for the connector for a given pipe size to accommodate several different cable sizes.

Material

Aluminum Alloy

Hardware

Yellow anodized aluminum nuts, bolts, U-bolts and lockwashers.

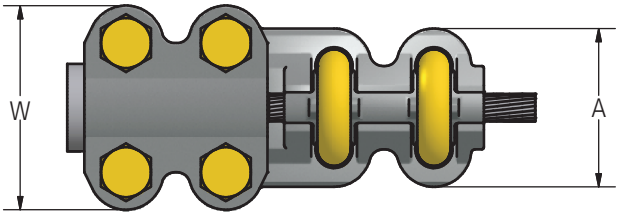

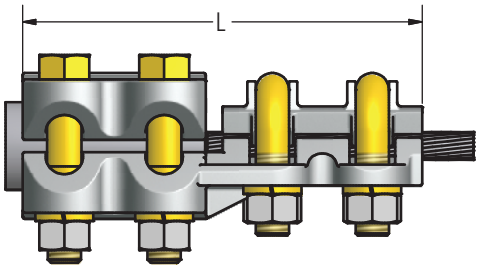

Ordering Information

CATALOG NUMBER	SPS	CABLE RANGE		DIMENSIONS IN INCHES			BOLT SIZE	U-BOLT SIZE
		MIN	MAX	A	L	W		
UPK50-13-AA	1/2	6STR	2/0STR	2 1/8	6	2 19/32	1/2	1/2
UPK50-21-AA	1/2	1STR	4/0STR	2 7/32	6	2 19/32	1/2	1/2
UPK50-30-AA	1/2	1/0STR	300MCM	2 5/16	6 1/4	2 19/32	1/2	1/2
UPK75-13-AA	3/4	6STR	2/0STR	2 1/8	6 1/4	2 19/32	1/2	1/2
UPK75-21-AA	3/4	1STR	4/0STR	2 732	6 1/4	2 13/16	1/2	1/2
UPK75-30-AA	3/4	1/0STR	300MCM	2 5/16	6 1/2	2 13/16	1/2	1/2
UPK75-50-AA	3/4	300MCM	500MCM	2 1/2	6 1/2	2 13/16	1/2	1/2
UPK100-13-AA	1	6STR	2/0STR	2 1/8	6 1/4	2 13/16	1/2	1/2
UPK100-21-AA	1	1STR	4/0STR	2 7/32	6 1/4	3 1/16	1/2	1/2
UPK100-30-AA	1	1/0STR	300MCM	2 5/16	6 1/2	3 1/16	1/2	1/2
UPK100-50-AA	1	300MCM	500MCM	2 1/2	6 1/2	3 1/16	1/2	1/2
UPK100-90-AA	1	500MCM	900MCM	2 25/32	6 1/2	3 1/16	1/2	1/2
UPK125-13-AA	1 1/4	6STR	2/0STR	2 1/8	6 5/8	3 1/16	1/2	1/2
UPK125-21-AA	1 1/4	1STR	4/0STR	2 7/32	6 5/8	3 13/32	1/2	1/2
UPK125-30-AA	1 1/4	1/0STR	300MCM	2 5/16	6 7/8	3 13/32	1/2	1/2
UPK125-50-AA	1 1/4	300MCM	500MCM	2 1/2	6 7/8	3 13/32	1/2	1/2
UPK125-90-AA	1 1/4	500MCM	900MCM	2 25/32	6 7/8	3 13/32	1/2	1/2
UPK125-100-AA	1 1/4	750MCM	1000MCM	2 27/32	7 1/8	3 13/32	1/2	1/2
UPK150-13-AA	1 1/2	6STR	2/0STR	2 1/8	6 3/8	3 21/32	1/2	1/2
UPK150-21-AA	1 1/2	1STR	4/0STR	2 7/32	6 5/8	3 21/32	1/2	1/2
UPK150-30-AA	1 1/2	1/0STR	300MCM	2 5/16	6 7/8	3 21/32	1/2	1/2
UPK150-50-AA	1 1/2	300MCM	500MCM	2 1/2	6 7/8	3 21/32	1/2	1/2
UPK150-90-AA	1 1/2	500MCM	900MCM	2 13/16	7	3 21/32	1/2	1/2
UPK150-100-AA	1 1/2	750MCM	1000MCM	2 27/32	7 1/8	3 21/32	1/2	1/2
UPK150-150-AA	1 1/2	1000MCM	1500MCM	3 1/2	7 5/8	3 21/32	1/2	5/8
UPK150-200-AA	1 1/2	1500MCM	2000MCM	3 11/16	7 7/8	3 21/32	1/2	5/8
UPK200-21-AA	2	1STR	4/0STR	2 7/32	6 7/8	4 1/8	1/2	1/2
UPK200-30-AA	2	1/0STR	300MCM	2 5/16	7 1/8	4 1/8	1/2	1/2
UPK200-50-AA	2	300MCM	500MCM	2 1/2	7 1/8	4 1/8	1/2	1/2
UPK200-90-AA	2	500MCM	900MCM	2 25/32	7 1/8	4 1/8	1/2	1/2
UPK200-100-AA	2	750MCM	1000MCM	2 27/32	7 3/8	4 1/8	1/2	1/2
UPK200-150-AA	2	1000MCM	1500MCM	3 1/2	7 5/8	4 1/8	1/2	5/8
UPK200-200-AA	2	1500MCM	2000MCM	3 11/16	7 7/8	4 1/8	1/2	5/8
UPK300-90-AA	3	500MCM	900MCM	2 35/32	7 1/4	5 1/4	1/2	1/2
UPK300-150-AA	3	1000MCM	1500MCM	3 1/2	9 1/4	5 5/8	5/8	5/8
UPK300-200-AA	3	1500MCM	2000MCM	3 1/2	8 7/8	5 1/2	5/8	5/8

© 2011, AFL, all rights reserved. PP-3-00510, 1.16.11
Specifications are subject to change without notice.

DOSSERT®

TYPE XCW-AA

Expansion Coupler Connector

Expansion couplers are designed to compensate for expansion and contraction in long bus runs.

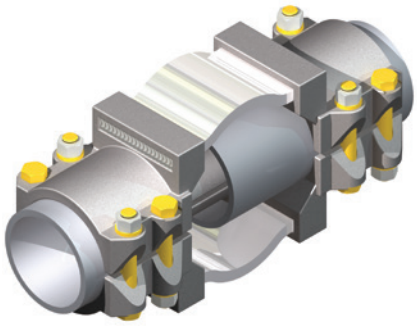

Material

Aluminum Alloy

Hardware

Yellow anodized aluminum bolts, nuts, and lockwashers.

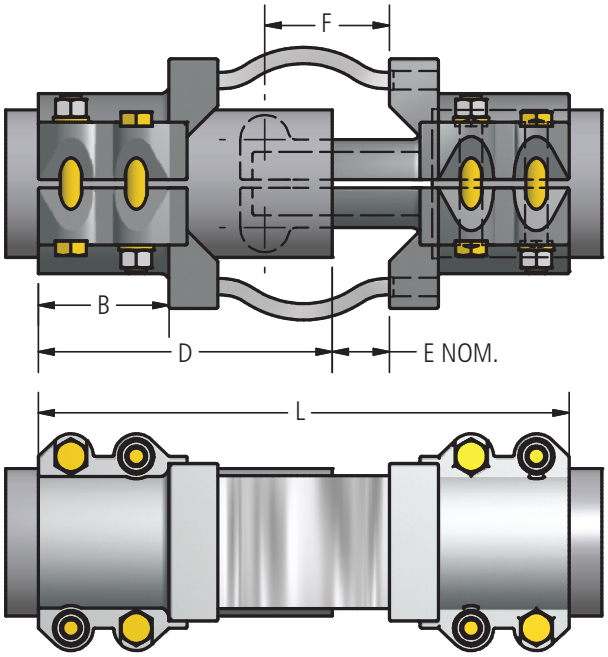

Ordering Information

CATALOG NUMBER		SPS	DIMENSIONS IN INCHES					
SCH40	SCH80		B	D	E	F	L	BOLT SIZE
XCW100-AA	XCW100E-AA	1	2-3/4	7-5/16	1-1/2	3-1/4	12-5/16	1/2
XCW125-AA	XCW125E-AA	1-1/4	3	8-1/2	1-1/2	3-1/4	14-3/4	1/2
XCW150-AA	XCW150E-AA	1-1/2	3	8-11/16	1-1/2	3-1/2	15-3/16	1/2
XCW200-AA	XCW200E-AA	2	3-1/4	8-1/2	2-1/8	4-3/4	16-1/2	1/2
XCW250-AA	XCW250E-AA	2-1/2	3-1/4	9-7/16	2-1/8	4-3/4	17-7/16	1/2
XCW300-AA	XCW300E-AA	3	3-1/2	10-1/2	2-1/8	4-3/4	18-3/4	5/8
XCW350-AA	XCW350E-AA	3-1/2	3-1/2	11	2-1/8	4-3/4	19-3/4	5/8
XCW400-AA	XCW400E-AA	4	3-3/4	11-13/16	2-1/8	4-3/4	20-11/16	5/8
XCW500-AA	XCW500E-AA	5	4	12	2-7/8	6-5/8	21-7/8	5/8
XCW600-AA	XCW600E-AA	6	4	14-1/4	2-7/8	6-5/8	24-1/8	5/8

© 2011, AFL, all rights reserved. PP-3-00592, 1.16.11
Specifications are subject to change without notice.

DOSSERT®

TYPE CI-AA SERIES

'Drive Fit' End Plug

'Drive fit' end plugs are designed to be forced into end of bus tube. End plug reduces electrostatic losses, seals out moisture and prevents birds from nesting in tube ends.



Material

Aluminum Alloy

Ordering Instructions

Step 1: Determine Catalog Number based on the bus conductor being used.
Example: End Plug for 4" schedule 40 bus pipe, the complete catalog number is: CI400-AA.



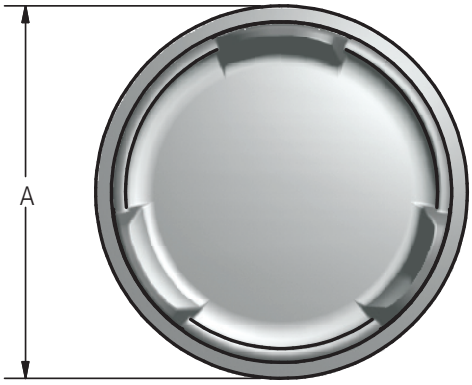

Ordering Information

CATALOG NUMBER		CONDUCTOR SIZE	DIMENSIONS IN INCHES		
SCH40	SCH80	SPS/EHPS	A	B	C
CI75-AA	CI75E-AA	3/4	1.1	.9	0.50
CI100-AA	CI100E-AA	1	1.3	1.0	0.56
CI125-AA	CI125E-AA	1 1/4	1.7	1.0	0.63
CI150-AA	CI150E-AA	1 1/2	1.9	1.0	0.60
CI200-AA	CI200E-AA	2	2.4	1.3	0.90
CI250-AA	CI250E-AA	2 1/2	2.9	1.6	1.10
CI300-AA	CI300E-AA	3	3.5	1.8	1.10
CI350-AA	CI350E-AA	3 1/2	4.0	2.4	1.60
CI400-AA	CI400E-AA	4	4.5	2.9	2.00
CI500-AA	CI500E-AA	5	5.6	3.4	2.40
CI600-AA	CI600E-AA	6	6.6	3.9	2.80
CI600R-AA 3/8 in wall		6 OD	6.0	3.5	2.50
CI800-AA	CI800E-AA	8	8.6	4.0	3.00
CI800R-AA 1/2 in wall		8 OD	8.0	4.0	3.00

© 2011, AFL, all rights reserved. PP-3-00286, Revision 1, 3.18.19
Specifications are subject to change without notice.

DOSSERT®

TYPE 16200

Internal Bolted End Plug

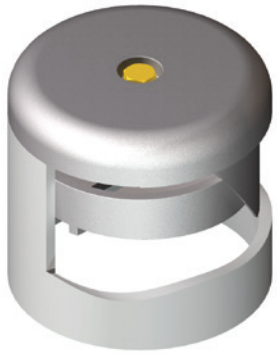

Bolted end plug is designed to wedge on inside of bus tube. End plugs reduce electrostatic losses, seal out moisture and prevent birds from nesting in tube ends. Bolted end plugs can be easily removed for modifications or future expansions.

Material

Aluminum Alloy

Hardware

Yellow anodized aluminum bolts, nuts, and lockwashers.

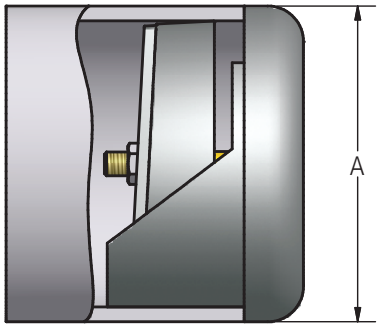

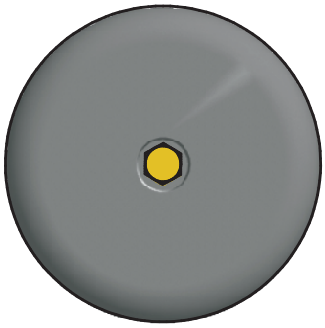

Ordering Information

CATALOG NUMBER		CONDUCTOR SIZE	DIMENSIONS IN INCHES	BOLT SIZE	NOMINAL WEIGHT LBS
SCH40	SCH80	SPS & EHPS	A		
16204	16224	1-1/4	1.66	1/4	0.25
16205	16225	1-1/2	1.90	1/4	0.37
16206	16226	2	2.38	1/4	0.45
16207	16227	2-1/2	2.88	3/8	0.64
16208	16228	3	3.50	3/8	0.86
16209	16229	3-1/2	4.00	3/8	0.98
16210	16230	4	4.50	3/8	1.90
16212	16232	5	5.56	3/8	2.30
16213	16233	6	6.62	1/2	4.50

© 2011, AFL, all rights reserved. PP-3-00158, 1.16.11
Specifications are subject to change without notice.

DOSSERT®

TYPE CX-AA

Aluminum Corona Bell For Tubular Bus



Corona Bell for sealing the exposed ends of standard pipe size tubular buses. Prevents rain and undue condensation from accumulating inside the bus. The smooth rounded surfaces reduce electrostatic discharge thereby aiding in the reduction of power transmission losses.

Material

Aluminum Alloy

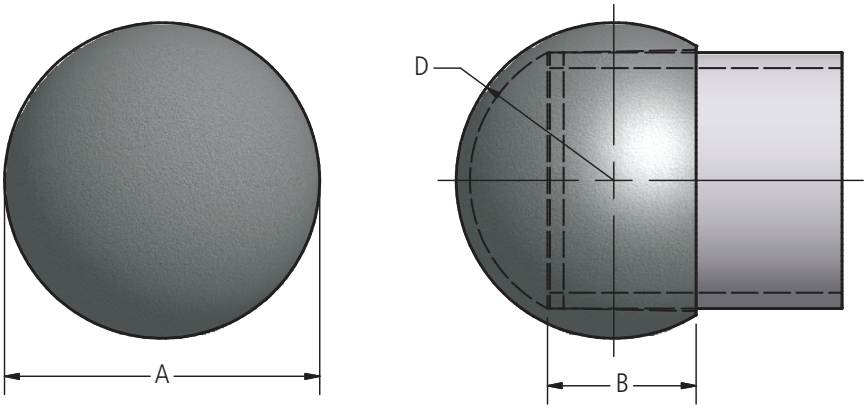

Ordering Information

CATALOG NUMBER	SPS	DIMENSIONS IN INCHES		
		A	B	D
CX50-AA	1/2	1 1/8	3/4	9/16
CX75-AA	3/4	1 3/8	7/8	11/16
CX100-AA	1	1 3/4	1 1/8	7/8
CX125-AA	1 1/4	2 1/8	1 1/8	1 1/16
CX150-AA	1 1/2	2 9/16	1 3/8	1 9/32
CX200-AA	2	3 1/8	1 1/2	1 9/16
CX250-AA	2 1/2	3 5/8	1 5/8	1 13/16
CX300-AA	3	4 5/16	1 7/8	2 5/32
CX350-AA	3 1/2	5	2 1/4	2 1/2
CX400-AA	4	5 1/2	2 1/2	2 3/4
CX450-AA	4 1/2	5 5/8	2 3/4	2 13/16
CX500-AA	5	6 3/4	3	3 3/8
CX600-AA	6	6 7/8	3 1/4	3 15/16

© 2011, AFL, all rights reserved. PP-3-00300, Rev 1, 10.24.18
Specifications are subject to change without notice.

DOSSERT®

TYPE DEC-AA, DEC-G-AA

Dead End Clamp

Dead ending strain clamp for stranded cable.



DEC-AA

Material

Aluminum Alloy

Hardware

Galvanized steel U-bolts, nuts, clevis pin, stainless steel cotter pin and lockwashers.



DEC-G-AA

Notes

For a socket eye add suffix "-SO" to end of catalog number.
EX: DEC159A-AA-SO

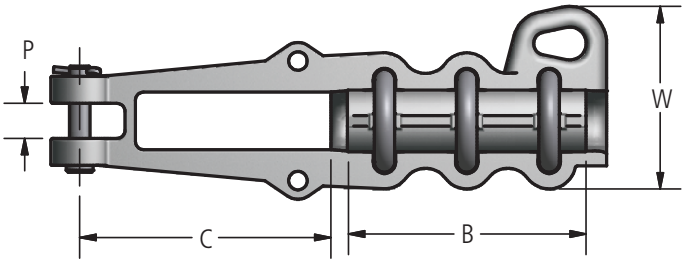

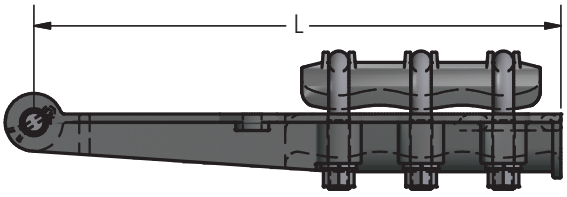

Ordering Information

CATALOG NUMBER		CABLE SIZE		NUMBER OF U-BOLTS	DIMENSIONS IN INCHES				
DEC-AA	DEC-G-AA	MIN	MAX		B	C	L	P	W
DEC26A-AA	DEC26A-G-AA	#4STR ACSR	266.5 MCM ACSR	2	3 3/4	3 9/16	9 5/8	11/16	3 1/2
DEC50-AA	DEC50-G-AA	4/0 AAC	500 MCM AAC	2	3 1/4	4 13/16	9 5/8	11/16	2 3/4
DEC103A-AA	DEC103A-G-AA	477 MCM ACSR	1033.5 MCM ACSR	3	6 1/4	5 3/8	13 5/8	15/16	5
DEC159A-AA	DEC159A-G-AA	715.5 MCM ACSR	1800 MCM AAC	2	6 1/4	7 1/4	14 7/8	1 1/16	5 3/16
DEC200-AA	DEC200-G-AA	1500 MCM AAC	2000 MCM AAC	3	7 1/4	7 5/8	16	1 1/16	5 1/2

© 2010, AFL, all rights reserved. PP-3-00306, Revision 2, 3.28.14
Specifications are subject to change without notice.

DOSSERT®
TYPE SEC-A-2U-AA

Straight Dead End Clamp with Pulling Eye



Material
Aluminum Alloy

Hardware
Galvanized steel bolts, nuts, and lockwashers.

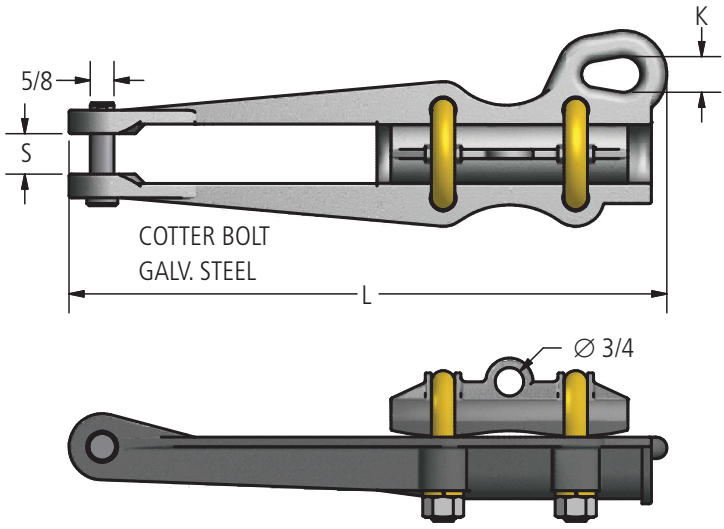

Ordering Information

CATALOG NUMBER	CABLE RANGE AAC		CABLE RANGE ACSR		DIAMETER		DIMENSIONS IN INCHES			BOLT SIZE
	MIN	MAX	MIN	MAX	MIN	MAX	K	L	S	
SEC13A-2U	6 STR	2/0 STR	6	2/0	.184	.460	7/8	8 5/16	11/16	3/8
SEC26A-2U	2 STR	266.8 MCM	4	266.8 MCM	.247	.642	7/8	9 5/8	11/16	1/2
SEC34A-2U	3/0	350 MCM	3/0	336.4 MCM	.464	.741	7/8	9 3/4	13/16	1/2
SEC48A-2U	4/0	556.5 MCM	3/0	477 MCM	.522	.858	7/8	9 3/4	13/16	1/2
SEC64A-2U	300 MCM	795 MCM	266.8 MCM	666 MCM	.626	1.026	15/16	11	1 1/16	1/2
SEC111A-2U	600 MCM	1272 MCM	556.5 MCM	1113 MCM	.879	1.300	15/16	12 5/8	1 1/16	1/2
SEC159A-2U	750 MCM	1800 MCM	715.5 MCM	1590 MCM	.987	1.548	15/16	14 7/8	1 1/16	5/8

© 2011, AFL, all rights reserved. PP-3-00455, Revision 3, 3.28.14
Specifications are subject to change without notice.

DOSSERT®

TYPE SEC-AA, SEC-P-AA

Dead End Clamp

The SEC-AA is a straight dead end clamp with no pulling eye. The SEC-P-AA is a dead end clamp with a pulling eye.



SEC-AA



SEC-P-AA

Material

Aluminum Alloy

Hardware

Yellow anodized aluminum U-bolts, nuts and lockwashers.
Galvanized steel clevis pin, stainless steel cotter pin.

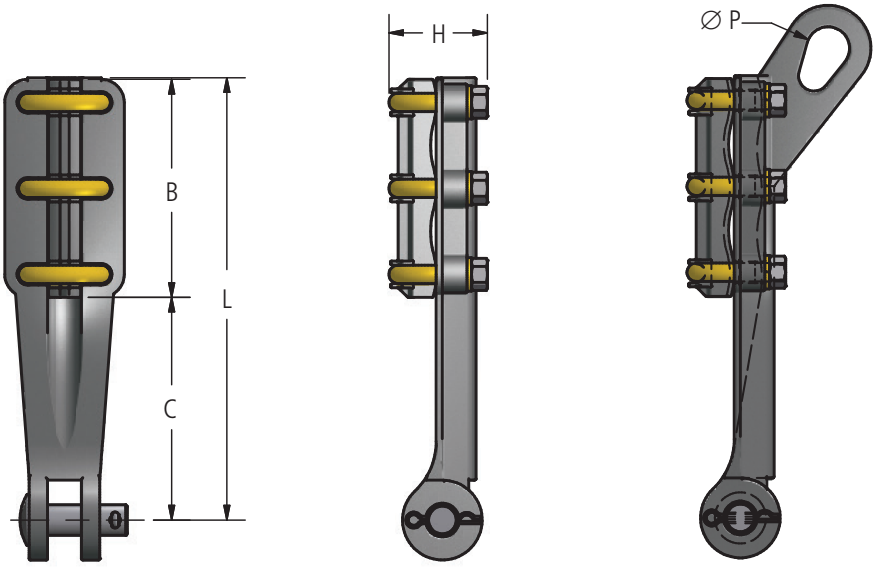

Ordering Information

CATALOG NUMBER		CONDUCTOR RANGE AAC		DIMENSIONS IN INCHES					U-BOLT SIZE
SEC-AA	SEC-P-AA	MIN	MAX	B	C	H	L	P	
SEC21-AA	SEC21-P-AA	1 STR	4/0 STR	5 1/4	4 3/8	2 1/8	9 5/8	7/8	3/8
SEC35-AA	SEC35-P-AA	4/0 STR	350 MCM	5 3/8	4 3/8	2 5/8	9 3/4	1	3/8
SEC50-AA	SEC50-P-AA	350 MCM	500 MCM	5 3/4	4 5/8	2 3/4	10 3/8	1 1/8	1/2
SEC100-AA	SEC100-P-AA	500 MCM	1000 MCM	6 1/4	5	3 1/2	11 1/4	1 1/4	1/2
SEC103-AA	SEC103-P-AA	500 MCM	1033.5 ACSR	6 1/4	7 1/2	3 1/2	13 3/4	1 1/4	1/2
—	SEC200-P-AA	1500 MCM	2000 MCM	6 1/4	8	4 1/4	14 1/4	1 1/4	5/8
SEC216-AA	—	1590 MCM	2156 MCM	6 1/8	3 1/2	4 1/16	10 9/16	-	1/2

© 2011, AFL, all rights reserved. PP-3-00456, Revision 2, 4.11.2022
Specifications are subject to change without notice.

DOSSERT®

TYPE EP-AA, EP-30-AA, EP-45-AA, EP-60-AA

Clamp Type Elbow For Tubular Bus

A clamp type elbow for connecting standard pipe size tubular buses at 30, 45, 60, and 90 degree angles to each other. Conductor bearing areas are accurately machine finished with a special surface to provide good electrical contact and high pull-out strength.

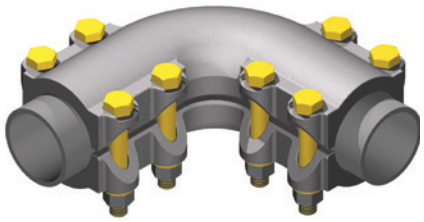

EP-AA

Material

Aluminum Alloy

Hardware

Yellow anodized aluminum bolts, nuts, and lockwashers.

Example

Example: For a 2" SPS Pipe, 30 degree angle, order EP200-30-AA.

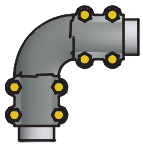

EP-90-AA
90 DEGREES

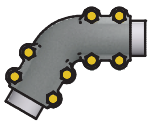

EP-60-AA
60 DEGREES

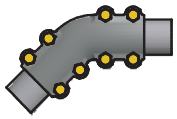

EP-45-AA
45 DEGREES

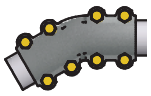

EP-30-AA
30 DEGREES

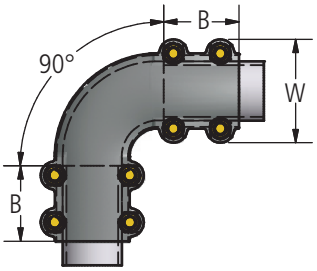

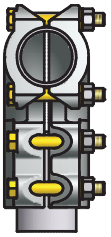

Ordering Information

CATALOG NUMBER				SPS	DIMENSIONS IN INCHES		BOLT SIZE	NUMBER OF BOLTS
EP-AA	EP-60-AA	EP-45-AA	EP-30-AA		B	W		
EP50-AA	EP50-60-AA	EP50-45-AA	EP50-30-AA	1/2	3	2 5/8	1/2	8
EP75-AA	EP75-60-AA	EP75-45-AA	EP75-30-AA	3/4	2 3/4	2 3/4	1/2	8
EP100-AA	EP100-60-AA	EP100-45-AA	EP100-30-AA	1	2 3/4	3 1/16	1/2	8
EP125-AA	EP125-60-AA	EP125-45-AA	EP125-30-AA	1 1/4	3	3 7/16	1/2	8
EP150-AA	EP150-60-AA	EP150-45-AA	EP150-30-AA	1 1/2	3	3 11/16	1/2	8
EP200-AA	EP200-60-AA	EP200-45-AA	EP200-30-AA	2	3 1/4	4 1/4	1/2	8
EP250-AA	EP250-60-AA	EP250-45-AA	EP250-30-AA	2 1/2	3 1/4	4 5/8	1/2	8
EP300-AA	EP300-60-AA	EP300-45-AA	EP300-30-AA	3	3 3/4	5 5/8	5/8	8
EP350-AA	EP350-60-AA	EP350-45-AA	EP350-30-AA	3 1/2	3 3/4	6 1/8	5/8	8
EP400-AA	EP400-60-AA	EP400-45-AA	EP400-30-AA	4	3 3/4	6 5/8	5/8	8
EP500-AA	EP500-60-AA	EP500-45-AA	EP500-30-AA	5	6	7 11/16	5/8	12
EP600-AA	EP600-60-AA	EP600-45-AA	EP600-30-AA	6	6	8 3/4	5/8	12

© 2010, AFL, all rights reserved. PP-3-00328, Revision 1, 2.11.16
Specifications are subject to change without notice.

DOSSERT®

TYPE BS-AA

Alumnium Bar Spacer

An aluminum spacer for a standard bus bar spacing of 1/4 inch. Designed for use with both A and H clamps.



Material

Aluminum Alloy

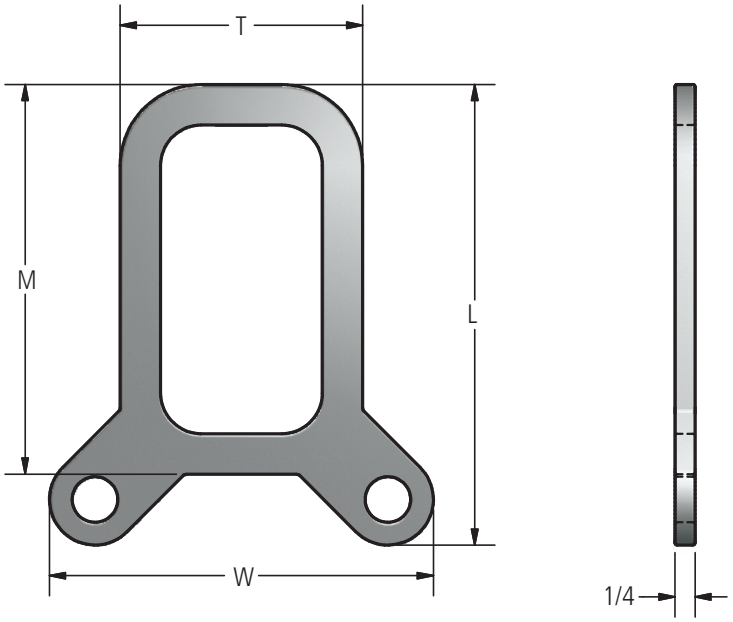

Ordering Information

CATALOG NUMBER	WIDTH OF BUSES		DIMENSIONS IN INCHES		
	M	T	L	W	BOLT SIZE
BS11-AA	1	1	1 5/8	2 5/16	3/8
BS21-AA	2	1	2 5/8	2 5/16	3/8
BS22-AA	2	2	2 5/8	3 5/16	3/8
BS31-AA	3	1	3 5/8	2 5/16	3/8
BS32-AA	3	2	3 5/8	3 5/16	3/8
BS33-AA	3	3	3 5/8	4 5/16	3/8
BS42-AA	4	2	4 5/8	3 5/16	3/8
BS43-AA	4	3	4 3/4	4 3/4	1/2
BS44-AA	4	4	4 3/4	5 3/4	1/2
BS52-AA	5	2	5 3/4	3 5/8	1/2
BS53-AA	5	3	5 3/4	4 3/4	1/2
BS54-AA	5	4	5 3/4	5 3/4	1/2
BS55-AA	5	5	5 7/8	7 1/8	5/8
BS62-AA	6	2	6 3/4	3 5/8	1/2
BS63-AA	6	3	6 3/4	4 3/4	1/2
BS64-AA	6	4	6 3/4	5 3/4	1/2
BS65-AA	6	5	6 7/8	7 1/8	5/8
BS66-AA	6	6	6 7/8	8 1/8	5/8

© 2010, AFL, all rights reserved. PP-3-00258, Revision 0, 11.09.10
Specifications are subject to change without notice.

DOSSERT®
TYPE DA-AA

Connectors For Bus Bar Alignment And Coupling

Ruggedly constructed, this connector permits the coupling or aligning of bus while securing high uniform contact pressure between surfaces.

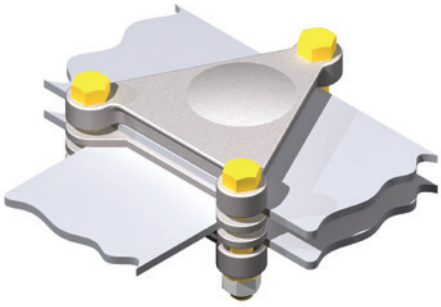

Material

Aluminum Alloy

Hareware

Yellow anodized aluminum bolts, nuts and lockwashers.

Notes

Unless otherwise specified clamps are provided with bolts of sufficient length to clamp three 1/4" bars (3/4" total thickness). For proper length of bolts specify total number of 1/4" bars and spacers to be clamped or combined thickness or bar and spacer lay up to be clamped. For spacers see BS-AA page 277.

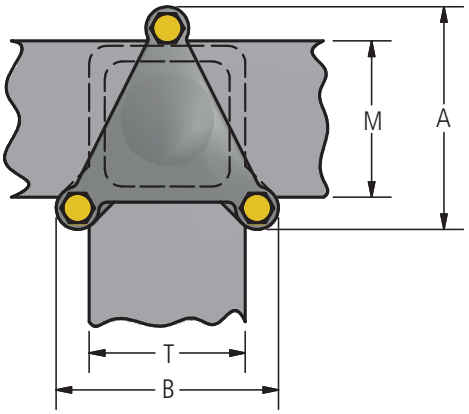

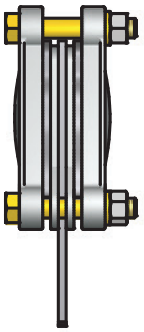

Ordering Information

CATALOG NUMBER	DIMENSIONS IN INCHES		FLAT BUS SIZE		BOLT SIZE
	A	B	M	T	
DA11-AA	2 5/16	2 5/16	1	1	3/8
DA21-AA	3 5/16	2 5/16	2	1	3/8
DA22-AA	3 5/16	3 5/16	2	2	3/8
DA31-AA	4 5/16	2 5/16	3	1	3/8
DA32-AA	4 5/16	3 5/16	3	2	3/8
DA33-AA	4 5/16	4 5/16	3	3	3/8
DA42-AA	5 5/16	3 5/16	4	2	3/8
DA43-AA	5 3/4	4 3/4	4	3	1/2
DA44-AA	5 3/4	5 3/4	4	4	1/2
DA52-AA	6 3/4	3 3/4	5	2	1/2
DA53-AA	6 3/4	4 3/4	5	3	1/2
DA54-AA	6 3/4	5 3/4	5	4	1/2
DA55-AA	7 1/8	7 1/8	5	5	5/8
DA62-AA	7 3/4	3 3/4	6	2	1/2
DA63-AA	7 3/4	4 3/4	6	3	1/2
DA64-AA	7 3/4	5 3/4	6	4	1/2
DA65-AA	8 1/8	7 1/8	6	5	5/8
DA66-AA	8 1/8	8 1/8	6	6	5/8

© 2010, AFL, all rights reserved. PP-3-00304, Revision 0, 11.09.10
Specifications are subject to change without notice.

DOSSERT®

TYPE DH-AA

Flat Bar H Clamp

A clamp for developing high contact pressures between flat aluminum bus bars. For aligning, coupling, crossing and tapping conductors.

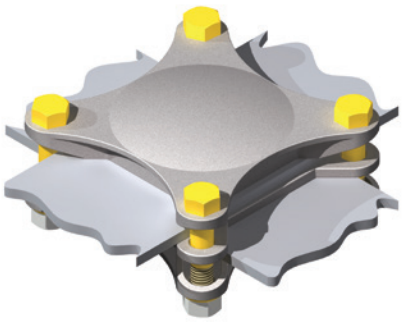

Material

Aluminum Alloy

Hardware

Yellow anodized aluminum bolts, nuts and lockwashers.

Notes

Unless otherwise specified clamps are provided with bolts of sufficient length to clamp three 1/4" bars (3/4" total thickness). For proper length of bolts specify total number of 1/4" bars and spacers to be clamped or combined thickness or bar and spacer lay up to be clamped. For spacers see BS-AA page 277.

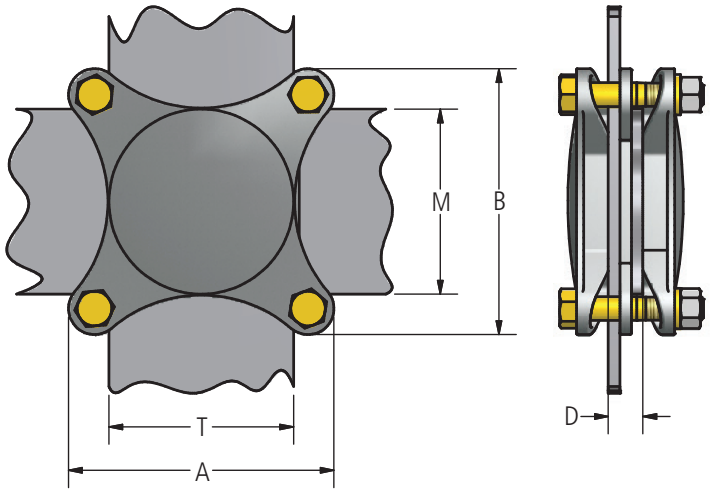

Ordering Information

CATALOG NUMBER	DIMENSIONS IN INCHES			WIDTH OF BARS		BOLT SIZE
	A	B	D	M	T	
DH11-AA	2 3/4	2 3/4	3/4	1	1	1/2
DH21-AA	3 3/4	2 3/4	3/4	2	1	1/2
DH22-AA	3 5/16	3 5/16	3/4	2	2	3/8
DH31-AA	4 3/4	2 3/4	3/4	3	1	1/2
DH32-AA	3 5/16	4 5/16	3/4	3	2	3/8
DH33-AA	4 5/16	4 5/16	1 1/4	3	3	3/8
DH42-AA	3 5/16	5 5/16	1 1/4	4	2	3/8
DH43-AA	4 3/4	5 3/4	1 1/4	4	3	1/2
DH44-AA	5 3/4	5 3/4	1 1/4	4	4	1/2
DH52-AA	3 3/4	6 3/4	1 1/4	5	2	1/2
DH53-AA	4 3/4	6 3/4	1 1/4	5	3	1/2
DH54-AA	5 3/4	6 3/4	1 1/4	5	4	1/2
DH55-AA	7 1/8	7 1/8	1 1/4	5	5	5/8
DH62-AA	3 3/4	7 3/4	1 1/4	6	2	1/2
DH63-AA	4 3/4	7 3/4	1 1/4	6	3	1/2
DH64-AA	5 3/4	7 3/4	1 1/4	6	4	1/2
DH65-AA	7 1/8	8 1/8	1 1/4	6	5	5/8
DH66-AA	8 1/8	8 1/8	1 1/4	6	6	5/8

© 2010, AFL, all rights reserved. PP-3-00311, Revision 0, 11.09.10
Specifications are subject to change without notice.

230 kV Aluminum Bolted Ground Clamps

DOSSERT®

TYPE GA-AA, GAA-AA

Two Conductor Flat Bar Ground Clamp

A two piece ground clamp for clamping two wires or cables to a flat bar, plate, or structural member. Permits a slight range of variability in accommodating different size conductors. Bolts are retained by body to enable assembling with only one wrench. Bolts are supplied to clamp a 1/4 Inch bar.

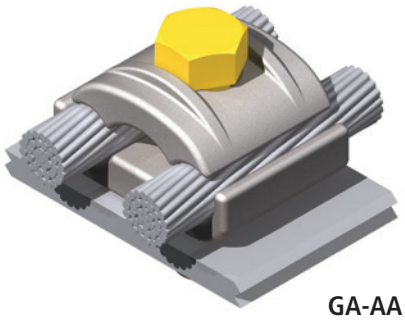

GA-AA

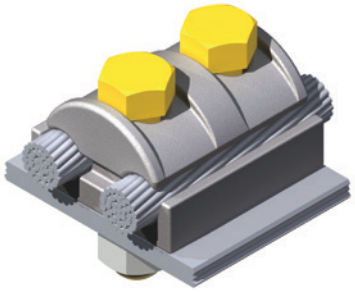

GAA-AA

Material

Aluminum Alloy

Hardware

Yellow anodized aluminum bolts, nuts, and lockwashers.

Note

Bolt length supplied to clamp a 1/4" bar with maximum conductor in place. To obtain longer bolt add thickness of bar to the CAT.#. EX: For 1/2" thick bar order: GA13-T1/2-AA

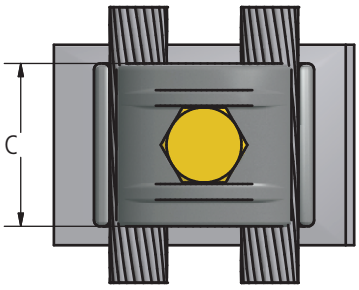

GA-AA

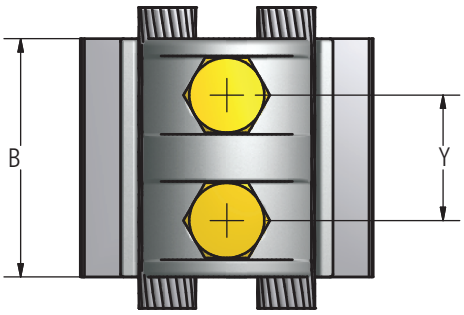

GAA-AA

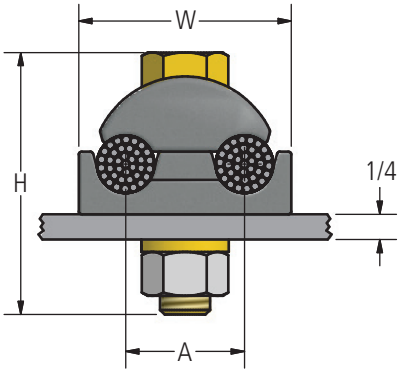

Ordering Information

CATALOG NUMBER		CABLE RANGE AAC		DIMENSIONS IN INCHES						BOLT SIZE
GA-AA	GAA-AA	MIN	MAX	A	B	C	H	W	Y	
GA4-AA	GAA4-AA	8 SOL	4 STR	3/4	2	1 3/8	1 3/8	1 1/4	15/16	3/8
GA13-AA	GAA13-AA	4 SOL	2/0 STR	1	2	1 1/2	1 1/2	1 11/16	1	3/8
GA25-AA	GAA25-AA	2/0 SOL	250 MCM	1 1/4	2 1/2	1 3/4	2 1/4	2 1/4	1 1/4	1/2
GA50-AA	GAA50-AA	300 MCM	500 MCM	1 1/2	2 1/2	2	2 3/4	2 1/2	1 3/8	1/2
GA75-AA	GAA75-AA	550 MCM	750 MCM	1 3/4	3	2 3/8	3	3 1/4	1 9/16	5/8
GA100-AA	GAA100-AA	800 MCM	1000 MCM	2	3	2 1/2	3 1/4	3 5/8	1 9/16	5/8

© 2010, AFL, all rights reserved. PP-3-00335, Revision 1, 3.29.2023
Specifications are subject to change without notice.

DOSSERT®

TYPE GD-AA

Pipe Ground Clamp

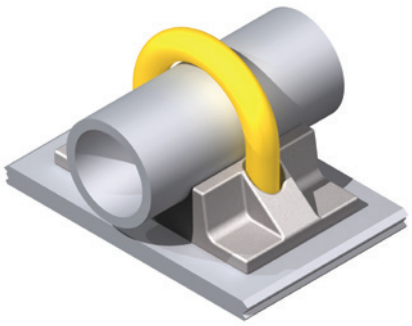

Material

Aluminum Alloy

Hardware

Yellow anodized aluminum U-bolts, nuts, and lockwashers.

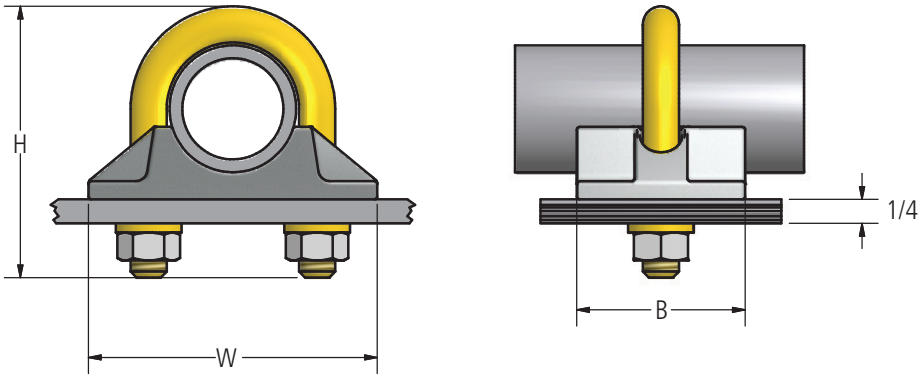

Ordering Information

CATALOG NUMBER	GROUND		DIMENSIONS IN INCHES			U-BOLT SIZE
	SPS	ROD	B	H	W	
GD25-AA	1/4	1/2	1-1/4	1-15/16	1-7/8	3/8
GD38-AA	3/8	5/8 - 3/4	1-1/4	2-1/16	2	3/8
GD75-AA	1/2 - 3/4	7/8 - 1	1-1/2	2-7/16	2-1/2	3/8
GD100-AA	1	1 - 1/4	1-3/4	2-9/16	2-5/8	3/8
GD125-AA	1-1/4	1-1/2 - 1-5/8	1-3/4	3-1/8	3	3/8
GD150-AA	1-1/2	1-3/4	2	3-3/8	3-3/16	3/8
GD200-AA	2	2-1/4 - 2-3/8	2	3-7/8	3-11/16	3/8
GD250-AA	2-1/2	2-3/4 - 2-7/8	2	4-1/4	4-3/16	3/8
GD300-AA	3	3-3/8 - 3-1/2	2-1/2	5-1/4	5-3/16	1/2
GD350-AA	3-1/2	3-7/8 - 4	2-1/2	5-3/4	5-11/16	1/2
GD400-AA	4	4-3/8 - 4-1/2	2-5/8	6-7/8	6-3/16	1/2

© 2010, AFL, all rights reserved. PP-3-00341, Revision 0, 11.09.10
Specifications are subject to change without notice.

DOSSERT®
TYPE GF-AA

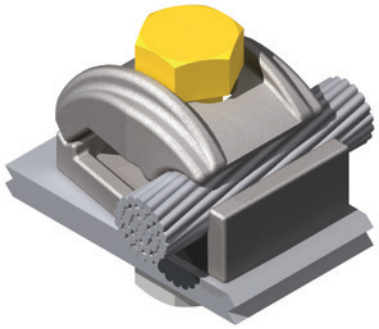

Pipe Ground Clamp

A ground clamp for grounding a cable or wire to a flat bar, plate or flat structural steel member. The bolt is retained by the cap to enable assembly with only one wrench.

Material

Aluminum Alloy

Hardware

Yellow anodized aluminum bolts, nuts, and lockwashers.

Note

Bolt length supplied to clamp a 1/4" bar with maximum conductor in place. To obtain longer bolt add thickness of bar to the CAT.#. EX: For 1/2" thick bar order: GF13-T1/2-AA

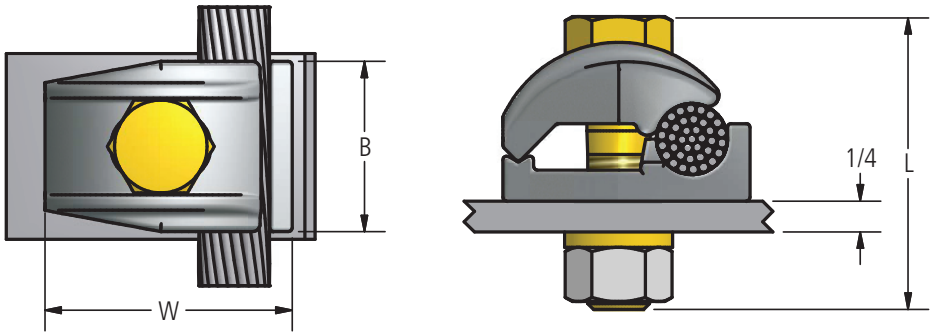

Ordering Information

CATALOG NUMBER	CONDUCTOR RANGE AAC		DIMENSIONS IN INCHES			BOLT SIZE
	MIN	MAX	B	L	W	
GF4-AA	8 Solid	4 Stranded	1	1 15/16	1 7/16	3/8
GF13-AA	4 Solid	2/0 Stranded	1 1/8	1 15/16	1 9/16	3/8
GF25-AA	2/0 Solid	250 MCM	1 3/8	2 1/4	2	1/2
GF30-AA	4 Solid	300 MCM	1 3/8	2 1/2	2 1/4	1/2
GF50-AA	300 MCM	500 MCM	1 1/2	2 3/4	2 7/16	1/2
GF75-AA	550 MCM	750 MCM	1 5/8	3 1/4	2 7/8	5/8
GF100-AA	800 MCM	1000 MCM	1 3/4	3 1/2	3 3/16	5/8

© 2010, AFL, all rights reserved. PP-3-00344, Revision 0, 11.09.10
Specifications are subject to change without notice.

DOSSERT®

TYPE GPC-AA

Pipe Ground Clamp

The ground clamp can be used to clamp cable parallel or perpendicular to the ground pipe.

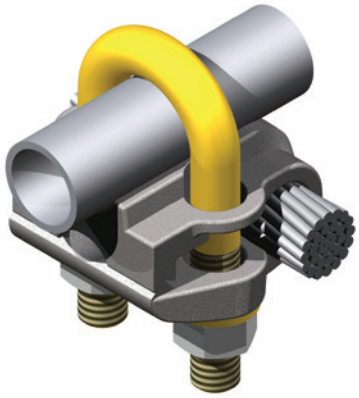

Material

Aluminum Alloy

Hardware

Yellow anodized aluminum nuts, U-bolts and lockwashers.

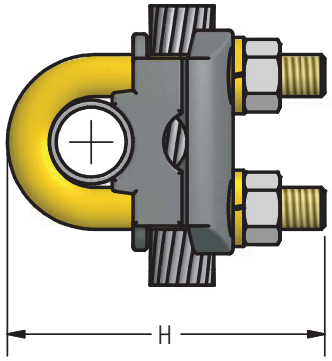

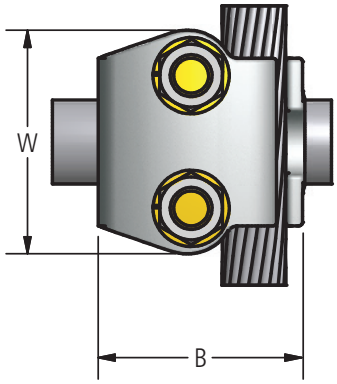

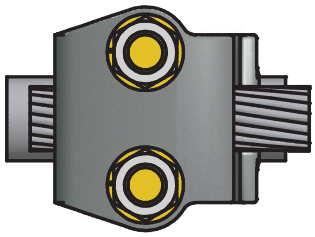

Ordering Information

CATALOG NUMBER	ROD	SPS	CABLE RANGE AAC		DIMENSIONS IN INCHES			U-BOLT SIZE
			MIN	MAX	B	H	W	
GPC25-4-AA	1/2	1/4	8 SOL	4 STR	1 7/16	2 7/16	1 7/8	3/8
GPC25-13-AA	1/2	1/4	4 SOL	2/0 STR	1 5/8	2 7/16	1 7/8	3/8
GPC25-25-AA	1/2	1/4	2/0 SOL	250 MCM	1 7/8	2 1/2	1 7/8	3/8
GPC38-4-AA	5/8 or 3/4	3/8	8 SOL	4 STR	1 7/16	2 1/2	2	3/8
GPC38-13-AA	5/8 or 3/4	3/8	4 SOL	2/0 STR	1 5/8	2 25/32	2 1/16	3/8
GPC38-25-AA	5/8 or 3/4	3/8	2/0 SOL	250 MCM	1 7/8	2 3/4	2	3/8
GPC38-50-AA	5/8 or 3/4	3/8	300 MCM	500MCM	2 3/8	3 1/4	2 3/8	1/2
GPC75-4-AA	1	1/2 or 3/4	8 SOL	4 STR	1 7/16	2 9/16	2 3/8	3/8
GPC75-13-AA	1	1/2 or 3/4	4 SOL	2/0 STR	1 5/8	2 3/4	2 3/8	3/8
GPC75-25-AA	1	1/2 or 3/4	2/0 SOL	250 MCM	1 7/8	2 7/8	2 3/8	3/8
GPC75-50-AA	1	1/2 or 3/4	300 MCM	500MCM	2 3/8	3 1/2	2 3/4	1/2
GPC75-75-AA	1	1/2 or 3/4	500 MCM	750 MCM	2 5/8	3 3/4	2 3/4	1/2
GPC100-4-AA	–	1	8 SOL	4 STR	1 7/16	2 3/4	2 5/8	3/8
GPC100-13-AA	–	1	4 SOL	2/0 STR	1 5/8	3 1/4	2 5/8	3/8
GPC100-25-AA	–	1	2/0 SOL	250 MCM	1 7/8	3 1/4	2 5/8	3/8
GPC100-50-AA	–	1	300 MCM	500 MCM	2 3/8	3 3/4	3	1/2
GPC100-75-AA	–	1	500 MCM	750 MCM	2 21/32	4 7/16	3 1/8	1/2
GPC100-100-AA	–	1	750 MCM	1000 MCM	2 7/8	4 1/4	3	1/2
GPC3875-AA	5/8 or 3/4	3/8	500 MCM	750 MCM	2 5/8	4	2 3/4	1/2
GPC125-4-AA	–	1 1/4	8 SOL	4 STR	1 7/16	3 1/4	3	3/8
GPC125-13-AA	–	1 1/4	4 SOL	2/0 MCM	1 5/8	3 9/16	3	3/8
GPC125-25-AA	–	1 1/4	2/0 SOL	250 MCM	1 7/8	3 5/8	3	3/8
GPC125-50-AA	–	1 1/4	300 MCM	500 MCM	2 3/8	4 1/16	3 3/8	1/2
GPC125-75-AA	–	1 1/4	500 MCM	750 MCM	2 3/4	4 11/16	3 3/8	1/2
GPC125-100-AA	–	1 1/4	750 MCM	1000 MCM	3 1/16	4 7/8	3 3/4	5/8

© 2010, AFL, all rights reserved. PP-3-00350, Revision 2, 9.30.2021
Specifications are subject to change without notice.

230 kV Aluminum Bolted Ground Clamps

DOSSERT®

TYPE GPC-AA

Pipe Ground Clamp

Ordering Information

CATALOG NUMBER	ROD	SPS	CABLE RANGE AAC		DIMENSIONS IN INCHES			U-BOLT SIZE
			MIN	MAX	B	H	W	
GPC150-4-AA	–	1 1/2	8 SOL	4 STR	1 7/8	3 7/16	3 1/4	3/8
GPC150-13-AA	–	1 1/2	4 SOL	2/0 STR	1 5/8	3 7/8	3 1/4	3/8
GPC150-25-AA	–	1 1/2	2/0 SOL	250 MCM	1 7/8	4	3 1/4	3/8
GPC150-50-AA	–	1 1/2	300 MCM	500 MCM	2 3/8	4 5/16	3 5/8	1/2
GPC150-75-AA	–	1 1/2	500 MCM	750 MCM	2 3/4	4 15/16	3 5/8	1/2
GPC150-100-AA	–	1 1/2	750 MCM	1000 MCM	3 1/16	5 1/16	4	5/8
GPC200-4-AA	–	2	8 SOL	4 STR	1 7/16	3 7/8	3 11/16	3/8
GPC200-13-AA	–	2	4 SOL	2/0 STR	1 5/8	4 1/4	3 11/16	3/8
GPC200-25-AA	–	2	2/0 SOL	250 MCM	1 7/8	4 7/16	3 11/16	3/8
GPC200-50-AA	–	2	300 MCM	500 MCM	2 3/8	4 3/4	4 1/16	1/2
GPC200-75-AA	–	2	500 MCM	750 MCM	2 3/4	5 5/8	4 1/16	1/2
GPC200-100-AA	–	2	750 MCM	1000 MCM	3 1/16	5 1/2	4 7/16	5/8
GPC250-4-AA	–	2 1/2	8 SOL	4 STR	1 7/16	4 3/8	4 3/16	3/8
GPC250-13-AA	–	2 1/2	4 SOL	2/0 STR	1 5/8	4 3/4	4 3/16	3/8
GPC250-25-AA	–	2 1/2	2/0 SOL	250 MCM	1 7/8	4 7/8	4 3/16	3/8
GPC250-50-AA	–	2 1/2	300 MCM	500 MCM	2 3/8	5 1/4	4 9/16	1/2
GPC250-75-AA	–	2 1/2	500 MCM	750 MCM	2 3/4	5 7/8	4 15/16	1/2
GPC250-100-AA	–	2 1/2	750 MCM	1000 MCM	3 1/16	6	4 13/16	5/8
GPC300-4-AA	–	3	8 SOL	4 STR	1 7/16	5	4 13/16	3/8
GPC300-13-AA	–	3	4 SOL	2/0 STR	1 5/8	5 3/8	4 13/16	3/8
GPC300-25-AA	–	3	2/0 SOL	250 MCM	1 7/8	5 1/2	5 3/16	3/8
GPC300-50-AA	–	3	300 MCM	500 MCM	2 3/8	5 3/4	5 3/16	1/2
GPC300-75-AA	–	3	500 MCM	750 MCM	2 3/4	6 1/2	5 9/16	1/2
GPC300-100-AA	–	3	750 MCM	1000 MCM	3 1/16	6 5/8	5 5/16	5/8
GPC350-4-AA	–	3 1/2	8 SOL	4 STR	1 7/16	5 1/2	5 5/16	3/8
GPC350-13-AA	–	3 1/2	4 SOL	2/0 STR	1 5/8	5 7/8	5 5/16	3/8
GPC350-25-AA	–	3 1/2	2/0 SOL	250 MCM	1 7/8	6	5 11/16	3/8
GPC350-50-AA	–	3 1/2	300 MCM	500 MCM	2 3/8	6 1/4	5 11/16	1/2
GPC350-75-AA	–	3 1/2	500 MCM	750 MCM	2 3/4	7	6 1/16	1/2
GPC350-100-AA	–	3 1/2	750 MCM	1000 MCM	3 1/16	7 1/8	5 13/16	5/8
GPC400-4-AA	–	4	8 SOL	4 STR	1 7/16	6	5 13/16	3/8
GPC400-13-AA	–	4	4 SOL	2/0 STR	1 5/8	6 3/8	5 13/16	3/8
GPC400-25-AA	–	4	2/0 SOL	250 MCM	1 7/8	6 1/2	6 3/16	3/8
GPC400-50-AA	–	4	300 MCM	500 MCM	2 3/8	6 3/4	6 3/16	1/2
GPC400-75-AA	–	4	500 MCM	750 MCM	2 3/4	7 1/2	6 3/16	1/2
GPC400-100-AA	–	4	750 MCM	1000 MCM	3 1/16	7 5/8	6 3/8	5/8
GPC450-4-AA	–	4 1/2	8 SOL	4 STR	1 7/16	6 1/2	6 3/8	3/8
GPC450-13-AA	–	4 1/2	4 SOL	2/0 STR	1 5/8	6 3/4	6 3/8	3/8
GPC450-25-AA	–	4 1/2	2/0 SOL	250 MCM	1 7/8	7	6 3/4	3/8
GPC450-50-AA	–	4 1/2	300 MCM	500 MCM	2 3/8	7 1/4	6 3/4	1/2
GPC450-75-AA	–	4 1/2	500 MCM	750 MCM	2 3/4	8	7 3/16	1/2
GPC450-100-AA	–	4 1/2	750 MCM	1000 MCM	3 1/16	8 1/8	6 7/8	5/8
GPC500-4-AA	–	5	8 SOL	4 STR	1 7/16	7 1/16	6 7/8	3/8
GPC500-13-AA	–	5	4 SOL	2/0 STR	1 5/8	7 5/16	6 7/8	3/8
GPC500-25-AA	–	5	2/0 SOL	250 MCM	1 7/8	7 9/16	7 1/4	3/8
GPC500-50-AA	–	5	300 MCM	500 MCM	2 3/8	7 13/16	7 1/4	1/2
GPC500-75-AA	–	5	500 MCM	750 MCM	2 3/4	5 9/16	7 1/4	1/2
GPC500-100-AA	–	5	750 MCM	1000 MCM	3 1/16	8 11/16	7 5/8	5/8

© 2010, AFL, all rights reserved. PP-3-00350, Revision 2, 9.30.2021
Specifications are subject to change without notice.

DOSSERT®

TYPE GS-AA

Ground Clamp for 2 Cables to Perpendicular Pipe

Ground clamp is designed to clamp two cables to pipe.

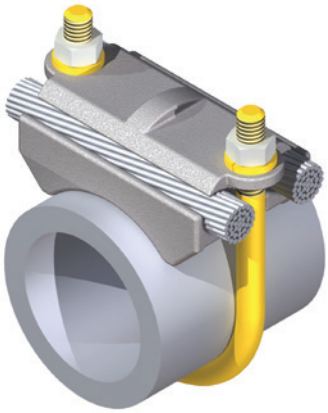

Material

Aluminum Alloy

Hardware

Yellow anodized aluminum nuts, U-bolt and lockwashers.

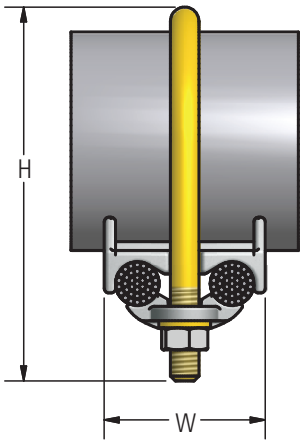

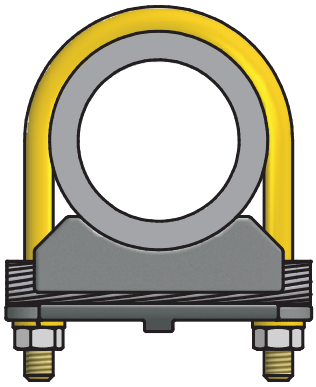

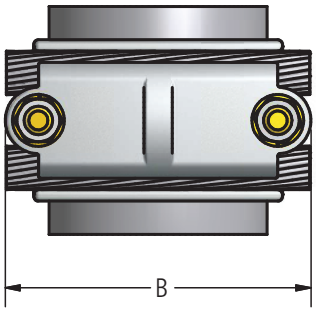

Ordering Information

CATALOG NUMBER	ROD	SPS	CABLE RANGE		DIMENSIONS IN INCHES			U-BOLT SIZE
			MIN	MAX	B	H	W	
GS25-4-AA	1/2	1/4	8 SOL	4 STR	1-13/16	2-1/8	1-7/16	3/8
GS25-13-AA	1/2	1/4	4 SOL	2/0 STR	1-13/16	2-1/4	1-7/8	3/8
GS25-25-AA	1/2	1/4	2/0 SOL	250 MCM	1-13/16	2-7/16	2	3/8
GS38-4-AA	5/8 or 3/4	3/8	8 SOL	4 STR	2	2-5/16	1-7/16	3/8
GS38-13-AA	5/8 or 3/4	3/8	4 SOL	2/0 STR	2	2-1/2	1-7/8	3/8
GS38-25-AA	5/8 or 3/4	3/8	2/0 SOL	250 MCM	2	2-5/8	2	3/8
GS38-50-AA	5/8 or 3/4	3/8	300 MCM	500 MCM	2-1/2	3-3/16	2-3/8	1/2
GS75-4-AA	7/8 or 1	1/2 or 3/4	8 SOL	4 STR	2-3/8	2-3/4	1-7/16	3/8
GS75-13-AA	7/8 or 1	1/2 or 3/4	4 SOL	2/0 STR	2-3/8	2-15/16	1-7/8	3/8
GS75-25-AA	7/8 or 1	1/2 or 3/4	2/0 SOL	250 MCM	2-3/8	3-1/16	2-3/16	3/8
GS75-50-AA	7/8 or 1	1/2 or 3/4	300 MCM	500 MCM	2-7/8	3-1/2	2-7/8	1/2
GS100-4-AA	-	1	8 SOL	4 STR	2-5/8	3-1/16	1-7/16	3/8
GS100-13-AA	-	1	4 SOL	2/0 STR	2-5/8	3-3/16	1-7/8	3/8
GS100-25-AA	-	1	2/0 SOL	250 MCM	2-5/8	3-3/8	2-3/16	3/8
GS100-50-AA	-	1	300 MCM	500 MCM	3-1/8	3-15/16	2-7/8	1/2
GS100-75-AA	-	1	500 MCM	750 MCM	3-1/8	4-1/8	3-1/4	1/2

© 2010, AFL, all rights reserved. PP-3-00359, Revision 0, 11.09.10
Specifications are subject to change without notice.

DOSSERT®
TYPE GW-AA

Grounding Clamp for 2 Cables to Pipe in Parallel

Ground clamp is designed to clamp two cables to pipe.

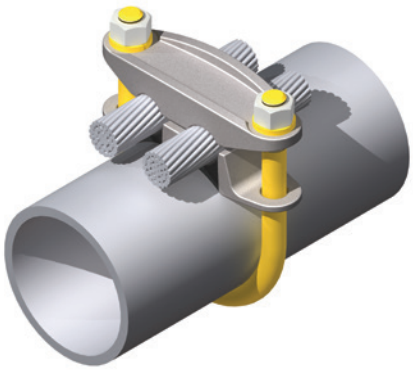

Material

Aluminum Alloy

Hardware

Yellow anodized aluminum nuts, U-bolt and lockwashers.

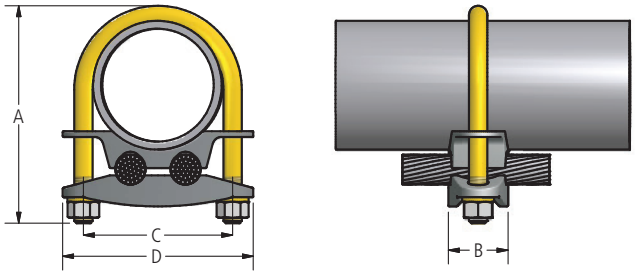

Ordering Information

CATALOG NUMBER	GROUND ROD	SPS	CONDUCTOR RANGE ACC		U-BOLT SIZE	DIMENSIONS IN INCHES			
			MIN	MAX		A	B	C	D
GW75-4-AA	7/8 or 1	3/4	#8 Sol.	#4 Str.	3/8	-	-	-	-
GW75-13-AA	7/8 or 1	3/4	#4 Sol.	2/0 Str.	3/8	-	-	-	-
GW75-25-AA	7/8 or 1	3/4	2/0 Sol.	250 MCM	3/8	-	-	-	-
GW75-50-AA	7/8 or 1	3/4	300 MCM	500 MCM	3/8	-	-	-	-
GW100-4-AA	1 1/8-1 1/4	1	#8 Sol.	#4 Str.	3/8	2 7/8	1 1/8	1 3/4	2 9/16
GW100-13-AA	1 1/8-1 1/4	1	#4 Sol.	2/0 Str.	3/8	3	1 1/8	1 3/4	2 9/16
GW100-25-AA	1 1/8-1 1/4	1	2/0 Sol.	250 MCM	3/8	3 3/8	1 1/8	1 3/4	2 9/16
GW125-4-AA	1 3/8- 1 5/8	1 1/4	#8 Sol.	#4 Str.	3/8	3 3/16	1 3/8	2 1/8	3
GW125-13-AA	1 3/8- 1 5/8	1 1/4	#4 Sol.	2/0 Str.	3/8	3 3/8	1 3/8	2 1/8	3
GW125-25-AA	1 3/8- 1 5/8	1 1/4	2/0 Sol.	250 MCM	3/8	3 5/8	1 7/16	2 1/8	3
GW150-4-AA	1 5/8- 1 7/8	1 1/2	#8 Sol.	#4 Str.	3/8	3 1/2	1 3/8	2 3/8	3 1/4
GW150-13-AA	1 5/8- 1 7/8	1 1/2	#4 Sol.	2/0 Str.	3/8	3 11/16	1 3/8	2 3/8	3 1/4
GW150-25-AA	1 5/8- 1 7/8	1 1/2	2/0 Sol.	250 MCM	3/8	3 3/4	1 7/16	2 3/8	3 1/4
GW150-50-AA	1 5/8- 1 7/8	1 1/2	300 MCM	500 MCM	1/2	4 3/8	1 9/16	2 1/2	3 1/4
GW200-4-AA	2- 2 1/2	2	#8 Sol.	#4 Str.	3/8	4	1 3/8	2 13/16	3 5/8
GW200-13-AA	2- 2 1/2	2	#4 Sol.	2/0 Str.	3/8	4 3/8	1 3/8	2 13/16	3 5/8
GW200-25-AA	2- 2 1/2	2	2/0 Sol.	250 MCM	3/8	4 1/2	1 7/16	2 13/16	3 5/8
GW200-50-AA	2- 2 1/2	2	300 MCM	500 MCM	1/2	4 7/8	1 9/16	2 15/16	4
GW250-4-AA	2 5/8-2 7/8	2 1/2	#8 Sol.	#4 Str.	3/8	4 1/2	1 3/8	3 5/16	4 3/16
GW250-13-AA	2 5/8-2 7/8	2 1/2	#4 Sol.	2/0 Str.	3/8	4 3/4	1 3/8	3 5/16	4 3/16
GW250-25-AA	2 5/8-2 7/8	2 1/2	2/0 Sol.	250 MCM	3/8	4 7/8	1 7/16	3 5/16	4 3/16
GW250-50-AA	2 5/8-2 7/8	2 1/2	300 MCM	500 MCM	1/2	5 1/4	1 9/16	3 7/16	4 5/8
GW300-13-AA	3 1/4- 3 1/2	3	#4 Sol.	2/0 Str.	3/8	5 7/16	1 3/8	4	4 7/8
GW300-25-AA	3 1/4- 3 1/2	3	2/0 Sol.	250 MCM	3/8	5 9/16	1 7/16	4	4 7/8
GW300-50-AA	3 1/4- 3 1/2	3	300 MCM	500 MCM	1/2	5 7/8	1 9/16	4 1/8	5 3/16
GW350-4-AA	3 3/4- 4	3 1/2	#8 Sol.	#4 Str.	3/8	5 5/8	1 1/2	4 7/16	5 3/8
GW350-13-AA	3 3/4- 4	3 1/2	#4 Sol.	2/0 Str.	3/8	5 7/8	1 1/2	4 7/16	5 3/8
GW350-25-AA	3 3/4- 4	3 1/2	2/0 Sol.	250 MCM	3/8	6 1/8	1 1/2	4 7/16	5 3/8
GW350-50-AA	3 3/4- 4	3 1/2	300 MCM	500 MCM	1/2	6 3/8	1 5/8	4 9/16	5 3/4
GW400-4-AA	4 1/4- 4 1/2	4	#8 Sol.	#4 Str.	3/8	6 1/8	1 5/8	4 15/16	5 7/8
GW400-13-AA	4 1/4- 4 1/2	4	#4 Sol.	2/0 Str.	3/8	6 1/4	1 5/8	4 15/16	5 7/8
GW400-25-AA	4 1/4- 4 1/2	4	2/0 Sol.	250 MCM	3/8	6 1/2	1 5/8	4 15/16	5 7/8
GW400-50-AA	4 1/4- 4 1/2	4	300 MCM	500 MCM	1/2	6 7/8	1 5/8	5 1/16	6 3/16

© 2010, AFL, all rights reserved. PP-3-00363, Revision 0, 11.09.10
Specifications are subject to change without notice.

DOSSERT®

TYPE GCHV-AA
Cable Grounding Clamp

Designed to de-energize cable for maintenance.



Material

Aluminum Alloy

Hardware

Yellow anodized aluminum bolts, nuts, and lockwashers.

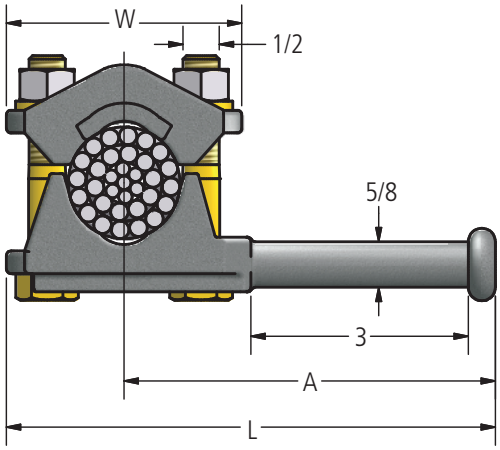

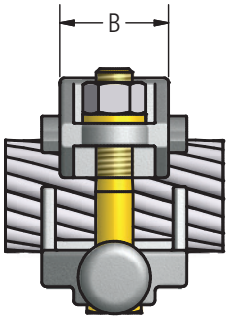

Ordering Information

CATALOG NUMBER	CABLE RANGE		DIMENSIONS			
	MIN	MAX	A	B	L	W
GCHV-40-62R-AA	1/0 STR	400 MCM	4 11/16	1 1/2	5 13/16	2 1/4
GCHV-159A-62R-AA	477 MCM	1590 ACSR	5 1/8	2	6 3/4	3 1/4
GCHV-287A-62R-AA	1780 ACSR	2870 ACSR	5 3/8	2	7 1/4	3 3/4

© 2011, AFL, all rights reserved. PP-3-00339. Revision 0, 1.19.11
Specifications are subject to change without notice.

DOSSERT®

TYPE GPH-AA

Ground Clamp



Designed to de-energize bus tube for maintenance. Stud is designed with tee shape for use on different bus sizes.

Material

Aluminum Alloy

Hardware

Aluminum bolts, nuts, and lockwashers.

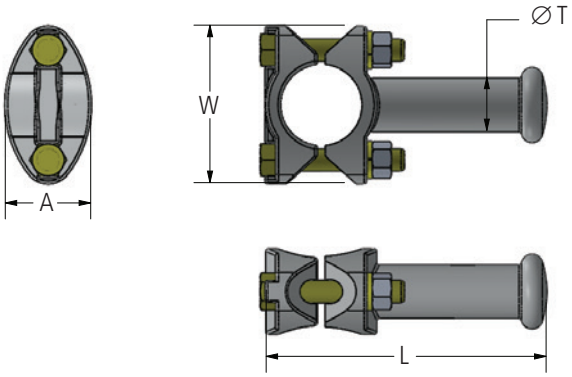

FIGURE 1

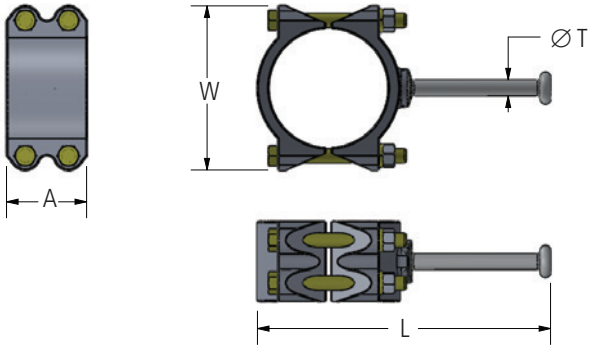

FIGURE 2

Ordering Information

CATALOG NO.	FIGURE NO.	SPS	DIMENSIONS				BOLT SIZE
			A	L	T	W	
GPH150-AA	1	1 1/2	2	6 9/16	1 1/4	3 11/16	1/2
GPH200-AA	1	2	2	7 1/4	1 1/4	4 5/16	1/2
GPH250-AA	1	2 1/2	2	7 9/16	1 1/4	4 3/4	1/2
GPH300-AA	1	3	2	8 1/4	1 1/4	5 3/8	1/2
GPH350-AA	1	3 1/2	2	8 15/16	1 1/4	5 7/8	1/2
GPH400-AA	1	4	2	9 1/4	1 1/4	6 3/8	1/2
GPH500-AA	2	5	3 3/4	13 3/4	3/4	7 11/16	5/8
GPH600-AA	2	6	4	14 11/16	3/4	8 3/4	5/8

© 2011, AFL, all rights reserved. PP-3-00354, Revision 3, 3.21.18
Specifications are subject to change without notice.

DOSSERT®
TYPE GPH-N-AA

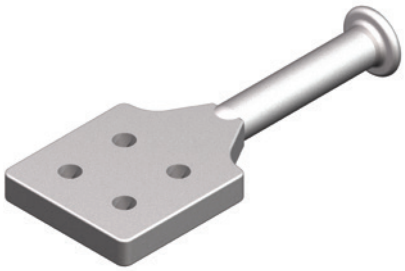

Terminal pad to grounding stud.

Material
Aluminum Alloy

Note
Other pad configurations can be ordered by contacting Customer Service.

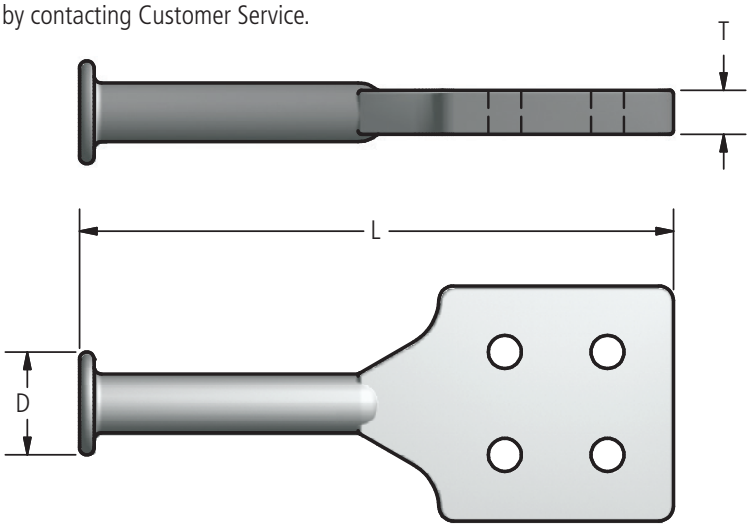

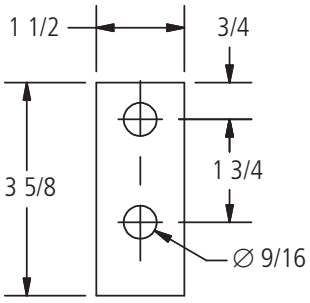

FIG. 1

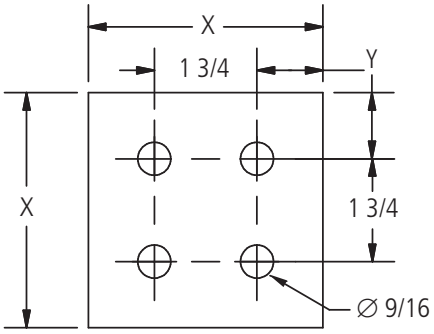

FIG. 2

Ordering Information

CATALOG NUMBER	FIGURE NUMBER	DIMENSIONS				
		D	L	T	X	Y
GPH-2N-AA	1	1 1/4	8 5/8	1/2	—	—
GPH-4N-AA	2	1 3/4	9 1/8	3/4	3	5/8
GPH-4N4-AA	2	1 3/4	10 1/8	3/4	4	1 1/8

© 2011, AFL, all rights reserved. PP-3-00355, Revision 2, 10.23.17
Specifications are subject to change without notice.

230 kV Aluminum Bolted Parallel Clamps

DOSSERT®

TYPE AC, ACA

Parallel Clamp

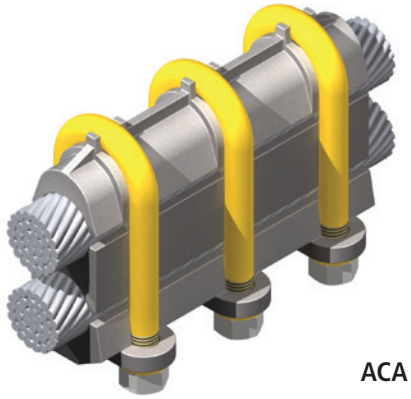

ACA

Material

Aluminum Alloy

Hardware

AC Galvanized steel U-bolts, nuts, and lockwashers.

ACA Yellow anodized aluminum U-bolts, nuts, and lockwashers.

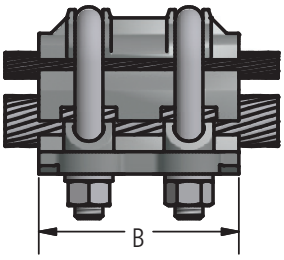

FIG. 1

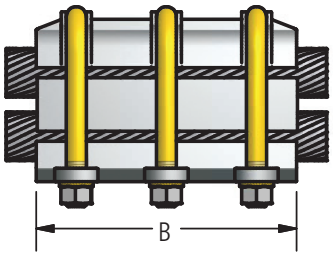

FIG. 2

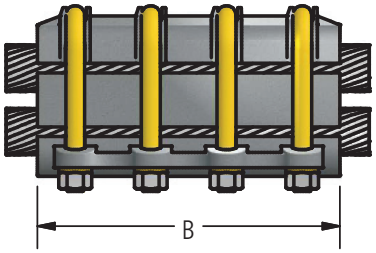

FIG. 3

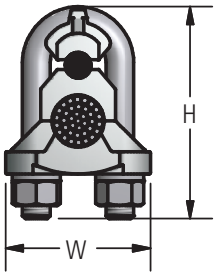

Ordering Information

CATALOG NUMBER		FIG. NO.	ACSR RANGE				ALUMINUM RANGE				DIMENSIONS IN INCHES			BOLT SIZE
			MAIN		TAP		MAIN		TAP					
AC	ACA		MIN	MAX	MIN	MAX	MIN	MAX	MIN	MAX	B	H	W	
AC401	ACA401	1	#2 SOL	1/0 STR	#2 SOL	1/0 STR	#2 SOL	2/0 STR	#2 SOL	2/0 STR	3	3 1/4	2 3/8	1/2
AC402	ACA402	1	2/0 STR	3/0 STR	#2 SOL	1/0 STR	3/0 STR	4/0 STR	#2 SOL	2/0 STR	3 3/8	3 1/2	2 3/8	1/2
AC403	ACA403	1	2/0 STR	3/0 STR	2/0 STR	3/0 STR	3/0 STR	4/0 STR	3/0 STR	4/0 STR	3 3/8	3 1/2	2 3/8	1/2
AC404	ACA404	1	3/0 STR	300 MCM	#2 SOL	1/0 STR	4/0 STR	350 MCM	#2 SOL	2/0 STR	3 5/8	3 5/8	2 1/2	1/2
AC405	ACA405	1	3/0 STR	300 MCM	2/0 STR	3/0 STR	4/0 STR	350 MCM	3/0 STR	4/0 STR	3 5/8	3 7/8	2 1/2	1/2
AC406	ACA406	1	3/0 STR	300 MCM	3/0 STR	300 MCM	4/0 STR	350 MCM	4/0 STR	350 MCM	3 5/8	3 7/8	2 1/2	1/2
AC407	ACA407	1	300 MCM	397.5 MCM	#2 SOL	1/0 STR	350 MCM	477 MCM	#2 SOL	2/0 STR	3 7/8	4 3/8	3	5/8
AC408	ACA408	1	300 MCM	397.5 MCM	2/0 STR	3/0 STR	350 MCM	477 MCM	3/0 STR	4/0 STR	3 7/8	4 3/8	3	5/8
AC409	ACA409	1	300 MCM	397.5 MCM	3/0 STR	300 MCM	350 MCM	477 MCM	4/0 STR	350 MCM	3 7/8	4 5/8	3	5/8
AC410	ACA410	1	300 MCM	397.5 MCM	300 MCM	397.5 MCM	350 MCM	477 MCM	350 MCM	477 MCM	3 7/8	4 5/8	3	5/8
AC411	ACA411	1	397.5 MCM	605 MCM	2/0 STR	3/0 STR	500 MCM	715.5 MCM	500 MCM	715.5 MCM	4 3/8	4 3/4	3 1/8	5/8
AC412	ACA412	1	397.5 MCM	605 MCM	3/0 STR	300 MCM	500 MCM	715.5 MCM	4/0 STR	350 MCM	4 3/8	4 3/4	3 1/8	5/8
AC413	ACA413	1	397.5 MCM	605 MCM	300 MCM	397.5 MCM	500 MCM	715.5 MCM	350 MCM	477 MCM	4 3/8	5	3 1/8	5/8
AC414	ACA414	1	397.5 MCM	605 MCM	397.5 MCM	605 MCM	500 MCM	715.5 MCM	500 MCM	715.5 MCM	4 3/8	5	3 1/8	5/8
AC415	ACA415	1	605 MCM	900 MCM	3/0 STR	300 MCM	750 MCM	1033.5 MCM	4/0 STR	350 MCM	4 3/4	5 1/8	3 3/8	5/8
AC416	ACA416	1	605 MCM	900 MCM	300 MCM	397.5 MCM	750 MCM	1033.5 MCM	350 MCM	477 MCM	4 3/4	5 1/8	3 3/8	5/8
AC417	ACA417	1	605 MCM	900 MCM	397.5 MCM	605 MCM	750 MCM	1033.5 MCM	500 MCM	715.5 MCM	4 3/4	5 1/2	3 3/8	5/8
AC418	ACA418	1	605 MCM	900 MCM	605 MCM	900 MCM	750 MCM	1033.5 MCM	750 MCM	1033.5 MCM	4 3/4	5 1/2	3 3/8	5/8
AC418S	ACA418S	1	477 MCM	636.4 MCM	2/0 STR	336.4 MCM	477 MCM	795 MCM	477 MCM	795 MCM	4 3/4	4 7/8	3 1/8	5/8
AC450	ACA450	1	1/0 STR	336.4 MCM	1/0 STR	336.4 MCM	1/0 STR	397.5 MCM	1/0 STR	397.5 MCM	3 5/8	4 3/16	2 1/2	1/2

continued

© 2011, AFL, all rights reserved. PP-3-00206. Revision 4, 7.14.2022
Specifications are subject to change without notice.

230 kV Aluminum Bolted Parallel Clamps

DOSSERT®

TYPE AC, ACA

Parallel Clamp

Ordering Information

CATALOG NUMBER		FIG. NO.	ACSR RANGE				ALUMINUM RANGE				DIMENSIONS IN INCHES			BOLT SIZE
			MAIN		TAP		MAIN		TAP					
AC	ACA		MIN	MAX	MIN	MAX	MIN	MAX	MIN	MAX	B	H	W	
AC460	ACA460	1	300 MCM	795 MCM	1/0 STR	336.4 MCM	336.4 MCM	954 MCM	1/0 STR	397.5 MCM	4 5/8	4 15/16	3 1/16	1/2
AC462	ACA462	1	336.4 MCM	795 MCM	110.8 MCM	447 MCM	397.5 MCM	954 MCM	3/0 STR	500 MCM	4 5/8	4 15/16	3 1/16	1/2
AC470	ACA470	1	300 MCM	795 MCM	300 MCM	795 MCM	336.4 MCM	954 MCM	336.4 MCM	954 MCM	4 5/8	5 9/16	3 7/32	5/8
AC480	ACA480	1	795 MCM	1033.5 MCM	795 MCM	1033.5 MCM	800 MCM	1113 MCM	800 MCM	1113 MCM	4 5/8	5 3/4	3 1/4	5/8
AC504	ACA504	2	397.5 MCM	605 MCM	397.5 MCM	605 MCM	500 MCM	715.5 MCM	500 MCM	715.5 MCM	5 7/8	5	3 1/8	5/8
AC505	ACA505	2	605 MCM	900 MCM	3/0 STR	300 MCM	750 MCM	1033.5 MCM	4/0 STR	350 MCM	6 3/4	5 1/8	3 3/8	5/8
AC506	ACA506	2	605 MCM	900 MCM	300 MCM	397.5 MCM	750 MCM	1033.5 MCM	350 MCM	477 MCM	6 3/4	5 1/8	3 3/8	5/8
AC507	ACA507	2	605 MCM	900 MCM	397.5 MCM	605 MCM	750 MCM	1033.5 MCM	500 MCM	715.5 MCM	6 3/4	5 1/2	3 3/8	5/8
AC508	ACA508	2	605 MCM	900 MCM	605 MCM	900 MCM	750 MCM	1033.5 MCM	750 MCM	1033.5 MCM	6 3/4	5 1/2	3 3/8	5/8
AC509	ACA509	2	954 MCM	1192.5 MCM	300 MCM	397.5 MCM	1113 MCM	1351.5 MCM	350 MCM	477 MCM	8	6	3 7/8	3/4
AC510	ACA510	2	954 MCM	1192.5 MCM	397.5 MCM	605 MCM	1113 MCM	1351.5 MCM	500 MCM	715.5 MCM	8	6	3 7/8	3/4
AC511	ACA511	2	954 MCM	1192.5 MCM	605 MCM	900 MCM	1113 MCM	1351.5 MCM	750 MCM	1033.5 MCM	8	6 3/8	3 7/8	5/8
AC512	ACA512	2	954 MCM	1192.5 MCM	954 MCM	1192.5 MCM	1113 MCM	1351.5 MCM	1113 MCM	1351.5 MCM	8	6 3/8	3 7/8	3/4
AC513	ACA513	2	1272 MCM	1590 MCM	397.5 MCM	605 MCM	1431 MCM	1750 MCM	500 MCM	715.5 MCM	9 3/4	6 5/16	4	3/4
AC514	ACA514	2	1272 MCM	1590 MCM	605 MCM	900 MCM	1431 MCM	1750 MCM	750 MCM	1033.5 MCM	9 3/4	6 5/8	4 1/8	3/4
AC515	ACA515	2	1272 MCM	1590 MCM	954 MCM	1192.5 MCM	1431 MCM	1750 MCM	1113 MCM	1351.5 MCM	9 3/4	7	4 1/8	3/4
AC516	ACA516	2	1033.5 MCM	1590 MCM	1033.5 MCM	1590 MCM	1033.5 MCM	1750 MCM	1033.5 MCM	1750 MCM	9 3/4	7	4 1/8	5/8
AC518	ACA518	2	1780 MCM	2300 MCM	605 MCM	1033.5 MCM	2000 MCM	2500 MCM	700 MCM	1192.5 MCM	9 3/4	6 1/2	4 5/16	5/8
AC520	ACA520	2	1780 MCM	2300 MCM	1780 MCM	2300 MCM	2000 MCM	2500 MCM	2000 MCM	2500 MCM	9 3/4	7 3/8	4 5/16	5/8
AC604	ACA604	3	336.4 MCM	397.5 MCM	336.4 MCM	397.5 MCM	350 MCM	477 MCM	350 MCM	477 MCM	7	4 1/2	2 1/2	1/2
AC605	ACA605	3	397.5 MCM	605 MCM	336.4 MCM	397.5 MCM	500 MCM	715.5 MCM	350 MCM	477 MCM	7	4 3/4	2 11/16	1/2
AC606	ACA606	3	397.5 MCM	605 MCM	397.5 MCM	605 MCM	500 MCM	715.5 MCM	500 MCM	715.5 MCM	7 1/2	4 3/4	2 11/16	1/2
AC607	ACA607	3	605 MCM	900 MCM	336.4 MCM	397.5 MCM	715.5 MCM	1033.5 MCM	350 MCM	477 MCM	7 1/2	4 7/8	2 15/16	1/2
AC608	ACA608	3	605 MCM	900 MCM	397.5 MCM	605 MCM	715.5 MCM	1033.5 MCM	500 MCM	715.5 MCM	7 1/2	4 7/8	2 15/16	1/2
AC609	ACA609	3	605 MCM	900 MCM	605 MCM	900 MCM	715.5 MCM	1033.5 MCM	715.5 MCM	1033.5 MCM	7 1/2	4 7/8	2 15/16	1/2
AC610	ACA610	3	954 MCM	1192.5 MCM	336.4 MCM	397.5 MCM	1000 MCM	1351.5 MCM	350 MCM	477 MCM	10	5 1/4	3 7/16	5/8
AC611	ACA611	3	954 MCM	1192.5 MCM	397.5 MCM	605 MCM	1000 MCM	1351.5 MCM	500 MCM	715.5 MCM	10	5 1/4	3 7/16	5/8
AC612	ACA612	3	954 MCM	1192.5 MCM	605 MCM	900 MCM	1000 MCM	1351.5 MCM	715.5 MCM	1033.5 MCM	10	5 3/4	3 7/16	5/8
AC613	ACA613	3	954 MCM	1192.5 MCM	954 MCM	1192.5 MCM	1000 MCM	1351.5 MCM	1000 MCM	1351.5 MCM	10	5 3/4	3 7/16	5/8
AC614	ACA614	3	1272 MCM	1590 MCM	336.4 MCM	397.5 MCM	1431 MCM	1750 MCM	350 MCM	477 MCM	10	5 3/8	3 5/8	5/8
AC615	ACA615	3	1272 MCM	1590 MCM	397.5 MCM	605 MCM	1431 MCM	1750 MCM	500 MCM	715.5 MCM	10	5 5/8	3 5/8	5/8
AC616	ACA616	3	1272 MCM	1590 MCM	605 MCM	900 MCM	1431 MCM	1750 MCM	715.5 MCM	1033.5 MCM	10	5 3/4	3 5/8	5/8
AC617	ACA617	3	1272 MCM	1590 MCM	954 MCM	1192.5 MCM	1431 MCM	1750 MCM	1000 MCM	1351.5 MCM	10	6	3 5/8	5/8
AC618	ACA618	3	1272 MCM	1590 MCM	1272 MCM	1590 MCM	1431 MCM	1750 MCM	1431 MCM	1750 MCM	10	6	3 5/8	5/8

© 2011, AFL, all rights reserved. PP-3-00206. Revision 4, 7.14.2022
Specifications are subject to change without notice.

DOSSERT®
TYPE AC100-AA
Parallel Connector

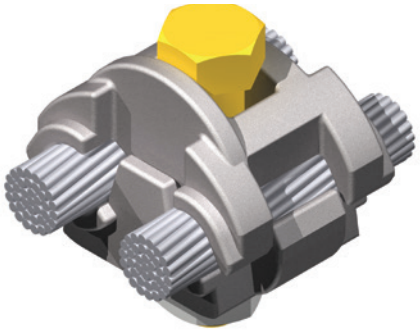

Single bolt type parrallel connector for joining two cables. Bolt retainer built into casting for one wrench installation.

Material
Aluminum Alloy

Hardware
ACA100 Series: Aluminum bolts, lockwashers and nuts
AC100 series: Galvanized steel bolts, lockwashers and nuts

Notes
1. For Stainless Belleville washers and add "-BW" to catalog number. EX: AC102-BW
2. For Electro Tin plate add "-SN" to catalog number. EX: ACA103-SN
3. For ALNOX prefilled connector add "-LP" to catalog number. EX: AC103-LP

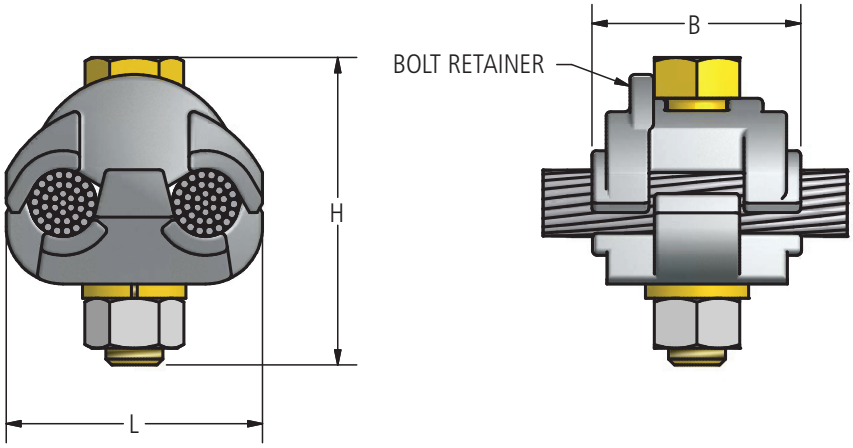

Ordering Information

CATALOG NUMBER		CABLE RANGE								DIMENSIONS IN INCHES			BOLT SIZE
		RUN				TAP							
		ACC		ACSR		ACC		ACSR		B	H	L	
AC100	ACA100	#8 SOL	1/0 STR	#8STR	1/0 ACSR	#8 SOL	1 STR	#8STR	#2 ACSR	1 1/8	1 15/16	1 3/8	5/16
AC101	ACA101	#8 SOL	1/0 STR	#8STR	1/0 ACSR	#8 SOL	1/0 STR	#8STR	1/0 ACSR	1 3/8	2	1 3/4	3/8
AC102	ACA102	#4 SOL	4/0 STR	#4STR	4/0 ACSR	#4 SOL	4/0 STR	#4STR	4/0 ACSR	2	2 5/8	2 1/8	1/2
AC103	ACA103	#4 SOL	350 MCM	#4STR	336.4 MCM ACSR	#8 SOL	2/0 STR	#8STR	2/0 ACSR	1 13/16	2 1/4	2 1/16	3/8
AC122	ACA122	#2 SOL	500 MCM	#2STR	397.5 MCM ACSR	#6 SOL	3/0 STR	#6STR	3/0 ACSR	2 1/4	2 3/4	2 3/8	1/2
AC124	ACA124	1/0 STR	1033.5 MCM	1/0 STR	954 MCM ACSR	#2 SOL	4/0 STR	#4STR	4/0 ACSR	2 9/16	2 3/8	3	5/8

© 2011, AFL, all rights reserved. PP-3-00207, Revision 1, 6.24.14
Specifications are subject to change without notice.

DOSSERT®

TYPE PC-AA

Connector For Two Cables In Parallel

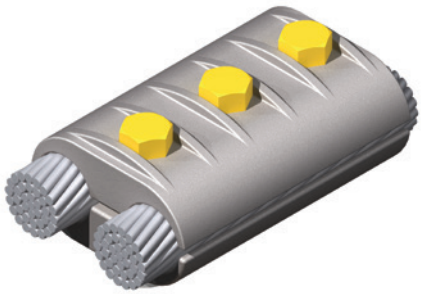

A clamp type connector for connecting two cable or wire conductors in parallel. Each connector listed show a equal run and tap only. However, any combination accommodating unequal size cables is avaliable.

Material

Aluminum Alloy

Hardware

Yellow anodized aluminum bolts, nuts and lockwashers.

Notes

1. To order an unequal size cable clamp create a catalog number. EX: for a 636 MCM run and 300 MCM tap Order: PC65-30-AA.

2. For Galvanized steel hardware add suffix "-GS" to catalog number order: PC65-30-AA-GS.

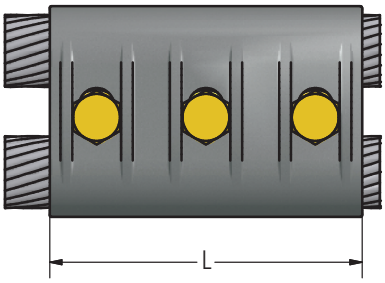

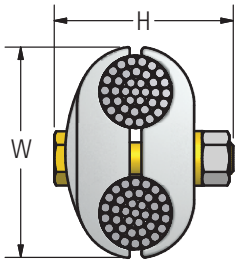

Ordering Information

CATALOG NUMBER	CONDUCTOR RANGE				DIMENSIONS IN INCHES			BOLT SIZE
	ACSR		ALUM. OR CU.					
	MIN	MAX	MIN	MAX	H	L	W	
PC10-10-AA	1(6/1)	80(8/1)	2/0 SOL	1/0 STR	1 3/4	3	1 17/32	1/2
PC13-13-AA	1/0(6/1)		3/0 SOL	2/0 STR	1 3/4	3	1 5/8	1/2
PC17-17-AA	2/0	110.8(12/7)	4/0 SOL	3/0 STR	2	4	1 27/32	1/2
PC21-21-AA	3/0	134.6(12/7)	4/0 STR		2	4	2 1/32	1/2
PC25-25-AA	4/0	203(8/7)	250 MCM	266.8 MCM	2 1/4	4	2 1/16	1/2
PC30-30-AA	176.9(12/7)	266.8(26/7)	300 MCM		2 1/4	4 1/2	2 9/32	1/2
PC35-35-AA	211.3(12/7)	336.4(18/1)	336.4 MCM	350 MCM	2 1/4	4 1/2	2 3/8	1/2
PC40-40-AA	203.2(16/19)	397.5(18/1)	394.5 MCM	400 MCM	2 1/2	5	2 1/2	1/2
PC50-50-AA	397.5(26/7)	477(18/1)	450 MCM	500 MCM	2 1/2	5	2 5/8	1/2
PC60-60-AA	477(24/7)	477(30/7)	550 MCM	600 MCM	2 1/2	5	2 27/32	1/2
PC65-65-AA	500(30/7)	636(36/1)	636 MCM	650 MCM	2 1/2	5	3	1/2
PC75-75-AA	605(26/7)	666.6(24/7)	700 MCM	750 MCM	2 1/2	5 1/4	3 1/16	1/2
PC80-80-AA	715.5(24/7,26/7)	795(36/1)	795 MCM	800 MCM	2 1/2	5 1/4	3 1/8	1/2
PC103-103-AA	795(24/7)	954(54/7)	900 MCM	1033.5 MCM	2 3/4	5 1/2	3 3/8	1/2
PC127-127-AA	1033.5(36/1)	1113(54/19)	1100 MCM	1272 MCM	3	5 1/2	3 5/8	1/2
PC150-150-AA	1192.5(45/7)	1351.5(54/19)	1300 MCM	1500 MCM	3 1/2	6	4 1/8	5/8
PC175-175-AA	1431(45/7)	1590(54/19)	1590 MCM	1750 MCM	3 1/2	6	4 1/2	5/8
PC200-200-AA	1590(54/19)	1780(54/19)	1800 MCM	2000 MCM	3 1/2	6	4 1/2	5/8

© 2011, AFL, all rights reserved. PP-3-00392, Revision 0, 1.12.11
Specifications are subject to change without notice.

DOSSERT®

TYPE TRV-AA

Parallel Connector

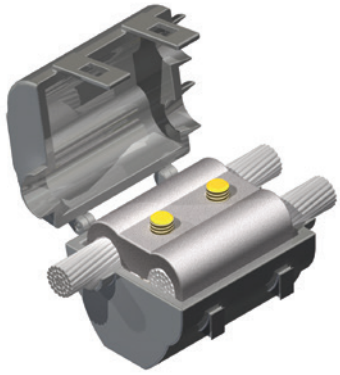

Connects a cable main parallel to a cable tap, features clamping members made of aluminum. The bolts, nuts and lockwashers are stainless steel to enhance clamping efficiency and resistance to corrosion. The assembly is encased in a plastic cover.

Material

Aluminum Alloy

Hardware

Stainless Steel bolts, Belleville spring washers, and Neoprene bolt retainers.

Cover

Black Polyethylene

Note

For conductor grooves coated with Alnox, order by adding prefix -LP.
EX: TRV10-10-AA-LP

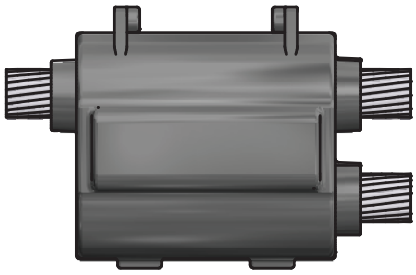

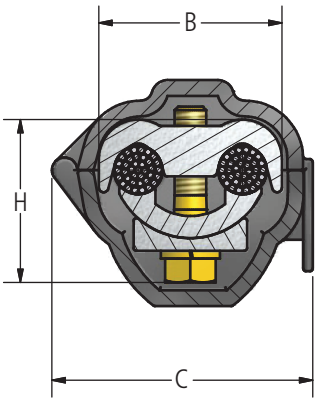

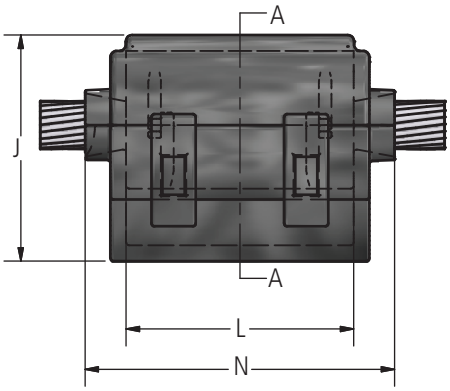

Ordering Information

CATALOG NUMBER	CABLE RANGE				DIMENSIONS IN INCHES						BOLT SIZE
	RUN		TAP								
	MIN	MAX	MIN	MAX	B	C	H	J	L	N	
TRV10-10-AA	#8	# 1/0	#8	# 1/0	1.500	2 11/32	1.370	1 25/32	1.620	2 5/8	5/16
TRV10-35-AA	#8	# 1/0	# 3/0	350	2.090	2 15/16	1.900	2 7/32	2.120	3 1/8	3/8
TRV17-10-AA	#4	# 3/0	#8	# 1/0	1.700	2 19/32	1.610	2 1/32	2.120	3 1/8	3/8
TRV17-17-AA	#4	# 3/0	#4	# 3/0	1.750	2 19/32	1.610	2 1/32	2.120	3 1/8	3/8
TRV35-10-AA	# 3/0	350	#8	# 1/0	2.090	2 15/16	1.900	2 7/32	2.120	3 1/8	3/8
TRV35-35-AA	# 3/0	350	# 3/0	350	2.310	3 5/32	1.910	2 1/4	2.120	3 1/8	3/8

© 2011, AFL, all rights reserved. PP-3-00484, Revision 0, 1.08.11
Specifications are subject to change without notice.

DOSSERT®

Distribution Parallel Groove Clamps
(Series 390 and 490)

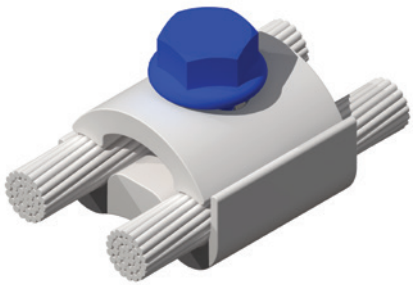

Catalog 390 and Catalog 490 Series Distribution Parallel Groove Clamps with a single bolt accomodate a range of conductors in each groove. This type of clamp is commonly used for service drop connections and as a tap from large to relatively small conductors.

Material
Aluminum Alloy

Hardware
Blue anodized bolt.

Notes
1. To order Parallel Groove Clamps prefilled with Alnox Compound, add P or W suffix to part number. See ordering information below.
2. The use of Alnox Compound liberally in grooves and on wire is recommended. Be sure conductors are clean. All conductors (new and old) should be thoroughly cleaned with a scratch brush or emery cloth.
3. Extensive field experience and exposure tests show that if a suitable type joint compound is liberally applied over and around the contact area, copper-to-aluminum electric connections can be made satisfactorily with aluminum clamps without copper bushings. Alnox Compound is recommended.

Ordering Information

CATALOG NUMBER	GROOVE SIZE		BOLT SIZE (IN)	TORQUE (FT-LBS)	NOMINAL WEIGHT (LBS)
	RUN 1	TAP 2			
490.0	0	0	5/16"	10	0.060
395.5	5	5	3/8"	15	0.092
396.6	6	6	3/8"	15	0.129
397.5	7	5	7/16"	20	0.179
392.6	2	6	1/2"	25	0.316
393.6	3	6	5/8"	40	0.642

Standard groove numbers are used for the complete range of clamps and connectors. These numbers are incorporated into the AFL part number itself.

GROOVE SIZE	GROOVE SIZE		CONDUCTOR SIZE			
	DIMENSIONS IN INCHES		ACSR		STRANDED ALUMINUM	
	MIN	MAX	MIN	MAX	MIN	MAX
0	0.128	0.325	6 6/1	2 7/1	8 & 8W	2
5	0.128	0.398	6 6/1	1/0	8 & 8W	1/0
6	0.162	0.464	6 6/1	2/0 6/1	6	3/0
1	0.292	0.502	2 6/1	3/0	2	3/0
7	0.368	0.593	1/0	4/0	1/0	266.8 MCM
2	0.464	0.743	3/0	397 18/1	3/0	400 MCM
3	0.743	1.152	397 18/1	795 26/7	450 MCM	1,000 MCM
4	1.060	1.545	795 45/7	1590 54/19	874.5 MCM	1,750 MCM

Notes
1. NEMA standard abbreviations for aluminum or copper: W = solid conductor, ACSR = aluminum conductor/steel reinforced

© 2011, AFL, all rights reserved. PP-3-00457, Revision 1, 3.1.18
Specifications are subject to change without notice.

DOSSERT®
Center Bolt Clamps Series 480

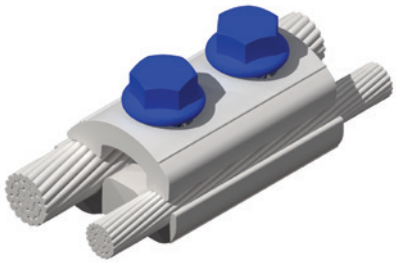

Catalog 480 Series Center Bolt Clamps are a multiple bolt heavy duty universal groove design which can handle the full electrical load of the conductor. They offer the convenience of installation without any loose parts. Catalog 480 Clamps are made from extruded high strength aluminum alloy and can be taped easily. Additionally, they have a minimum bulk, which results in a neat appearance.

Material
Aluminum Alloy

Hardware
Blue anodized bolt.

Notes
1. To order Parallel Groove Clamps prefilled with Alnox Compound, add P or W suffix to part number. See ordering information below.
2. The use of Alnox Compound liberally in grooves and on wire is recommended. Be sure conductors are clean. All conductors (new and old) should be thoroughly cleaned with a scratch brush or emery cloth.
3. Extensive field experience and exposure tests show that if a suitable type joint compound is liberally applied over and around the contact area, copper-to-aluminum electric connections can be made satisfactorily with aluminum clamps without copper bushings. Alnox Compound is recommended.

Ordering Information

CATALOG NUMBER	GROOVE SIZE		NUMBER OF BOLTS	BOLT SIZE (IN)	TORQUE (FT-LBS)	NOMINAL WEIGHT (LBS)
	RUN 1	TAP 2				
486.6	6	6	2	3/8"	15	0.2
481.0	1	0	2	3/8"	15	0.3
481.1	1	1	2	3/8"	15	0.3
482.1	2	1	2	1/2"	25	0.6
482.2	2	2	3	1/2"	25	1.1
483.2	3	2	2	5/8"	40	1.8
483.3	3	3	3	5/8"	40	2.8

Standard groove numbers are used for the complete range of clamps and connectors. These numbers are incorporated into the AFL part number itself.

GROOVE SIZE	GROOVE SIZE		CONDUCTOR SIZE			
	DIMENSIONS IN INCHES		ACSR		STRANDED ALUMINUM	
	MIN	MAX	MIN	MAX	MIN	MAX
0	0.128	0.325	6 6/1	2 7/1	8 & 8W	2
5	0.128	0.398	6 6/1	1/0	8 & 8W	1/0
6	0.162	0.464	6 6/1	2/0 6/1	6	3/0
1	0.292	0.502	2 6/1	3/0	2	3/0
7	0.368	0.593	1/0	4/0	1/0	266.8 MCM
2	0.464	0.743	3/0	397 18/1	3/0	400 MCM
3	0.743	1.152	397 18/1	795 26/7	450 MCM	1,000 MCM
4	1.060	1.545	795 45/7	1590 54/19	874.5 MCM	1,750 MCM

Notes
1. NEMA standard abbreviations for aluminum or copper: W = solid conductor, ACSR = aluminum conductor/steel reinforced

© 2011, AFL, all rights reserved. PP-3-00457, Revision 1, 3.1.18
Specifications are subject to change without notice.

DOSSERT®
U-Bolt Clamps Series 580

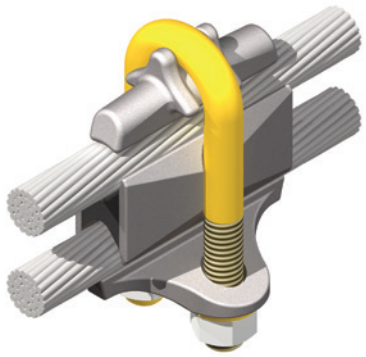

Catalog 580 Series U-Bolt Clamps are heavy duty, high efficiency connectors with AFL full-capacity grooves. The U-Bolts are high strength aluminum alloy for excellent thermal expansion and corrosion resistance characteristics.

Material

Aluminum Alloy

Hardware

Yellow anodized aluminum U-bolts, nuts and lockwashers.

Notes

1. To order Parallel Groove Clamps prefilled with Alnox Compound, add P or W suffix to part number. See ordering information below.
2. The use of Alnox Compound liberally in grooves and on wire is recommended. Be sure conductors are clean. All conductors (new and old) should be thoroughly cleaned with a scratch brush or emery cloth.
3. Extensive field experience and exposure tests show that if a suitable type joint compound is liberally applied over and around the contact area, copper-to-aluminum electric connections can be made satisfactorily with aluminum clamps without copper bushings. Alnox Compound is recommended.

Ordering Information

CATALOG NUMBER	GROOVE SIZE		NUMBER OF BOLTS	BOLT SIZE (IN)	TORQUE (FT-LBS)	NOMINAL WEIGHT (LBS)
	RUN 1	TAP 2				
581.1	1	1	1	3/8"	15	0.3
582.1	2	1	1	1/2"	25	0.6
582.2	2	2	2	1/2"	25	1.3
583.1	3	1	1	5/8"	40	1.1
583.2	3	2	2	5/8"	40	2.6
583.3	3	3	3	5/8"	40	3.9
584.1	4	1	1	5/8"	40	1.7
584.2	4	2	2	5/8"	40	3.6
584.3	4	3	3	5/8"	40	5.8
584.4	4	4	3	5/8"	40	6.0

Standard groove numbers are used for the complete range of clamps and connectors. These numbers are incorporated into the AFL part number itself.

GROOVE SIZE	GROOVE SIZE		CONDUCTOR SIZE			
	DIMENSIONS IN INCHES		ACSR		STRANDED ALUMINUM	
	MIN	MAX	MIN	MAX	MIN	MAX
0	0.128	0.325	6 6/1	2 7/1	8 & 8W	2
5	0.128	0.398	6 6/1	1/0	8 & 8W	1/0
6	0.162	0.464	6 6/1	2/0 6/1	6	3/0
1	0.292	0.502	2 6/1	3/0	2	3/0
7	0.368	0.593	1/0	4/0	1/0	266.8 MCM
2	0.464	0.743	3/0	397 18/1	3/0	400 MCM
3	0.743	1.152	397 18/1	795 26/7	450 MCM	1,000 MCM
4	1.060	1.545	795 45/7	1590 54/19	874.5 MCM	1,750 MCM

Notes

1. NEMA standard abbreviations for aluminum or copper: W = solid conductor, ACSR = aluminum conductor/steel reinforced

© 2011, AFL, all rights reserved. PP-3-00457, Revision 1, 3.1.18
Specifications are subject to change without notice.

DOSSERT®

TYPE UD-AA

Universal Parallel Clamp



A universal clamp to provide a connection for two cables or wires over a wide range of sizes.

Material

Aluminum Alloy

Hardware

Yellow anodized aluminum bolts, nuts and lockwashers.

Notes

Voltage rating is 230 kV

For tin plating add "-SN" to end of catalog number. EX: UD50-21-AA-SN

Add suffix "GS" for galvanized steel hardware. EX: UD50-21-AA-GS

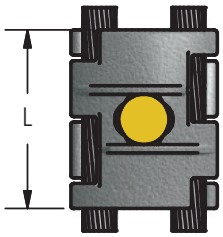

FIG. 1

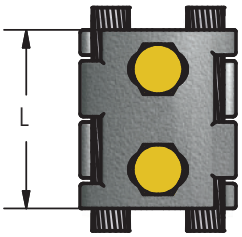

FIG. 2

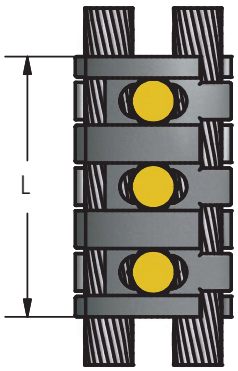

FIG. 3

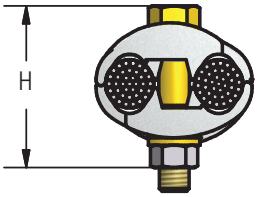

Ordering Information

CATALOG NUMBER	CONDUCTOR RANGE AAC		FIGURE NUMBER	DIMENSIONS IN INCHES		
	MIN	MAX		H	L	BOLT SIZE
UD10-2-AA	#6 SOL.	1/0 STR.	1	1 3/4	2	3/8
UD21-4-AA	#4 SOL.	4/0 STR.	2	2	2 1/4	3/8
UD30-6-AA	#2 SOL.	300 MCM	2	2 1/4	2 1/2	3/8
UD50-21-AA	4/0 STR.	500 MCM	3	2 3/4	4 3/8	1/2
UD80-30-AA	300 MCM	800 MCM	3	3 1/4	4 1/2	1/2
UD100-50-AA	500 MCM	1000 MCM	3	3 1/2	4 5/8	1/2

© 2011, AFL, all rights reserved. PP-3-00491, Revision 0, 1.12.11
Specifications are subject to change without notice.

230 kV Aluminum
Bolted Stud Connectors

DOSSERT®

TYPE SCB-F-AA

Stud Connector to Flat Bar

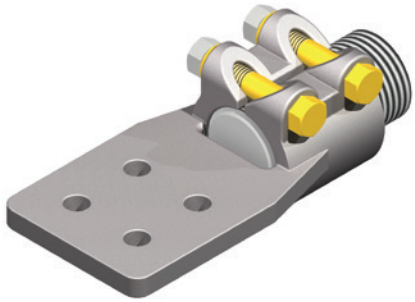

Aluminum Connector for Stud to Flat

Material

Aluminum Alloy

Hardware

Yellow anodized aluminum bolts, nuts, and lockwashers.

Notes

1. Add suffix "-SN" catalog number for tinned plated order: SCB200-1/2F-4N4-T12-AA-SN

2. For special thread sizes change the "-T" in the catalog number. EX: for a 1" stud with no threads order: SCB100-1/4F-2N-T0-AA.

FIG. 1

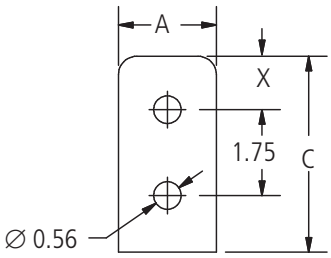

FIG. 2

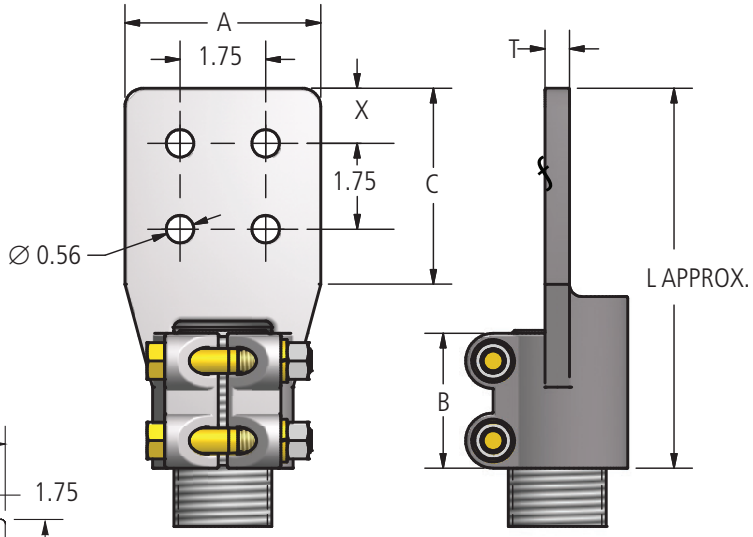

FIG. 3

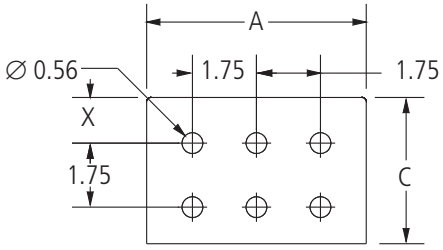

© 2011, AFL, all rights reserved. PP-3-00448, Revision 6, 6.1.18
Specifications are subject to change without notice.

AFL

230 kV Aluminum Bolted Stud Connectors

DOSSERT®

TYPE SCB-F-AA

Stud Connector to Flat Bar

Ordering Information

CATALOG NUMBER	STUD DIAMETER	THREADS PER INCH	FIGURE NUMBER	DIMENSIONS IN INCHES						BOLT SIZE
				A	B	C	L	T	X	
SCB75-1/4F-2N-T16-AA	3/4	16	1	2	2 1/4	3	5 7/8	1/4	5/8	1/2
SCB75-3/8F-3N-T16-AA	3/4	16	2	3	2 1/4	3	5 7/8	3/8	5/8	1/2
SCB75-3/8F-4N-T16-AA	3/4	16	2	4	2 1/4	3	5 7/8	3/8	5/8	1/2
SCB100-1/4F-2N-T14-AA	1	14	1	2	2 1/4	3	5 7/8	1/4	5/8	1/2
SCB100-1/4F-3N-T14-AA	1	14	2	3	2 1/4	3	5 7/8	1/4	5/8	1/2
SCB100-3/8F-3N-T14-AA	1	14	2	3	2 1/4	3	5 7/8	3/8	5/8	1/2
SCB100-3/8F-4N-T14-AA	1	14	2	4	2 1/4	3	5 7/8	3/8	5/8	1/2
SCB100-3/8F-4N4-T14-AA	1	14	2	4	2 1/4	4	6 7/8	3/8	1 1/8	1/2
SCB112-3/8F-2N-T12-AA	1 1/8	12	1	2	2 1/4	3	5 7/8	3/8	5/8	1/2
SCB112-3/8F-3N-T12-AA	1 1/8	12	2	3	2 1/4	3	5 7/8	3/8	5/8	1/2
SCB112-3/8F-4N-T12-AA	1 1/8	12	2	4	2 1/4	3	5 7/8	3/8	5/8	1/2
SCB112-3/8F-4N4-T12-AA	1 1/8	12	2	4	2 1/4	4	5 7/8	3/8	1 1/8	1/2
SCB112-1/2F-3N-T12-AA	1 1/8	12	2	3	2 1/4	3	5 7/8	1/2	5/8	1/2
SCB112-1/2F-4N-T12-AA	1 1/8	12	2	4	2 1/4	3	5 7/8	1/2	5/8	1/2
SCB112-1/2F-4N4-T12-AA	1 1/8	12	2	4	2 1/4	4	6 7/8	1/2	1 1/8	1/2
SCB125-3/8F-3N-T12-AA	1 1/4	12	2	3	2 1/4	3	5 7/8	3/8	5/8	1/2
SCB125-3/8F-4N-T12-AA	1 1/4	12	2	4	2 1/4	3	5 7/8	3/8	5/8	1/2
SCB125-1/2F-3N-T12-AA	1 1/4	12	2	3	2 1/4	3	5 7/8	1/2	5/8	1/2
SCB125-1/2F-4N-T12-AA	1 1/4	12	2	4	2 1/4	3	5 7/8	1/2	5/8	1/2
SCB125-1/2F-4N4-T12-AA	1 1/4	12	2	4	2 1/4	4	6 7/8	1/2	1 1/8	1/2
SCB150-3/8F-3N-T12-AA	1 1/2	12	2	3	2 1/4	3	6 7/8	3/8	5/8	1/2
SCB150-1/2F-3N-T12-AA	1 1/2	12	2	3	2 1/4	3	5 7/8	1/2	5/8	1/2
SCB150-1/2F-4N-T12-AA	1 1/2	12	2	4	2 1/4	3	5 7/8	1/2	5/8	1/2
SCB150-1/2F-4N4-T12-AA	1 1/2	12	2	4	2 1/4	4	6 7/8	1/2	1 1/8	1/2
SCB150-5/8F-3N-T12-AA	1 1/2	12	2	3	2 1/4	3	6 7/8	5/8	5/8	1/2
SCB150-3/4F-4N-T12-AA	1 1/2	12	2	4	2 1/4	3	6 1/2	3/4	5/8	1/2
SCB150-3/4F-4N4-T12-AA	1 1/2	12	2	4	2 1/4	4	6 1/2	3/4	1 1/8	1/2
SCB150-3/4F-6N4-T12-AA	1 1/2	12	3	6	2 3/4	4	7 3/8	3/4	1 1/8	1/2
SCB157-1/2F-4N4-T0-AA	40 MM	0	2	4	2 1/4	4	7 1/2	1/2	1 1/8	1/2
SCB175-1/2F-4N-T12-AA	1 3/4	12	2	3	2 1/4	3	6 1/2	1/2	1 1/8	1/2
SCB200-1/2F-3N-T12-AA	2	12	2	3	2 3/4	3	6 1/2	1/2	5/8	1/2
SCB200-1/2F-4N-T12-AA	2	12	2	4	2 3/4	3	6 1/2	1/2	5/8	1/2
SCB200-1/2F-4N4-T12-AA	2	12	2	4	2 3/4	4	7 1/2	1/2	1 1/8	1/2
SCB200-3/4F-3N-T12-AA	2	12	2	3	2 3/4	3	6 1/2	3/4	5/8	1/2
SCB200-3/4F-4N-T12-AA	2	12	2	4	2 3/4	3	6 1/2	3/4	5/8	1/2
SCB200-3/4F-4N4-T12-AA	2	12	2	4	2 3/4	4	7 1/2	3/4	1 1/8	1/2
SCB200-1F-3N-T12-AA	2	12	2	3	2 3/4	3	6 1/2	1	5/8	1/2
SCB225-5/8F-4N4-T12-AA	2 1/4	12	2	4	2 3/4	4	7 1/2	5/8	1 1/8	1/2
SCB250-3/4F-3N-T12-AA	2 1/2	12	2	3	2 3/4	3	6 1/2	3/4	5/8	1/2
SCB250-3/4F-4N-T12-AA	2 1/2	12	2	4	2 3/4	3	6 1/2	3/4	5/8	1/2
SCB250-3/4F-4N4-T12-AA	2 1/2	12	2	4	2 3/4	4	7 1/2	3/4	1 1/8	1/2
SCB250-7/8F-4N-T12-AA	2 1/2	12	2	4	2 3/4	3	6 1/2	7/8	5/8	1/2
SCB250-7/8F-4N4-T12-AA	2 1/2	12	2	4	2 3/4	4	7 1/2	7/8	1 1/8	1/2
SCB250-1F-6N4-T12-AA	2 1/2	12	3	6	2 3/4	4	7 1/2	1	1 1/8	1/2
SCB300-1/2F-3N-T12-AA	3	12	2	3	2 3/4	3	7 1/4	1/2	5/8	5/8
SCB300-3/4F-3N-T12-AA	3	12	2	3	2 3/4	3	7 1/4	3/4	5/8	5/8
SCB300-3/4F-4N-T12-AA	3	12	2	4	2 3/4	3	7 1/4	3/4	5/8	5/8
SCB300-3/4F-4N4-T12-AA	3	12	2	4	2 3/4	4	8 1/4	3/4	1 1/8	5/8
SCB300-3/4F-6N4-T12-AA	3	12	3	6	2 3/4	4	8 1/4	3/4	1 1/8	5/8
SCB300-1F-3N-T12-AA	3	12	2	3	2 3/4	3	7 1/4	1	5/8	5/8
SCB300-1F-4N-T12-AA	3	12	2	4	2 3/4	3	7 1/4	1	5/8	5/8
SCB300-1F-4N4-T12-AA	3	12	2	4	3 1/2	4	8 5/8	1	1 1/8	5/8
SCB400-1F-4N4-T10-AA	4	10	2	4	3 1/2	4	8 1/2	1	1 1/8	5/8
SCB400-1F-4N4-T12-AA	4	12	2	4	3 1/2	4	8 1/2	1	1 1/8	5/8
SCB500-1-1/4F-6N4-T12-AA	5	12	3	6	4	4	9 1/8	1 1/4	1 1/8	5/8

© 2011, AFL, all rights reserved. PP-3-00448, Revision 6, 6.1.18
Specifications are subject to change without notice.

230 kV Aluminum Bolted Stud Connectors

DOSSERT®

TYPE SCV-AA

Stud Connector to Cable

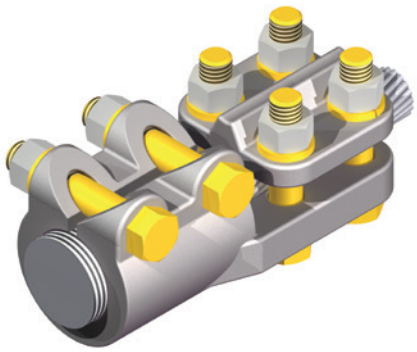

Stud connector is designed for use on aluminum studs. The cable connector is designed with a universal groove which allows a range of aluminum or ACSR conductor for each size.

Material

Aluminum Alloy

Hardware

Yellow anodized aluminum bolts, nuts and lockwashers.

Notes

1. Special thread is available upon request.
2. For no thread replace number after 'T' with a '0'. Ex: SCV50-25-T0-AA

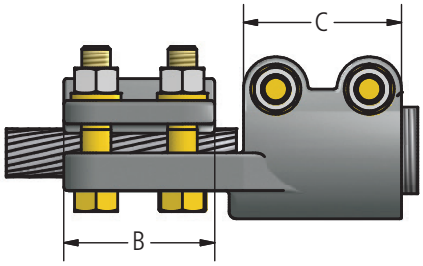

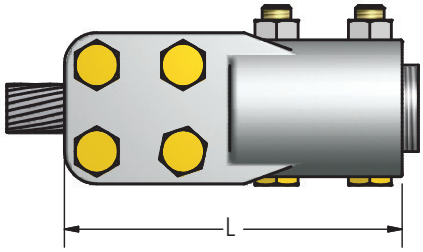

Ordering Information

CATALOG NUMBER	STUD DIA.	THREADS PER INCH	CABLE RANGE		CABLE RANGE ACSR		DIMENSIONS IN INCHES			BOLT SIZE	
			MIN	MAX	MIN	MAX	B	C	L	STUD	CABLE
SCV50-25-T13-AA	1/2	13	1/0	250M	1/0	4/0	3	2 1/4	5 1/2	1/2	1/2
SCV50-40-T13-AA	1/2	13	250M	400M	4/0	397.5	3	2 1/4	5 1/2	1/2	1/2
SCV50-60-T13-AA	1/2	13	350M	600M	336.4	477	3	2 1/4	5 1/2	1/2	1/2
SCV75-25-T16-AA	3/4	16	1/0	250M	1/0	4/0	3	2 1/4	5 1/2	1/2	1/2
SCV75-40-T16-AA	3/4	16	250M	400M	4/0	397.5	3	2 1/4	5 1/2	1/2	1/2
SCV75-60-T16-AA	3/4	16	350M	600M	336.4	477	3	2 1/4	5 1/2	1/2	1/2
SCV75-90-T16-AA	3/4	16	500M	900M	477	795	3	2 1/4	5 1/2	1/2	1/2
SCV75-125-T16-AA	3/4	16	900M	1250M	715.5	1113	3 1/4	2 1/4	5 3/4	1/2	1/2
SCV78-25-T0-AA	25/32	0	1/0	250M	1/0	4/0	3	2 1/4	5 1/2	1/2	1/2
SCV100-25-T14-AA	1	14	1/0	250M	1/0	4/0	3	2 1/4	5 1/2	1/2	1/2
SCV100-40-T14-AA	1	14	250M	400M	4/0	397.5	3	2 1/4	5 1/2	1/2	1/2
SCV100-60-T14-AA	1	14	350M	600M	336.4	477	3	2 1/4	5 1/2	1/2	1/2
SCV100-90-T14-AA	1	14	500M	900M	477	795	3	2 1/4	5 1/2	1/2	1/2
SCV100-125-T14-AA	1	14	900M	1250M	715.5	1113	3 1/4	2 1/4	5 3/4	1/2	1/2
SCV112-25-T12-AA	1-1/8	12	1/0	250M	1/0	4/0	3	2 1/4	5 1/2	1/2	1/2
SCV112-40-T12-AA	1-1/8	12	250M	400M	4/0	397.5	3	2 1/4	5 1/2	1/2	1/2
SCV112-60-T12-AA	1-1/8	12	350M	600M	336.4	477	3	2 1/4	5 1/2	1/2	1/2
SCV112-90-T12-AA	1-1/8	12	500M	900M	477	795	3	2 1/4	5 1/2	1/2	1/2
SCV112-125-T12-AA	1-1/8	12	900M	1250M	715.5	1113	3 1/4	2 1/4	5 3/4	1/2	1/2
SCV112-160-T12-AA	1-1/8	12	1250M	1600M	1113	1431	4 3/8	2 1/4	6 7/8	1/2	5/8

© 2011, AFL, all rights reserved. PP-3-00450, Revision 0, 1.12.11
Specifications are subject to change without notice.

DOSSERT®

TYPE SCV-AA

Stud Connector to Cable

Ordering Information cont.

CATALOG NUMBER	STUD DIA.	THREADS PER INCH	CABLE RANGE		CABLE RANGE ACSR		DIMENSIONS IN INCHES			BOLT SIZE	
			MIN	MAX	MIN	MAX	B	C	L	STUD	CABLE
SCV125-40-T12-AA	1-1/8	12	250M	400M	4/0	397.5	3	2-1/4	5-1/2	1/2	1/2
SCV125-60-T12-AA	1-1/4	12	350M	600M	336.4	477	3	2-1/4	5-1/2	1/2	1/2
SCV125-90-T14-AA	1-1/4	12	500M	900M	477	795	3	2-1/4	5-1/2	1/2	1/2
SCV125-125-T14-AA	1-1/4	12	900M	1250M	715.5	1113	3-1/4	2-1/4	5-3/4	1/2	1/2
SCV150-25-T12-AA	1-1/4	12	1/0	250M	1/0	4/0	3	2-1/4	5-1/2	1/2	1/2
SCV150-40-T12-AA	1-1/2	12	250M	400M	4/0	397.5	3	2-1/4	5-1/2	1/2	1/2
SCV150-60-T12-AA	1-1/2	12	350M	600M	336.4	477	3	2-1/4	5-1/2	1/2	1/2
SCV150-90-T12-AA	1-1/2	12	500M	900M	477	795	3	2-1/4	5-1/2	1/2	1/2
SCV150-125-T12-AA	1-1/2	12	900M	1250M	715.5	1113	3-1/4	2-1/4	5-7/8	1/2	1/2
SCV150-160-T12-AA	1-1/2	12	1250M	1600M	1113	1431	4-3/8	2-1/4	7	1/2	1/2
SCV150-200-T12-AA	1-1/2	12	1500M	2000M	1272	1780	4-1/2	2-1/4	7-1/8	1/2	1/2
SCV150-250-T12-AA	1-1/2	12	2000M	2500M	1780	2300	4-1/2	2-1/4	7-1/8	1/2	1/2
SCV175-25-T12-AA	1-3/4	12	1/0	250M	1/0	4/0	3	2-3/4	6	1/2	1/2
SCV175-40-T12-AA	1-3/4	12	250M	400M	4/0	397.5	3	2-3/4	6	1/2	1/2
SCV175-60-T12-AA	1-3/4	12	350M	600M	336.4	477	3	2-3/4	6	1/2	1/2
SCV175-90-T12-AA	1-3/4	12	500M	900M	477	795	3	2-3/4	6	1/2	1/2
SCV175-125-T12-AA	1-3/4	12	900M	1250M	715	1113	3-1/4	2-3/4	6-1/4	1/2	1/2
SCV175-160-T12-AA	1-3/4	12	1250M	1600M	1113	1431	4-3/8	2-3/4	7-3/8	1/2	5/8
SCV175-200-T12-AA	1-3/4	12	1500M	2000M	1272	1780	4-1/2	2-3/4	7-1/2	1/2	5/8
SCV175-250-T12-AA	1-3/4	12	2000M	2500M	1780	2300	4-1/2	2-3/4	7-1/2	1/2	5/8
SCV200-25-T12-AA	2	12	1/0	250M	1/0	4/0	3	2-3/4	6	1/2	1/2
SCV200-40-T12-AA	2	12	250M	400M	4/0	397.5	3	2-3/4	6	1/2	1/2
SCV200-60-T12-AA	2	12	350M	600M	336.4	477	3	2-3/4	6	1/2	1/2
SCV200-90-T12-AA	2	12	500M	900M	477	795	3	2-3/4	6	1/2	1/2
SCV200-125-T12-AA	2	12	900M	1250M	715	1113	3-1/4	2-3/4	6-1/2	1/2	1/2
SCV200-160-T12-AA	2	12	1250M	1600M	1113	1431	4-3/8	2-3/4	7-3/8	1/2	5/8
SCV200-200-T12-AA	2	12	1500M	2000M	1272	1780	4-1/2	2-3/4	7-1/2	1/2	5/8
SCV200-250-T12-AA	2	12	2000M	2500M	1780	2300	4-1/2	2-3/4	7-1/2	1/2	5/8
SCV250-25-T12-AA	2-1/2	12	1/0	250M	1/0	4/0	3	3	6-1/4	1/2	1/2
SCV250-40-T12-AA	2-1/2	12	250M	400M	4/0	397.5	3	3	6-1/4	1/2	1/2
SCV250-60-T12-AA	2-1/2	12	350M	600M	336.4	477	3	3	6-1/4	1/2	1/2
SCV250-90-T12-AA	2-1/2	12	500M	900M	477	795	3	3	6-1/4	1/2	1/2
SCV250-125-T12-AA	2-1/2	12	900M	1250M	715	1113	3-1/4	3	6-1/2	1/2	1/2
SCV250-160-T12-AA	2-1/2	12	1250M	1600M	1113	1431	4-3/8	3	7-5/8	1/2	5/8
SCV250-200-T12-AA	2-1/2	12	1500M	2000M	1272	1780	4-1/2	3	7-3/4	1/2	5/8
SCV250-250-T12-AA	2-1/2	12	2000M	2500M	1780	2300	4-1/2	3	7-3/7	1/2	5/8
SCV300-60-T12-AA	3	12	350M	600M	336.4	477	3	3	6-1/4	1/2	1/2
SCV300-90-T12-AA	3	12	500M	900M	477	795	3	3	6-1/4	1/2	1/2
SCV300-125-T12-AA	3	12	900M	1250M	715	1113	3-1/4	3	6-1/2	1/2	1/2
SCV300-160-T12-AA	3	12	1250M	1600M	1113	1431	4-3/8	3-1/4	7-7/8	5/8	5/8
SCV300-200-T12-AA	3	12	1500M	2000M	1272	1780	4-1/2	3-1/4	8	5/8	5/8
SCV300-250-T12-AA	3	12	2000M	2500M	1780	2300	4-1/2	3-1/4	8	5/8	5/8

© 2011, AFL, all rights reserved. PP-3-00450, Revision 0, 1.12.11
Specifications are subject to change without notice.

230 kV Aluminum Bolted Stud Connectors

DOSSERT®

TYPE SCX-AA, S2CX-AA

Aluminum Stud Connector for Cable

SCX-AA connects one cable to one stud and S2CX-AA connects two cables on one stud.

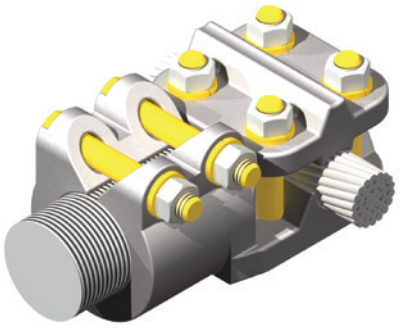

A variable conductor stud connector which takes a wide range of cable sizes in line or in a 90° position. The reversible cap permits optimum clamping for all cable sizes within the assigned ranges. In addition, one flat surface is machined to accommodate flat bar conductors. Can be furnished upon request in type SCX-N-AA with bolt holes to accommodate NEMA standard bar drilling.

Material

Aluminum Alloy

Hardware

Yellow anodized aluminum bolts, nuts and lockwashers.

Notes

1. For a 1" T14 stud, and two 1000 MCM cables order S2CX100-100-AA-T14

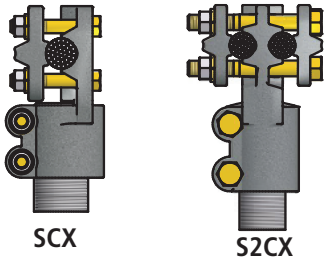

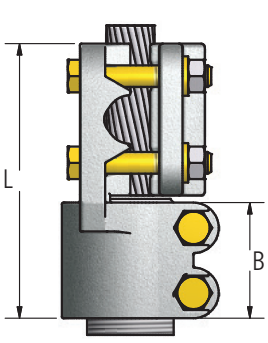

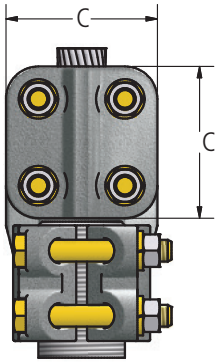

Ordering Information

CATALOG NUMBER		STUD DIA.	THREADS PER INCH	CABLE RANGE		SPS RANGE		DIMENSIONS IN INCHES			BOLT SIZE
SCX-AA	S2CX-AA			MIN	MAX	SMALL GROOVE	LARGE GROOVE	B	C	L	
SCX50-21-T13-AA	S2CX50-21-T13-AA	1/2	13	#6 SOL	4/0 STR	-	-	2	2	4 5/8	3/8
SCX75-21-T16-AA	S2CX75-21-T16-AA	3/4	16	#6 SOL	4/0 STR	-	-	2	2	4 5/8	3/8
SCX75-50-T16-AA	S2CX75-50-T16-AA	3/4	16	#6 SOL	500 MCM	3/8	1/2	2	2 1/4	4 7/8	3/8
SCX75-100-T16-AA	S2CX75-100-T16-AA	3/4	16	#2 SOL	1000 MCM	3/8	3/4	2	2 1/2	5 1/8	3/8
SCX100-21-T14-AA	S2CX100-21-T14-AA	1	14	#6 SOL	4/0 STR	-	-	2	2	4 3/8	3/8
SCX100-50-T14-AA	S2CX100-50-T14-AA	1	14	#6 SOL	500 MCM	3/8	1/2	2	2 1/4	4 7/8	3/8
SCX100-50-T0-AA	S2CX100-50-T0-AA	1	0	#6 SOL	500 MCM	3/8	1/2	2	2 1/4	4 7/8	3/8
SCX100-100-T14-AA	S2CX100-100-T14-AA	1	14	#2 SOL	1000 MCM	3/8	3/4	2 1/2	2 7/8	6 3/8	1/2
SCX112-21-T12-AA	S2CX112-21-T12-AA	1 1/8	12	#6 SOL	4/0 STR	-	-	2	2	4 5/8	3/8
SCX112-50-T12-AA	S2CX112-50-T12-AA	1 1/8	12	#6 SOL	500 MCM	3/8	1/2	2	2 1/4	4 7/8	3/8
SCX112-100-T12-AA	S2CX112-100-T12-AA	1 1/8	12	#2 SOL	1000 MCM	3/8	3/4	2 3/4	2 7/8	6 3/8	1/2
SCX125-100-T12-AA	S2CX125-100-T12-AA	1 1/4	12	#2 SOL	1000 MCM	3/8	3/4	2 3/4	2 7/8	6 3/8	1/2
SCX150-21-T12-AA	S2CX150-21-T12-AA	1 1/2	12	#6 SOL	500 MCM	-	-	2	2	4 5/8	3/8
SCX150-50-T12-AA	S2CX150-50-T12-AA	1 1/2	12	#6 SOL	500 MCM	3/8	1/2	2	2 1/4	4 7/8	3/8
SCX150-100-T12-AA	S2CX150-100-T12-AA	1 1/2	12	#2 SOL	1000 MCM	3/8	3/4	2 3/4	2 7/8	6 3/8	1/2
SCX150-200-T12-AA	S2CX150-200-T12-AA	1 1/2	12	4/0 STR	2000 MCM	3/8	1 1/4	2 3/4	3 3/8	6 3/4	1/2
SCX200-200-T12-AA	S2CX200-200-T12-AA	2	12	4/0 STR	2000 MCM	3/8	1 1/4	2 3/4	3 3/8	6 3/4	1/2

© 2011, AFL, all rights reserved. PP-3-00452, Revision 0, 1.12.11
Specifications are subject to change without notice.

230 kV Aluminum Bolted Stud Connectors

DOSSERT®

TYPE SP-AA

Stud Connector to Pipe

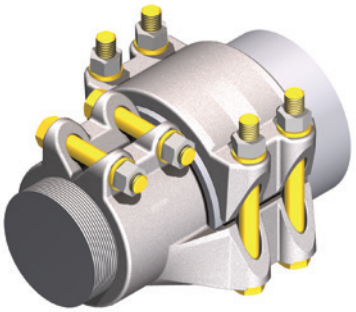

A connector for joining a tubular bus conductor to a threaded stud.

Material

Aluminum Alloy

Hardware

Yellow anodized aluminum nuts, bolts and lockwashers.

Notes

1. For tin plating add suffix "-SN" to end of catalog number.
2. For no threads use suffix "T0" in catalog number. Ex: SP100-75-T0-AA-SN.

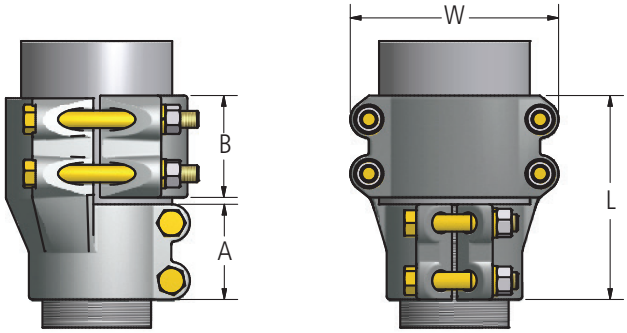

Ordering Information

CATALOG NUMBER	STUD DIAMETER	THREADS PER INCH	SPS	DIMENSIONS IN INCHES				BOLT SIZE	
				A	B	L	W	STUD	PIPE
SP125-150-T14-AA	1-1/4	14	1-1/2	2-3/4	3	6	3-5/8	1/2	1/2
SP100-75-T16-AA	1	16	3/4	2-3/4	2-3/4	5-3/4	2-13/16	1/2	1/2
SP150-300-T12-AA	1-1/2	12	3	2-3/4	3-1/2	6-1/2	5-5/8	1/2	1/2
SP112-75-T12-AA	1-1/8	12	3/4	2-3/4	2-3/4	5-3/4	2-13/16	1/2	1/2
SP112-100-T12-AA	1-1/8	12	1	2-3/4	2-3/4	5-3/4	3-1/16	1/2	1/2
SP112-125-T12-AA	1-1/8	12	1-1/4	2-3/4	3	6	3-7/16	1/2	1/2
SP112-150-T12-AA	1-1/8	12	1-1/2	2-3/4	3	6	3-5/8	1/2	1/2
SP118-250-T12-AA	1-3/6	12	2-1/2	2-3/4	3-1/4	6-1/4	4-1/8	1/2	1/2
SP150-100-T12-AA	1-1/2	12	1	2-3/4	2-3/4	5-3/4	3-1/16	1/2	1/2
SP150-125-T12-AA	1-1/2	12	1-1/4	2-3/4	3	6	3-7/16	1/2	1/2
SP150-150-T12-AA	1-1/2	12	1-1/2	2-3/4	3	6	3-5/8	1/2	1/2
SP150-200-T12-AA	1-1/2	12	2	2-3/4	3-1/4	6-1/4	4-1/8	1/2	1/2
SP150-250-T12-AA	1-1/2	12	2-1/2	2-3/4	3-1/4	6-1/4	4-1/8	1/2	1/2
SP200-100-T12-AA	2	12	1	2-3/4	2-3/4	5-3/4	3-1/16	1/2	1/2
SP200-125-T12-AA	2	12	1-1/4	2-3/4	3	6	3-7/16	1/2	1/2
SP200-150-T12-AA	2	12	1-1/2	2-3/4	3	6	3-5/8	1/2	1/2
SP200-200-T12-AA	2	12	2	2-3/4	3-1/4	6-1/4	4-1/8	1/2	1/2
SP200-250-T12-AA	2	12	2-1/2	2-3/4	3-1/4	6-1/4	4-1/8	1/2	1/2
SP200-350-T12-AA	2	12	3-1/2	2-3/4	3-3/4	6-3/4	6-1/8	1/2	5/8
SP400-500-T10-AA	4	10	5	3-1/2	3-3/4	7-1/2	7-3/4	5/8	5/8
SP400-600-T12-AA	4	12	6	4-1/8	8	12-1/2	8-3/4	5/8	5/8

© 2011, AFL, all rights reserved. PP-3-00461, Revision 1, 6.1.18
Specifications are subject to change without notice.

DOSSERT®

TYPE SX-AA, SX-90-AA

Stud Expansion Connector for Pipe

An expansion stud connector for joining a tubular bus to a threaded or unthreaded transformer stud. The movements of the conductors caused by thermal expansion and contraction or settling foundations are efficiently absorbed by the aluminum laminated straps. Type SX is furnished with an alignment guide for connections where axial alignment is required.

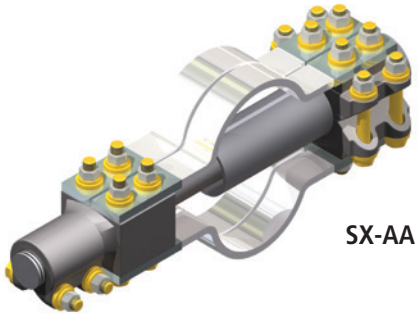

SX-AA

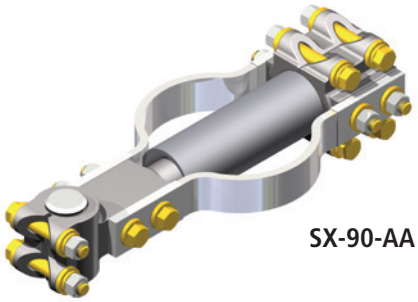

SX-90-AA

Material

Aluminum Alloy

Hardware

Aluminum bolts, nuts, and lockwashers.

Laminates

Pure aluminum

Notes

1. For a 90 degree stud connector, add -90 to the Catalog Number.
   Ex: SX100-100-T14-90-AA

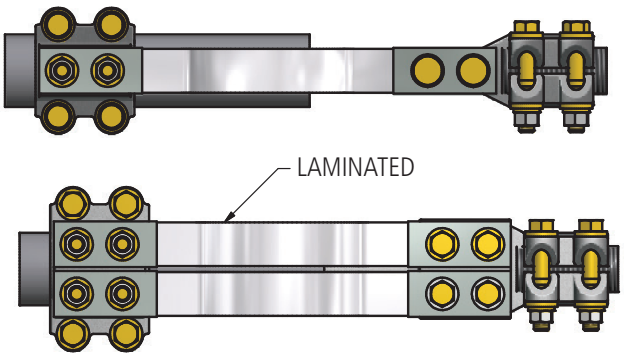

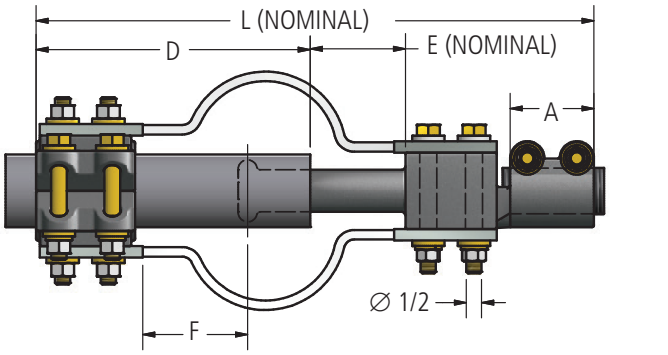

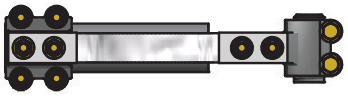

SX-90-AA

© 2011, AFL, all rights reserved. PP-3-00466, Revision 3, 4.2.18
Specifications are subject to change without notice.

DOSSERT®

TYPE SX-AA, SX-90-AA

Stud Expansion Connector for Pipe Type SX

Ordering Information

CATALOG NUMBER		SPS	STUD DIAMETER	THREADS PER INCH	DIMENSIONS IN INCHES					BOLT SIZE	
					A	D	E	F	L	STUD	SPS
SX75-75-T16-AA	SX75-75-T16-90-AA	3/4	3/4	16	2-1/4	6-5/8	1-1/2	3	13-5/8	1/2	1/2
SX75-100-T16-AA	SX75-100-T16-90-AA	1	3/4	16	2-1/4	6-3/4	1-1/2	3-1/2	13-3/4	1/2	1/2
SX100-75-T14-AA	SX100-75-T14-90-AA	3/4	1	14	2-1/4	6-5/8	1-1/2	3	13-5/8	1/2	1/2
SX100-100-T14-AA	SX100-100-T14-90-AA	1	1	14	2-1/4	6-3/4	1-1/2	3-1/2	13-3/4	1/2	1/2
SX100-125-T14-AA	SX100-125-T14-90-AA	1-1/4	1	14	2-1/4	7-5/8	1-1/2	3-1/2	14-5/8	1/2	1/2
SX100-150-T14-AA	SX100-150-T14-90-AA	1-1/2	1	14	2-1/4	7-5/8	1-1/2	3-1/2	14-5/8	1/2	1/2
SX100-200-T12-AA	SX100-200-T12-90-AA	2	1	12	2-11/32	10	2-1/2	4-1/2	16-3/4	1/2	1/2
SX112-75-T12-AA	SX112-75-T12-90-AA	3/4	1-1/8	12	2-1/4	6-5/8	1-1/2	3	13-5/8	1/2	1/2
SX112-100-T12-AA	SX112-100-T12-90-AA	1	1-1/8	12	2-1/4	6-3/4	1-1/2	3-1/2	13-3/4	1/2	1/2
SX112-125-T12-AA	SX112-125-T12-90-AA	1-1/4	1-1/8	12	2-1/4	7-5/8	1-1/2	3-1/2	14-5/8	1/2	1/2
SX112-150-T12-AA	SX112-150-T12-90-AA	1-1/2	1-1/8	12	2-1/4	7-5/8	1-1/2	3-1/2	14-5/8	1/2	1/2
SX112-250-T12-AA	SX112-250-T12-90-AA	2-1/2	1-1/8	12	2-1/2	8-3/4	2-1/2	4-1/2	16-5/8	1/2	1/2
SX125-75-T12-AA	SX125-75-T12-90-AA	3/4	1-1/4	12	2-3/4	6-5/8	1-1/2	3	14-1/8	1/2	1/2
SX125-100-T12-AA	SX125-100-T12-90-AA	1	1-1/4	12	2-3/4	6-3/4	1-1/2	3-1/2	14-1/4	1/2	1/2
SX125-125-T12-AA	SX125-125-T12-90-AA	1-1/4	1-1/4	12	2-3/4	7-5/8	1-1/2	3-1/2	15-1/8	1/2	1/2
SX125-150-T12-AA	SX125-150-T12-90-AA	1-1/2	1-1/4	12	2-3/4	7-5/8	1-1/2	3-1/2	15-1/8	1/2	1/2
SX150-75-T12-AA	SX150-75-T12-90-AA	3/4	1-1/2	12	2-3/4	6-5/8	1-1/2	3	14-1/8	1/2	1/2
SX150-100-T12-AA	SX150-100-T12-90-AA	1	1-1/2	12	2-3/4	6-3/4	1-1/2	3-1/2	14-1/4	1/2	1/2
SX150-125-T12-AA	SX150-125-T12-90-AA	1-1/4	1-1/2	12	2-3/4	7-5/8	1-1/2	3-1/2	15-1/8	1/2	1/2
SX150-150-T12-AA	SX150-150-T12-90-AA	1-1/2	1-1/2	12	2-3/4	7-5/8	1-1/2	3-1/2	15-1/8	1/2	1/2
SX150-200-T12-AA	SX150-200-T12-90-AA	2	1-1/2	12	2-3/4	8-1/4	2-1/2	4-1/2	16-3/4	1/2	1/2
SX150-450-T12-AA	SX150-450-T12-90-AA	4-1/2	1-1/2	12	2-3/4	11-3/4	3-3/4	3-5/8	22	1/2	5/8
SX175-75-T12-AA	SX175-75-T12-90-AA	3/4	1-3/4	12	2-3/4	6-5/8	1-1/2	3	14-1/8	1/2	1/2
SX175-100-T12-AA	SX175-100-T12-90-AA	1	1-3/4	12	2-3/4	6-3/4	1-1/2	3-1/2	14-1/4	1/2	1/2
SX175-125-T12-AA	SX175-125-T12-90-AA	1-1/4	1-3/4	12	2-3/4	7-5/8	1-1/2	3-1/2	15-1/8	1/2	1/2
SX175-150-T12-AA	SX175-150-T12-90-AA	1-1/2	1-3/4	12	2-3/4	7-5/8	1-1/2	3-1/2	15-1/8	1/2	1/2
SX175-200-T12-AA	SX175-200-T12-90-AA	2	1-3/4	12	2-3/4	8-1/4	2-1/2	4-1/2	16-3/4	1/2	1/2
SX200-100-T12-AA	SX200-100-T12-90-AA	1	2	12	2-3/4	6-3/4	1-1/2	3-1/2	14-1/4	1/2	1/2
SX200-125-T12-AA	SX200-125-T12-90-AA	1-1/4	2	12	2-3/4	7-5/8	1-1/2	3-1/2	15-1/8	1/2	1/2
SX200-150-T12-AA	SX200-150-T12-90-AA	1-1/2	2	12	2-3/4	7-5/8	1-1/2	3-1/2	15-1/8	1/2	1/2
SX200-200-T12-AA	SX200-200-T12-90-AA	2	2	12	2-3/4	8-1/4	2-1/2	4-1/2	16-3/4	1/2	1/2
SX200-250-T12-AA	SX200-250-T12-90-AA	2-1/2	2	12	2-3/4	8-3/4	2-1/2	4-1/2	17-1/4	1/2	1/2
SX200-250E-T12-AA	SX200-250E-T12-90-AA	2-1/2	2	12	2-3/4	8-3/4	2-1/2	4-1/2	17-1/4	1/2	1/2
SX225-350E-T12-AA	SX225-350E-T12-90-AA	3-1/2	2-1/4	12	2-3/4	9-1/4	2-1/2	4-1/2	15-1/2	1/2	5/8
SX250-250E-T12-AA	SX250-250E-T12-90-AA	2-1/2	2-1/2	12	2-3/4	9-1/4	2-1/2	4-1/2	15-1/2	1/2	5/8
SX300-200-T12-AA	SX300-200-T12-90-AA	2	3	12	3-1/4	8-1/4	2-1/2	4-1/2	17-1/4	5/8	1/2
SX300-250-T12-AA	SX300-250-T12-90-AA	2-1/2	3	12	3-1/4	8-3/4	2-1/2	4-1/2	17-3/4	5/8	1/2
SX300-300-T12-AA	SX300-300-T12-90-AA	3	3	12	3-1/4	10	2-1/2	4-1/2	19	5/8	5/8
SX300-350-T12-AA	SX300-350-T12-90-AA	3-1/2	3	12	3-1/4	11	2-1/2	4-1/2	20	5/8	5/8
SX300-400-T12-AA	SX300-400-T12-90-AA	4	3	12	3-1/4	11-1/2	2-1/2	4-1/2	20-1/2	5/8	5/8

© 2011, AFL, all rights reserved. PP-3-00466, Revision 3, 4.2.18
Specifications are subject to change without notice.

230 kV Aluminum Bolted Stud Connectors

DOSSERT®

TYPE SXLW-SI-AA

Aluminum To Bronze Angular Expansion Connector

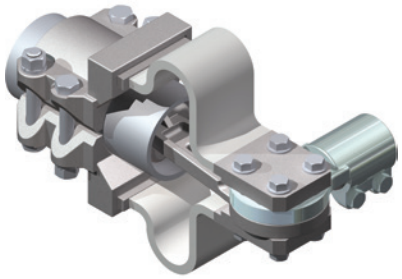

Expansion connector is designed for expansion and contraction in long bus runs. Stud connector can be adjusted to suit customers requirements. Laminated straps provide for 1.4" of expansion or contraction for pipe sizes 3/4" through 1 1/2" NPS. For pipe sizes 2" through 4", the straps allow for expansion or contraction of 2.6."

Material

Aluminum Alloy, Copper Alloy

Hardware

Stainless steel nuts, bolts and lockwashers.

Notes

1. For a custom thread count change the number after the "T" in the catalog number.
   Ex:WSXL200C-350-SI-T0-AA
   Additional sizes are available.

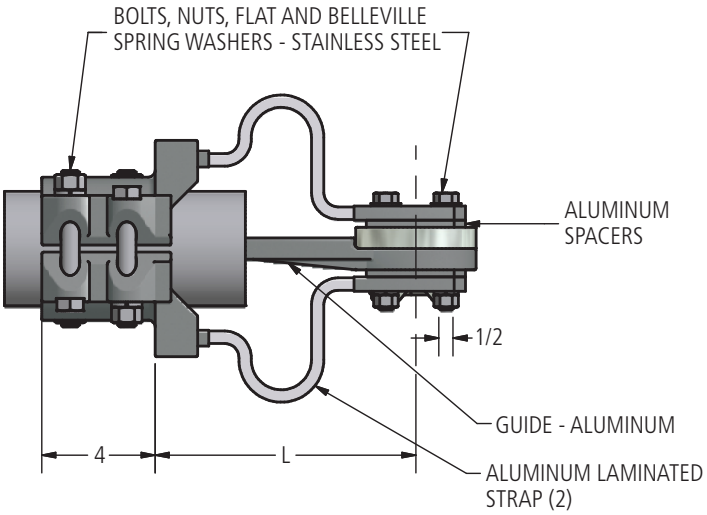

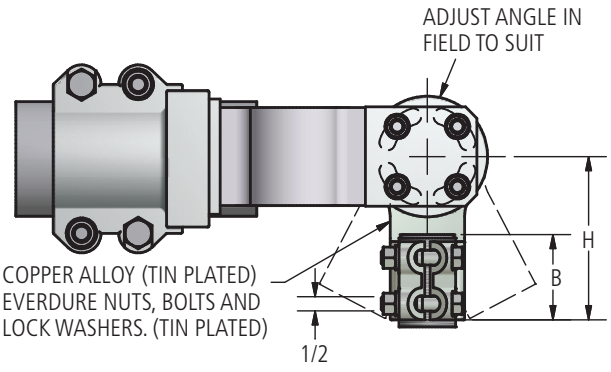

Ordering Information

CATALOG NUMBER	STUD DIAMETER	THREADS PER INCH	SPS		DIMENSIONS IN INCHES		
					B	H	L
SXLW200C-350-SI-T12-AA	2	12	2	SCH 40	2 3/4	5 3/4	7 3/4
SXLW200C-400E-SI-T12-AA	2	12	4	SCH 80	2 3/4	5 3/4	9 5/16
SXLW300C-400E-SI-T12-AA	3	12	4	SCH 80	3	6 5/8	9 5/16

© 2011, AFL, all rights reserved. PP-3-00467, Revision 0, 1.12.11
Specifications are subject to change without notice.

DOSSERT®

TYPE BAP-AA

Tee Connector



Tee connector is designed to make a tee connection in bus construction. Connector can be used on Schedule 40 and Schedule 80 pipe. Four clamp bolts on each conductor ensures positive electrical contact.

Material

Aluminum Alloy

Hardware

Yellow anodized aluminum bolts, nuts, and lockwashers.

Notes

Contact surfaces can be precoated by adding suffix -LP.

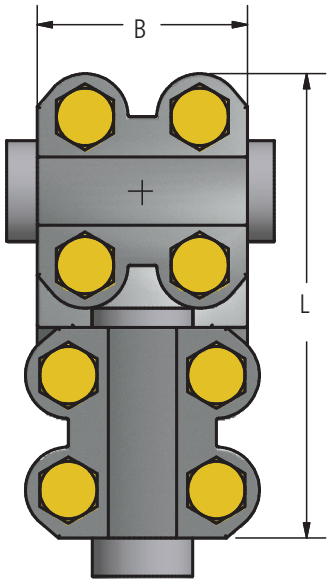

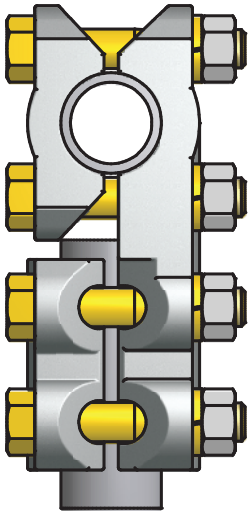

Ordering Information

CATALOG NUMBER	SPS		DIMENSIONS IN INCHES		BOLT SIZE
	MAIN	TAP	B	L	
BAP75-75-AA	3/4	3/4	2 3/4	5 13/16	1/2
BAP100-50-AA	1	1/2	2 3/4	6 1/16	1/2
BAP100-75-AA	1	3/4	2 3/4	6 1/16	1/2
BAP100-100-AA	1	1	2 3/4	6 1/16	1/2
BAP100-150-AA	1	1 1/2	2 3/4	6 5/16	1/2
BAP100-200-AA	1	2	2 3/4	6 9/16	1/2
BAP100-250-AA	1	2 1/2	2 3/4	6 9/16	1/2
BAP125-75-AA	1 1/4	3/4	3	6 13/32	1/2
BAP125-100-AA	1 1/4	1	3	6 13/32	1/2
BAP125-125-AA	1 1/4	1 1/4	3	6 21/32	1/2
BAP150-75-AA	1 1/2	3/4	3	6 21/32	1/2
BAP150-100-AA	1 1/2	1	3	6 21/32	1/2
BAP150-125-AA	1 1/2	1 1/4	3	6 29/32	1/2
BAP150-150-AA	1 1/2	1 1/2	3	6 29/32	1/2

© 2011, AFL, all rights reserved. PP-3-00239, Revision 1, 8.21.17
Specifications are subject to change without notice.

DOSSERT®

TYPE BAP-AA

Tee Connector

Ordering Information

CATALOG NUMBER	SPS		DIMENSIONS IN INCHES		BOLT SIZE
	MAIN	TAP	B	L	
BAP150-200-AA	1 1/2	2	3	7 5/32	1/2
BAP150-250-AA	1 1/2	2 1/2	3	7 5/32	1/2
BAP150-300-AA	1 1/2	3	3	7 3/8	1/2
BAP200-75-AA	2	3/4	3 1/4	7 1/8	1/2
BAP200-100-AA	2	1	3 1/4	7 1/8	1/2
BAP200-125-AA	2	1 1/4	3 1/4	7 3/8	1/2
BAP200-150-AA	2	1 1/2	3 1/4	7 3/8	1/2
BAP200-200-AA	2	2	3 1/4	7 5/8	1/2
BAP200-250-AA	2	2 1/2	3 1/4	7 5/8	1/2
BAP200-300-AA	2	3	3 1/4	7 7/8	1/2
BAP200-350-AA	2	3 1/2	3 1/4	8 1/4	1/2 and 5/8
BAP200-62R-S-AA	2	5/8R	3 1/4	6 1/2	1/2
BAP250-75-AA	2 1/2	3/4	3 1/4	7 5/8	1/2
BAP250-100-AA	2 1/2	1	3 1/4	7 5/8	1/2
BAP250-125-AA	2 1/2	1 1/4	3 1/4	7 7/8	1/2
BAP250-150-AA	2 1/2	1 1/2	3 1/4	7 7/8	1/2
BAP250-200-AA	2 1/2	2	3 1/4	8 1/8	1/2
BAP250-250-AA	2 1/2	2 1/2	3 1/4	8 1/8	1/2
BAP250-300-AA	2 1/2	3	3 1/4	8 3/8	1/2
BAP250-350-AA	2 1/2	3 1/2	3 1/4	8 1/4	1/2
BAP300-75-AA	3	3/4	3	8 1/4	1/2
BAP300-100-AA	3	1	3	8 1/2	1/2
BAP300-125-AA	3	1 1/4	3	8 1/2	1/2
BAP300-150-AA	3	1 1/2	3 1/2	8 3/4	1/2
BAP300-200-AA	3	2	3 1/2	8 3/4	1/2
BAP300-250-AA	3	2 1/2	3 1/2	8 3/4	1/2
BAP300-300-AA	3	3	3 3/4	8 3/4	5/8
BAP350-100-AA	3 1/2	1	3 1/2	8 3/4	1/2
BAP350-125-AA	3 1/2	1 1/4	3 1/2	9	1/2
BAP350-150-AA	3 1/2	1 1/2	3 1/2	9	1/2
BAP350-200-AA	3 1/2	2	3 1/2	9 1/4	1/2
BAP350-250-AA	3 1/2	2 1/2	3 1/2	9 1/4	5/8 and 1/2
BAP350-300-AA	3 1/2	3	3 3/4	10	5/8
BAP350-350-AA	3 1/2	3 1/2	3 3/4	10	5/8
BAP400-100-AA	4	1	3 1/4	9 1/4	1/2
BAP400-125-AA	4	1 1/4	3 1/4	9 1/2	1/2
BAP400-150-AA	4	1 1/2	3 1/4	9 1/2	1/2
BAP400-200-AA	4	2	3 1/4	9 3/4	1/2
BAP400-250-AA	4	2 1/2	3 1/4	9 3/4	1/2
BAP400-300-AA	4	3	3 3/4	10 1/2	5/8
BAP400-350-AA	4	3 1/2	3 3/4	10 1/2	5/8
BAP400-400-AA	4	4	3 3/4	10 5/8	5/8
BAP500-150-AA	5	1 1/2	3 3/4	10 15/16	5/8 and 1/2
BAP500-250-AA	5	2 1/2	3 3/4	10 15/32	1/2
BAP500-300-AA	5	3	3 3/4	11 3/4	5/8
BAP500-500-AA	5	5	7	15	5/8
BAP600-300-AA	6	3	3 3/4	12 3/4	5/8
BAP600-600-AA	6	6	8	17	5/8
BAP125-118R-AA	1 1/4	30MM	3	6 13/32	1/2
BAP-500-393R-AA	5	100MM	3 3/4	11 3/4	5/8

© 2011, AFL, all rights reserved. PP-3-00239, Revision 1, 8.21.17
Specifications are subject to change without notice.

DOSSERT®

TYPE BCV-AA

Cable to Cable Tee

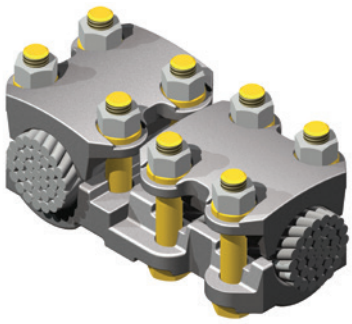

Tee connectors are designed for use with stranded aluminum or ACSR conductors. Tees are designed with universal grooves to accept a wide range of conductor sizes. Four clamp bolts on each conductor insures a positive electrical contact.

Material

Aluminum Alloy

Hardware

Yellow anodized aluminum nuts, bolts and lockwashers.

Notes

- For Stainless Steel bolts, lockwashers and Everdur nuts, add "-SSHBN" to catalog number. EX: BCV25-25-AA-SSHBN
- For Grade Five Galvanized Steel Hardware, add "-GS5" to catalog number. EX: BCV25-25-AA-GS5
- For Electro Tin Plate, add "-SN" to catalog number. EX: BCV25-25-AA-SN

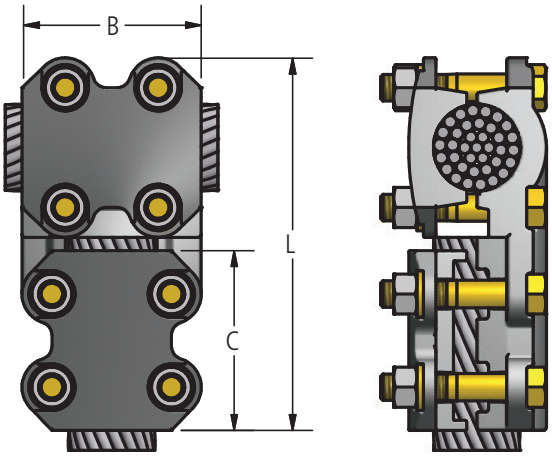

Ordering Information

CATALOG NUMBER	AAC RUN		ACSR RUN		AAC TAP		ACSR TAP		DIMENSIONS IN INCHES			BOLT SIZE	
	MIN	MAX	MIN	MAX	MIN	MAX	MIN	MAX	B	C	L	RUN	TAP
BCV10-10-AA	4	1/0	4	1/0	4	1/0	4	1/0	1-7/8	1-7/8	4-3/8	1/2	1/2
BCV25-25-AA	1/0	250	1/0	4/0	1/0	250	1/0	4/0	3	3	5-5/8	1/2	1/2
BCV40-25-AA	250	400	4/0	397.4	1/0	250	1/0	4/0	3	3	5-3/4	1/2	1/2
BCV40-40-AA	250	400	4/0	397.4	250	400	4/0	397.5	3	3	5-3/4	1/2	1/2
BCV40-60-AA	250	400	4/0	397.4	350	600	336.4	477	3	3	5-3/4	1/2	1/2
BCV40-90-AA	250	400	4/0	397.4	500	900	477	795	3	3	5-3/4	1/2	1/2
BCV60-25-AA	350	600	336.4	477	1/0	250	1/0	4/0	3	3	5-15/16	1/2	1/2
BCV60-40-AA	350	600	336.4	477	250	400	4/0	397.5	3	3	5-15/16	1/2	1/2
BCV60-60-AA	350	600	336.4	477	350	600	336.4	477	3	3	5-15/16	1/2	1/2
BCV60-90-AA	350	600	336.4	477	500	900	477	795	3	3	5-15/16	1/2	1/2
BCV90-25-AA	500	900	477	795	1/0	250	1/0	4/0	3	3	6-1/8	1/2	1/2
BCV90-30-AA	500	900	477	795	1/0	300	1/0	266.8	3	3	6-1/8	1/2	1/2
BCV90-40-AA	500	900	477	795	250	400	4/0	397.5	3	3	6-1/8	1/2	1/2
BCV90-60-AA	500	900	477	795	350	600	336	477	3	3	6-1/8	1/2	1/2

© 2011, AFL, all rights reserved. PP-3-00243, Revision 3, 10.9.19
Specifications are subject to change without notice.

DOSSERT®

TYPE BCV-AA

Cable to Cable Tee

Ordering Information

CATALOG NUMBER	AAC RUN		ACSR RUN		AAC TAP		ACSR TAP		DIMENSIONS IN INCHES			BOLT SIZE	
	MIN	MAX	MIN	MAX	MIN	MAX	MIN	MAX	B	C	L	RUN	TAP
BCV90-90-AA	500	900	477	795	500	900	477	795	3	3	6-1/8	1/2	1/2
BCV90-125-AA	500	900	477	795	900	1250	715	1113	3	3-1/4	6-3/8	1/2	1/2
BCV125-25-AA	900	1250	715	1113	1/0	250	1/0	4/0	3-1/4	3	6-5/16	1/2	1/2
BCV125-40-AA	900	1250	715	1113	250	400	4/0	397.5	3-1/4	3	6-5/16	1/2	1/2
BCV125-60-AA	900	1250	715	1113	350	600	336.4	477	3-1/4	3	6-5/16	1/2	1/2
BCV125-90-AA	900	1250	715	1113	500	900	477	795	3-1/4	3	6-5/16	1/2	1/2
BCV125-125-AA	900	1250	715	1113	900	1250	715	1113	3-1/4	3-1/4	6-9/16	1/2	1/2
BCV125-160-AA	900	1250	715	1113	1250	1600	1113	1431	4-3/8	4-3/8	7-11/16	1/2	5/8
BCV160-25-AA	1250	1600	1113	1431	1/0	250	1/0	4/0	4-3/8	3	6-7/8	5/8	1/2
BCV160-40-AA	1250	1600	1113	1431	250	400	4/0	397.5	4-3/8	3	6-7/8	5/8	1/2
BCV160-60-AA	1250	1600	1113	1431	350	600	336.4	477	4-3/8	3	6-7/8	5/8	1/2
BCV160-60S-AA	1250	1600	1113	1431	4/0	600	3/0	477	4-3/8	3	6-7/8	5/8	1/2
BCV160-90-AA	1250	1600	1113	1431	500	900	477	795	4-3/8	3	6-7/8	5/8	1/2
BCV160-125-AA	1250	1600	1113	1431	900	1250	715	1113	4-3/8	3-1/4	7-1/8	5/8	1/2
BCV160-160-AA	1250	1600	1113	1431	1250	1600	1113	1431	4-3/8	4-3/8	8-1/4	5/8	5/8
BCV160-200-AA	1250	1600	1113	1431	1500	2000	1272	1780	4-3/8	4-1/2	8-3/8	5/8	5/8
BCV200-25-AA	1500	2000	1272	1780	1/0	250	1/0	4/0	4-1/2	3	7-1/8	5/8	1/2
BCV200-40-AA	1500	2000	1272	1780	250	400	4/0	397.5	4-1/2	3	7-1/8	5/8	1/2
BCV200-60-AA	1500	2000	1272	1780	350	600	336.4	477	4-1/2	3	7-1/8	5/8	1/2
BCV200-90-AA	1500	2000	1272	1780	500	900	477	795	4-1/2	3	7-1/8	5/8	1/2
BCV200-125-AA	1500	2000	1272	1780	900	1250	715	1113	4-1/2	3-1/4	7-3/8	5/8	1/2
BCV200-160-AA	1500	2000	1272	1780	1250	1600	1113	1431	4-1/2	4-3/8	8-1/2	5/8	5/8
BCV200-200-AA	1500	2000	1272	1780	1500	2000	1272	1780	4-1/2	4-1/2	8-5/8	5/8	5/8
BCV200-250-AA	1500	2000	1272	1780	2000	2500	1780	2300	4-1/2	4-1/2	8-5/8	5/8	5/8
BCV250-25-AA	2000	2500	1780	2300	1/0	250	1/0	4/0	4-1/2	3	7-1/4	5/8	1/2
BCV250-40-AA	2000	2500	1780	2300	250	400	4/0	397.5	4-1/2	3	7-1/4	5/8	1/2
BCV250-60-AA	2000	2500	1780	2300	350	600	336.4	477	4-1/2	3	7-1/4	5/8	1/2
BCV250-90-AA	2000	2500	1780	2300	500	900	477	795	4-1/2	3	7-1/4	5/8	1/2
BCV250-125-AA	2000	2500	1780	2300	900	1250	715	1113	4-1/2	3-1/4	7-1/2	5/8	1/2
BCV250-160-AA	2000	2500	1780	2300	1250	1600	1113	1431	4-1/2	4-3/8	8-5/8	5/8	5/8
BCV250-200-AA	2000	2500	1780	2300	1500	2000	1272	1780	4-1/2	4-1/2	8-3/4	5/8	5/8
BCV250-250-AA	2000	2500	1780	2300	2000	2500	1780	2300	4-1/2	4-1/2	8-3/4	5/8	5/8
BCV250-300-AA	2000	2500	1780	2300	2500	3000	1780	2870	4-1/2	4-1/2	8-3/4	5/8	5/8
BCV250-350-AA	2000	2500	1780	2300	3000	3500	-	-	4 1/2	4 1/2	8 3/4	5/8	5/8
BCV300-25-AA	2500	3000	2312	2870	1/0	250	1/0	4/0	4-1/2	3	7-3/8	5/8	1/2
BCV300-40-AA	2500	3000	2312	2870	250	400	4/0	397.5	4-1/2	3	7-3/8	5/8	1/2
BCV300-60-AA	2500	3000	2312	2870	350	600	366.4	477	4-1/2	3	7-3/8	5/8	1/2
BCV300-90-AA	2500	3000	2312	2870	500	900	477	795	4-1/2	3	7-3/8	5/8	1/2
BCV300-125-AA	2500	3000	2312	2870	900	1250	715	1113	4-1/2	3-1/4	7-3/8	5/8	1/2
BCV300-160-AA	2500	3000	2312	2870	1250	1600	1113	1431	4-1/2	4-3/8	9	5/8	5/8
BCV300-200-AA	2500	3000	2312	2870	1500	2000	1272	1780	4-1/2	4-1/2	9-1/8	5/8	5/8
BCV300-250-AA	2500	3000	2312	2870	2000	2500	1780	2300	4-1/2	4-1/2	8-13/16	5/8	5/8
BCV300-300-AA	2500	3000	2312	2870	2500	3000	2312	2870	4-1/2	4-1/2	8-13/16	5/8	5/8
BCV350-40-AA	3000	3500	-	-	250	400	4/0	397.4	4 1/2	3	8 13/16	5/8	1/2
BCV350-125-AA	3000	3500	-	-	250	400	4/0	397.4	4 1/2	3 1/4	8 13/16	5/8	1/2
BCV350-200-AA	3000	3500	-	-	1500	2000	1780	2300	4 1/2	4 1/2	8 13/16	5/8	5/8
BCV350-350-AA	3000	3500	-	-	3000	2500	-	-	4 1/2	4 1/2	8 13/16	5/8	5/8

© 2011, AFL, all rights reserved. PP-3-00243, Revision 3, 10.9.19
Specifications are subject to change without notice.

DOSSERT®

TYPE BP-AA, BPA-75-AA, BPA-80-AA

Standard, 75 Degree and 80 Degree Tee Connector

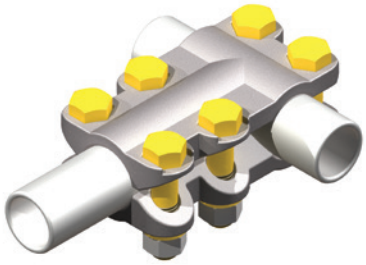

An aluminum tee connector designed for maximum efficiency and reliability. Connector can be used with Schedule 40 and Schedule 80 pipe.

Material

Aluminum Alloy

Hardware

Yellow anodized aluminum bolts, nuts, and lockwashers.

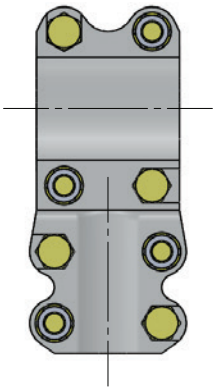

BP-AA

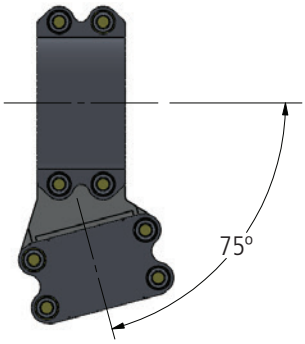

BPA-75-AA

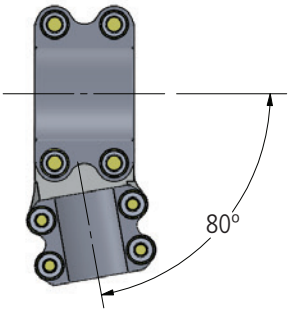

BPA-80-AA

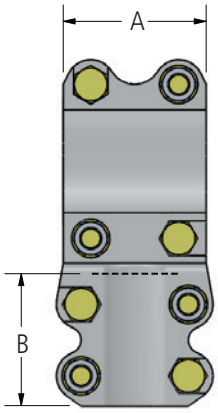

BP-AA

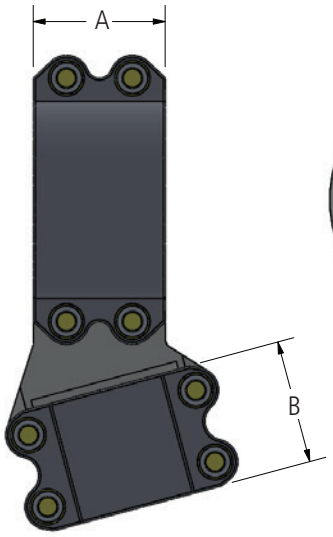

BPA-AA

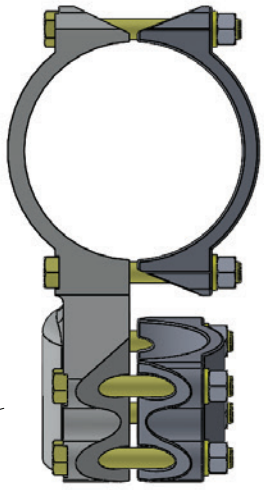

© 2011, AFL, all rights reserved. PP-3-00252, Revision 3, 12.18.18
Specifications are subject to change without notice.

DOSSERT®

TYPE BP-AA, BPA-75-AA, BPA-80-AA

Standard, 75 Degree, and 80 Degree Tee Connector

Ordering Information

CATALOG NUMBER			SPS		DIMENSIONS IN INCHES		BOLT SIZE
STANDARD	75 DEGREES	80 DEGREES	RUN	TAP	A	B	
BP100-75-AA	BPA100-75-75-AA	BPA100-75-80-AA	1	3/4	2-3/4	2-3/4	1/2
BP100-100-AA	BPA100-100-75-AA	BPA100-100-80-AA	1	1	2-3/4	2-3/4	1/2
BP125-75-AA	BPA125-75-75-AA	BPA125-75-80-AA	1-1/4	3/4	3	2-3/4	1/2
BP125-100-AA	BPA125-100-75-AA	BPA125-100-80-AA	1-1/4	1	3	2-3/4	1/2
BP125-125-AA	BPA125-125-75-AA	BPA125-125-80-AA	1-1/4	1-1/4	3	3	1/2
BP150-100-AA	BPA150-100-75-AA	BPA150-100-80-AA	1-1/2	1	3	2-3/4	1/2
BP150-125-AA	BPA150-125-75-AA	BPA150-125-80-AA	1-1/2	1-1/4	3	3	1/2
BP150-150-AA	BPA150-150-75-AA	BPA150-150-80-AA	1-1/2	1-1/2	3	3	1/2
BP200-100-AA	BPA200-100-75-AA	BPA200-100-80-AA	2	1	3-1/4	2-3/4	1/2
BP200-125-AA	BPA200-125-75-AA	BPA200-125-80-AA	2	1-1/4	3-1/4	3	1/2
BP200-150-AA	BPA200-150-75-AA	BPA200-150-80-AA	2	1-1/2	3-1/4	3	1/2
BP200-200-AA	BPA200-200-75-AA	BPA200-200-80-AA	2	2	3-1/4	3-1/4	1/2
BP200-250-AA	BPA200-250-75-AA	BPA200-250-80-AA	2	2-1/2	3-1/4	3-1/4	1/2
BP250-75-AA	BPA250-75-75-AA	BPA250-75-80-AA	2-1/2	3/4	3-1/4	2-3/4	1/2
BP250-100-AA	BPA250-100-75-AA	BPA250-100-80-AA	2-1/2	1	3-1/4	2-3/4	1/2
BP250-125-AA	BPA250-125-75-AA	BPA250-125-80-AA	2-1/2	1-1/4	3-1/4	3	1/2
BP250-150-AA	BPA250-150-75-AA	BPA250-150-80-AA	2-1/2	1-1/2	3-1/4	3	1/2
BP250-200-AA	BPA250-200-75-AA	BPA250-200-80-AA	2-1/2	2	3-1/4	3-1/4	1/2
BP250-250-AA	BPA250-250-75-AA	BPA250-250-80-AA	2-1/2	2-1/2	3-1/4	3-1/4	1/2
BP300-100-AA	BPA300-100-75-AA	BPA300-100-80-AA	3	1	3-1/4	2-3/4	1/2
BP300-125-AA	BPA300-125-75-AA	BPA300-125-80-AA	3	1-1/4	3-1/4	3	1/2
BP300-150-AA	BPA300-150-75-AA	BPA300-150-80-AA	3	1-1/2	3-1/4	3	1/2
BP300-200-AA	BPA300-200-75-AA	BPA300-200-80-AA	3	2	3-1/4	3-1/4	1/2
BP300-250-AA	BPA300-250-75-AA	BPA300-250-80-AA	3	2-1/2	3-1/4	3-1/4	1/2
BP300-300-AA	BPA300-300-75-AA	BPA300-300-80-AA	3	3	3-3/4	3-3/4	5/8
BP350-100-AA	BPA350-100-75-AA	BPA350-100-80-AA	3-1/2	1	3-1/4	2-3/4	1/2
BP350-125-AA	BPA350-125-75-AA	BPA350-125-80-AA	3-1/2	1-1/4	3-1/4	3	1/2
BP350-150-AA	BPA350-150-75-AA	BPA350-150-80-AA	3-1/2	1-1/2	3-1/4	3	1/2
BP350-200-AA	BPA350-200-75-AA	BPA350-200-80-AA	3-1/2	2	3-1/4	3-1/4	1/2
BP350-250-AA	BPA350-250-75-AA	BPA350-250-80-AA	3-1/2	2-1/2	3-1/4	3-1/4	1/2
BP350-300-AA	BPA350-300-75-AA	BPA350-300-80-AA	3-1/2	3	3-3/4	3-3/4	5/8
BP350-350-AA	BPA350-350-75-AA	BPA350-350-80-AA	3-1/2	3-1/2	3-3/4	3-3/4	5/8
BP400-125-AA	BPA400-125-75-AA	BPA400-125-80-AA	4	1-1/4	3-1/4	3	1/2
BP400-150-AA	BPA400-150-75-AA	BPA400-150-80-AA	4	1-1/2	3-1/4	3	1/2
BP400-200-AA	BPA400-200-75-AA	BPA400-200-80-AA	4	2	3-1/4	3-1/4	1/2
BP400-250-AA	BPA400-250-75-AA	BPA400-250-80-AA	4	2-1/2	3-1/4	3-1/4	1/2
BP400-300-AA	BPA400-300-75-AA	BPA400-300-80-AA	4	3	3-3/4	3-3/4	5/8
BP400-350-AA	BPA400-350-75-AA	BPA400-350-80-AA	4	3-1/2	3-3/4	3-3/4	5/8
BP400-400-AA	BPA400-400-75-AA	BPA400-400-80-AA	4	4	3-3/4	3-3/4	5/8
BP500-150-AA	BPA500-150-75-AA	BPA500-150-80-AA	5	1-1/2	3-1/2	3	1/2
BP500-200-AA	BPA500-200-75-AA	BPA500-200-80-AA	5	2	3-1/2	3-1/4	1/2
BP500-250-AA	BPA500-250-75-AA	BPA500-250-80-AA	5	2-1/2	3-1/2	3-1/4	1/2
BP500-300-AA	BPA500-300-75-AA	BPA500-300-80-AA	5	3	3-3/4	3-3/4	5/8
BP500-350-AA	BPA500-350-75-AA	BPA500-350-80-AA	5	3-1/2	4	3-3/4	5/8
BP500-400-AA	BPA500-400-75-AA	BPA500-400-80-AA	5	4	4	3-3/4	5/8
BP500-500-AA	BPA500-500-75-AA	BPA500-500-80-AA	5	5	4	4	5/8
BP600-250-AA	BPA600-250-75-AA	BPA600-250-80-AA	6	2-1/2	3-1/2	3-1/4	1/2
BP600-300-AA	BPA600-300-75-AA	BPA600-300-80-AA	6	3	4	3-3/4	5/8
BP600-350-AA	BPA600-350-75-AA	BPA600-350-80-AA	6	3-1/2	4	3-3/4	5/8
BP600-400-AA	BPA600-400-75-AA	BPA600-400-80-AA	6	4	4	3-3/4	5/8
BP600-500-AA	BPA600-500-75-AA	BPA600-500-80-AA	6	5	4	4	5/8
BP600-600-AA	BPA600-600-75-AA	BPA600-600-80-AA	6	6	4	4	5/8

© 2011, AFL, all rights reserved. PP-3-00252, Revision 3, 12.18.18
Specifications are subject to change without notice.

230 kV Aluminum Bolted Tee & Vee Connectors

DOSSERT®

TYPE BPCV-AA, BP2CV-AA

Aluminum Tee Connector For Tubular Bus To A Cable Tap

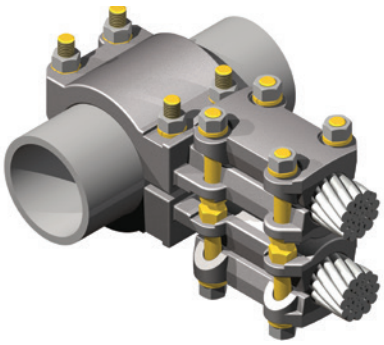

A variable tap pipe to cable tee connector. Cable clamping section is provided with two independently acting aluminum alloy saddles.

Material

Aluminum Alloy

Hardware

Yellow anodized aluminum bolts, nuts, and lockwashers.

Notes

1. For tin plating, add "-SN" to end of catalog number. EX: BP2CV300-125-AA-SN
2. For galvanized steel hardware, add "-GS" to end of catalog number. EX: BP2CV300-125-AA-GS
3. For grade five galvanized steel hardware, add "-GS5" to end of catalog number. EX: BPCV75-125-AA-GS5
4. For two cables in-line, add "-90V" to catalog number. EX: BP2CV400-200-90V-AA

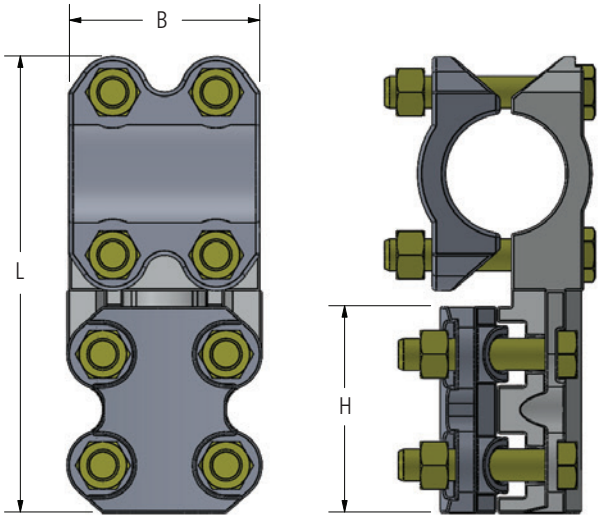

BPCV-AA

FIG. 1

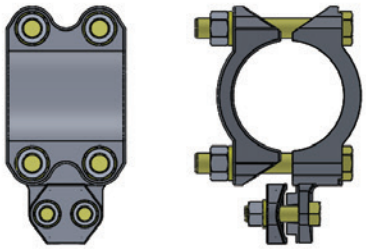

FIG. 2

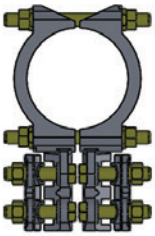

BP2CV-AA

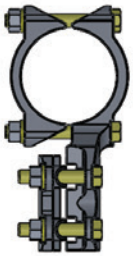

BP2CV-90V-AA

© 2011, AFL, all rights reserved. PP-3-00254, Revision 3, 11.8.2022
Specifications are subject to change without notice.

DOSSERT®

TYPE BPCV-AA, BP2CV-AA

Aluminum Tee Connector For Tubular Bus To A Cable Tap

Ordering Information

CATALOG NUMBER		FIG. NO.	SPS	CABLE TAP				DIMENSIONS IN INCHES		
				ALUMINUM		ACSR				
BPCV	BP2CV			MIN	MAX	MIN	MAX	B	L	H
BPCV50-25-AA	BP2CV50-25-AA	1	1/2	#1/0	250 MCM	#1/0	#4/0	2.75	6.13	3.00
BPCV50-50-AA	BP2CV50-50-AA	1	1/2	1/0 STR	250 MCM	#1/0	#4/0	2.75	6.13	3.00
BPCV75-25-AA	BP2CV75-25-AA	1	3/4	#1/0	250 MCM	#1/0	#4/0	2.75	6.13	3.00
BPCV75-40-AA	BP2CV75-40-AA	1	3/4	250 MCM	400 MCM	#4/0	397.5	2.75	6.13	3.00
BPCV75-60-AA	BP2CV75-60-AA	1	3/4	350 MCM	600 MCM	336.4	477	2.75	6.13	3.00
BPCV75-90-AA	BP2CV75-90-AA	1	3/4	500 MCM	900 MCM	477	795	2.75	6.13	3.00
BPCV75-125-AA	BP2CV75-125-AA	1	3/4	900 MCM	1250 MCM	715	1113	2.75	6.38	3.25
BPCV75-160-AA	BP2CV75-160-AA	1	3/4	1250 MCM	1600 MCM	1113	1431	2.75	7.50	4.38
BPCV75-200-AA	BP2CV75-200-AA	1	3/4	1500 MCM	2000 MCM	1272	1780	2.75	7.63	4.50
BPCV100-25-AA	BP2CV100-25-AA	1	1	1/0 STR	250 MCM	#1/0	#4/0	2.75	6.38	3.00
BPCV100-40-AA	BP2CV100-40-AA	1	1	250 MCM	400 MCM	#4/0	397.5	2.75	6.38	3.00
BPCV100-60-AA	BP2CV100-60-AA	1	1	350 MCM	600 MCM	336.4	477	2.75	6.38	3.00
BPCV100-90-AA	BP2CV100-90-AA	1	1	500 MCM	900 MCM	477	795	2.75	6.38	3.00
BPCV100-125-AA	BP2CV100-125-AA	1	1	900 MCM	1250 MCM	715	1113	2.75	6.63	3.25
BPCV100-160-AA	BP2CV100-160-AA	1	1	1250 MCM	1600 MCM	1113	1431	2.75	7.75	4.38
BPCV100-200-AA	BP2CV100-200-AA	1	1	1500 MCM	2000 MCM	1272	1780	2.75	7.88	4.50
BPCV125-10-AA	BP2CV125-10-AA	2	1 1/4	4	#1/0	4	#1/0	3.00	5.50	1.88
BPCV125-25-AA	BP2CV125-25-AA	1	1 1/4	1/0 STR	250 MCM	#1/0	#4/0	3.00	6.88	3.00
BPCV125-40-AA	BP2CV125-40-AA	1	1 1/4	250 MCM	400 MCM	#4/0	397.5	3.00	6.88	3.00
BPCV125-60-AA	BP2CV125-60-AA	1	1 1/4	350 MCM	600 MCM	336.4	477	3.00	6.88	3.00
BPCV125-90-AA	BP2CV125-90-AA	1	1 1/4	500 MCM	900 MCM	477	795	3.00	6.88	3.00
BPCV125-125-AA	BP2CV125-125-AA	1	1 1/4	900 MCM	1250 MCM	715	1113	3.00	7.13	3.25
BPCV125-160-AA	BP2CV125-160-AA	1	1 1/4	1250 MCM	1600 MCM	1113	1431	3.00	8.25	4.38
BPCV125-200-AA	BP2CV125-200-AA	1	1 1/4	1500 MCM	2000 MCM	1272	1780	3.00	8.38	4.50
BPCV150-25-AA	BP2CV150-25-AA	1	1 1/2	1/0 STR	250 MCM	#1/0	#4/0	3.00	6.88	3.00
BPCV150-40-AA	BP2CV150-40-AA	1	1 1/2	250 MCM	400 MCM	#4/0	397.5	3.00	6.88	3.00
BPCV150-60-AA	BP2CV150-60-AA	1	1 1/2	350 MCM	600 MCM	336.4	477	3.00	6.88	3.00
BPCV150-90-AA	BP2CV150-90-AA	1	1 1/2	500 MCM	900 MCM	477	795	3.00	6.88	3.00
BPCV150-125-AA	BP2CV150-125-AA	1	1 1/2	900 MCM	1250 MCM	715	1113	3.00	7.13	3.25
BPCV150-160-AA	BP2CV150-160-AA	1	1 1/2	1250 MCM	1600 MCM	1113	1431	3.00	8.25	4.38
BPCV150-200-AA	BP2CV150-200-AA	1	1 1/2	1500 MCM	2000 MCM	1272	1780	3.00	8.38	4.50
BPCV200-10-AA	BP2CV200-10-AA	2	2	4	#1/0	4	#1/0	3.25	6.25	1.88
BPCV200-25-AA	BP2CV200-25-AA	1	2	1/0 STR	250 MCM	#1/0	#4/0	3.25	7.75	3.00
BPCV200-40-AA	BP2CV200-40-AA	1	2	250 MCM	400 MCM	#4/0	397.5	3.25	7.75	3.00
BPCV200-60-AA	BP2CV200-60-AA	1	2	350 MCM	600 MCM	336.4	477	3.25	7.75	3.00
BPCV200-60-S-AA	BP2CV200-60-S-AA	1	2	#4/0	600 MCM	#3/0	477	3.25	7.75	3.00
BPCV200-90-AA	BP2CV200-90-AA	1	2	500 MCM	900 MCM	477	795	3.25	7.75	3.00
BPCV200-125-AA	BP2CV200-125-AA	1	2	900 MCM	1250 MCM	715	1113	3.25	8.00	3.25
BPCV200-160-AA	BP2CV200-160-AA	1	2	1250 MCM	1600 MCM	1113	1431	3.25	9.13	4.38
BPCV200-200-AA	BP2CV200-200-AA	1	2	1500 MCM	2000 MCM	1272	1780	3.25	9.25	4.50
BPCV200-250-AA	BP2CV200-250-AA	1	2	2000 MCM	2500 MCM	1780	2300	3.25	9.25	4.50
BPCV250-25-AA	BP2CV250-25-AA	1	2 1/2	1/0 STR	250 MCM	#1/0	#4/0	3.25	7.88	3.00
BPCV250-40-AA	BP2CV250-40-AA	1	2 1/2	250 MCM	400 MCM	#4/0	397	3.25	7.88	3.00
BPCV250-60-AA	BP2CV250-60-AA	1	2 1/2	350 MCM	600 MCM	336.4	477	3.25	7.88	3.00
BPCV250-90-AA	BP2CV250-90-AA	1	2 1/2	500 MCM	900 MCM	477	795	3.25	8.13	3.00
BPCV250-125-AA	BP2CV250-125-AA	1	2 1/2	900 MCM	1250 MCM	715	1113	3.25	8.38	3.25
BPCV250-160-AA	BP2CV250-160-AA	1	2 1/2	1250 MCM	1600 MCM	1113	1431	3.25	8.50	4.38
BPCV250-200-AA	BP2CV250-200-AA	1	2 1/2	1500 MCM	2000 MCM	1272	1780	3.25	8.63	4.50
BPCV250-250-AA	BP2CV250-250-AA	1	2 1/2	2000 MCM	2500 MCM	1780	2300	3.25	8.63	4.50
BPCV300-10-AA	BP2CV300-10-AA	2	3	4 STR	#1/0	4	#1/0	3.75	7.47	1.88
BPCV300-25-AA	BP2CV300-25-AA	1	3	1/0 STR	250 MCM	#1/0	#4/0	3.00	8.88	3.00
BPCV300-40-AA	BP2CV300-40-AA	1	3	250 MCM	400 MCM	#4/0	397.5	3.00	8.88	3.00
BPCV300-60-AA	BP2CV300-60-AA	1	3	350 MCM	600 MCM	336.4	477	3.00	8.88	3.00
BPCV300-90-AA	BP2CV300-90-AA	1	3	500 MCM	900 MCM	477	795	3.50	8.88	3.00
BPCV300-125-AA	BP2CV300-125-AA	1	3	900 MCM	1250 MCM	715	1113	3.50	8.88	3.25
BPCV300-160-AA	BP2CV300-160-AA	1	3	1250 MCM	1600 MCM	1113	1431	3.75	10.00	4.38

© 2011, AFL, all rights reserved. PP-3-00274, 3, 11.8.2022
Specifications are subject to change without notice.

DOSSERT®

TYPE BPCV-AA, BP2CV-AA

Aluminum Tee Connector For Tubular Bus To A Cable Tap

Ordering Information

CATALOG NUMBER		FIG. NO.	SPS	CABLE TAP				DIMENSIONS IN INCHES		
				ALUMINUM		ACSR				
BPCV	BP2CV			MIN	MAX	MIN	MAX	B	L	H
BPCV300-200-AA	BP2CV300-200-AA	1	3	1500 MCM	2000 MCM	1272	1780	3.75	10.13	4.50
BPCV300-250-AA	BP2CV300-250-AA	1	3	2000 MCM	2500 MCM	1780	2300	3.75	10.13	4.50
BPCV350-25-AA	BP2CV350-25-AA	1	3 1/2	1/0 STR	250 MCM	#1/0	#4/0	3.00	9.38	3.00
BPCV350-40-AA	BP2CV350-40-AA	1	3 1/2	250 MCM	400 MCM	#4/0	397.5	3.00	8.88	3.00
BPCV350-60-AA	BP2CV350-60-AA	1	3 1/2	350 MCM	600 MCM	336.4	477	3.00	8.88	3.00
BPCV350-90-AA	BP2CV350-90-AA	1	3 1/2	500 MCM	900 MCM	477	795	3.00	8.88	3.00
BPCV350-125-AA	BP2CV350-125-AA	1	3 1/2	900 MCM	1250 MCM	715	1113	3.50	9.81	3.25
BPCV350-160-AA	BP2CV350-160-AA	1	3 1/2	1250 MCM	1600 MCM	1113	1431	3.75	11.00	4.38
BPCV350-200-AA	BP2CV350-200-AA	1	3 1/2	1500 MCM	2000 MCM	1272	1780	3.75	11.19	4.50
BPCV400-25-AA	BP2CV400-25-AA	1	4	1/0 STR	250 MCM	#1/0	#4/0	3.25	10.00	3.00
BPCV400-40-AA	BP2CV400-40-AA	1	4	250 MCM	400 MCM	#4/0	397.5	3.25	10.00	3.00
BPCV400-60-AA	BP2CV400-60-AA	1	4	350 MCM	600 MCM	336.4	477	3.25	10.00	3.00
BPCV400-90-AA	BP2CV400-90-AA	1	4	500 MCM	900 MCM	477	795	3.25	9.81	3.00
BPCV400-125-AA	BP2CV400-125-AA	1	4	900 MCM	1250 MCM	715	1113	3.25	10.25	3.25
BPCV400-160-AA	BP2CV400-160-AA	1	4	1250 MCM	1600 MCM	1113	1431	3.75	11.38	4.38
BPCV400-200-AA	BP2CV400-200-AA	1	4	1500 MCM	2000 MCM	1272	1780	3.75	11.50	4.50
BPCV400-250-AA	BP2CV400-250-AA	1	4	2000 MCM	2500 MCM	1780	2300	3.75	11.50	4.50
BPCV500-10-AA	BP2CV500-10-AA	2	5	4 STR	#1/0	4	#1/0	3.25	9.50	1.88
BPCV500-25-AA	BP2CV500-25-AA	1	5	1/0 STR	250 MCM	#1/0	#4/0	3.25	10.50	3.00
BPCV500-40-AA	BP2CV500-40-AA	1	5	250 MCM	400 MCM	#4/0	397.5	3.25	10.50	3.00
BPCV500-60-AA	BP2CV500-60-AA	1	5	350 MCM	600 MCM	336.4	477	3.25	10.50	3.00
BPCV500-90-AA	BP2CV500-90-AA	1	5	500 MCM	900 MCM	477	795	3.25	10.50	3.00
BPCV500-125-AA	BP2CV500-125-AA	1	5	900 MCM	1250 MCM	715	1113	3.25	10.75	3.25
BPCV500-160-AA	BP2CV500-160-AA	1	5	1250 MCM	1600 MCM	1113	1431	3.75	12.13	4.38
BPCV500-200-AA	BP2CV500-200-AA	1	5	1500 MCM	2000 MCM	1272	1780	3.75	12.00	4.50
BPCV500-250-AA	BP2CV500-250-AA	1	5	2000 MCM	2500 MCM	1780	2300	3.75	12.00	4.50
BPCV600-25-AA	BP2CV600-25-AA	1	6	1/0 STR	250 MCM	#1/0	#4/0	3.50	12.88	3.00
BPCV600-90-AA	BP2CV600-90-AA	1	6	500 MCM	900 MCM	477	795	4.00	12.00	3.00
BPCV600-250-AA	BP2CV600-250-AA	1	6	2000 MCM	2500 MCM	1780	2300	4.00	13.50	4.50
BPCV600R-60-AA	BP2CV600R-60-AA	1	6 OD	350 MCM	600 MCM	336.4	477	3.25	11.00	3.00
BPCV800-25-AA*	BP2CV800-25-AA*	1	8	1/0 STR	250 MCM	1/0 STR	4/0 STR	5.00	13.88	3.00
BPCV800-200-AA*	BP2CV800-200-AA*	1	8	1500 MCM	2000 MCM	1272	1780	5.00	15.38	4.50
BPCV800R-200-AA*	BP2CV800R-200-AA*	1	8	1500 MCM	2000 MCM	1272	1780	5.00	15.38	4.50
BPCV118R-90-AA	BP2CV118R-90-AA	1	30MM	500 MCM	900 MCM	477	795	2.75	6.63	3.00
BPCV118R-125-AA	BP2CV118R-125-AA	1	30MM	900 MCM	1250 MCM	715	1113	2.75	6.75	3.25
BPCV118R-125-S-AA	BP2CV118R-125-S-AA	1	30MM	600 MCM	1250 MCM	556.5	1113	2.75	6.75	3.25
BPCV157R-125-S-AA	BP2CV157R-125-S-AA	1	40MM	600 MCM	1250 MCM	556.5	1113	2.75	6.88	3.25

* Items with * have 6 bolts

© 2011, AFL, all rights reserved. PP-3-00254, Revision 3, 11.8.2022
Specifications are subject to change without notice.

DOSSERT®

TYPE PFTS-N-AA

Pipe to NEMA Pad

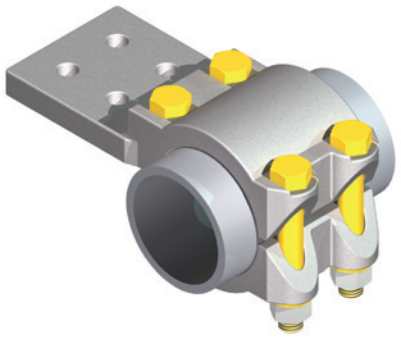

Tee tap is designed to provide terminal connections on side of tubular bus. Four clamp bolts ensure positive electrical contact. Pad conforms to NEMA standards.

Material

Aluminum Alloy

Hardware

Yellow anodized aluminum bolts, nuts and lockwashers.

Notes

- For Stainless Steel bolts, lockwashers and Everdur nuts, add "-SSHBN" to catalog number. EX: PFTS6-00-1-6N4-AA-SSHBN
- For Galvanized Steel Hardware, add "-GS" to catalog number. EX: PFTS300-1-2N-AA-GS
- *Design has 6 Bolts

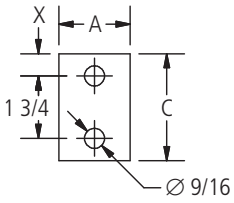

FIG. 1

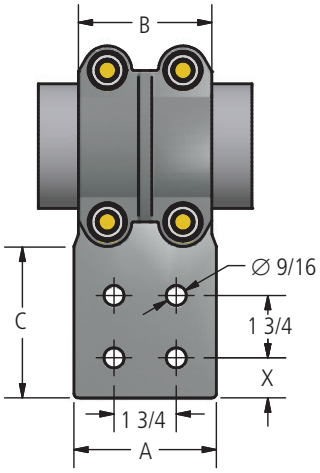

FIG. 2

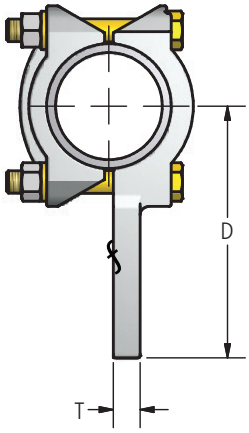

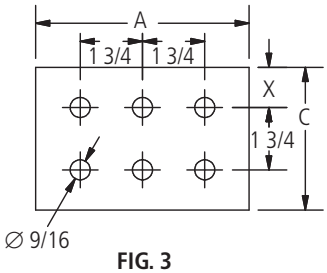

FIG. 3

Ordering Information

CATALOG NUMBER	SPS	FIG. NO.	DIMENSIONS IN INCHES						BOLT SIZE
			A	B	C	D	T	X	
PFTS75-1-2N-AA	3/4	1	2.00	2.75	3.00	4.63	0.38	0.63	1/2
PFTS75-1-4N-AA	3/4	2	3.00	2.75	3.00	4.63	0.38	0.63	1/2
PFTS100-1-2N-AA	1	1	2.00	2.75	3.00	4.81	0.38	0.63	1/2
PFTS100-1-3N-AA	1	2	3.00	2.75	3.00	4.81	0.38	0.63	1/2
PFTS100-1-4N-AA	1	2	4.00	2.75	3.00	4.81	0.38	0.63	1/2
PFTS100-1-4N4-AA	1	2	4.00	2.75	4.00	4.81	0.38	1.13	1/2
PFTS125-1-2N-AA	1 1/4	1	2.00	3.00	3.00	4.94	0.50	0.63	1/2
PFTS125-1-3N-AA	1 1/4	2	3.00	3.00	3.00	4.94	0.50	0.63	1/2
PFTS125-1-4N-AA	1 1/4	2	3.00	3.00	3.00	4.94	0.50	0.63	1/2
PFTS125-14N4-AA	1 1/4	2	4.00	3.00	4.00	5.97	0.50	1.13	1/2

© 2011, AFL, all rights reserved. PP-3-00395, Revision 6, 12.18.18
Specifications are subject to change without notice.

DOSSERT®

TYPE PFTS-N-AA (cont.)

Pipe to NEMA Pad

Ordering Information

CATALOG NUMBER	SPS	FIG. NO.	DIMENSIONS IN INCHES						BOLT SIZE
			A	B	C	D	T	X	
PFTS150-1-2N-AA	1 1/2	1	2.00	3.00	3.00	5.06	0.50	0.63	1/2
PFTS150-1-3N-AA	1 1/2	2	3.00	3.00	3.00	5.06	0.50	0.63	1/2
PFTS150-1-4N-AA	1 1/2	2	3.00	3.00	3.00	5.06	0.50	0.63	1/2
PFTS150-1-4N4-AA	1 1/2	2	4.00	3.00	4.00	6.06	0.50	1.13	1/2
PFTS200-1-2N-AA	2	1	2.00	3.25	3.00	5.31	0.63	0.63	1/2
PFTS200-1-3N-AA	2	2	3.00	3.25	3.00	5.31	0.63	0.63	1/2
PFTS200-1-4N-AA	2	2	3.00	3.25	3.00	5.31	0.63	0.63	1/2
PFTS200-1-4N4-AA	2	2	4.00	3.25	4.00	6.31	0.63	1.13	1/2
PFTS250-1-2N-AA	2 1/2	1	2.00	3.25	3.00	5.56	0.63	0.63	1/2
PFTS250-1-3N-AA	2 1/2	2	3.00	3.25	3.00	5.56	0.75	0.63	1/2
PFTS250-1-4N-AA	2 1/2	2	3.00	3.25	3.00	5.56	0.75	0.63	1/2
PFTS250-1-4N4-AA	2 1/2	2	4.00	3.25	4.00	6.56	0.75	1.13	1/2
PFTS300-1-2N-AA	3	1	2.00	3.75	3.00	6.06	0.75	0.63	5/8
PFTS300-1-3N-AA	3	2	3.00	3.75	3.00	6.06	0.75	0.63	5/8
PFTS300-1-4N-AA	3	2	3.00	3.75	3.50	6.38	0.75	0.63	5/8
PFTS300-1-4N4-AA	3	2	4.00	3.75	4.00	7.06	0.75	1.13	5/8
PFTS350-1-2N-AA	3 1/2	1	2.00	3.75	3.00	6.31	0.88	0.63	5/8
PFTS350-1-4N-AA	3 1/2	2	4.00	3.75	3.00	6.31	0.88	0.63	5/8
PFTS350-1-4N4-AA	3 1/2	2	4.00	3.75	4.00	7.31	0.88	1.13	5/8
PFTS350-1-6N4-AA	3 1/2	3	6.00	3.75	4.00	7.31	0.88	1.13	5/8
PFTS400-1-2N-AA	4	1	2.00	3.75	3.00	6.56	0.88	0.63	5/8
PFTS400-1-4N-AA	4	2	4.00	3.75	3.00	6.56	0.88	0.63	5/8
PFTS400-1-4N4-AA	4	2	4.00	3.75	4.00	7.56	0.88	1.13	5/8
PFTS400-1-6N4-AA	4	3	6.00	3.75	4.00	7.56	0.88	1.13	5/8
PFTS500-1-2N-AA	5	1	2.00	3.75	3.00	7.13	1.00	0.63	5/8
PFTS500-1-4N-AA	5	2	3.00	3.75	3.00	7.13	1.00	0.63	5/8
PFTS500-1-4N4-AA	5	2	4.00	3.75	4.00	8.09	1.00	1.13	5/8
PFTS500-1-6N4-AA	5	3	6.00	3.75	4.00	8.13	1.00	1.13	5/8
PFTS500R-1-4N4-AA	5 OD	2	4.00	3.25	4.00	7.81	1.00	1.13	5/8
PFTS600-1-4N4-AA *	6	2	4.00	6.00	4.00	8.75	1.00	1.13	5/8
PFTS600-1.125T-4N4-AA *	6	2	4.00	6.00	4.00	8.75	1.13	1.13	5/8
PFTS600-1-6N4-AA *	6	3	6.00	8.00	4.00	8.63	1.13	1.13	5/8
PFTS800R-1-4N4-AA *	8 OD	2	4.00	5.00	4.00	9.31	1.13	1.13	5/8
PFTS800R-1-6N4-AA *	8 OD	3	6.00	5.00	4.00	9.31	1.13	1.13	5/8

*Design has 6 Bolts

© 2011, AFL, all rights reserved. PP-3-00395, Revision 6, 12.18.18
Specifications are subject to change without notice.

DOSSERT®

TYPE U2T-AA, UUTT-AA

The U2T-AA is a double tap single run, and the UUTT-AA is a double tap double run. Each tap position independently takes a wide range of conductor sizes.

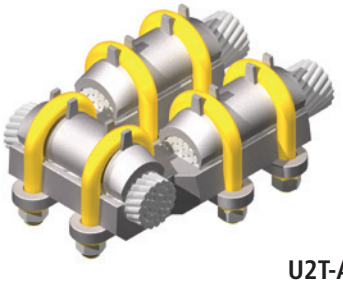

U2T-AA

Material

Aluminum Alloy

Hardware

Yellow anodized aluminum nuts, bolts and lockwashers.

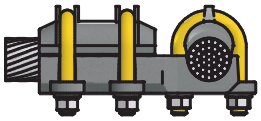

U2T-AA

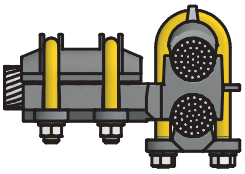

UUTT-AA

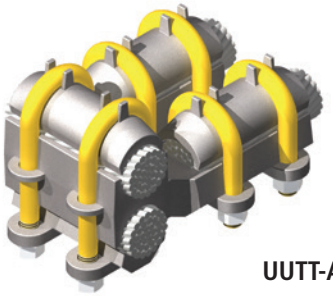

UUTT-AA

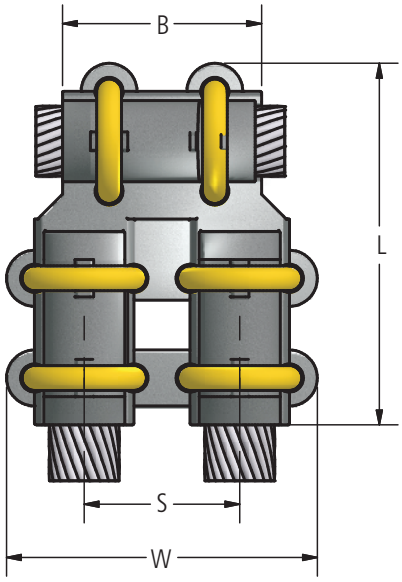

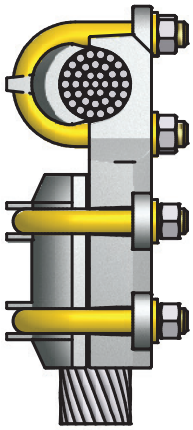

Ordering Information

CATALOG NUMBER		AAC CABLE RANGE RUN		AAC CABLE RANGE TAP		DIMENSIONS IN INCHES				U-BOLT DIAMETER	
		MIN	MAX	MIN	MAX	B	L	S	W	MAIN	TAP
U2T13-13-AA	UUTT13-13-AA	# 6 Stranded	2/0 Stranded	#6 Stranded	2/0 Stranded	3 1/4	4 1/4	1 11/16	3 1/4	5/16	5/16
U2T21-21-AA	UUTT21-21-AA	#1 Stranded	4/0 Stranded	#1 Stranded	4/0 Stranded	3 1/4	4 1/2	1 31/32	3 1/4	3/8	3/8
U2T30-13-AA	UUTT30-13-AA	1/0 Stranded	300 KCMIL	#6 Stranded	2/0 Stranded	3 1/4	4 1/4	1 11/16	3 1/4	3/8	3/8
U2T30-30-AA	UUTT30-30-AA	1/0 Stranded	300 KCMIL	1/0 Stranded	300 KCMIL	3 1/4	4 1/2	2 1/16	4	3/8	3/8
U2T50-13-AA	UUTT50-13-AA	300 KCMIL	500 KCMIL	#6 Stranded	2/0 Stranded	3 1/4	4 3/8	1 11/16	3 1/4	3/8	5/16
U2T50-21-AA	UUTT50-21-AA	300 KCMIL	500 KCMIL	#1 Stranded	4/0 Stranded	3 1/4	4 3/4	1 31/32	3 3/4	3/8	3/8
U2T50-30-AA	UUTT50-30-AA	300 KCMIL	500 KCMIL	1/0 Stranded	300 KCMIL	4 1/4	4 7/8	2 1/16	4	3/8	3/8
U2T50-50-AA	UUTT50-50-AA	300 KCMIL	500 KCMIL	300 KCMIL	500 KCMIL	4 1/4	5 1/8	2 1/4	4 3/8	3/8	3/8
U2T90-13-AA	UUTT90-13-AA	500 KCMIL	800 KCMIL	#6 Stranded	2/0 Stranded	3 1/4	5 1/4	1 11/16	3 1/4	1/2	5/16
U2T90-21-AA	UUTT90-21-AA	500 KCMIL	800 KCMIL	#1 Stranded	4/0 Stranded	3 1/4	5 7/8	1 31/32	3 3/4	1/2	3/8

© 2011, AFL, all rights reserved. PP-3-00488, Revision 0, 1.12.11
Specifications are subject to change without notice.

DOSSERT®

TYPE U2T-AA, UUTT-AA

The U2T-AA is a double tap single run, and the UUTT-AA is a double tap double run.

Ordering Information

CATALOG NUMBER		AAC CABLE RANGE RUN		AAC CABLE RANGE TAP		DIMENSIONS IN INCHES				U-BOLT DIAMETER	
		MIN	MAX	MIN	MAX	B	L	S	W	MAIN	TAP
U2T13-13-AA	UUTT13-13-AA	# 6 Stranded	2/0 Stranded	#6 Stranded	2/0 Stranded	3 1/4	4 1/4	1 11/16	3 1/4	5/16	5/16
U2T21-21-AA	UUTT21-21-AA	#1 Stranded	4/0 Stranded	#1 Stranded	4/0 Stranded	3 1/4	4 1/2	1 31/32	3 1/4	3/8	3/8
U2T30-13-AA	UUTT30-13-AA	1/0 Stranded	300 KCMIL	#6 Stranded	2/0 Stranded	3 1/4	4 1/4	1 11/16	3 1/4	3/8	3/8
U2T30-30-AA	UUTT30-30-AA	1/0 Stranded	300 KCMIL	1/0 Stranded	300 KCMIL	3 1/4	4 1/2	2 1/16	4	3/8	3/8
U2T50-13-AA	UUTT50-13-AA	300 KCMIL	500 KCMIL	#6 Stranded	2/0 Stranded	3 1/4	4 3/8	1 11/16	3 1/4	3/8	5/16
U2T50-21-AA	UUTT50-21-AA	300 KCMIL	500 KCMIL	#1 Stranded	4/0 Stranded	3 1/4	4 3/4	1 31/32	3 3/4	3/8	3/8
U2T50-30-AA	UUTT50-30-AA	300 KCMIL	500 KCMIL	1/0 Stranded	300 KCMIL	4 1/4	4 7/8	2 1/16	4	3/8	3/8
U2T50-50-AA	UUTT50-50-AA	300 KCMIL	500 KCMIL	300 KCMIL	500 KCMIL	4 1/4	5 1/8	2 1/4	4 3/8	3/8	3/8
U2T90-13-AA	UUTT90-13-AA	500 KCMIL	800 KCMIL	#6 Stranded	2/0 Stranded	3 1/4	5 1/4	1 11/16	3 1/4	1/2	5/16
U2T90-21-AA	UUTT90-21-AA	500 KCMIL	800 KCMIL	#1 Stranded	4/0 Stranded	3 1/4	5 7/8	1 31/32	3 3/4	1/2	3/8
U2T90-30-AA	UUTT90-30-AA	500 KCMIL	800 KCMIL	1/0 Stranded	300 KCMIL	4 1/4	6	2 1/16	4	1/2	3/8
U2T90-50-AA	UUTT90-50-AA	500 KCMIL	800 KCMIL	300 KCMIL	500 KCMIL	4 1/4	6 1/4	2 1/4	4 3/8	1/2	3/8
U2T90-90-AA	UUTT90-90-AA	500 KCMIL	800 KCMIL	500 KCMIL	800 KCMIL	5 1/4	6 1/2	2 27/32	5 1/2	1/2	1/2
U2T100-13-AA	UUTT100-13-AA	750 KCMIL	1000 KCMIL	#6 Stranded	2/0 Stranded	4 1/4	5 1/2	1 11/16	3 1/4	1/2	5/16
U2T100-21-AA	UUTT100-21-AA	750 KCMIL	1000 KCMIL	#1 Stranded	4/0 Stranded	4 1/4	5 5/8	1 31/32	3 3/4	1/2	3/8
U2T100-30-AA	UUTT100-30-AA	750 KCMIL	1000 KCMIL	1/0 Stranded	300 KCMIL	4 1/4	5 3/4	2 1/16	4	1/2	3/8
U2T100-50-AA	UUTT100-50-AA	750 KCMIL	1000 KCMIL	300 KCMIL	500 KCMIL	4 1/4	6	2 1/4	4 3/8	1/2	3/8
U2T100-90-AA	UUTT100-90-AA	750 KCMIL	1000 KCMIL	500 KCMIL	800 KCMIL	5 1/4	6 1/4	2 27/32	5 1/2	1/2	1/2
U2T100-100-AA	UUTT100-100-AA	750 KCMIL	1000 KCMIL	750 KCMIL	1000 KCMIL	5 1/4	6 1/2	3	5 7/8	1/2	1/2
U2T150-13-AA	UUTT150-13-AA	1000 KCMIL	1500 KCMIL	#6 Stranded	2/0 Stranded	4 1/4	5 3/4	1 11/16	3 1/4	1/2	5/16
U2T150-21-AA	UUTT150-21-AA	1000 KCMIL	1500 KCMIL	#1 Stranded	4/0 Stranded	4 1/4	5 7/8	1 31/32	3 3/4	1/2	3/8
U2T150-30-AA	UUTT150-30-AA	1000 KCMIL	1500 KCMIL	1/0 Stranded	300 KCMIL	4 1/4	6	2 1/16	4	1/2	3/8
U2T150-50-AA	UUTT150-50-AA	1000 KCMIL	1500 KCMIL	300 KCMIL	500 KCMIL	4 1/4	6 1/4	2 1/4	4 3/8	1/2	3/8
U2T150-90-AA	UUTT150-90-AA	1000 KCMIL	1500 KCMIL	500 KCMIL	800 KCMIL	5 1/4	6 1/2	2 27/32	5 1/2	1/2	1/2
U2T150-100-AA	UUTT150-100-AA	1000 KCMIL	1500 KCMIL	750 KCMIL	1000 KCMIL	5 1/4	6 3/4	3	5 7/8	1/2	1/2
U2T150-150-AA	UUTT150-150-AA	1000 KCMIL	1500 KCMIL	1000 KCMIL	1500 KCMIL	6	7 1/4	3 1/4	6 5/8	1/2	1/2
U2T200-30-AA	UUTT200-30-AA	1500 KCMIL	2000 KCMIL	1/0 Stranded	300 KCMIL	4 1/4	6 1/4	2 1/16	4	1/2	3/8
U2T200-50-AA	UUTT200-50-AA	1500 KCMIL	2000 KCMIL	300 KCMIL	500 KCMIL	4 1/4	6 1/2	2 1/4	4 3/8	1/2	3/8
U2T200-90-AA	UUTT200-90-AA	1500 KCMIL	2000 KCMIL	500 KCMIL	800 KCMIL	5 1/4	6 3/4	2 27/32	5 1/2	1/2	1/2
U2T200-100-AA	UUTT200-100-AA	1500 KCMIL	2000 KCMIL	750 KCMIL	1000 KCMIL	5 1/4	7	3	5 7/8	1/2	1/2
U2T200-150-AA	UUTT200-150-AA	1500 KCMIL	2000 KCMIL	1000 KCMIL	1500 KCMIL	6 3/8	7 1/2	3 1/4	6 5/8	1/2	1/2
U2T200-200-AA	UUTT200-200-AA	1500 KCMIL	2000 KCMIL	1500 KCMIL	2000 KCMIL	6 3/8	8	3 1/2	6 7/8	5/8	1/2

© 2011, AFL, all rights reserved. PP-3-00488, Revision 0, 1.12.11
Specifications are subject to change without notice.

DOSSERT®

TYPE UPT-AA

U-bolt Pipe to Cable Tee Connector

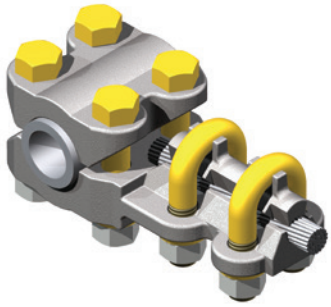

Tee connector is designed for connecting stranded aluminum or ACSR conductor to tubular bus. Four clamp bolts on each conductor insures positive electrical contact.

Material

Aluminum Alloy

Hardware

Yellow anodized aluminum bolts, U-bolt, nuts, and lockwashers.

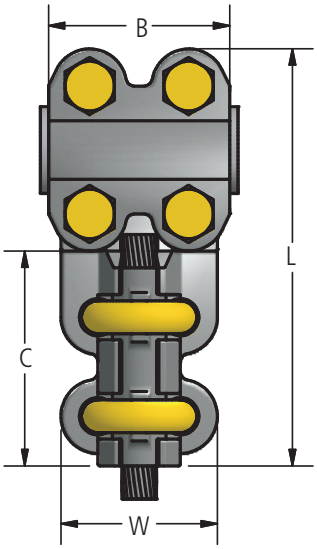

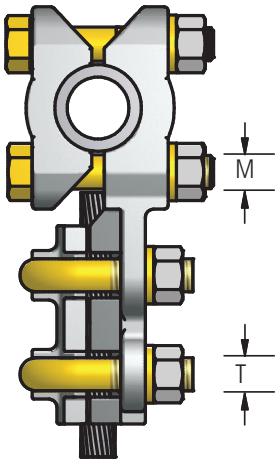

Ordering Information

CATALOG NUMBER	SPS	AAC CABLE RANGE		DIMENSIONS IN INCHES					
		MIN	MAX	B	C	L	M	T	W
UPT50-13-AA	1/2	6STR	2/0STR	2 1/2	3	5 3/4	1/2	1/2	2 1/8
UPT50-21-AA	1/2	1STR	4/0STR	2 1/2	3	5 3/4	1/2	1/2	2 7/32
UPT50-30-AA	1/2	1/0STR	300MCM	2 1/2	3 1/4	6	1/2	1/2	2 5/16
UPT75-13-AA	3/4	6STR	2/0STR	2 3/4	3	6	1/2	1/2	2 1/8
UPT75-21-AA	3/4	1STR	4/0STR	2 3/4	3	6	1/2	1/2	2 7/32
UPT75-30-AA	3/4	1/0STR	300MCM	2 3/4	3 1/4	6 1/4	1/2	1/2	2 5/16
UPT75-50-AA	3/4	300MCM	500MCM	2 3/4	3 1/4	6 1/4	1/2	1/2	2 1/2
UPT100-13-AA	1	6STR	2/0STR	2 3/4	3	6 1/4	1/2	1/2	2 1/8
UPT100-21-AA	1	1STR	4/0STR	2 3/4	3	6 1/4	1/2	1/2	2 7/32
UPT100-30-AA	1	1/0STR	300MCM	2 3/4	3 1/4	6 1/2	1/2	1/2	2 5/16
UPT100-50-AA	1	300MCM	500MCM	2 3/4	3 1/4	6 1/2	1/2	1/2	2 1/2
UPT100-90-AA	1	500MCM	900MCM	2 3/4	3 1/2	6 3/4	1/2	1/2	2 13/16
UPT125-13-AA	1 1/4	6STR	2/0STR	3	3	6 5/8	1/2	1/2	2 1/8

© 2011, AFL, all rights reserved. PP-3-00512, Revision 1, 4.16.18
Specifications are subject to change without notice.

DOSSERT®

TYPE UPT-AA

U-bolt Pipe to Cable Tee Connector

Ordering Information

CATALOG NUMBER	SPS	AAC CABLE RANGE		DIMENSIONS IN INCHES					
		MIN	MAX	B	C	L	M	T	W
UPT125-21-AA	1 1/4	1STR	4/0STR	3	3	6 5/8	1/2	1/2	2 7/32
UPT125-30-AA	1 1/4	1/0STR	300MCM	3	3 1/4	6 7/8	1/2	1/2	2 5/16
UPT125-50-AA	1 1/4	300MCM	500MCM	3	3 1/4	6 7/8	1/2	1/2	2 1/2
UPT125-90-AA	1 1/4	500MCM	900MCM	3	3 1/2	7 1/8	1/2	1/2	2 13/16
UPT125-100-AA	1 1/4	750MCM	1000MCM	3	3 1/2	7 1/8	1/2	1/2	2 27/32
UPT150-13-AA	1 1/2	6STR	2/0STR	3	3	6 7/8	1/2	1/2	2 7/32
UPT150-21-AA	1 1/2	1STR	4/0STR	3	3	6 7/8	1/2	1/2	2 7/32
UPT150-30-AA	1 1/2	1/0STR	300MCM	3	3 1/4	7 1/8	1/2	1/2	2 5/16
UPT150-50-AA	1 1/2	300MCM	500MCM	3	3 1/4	7 1/8	1/2	1/2	2 1/2
UPT150-90-AA	1 1/2	500MCM	900MCM	3	3 1/2	7 3/8	1/2	1/2	2 13/16
UPT150-100-AA	1 1/2	800MCM	1000MCM	3	3 1/2	7 3/8	1/2	1/2	2 27/32
UPT150-150-AA	1 1/2	1000MCM	1500MCM	3	4 1/2	8 3/8	1/2	5/8	3 1/4
UPT150-200-AA	1 1/2	1500MCM	2000MCM	3	4 1/2	8 3/8	1/2	5/8	3 3/4
UPT200-21-AA	2	1STR	4/0STR	3 1/4	3	7 3/8	1/2	1/2	2 7/32
UPT200-30-AA	2	1/0STR	300MCM	3 1/4	3 1/4	7 5/8	1/2	1/2	2 5/16
UPT200-50-AA	2	300MCM	500MCM	3 1/4	3 1/4	7 5/8	1/2	1/2	2 1/2
UPT200-90-AA	2	500MCM	900MCM	3 1/4	3 1/2	7 7/8	1/2	1/2	2 13/16
UPT200-100-AA	2	750MCM	1000MCM	3 1/4	3 1/2	7 7/8	1/2	1/2	2 27/32
UPT200-150-AA	2	1000MCM	1500MCM	3 1/4	4 1/2	8 7/8	1/2	5/8	3 1/4
UPT200-200-AA	2	1500MCM	2000MCM	3 1/4	4 1/2	8 7/8	1/2	5/8	3 3/4
UPT250-30-AA	2 1/2	1/0STR	300MCM	3 1/4	3 1/4	8 1/8	1/2	1/2	2 5/16
UPT250-50-AA	2 1/2	300MCM	500MCM	3 1/4	3 1/4	8 1/8	1/2	1/2	2 1/2
UPT250-90-AA	2 1/2	500MCM	900MCM	3 1/4	3 1/2	8 3/8	1/2	1/2	2 13/16
UPT250-100-AA	2 1/2	750MCM	1000MCM	3 1/4	3 1/2	8 3/8	1/2	1/2	2 27/32
UPT250-150-AA	2 1/2	1000MCM	1500MCM	3 1/4	4 1/2	9 3/8	1/2	5/8	3 1/4
UPT250-200-AA	2 1/2	1500MCM	2000MCM	3 1/4	4 1/2	9 3/8	1/2	5/8	3 3/4
UPT300-30-AA	3	1/0STR	300MCM	3 1/4	3 1/4	8 3/4	1/2	1/2	2 5/16
UPT300-50-AA	3	300MCM	500MCM	3 1/4	3 1/4	8 3/4	1/2	1/2	2 1/2
UPT300-90-AA	3	500MCM	900MCM	3 1/2	3 1/2	9	1/2	1/2	2 13/16
UPT300-100-AA	3	750MCM	1000MCM	3 1/4	3 1/2	9	1/2	1/2	2 27/32
UPT300-150-AA	3	1000MCM	1500MCM	3 3/4	4 1/2	10 3/8	5/8	5/8	3 1/4
UPT300-200-AA	3	1500MCM	2000MCM	3 3/4	4 1/2	10 3/8	5/8	5/8	3 3/4
UPT400-30-AA	4	1/0STR	300MCM	3 3/4	4 1/2	10 3/8	5/8	5/8	2 5/16
UPT500-150-AA	5	1000MCM	1500MCM	3 3/4	4	10 3/8	5/8	5/8	3 1/4

© 2011, AFL, all rights reserved. PP-3-00512, Revision 1, 4.16.18
Specifications are subject to change without notice.

DOSSERT®

TYPE UT-AA, UUT-AA

U-bolt Tee Connector

A rugged U-bolt high compression clamp type tee connector which takes a wide range of cable sizes in both the run and tap sections. Designed to withstand high compressive clamping action on all cables within specified cable ranges.

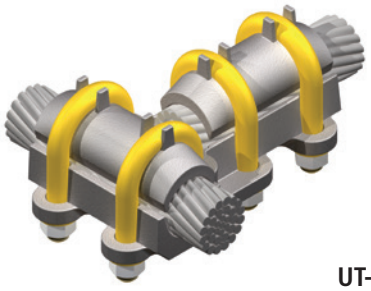

UT-AA

Material

Aluminum Alloy

Hardware

Yellow anodized aluminum U-bolts, nuts, and lockwashers.

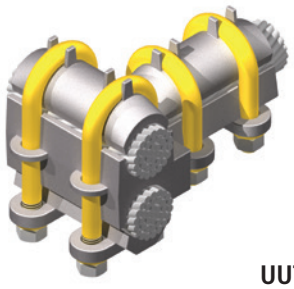

UUT-AA

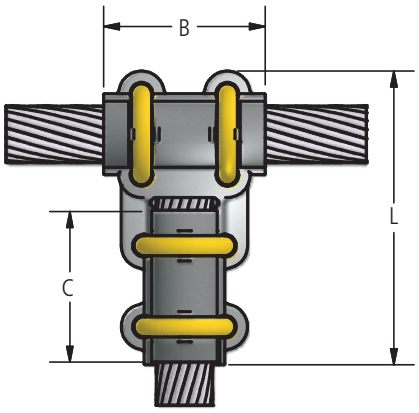

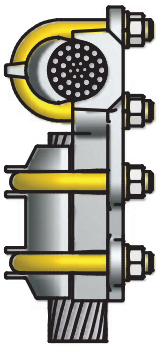

UT-AA

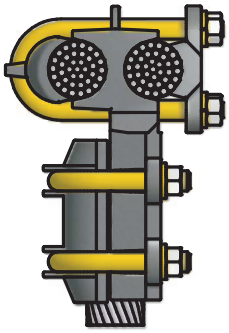

UUT-AA

continued

© 2011, AFL, all rights reserved. PP-3-00532. Revision 3, 7.11.19
Specifications are subject to change without notice.

230 kV Aluminum Bolted Tee & Vee Connectors

DOSSERT®

TYPE UT-AA, UUT-AA

U-bolt Tee Connector

Ordering Information

AAC CONDUCTOR										
CATALOG NUMBER		CABLE RANGE				DIMENSION IN INCHES				
UT-AA	UUT-AA	RUN		TAP		B	C	L	U-BOLT	
		MIN	MAX	MIN	MAX				RUN	TAP
UT13-13-AA	UUT13-13-AA	#6 STR	2/0 STR	#6 STR	2/0 STR	3.00	3.00	5.38	1/2	1/2
UT21-13-AA	UUT21-13-AA	#1 STR	4/0 STR	#6 STR	2/0 STR	3.00	3.00	5.50	1/2	1/2
UT21-21-AA	UUT21-21-AA	#1 STR	4/0 STR	#1 STR	4/0 STR	3.00	3.00	5.50	1/2	1/2
UT30-13-AA	UUT30-13-AA	1/0 STR	300 MCM	#6 STR	2/0 STR	3.25	3.00	5.63	1/2	1/2
UT30-21-AA	UUT30-21-AA	1/0 STR	300 MCM	#1 STR	4/0 STR	3.25	3.00	5.63	1/2	1/2
UT30-30-AA	UUT30-30-AA	1/0 STR	300 MCM	1/0 STR	300 MCM	3.25	3.25	5.88	1/2	1/2
UT50-13-AA	UUT50-13-AA	300 MCM	500 MCM	#6 STR	2/0 STR	3.25	3.00	5.75	1/2	1/2
UT50-21-AA	UUT50-21-AA	300 MCM	500 MCM	#1 STR	4/0 STR	3.25	3.00	5.75	1/2	1/2
UT50-30-AA	UUT50-30-AA	300 MCM	500 MCM	1/0 STR	300 MCM	3.25	3.25	6.00	1/2	1/2
UT50-50-AA	UUT50-50-AA	300 MCM	500 MCM	300 MCM	500 MCM	3.25	3.25	6.00	1/2	1/2
UT90-13-AA	UUT90-13-AA	500 MCM	900 MCM	#6 STR	2/0 STR	3.50	3.00	6.06	1/2	1/2
UT90-21-AA	UUT90-21-AA	500 MCM	900 MCM	#1 STR	4/0 STR	3.50	3.00	6.06	1/2	1/2
UT90-30-AA	UUT90-30-AA	500 MCM	900 MCM	1/0 STR	300 MCM	3.50	3.25	6.31	1/2	1/2
UT90-50-AA	UUT90-50-AA	500 MCM	900 MCM	300 MCM	500 MCM	3.50	3.25	6.31	1/2	1/2
UT90-90-AA	UUT90-90-AA	500 MCM	900 MCM	500 MCM	900 MCM	3.50	3.50	6.56	1/2	1/2
UT100-30-AA	UUT100-30-AA	750 MCM	1000 MCM	1/0 STR	300 MCM	3.50	3.25	6.38	1/2	1/2
UT100-50-AA	UUT100-50-AA	750 MCM	1000 MCM	300 MCM	500 MCM	3.50	3.25	6.38	1/2	1/2
UT100-90-AA	UUT100-90-AA	750 MCM	1000 MCM	500 MCM	900 MCM	3.50	3.50	6.63	1/2	1/2
UT100-100-AA	UUT100-100-AA	750 MCM	1000 MCM	750 MCM	1000 MCM	3.50	3.50	6.63	1/2	1/2
UT125-30-AA	UUT125-30-AA	600 MCM	1250 MCM	1/0 STR	300 MCM	3.50	3.25	6.50	1/2	1/2
UT125-50-AA	UUT125-50-AA	600 MCM	1250 MCM	300 MCM	500 MCM	3.50	3.25	6.50	1/2	1/2
UT125-90-AA	UUT125-90-AA	600 MCM	1250 MCM	500 MCM	900 MCM	3.50	3.50	6.75	1/2	1/2
UT125-100-AA	UUT125-100-AA	600 MCM	1250 MCM	750 MCM	1000 MCM	3.50	3.50	6.75	1/2	1/2
UT125-125-AA	UUT125-125-AA	600 MCM	1250 MCM	600 MCM	1250 MCM	3.50	3.50	6.75	1/2	1/2
UT150-30-AA	UUT150-30-AA	1000 MCM	1500 MCM	1/0 STR	300 MCM	4.50	3.25	6.88	5/8	1/2
UT150-50-AA	UUT150-50-AA	1000 MCM	1500 MCM	300 MCM	500 MCM	4.50	3.25	6.88	5/8	1/2
UT150-90-AA	UUT150-90-AA	1000 MCM	1500 MCM	500 MCM	900 MCM	4.50	3.50	7.13	5/8	1/2
UT150-100-AA	UUT150-100-AA	1000 MCM	1500 MCM	750 MCM	1000 MCM	4.50	3.50	7.13	5/8	1/2
UT150-150-AA	UUT150-150-AA	1000 MCM	1500 MCM	1000 MCM	1500 MCM	4.50	4.50	8.00	5/8	5/8
UT200-30-AA	UUT200-30-AA	1500 MCM	2000 MCM	1/0 STR	300 MCM	4.50	3.25	7.06	5/8	1/2
UT200-50-AA	UUT200-50-AA	1500 MCM	2000 MCM	300 MCM	500 MCM	4.50	3.25	7.06	5/8	1/2
UT200-90-AA	UUT200-90-AA	1500 MCM	2000 MCM	500 MCM	900 MCM	4.50	3.50	7.31	5/8	1/2
UT200-100-AA	UUT200-100-AA	1500 MCM	2000 MCM	750 MCM	1000 MCM	4.50	3.50	7.31	5/8	1/2
UT200-150-AA	UUT200-150-AA	1500 MCM	2000 MCM	1000 MCM	1500 MCM	4.50	4.50	8.31	5/8	5/8
UT200-200-AA	UUT200-200-AA	1500 MCM	2000 MCM	1500 MCM	2000 MCM	4.50	4.50	8.31	5/8	5/8
UT250-30-AA	UUT250-30-AA	2000 MCM	2500 MCM	1/0 STR	300 MCM	4.50	3.25	7.56	5/8	1/2
UT250-50-AA	UUT250-50-AA	2000 MCM	2500 MCM	300 MCM	500 MCM	4.50	3.25	7.31	5/8	1/2
UT250-90-AA	UUT250-90-AA	2000 MCM	2500 MCM	500 MCM	900 MCM	4.50	3.50	7.56	5/8	1/2
UT250-100-AA	UUT250-100-AA	2000 MCM	2500 MCM	750 MCM	1000 MCM	4.50	3.50	7.56	5/8	1/2
UT250-150-AA	UUT250-150-AA	2000 MCM	2500 MCM	1000 MCM	1500 MCM	4.50	4.50	8.56	5/8	5/8
UT250-200-AA	UUT250-200-AA	2000 MCM	2500 MCM	1500 MCM	2000 MCM	4.50	4.50	8.56	5/8	5/8
UT250-250-AA	UUT250-250-AA	2000 MCM	2500 MCM	2000 MCM	2500 MCM	4.50	4.50	8.56	5/8	5/8

continued

© 2011, AFL, all rights reserved. PP-3-00532. Revision 3, 7.11.19
Specifications are subject to change without notice.

DOSSERT®

TYPE UT-AA, UUT-AA

U-bolt Tee Connector

Ordering Information

ACSR CONDUCTOR											
CATALOG NUMBER		CABLE RANGE				DIMENSION IN INCHES				
UT-AA	UUT-AA	RUN		TAP		B	C	L	U-BOLT	
		MIN	MAX	MIN	MAX				RUN	TAP
UT13-13-AA	UUT13-13-AA	6 (6/1)	2/0 (6/1)	6 (6/1)	2/0 (6/1)	3.00	3.00	5.38	1/2	1/2
UT21-13-AA	UUT21-13-AA	1 (6/1)	3/0 (6/1)	6 (6/1)	2/0 (6/1)	3.00	3.00	5.50	1/2	1/2
UT21-21-AA	UUT21-21-AA	1 (6/1)	3/0 (6/1)	1 (6/1)	3/0 (6/1)	3.00	3.00	5.50	1/2	1/2
UT30-13-AA	UUT30-13-AA	1/0 (6/1)	266.8 (18/1)	6 (6/1)	2/0 (6/1)	3.25	3.00	5.63	1/2	1/2
UT30-21-AA	UUT30-21-AA	1/0 (6/1)	266.8 (18/1)	1 (6/1)	3/0 (6/1)	3.25	3.00	5.63	1/2	1/2
UT30-30-AA	UUT30-30-AA	1/0 (6/1)	266.8 (18/1)	1/0 (6/1)	266.8 (18/1)	3.25	3.25	5.88	1/2	1/2
UT50-13-AA	UUT50-13-AA	266.8 (6/7)	477 (18/1)	6 (6/1)	2/0 (6/1)	3.25	3.00	5.75	1/2	1/2
UT50-21-AA	UUT50-21-AA	266.8 (6/7)	477 (18/1)	1 (6/1)	3/0 (6/1)	3.25	3.00	5.75	1/2	1/2
UT50-30-AA	UUT50-30-AA	266.8 (6/7)	477 (18/1)	1/0 (6/1)	266.8 (18/1)	3.25	3.25	6.00	1/2	1/2
UT50-50-AA	UUT50-50-AA	266.8 (6/7)	477 (18/1)	266.8 (6/7)	477 (18/1)	3.25	3.25	6.00	1/2	1/2
UT90-13-AA	UUT90-13-AA	477 (18/1)	795 (54/7)	6 (6/1)	2/0 (6/1)	3.50	3.00	6.06	1/2	1/2
UT90-21-AA	UUT90-21-AA	477 (18/1)	795 (54/7)	1 (6/1)	3/0 (6/1)	3.50	3.00	6.06	1/2	1/2
UT90-30-AA	UUT90-30-AA	477 (18/1)	795 (54/7)	1/0 (6/1)	266.8 (18/1)	3.50	3.25	6.31	1/2	1/2
UT90-50-AA	UUT90-50-AA	477 (18/1)	795 (54/7)	266.8 (6/7)	477 (18/1)	3.50	3.25	6.31	1/2	1/2
UT90-90-AA	UUT90-90-AA	477 (18/1)	795 (54/7)	477 (18/1)	795 (54/7)	3.50	3.50	6.56	1/2	1/2
UT100-30-AA	UUT100-30-AA	636 (30/19)	900 (45/7)	1/0 (6/1)	266.8 (18/1)	3.50	3.25	6.38	1/2	1/2
UT100-50-AA	UUT100-50-AA	636 (30/19)	900 (45/7)	266.8 (6/7)	477 (18/1)	3.50	3.25	6.38	1/2	1/2
UT100-90-AA	UUT100-90-AA	636 (30/19)	900 (45/7)	477 (18/1)	795 (54/7)	3.50	3.50	6.63	1/2	1/2
UT100-100-AA	UUT100-100-AA	636 (30/19)	900 (45/7)	636 (30/19)	900 (45/7)	3.50	3.50	6.63	1/2	1/2
UT125-30-AA	UUT125-30-AA	636 (36/1)	1113 (54/19)	1/0 (6/1)	266.8 (18/1)	3.50	3.25	6.50	1/2	1/2
UT125-50-AA	UUT125-50-AA	636 (36/1)	1113 (54/19)	266.8 (6/7)	477 (18/1)	3.50	3.25	6.50	1/2	1/2
UT125-90-AA	UUT125-90-AA	636 (36/1)	1113 (54/19)	477 (18/1)	795 (54/7)	3.50	3.50	6.75	1/2	1/2
UT125-100-AA	UUT125-100-AA	636 (36/1)	1113 (54/19)	636 (30/19)	900 (45/7)	3.50	3.50	6.75	1/2	1/2
UT125-125-AA	UUT125-125-AA	636 (36/1)	1113 (54/19)	636 (36/1)	1113 (54/19)	3.50	3.50	6.75	1/2	1/2
UT150-30-AA	UUT150-30-AA	954 (45/7)	1351.5 (45/7)	1/0 (6/1)	266.8 (18/1)	4.50	3.25	6.88	5/8	1/2
UT150-50-AA	UUT150-50-AA	954 (45/7)	1351.5 (45/7)	266.8 (6/7)	477 (18/1)	4.50	3.25	6.88	5/8	1/2
UT150-90-AA	UUT150-90-AA	954 (45/7)	1351.5 (45/7)	477 (18/1)	795 (54/7)	4.50	3.50	7.13	5/8	1/2
UT150-100-AA	UUT150-100-AA	954 (45/7)	1351.5 (45/7)	636 (30/19)	900 (45/7)	4.50	3.50	7.13	5/8	1/2
UT150-150-AA	UUT150-150-AA	954 (45/7)	1351.5 (45/7)	954 (45/7)	1351.5 (45/7)	4.50	4.50	8.00	5/8	5/8
UT200-30-AA	UUT200-30-AA	1351.3 (45/7)	1780 (84/19)	1/0 (6/1)	266.8 (18/1)	4.50	3.25	7.06	5/8	1/2
UT200-50-AA	UUT200-50-AA	1351.3 (45/7)	1780 (84/19)	266.8 (6/7)	477 (18/1)	4.50	3.25	7.06	5/8	1/2
UT200-90-AA	UUT200-90-AA	1351.3 (45/7)	1780 (84/19)	477 (18/1)	795 (54/7)	4.50	3.50	7.31	5/8	1/2
UT200-100-AA	UUT200-100-AA	1351.3 (45/7)	1780 (84/19)	636 (30/19)	900 (45/7)	4.50	3.50	7.31	5/8	1/2
UT200-150-AA	UUT200-150-AA	1351.3 (45/7)	1780 (84/19)	954 (45/7)	1351.5 (45/7)	4.50	4.50	8.31	5/8	5/8
UT200-200-AA	UUT200-200-AA	1351.3 (45/7)	1780 (84/19)	1351.3 (45/7)	1780 (84/19)	4.50	4.50	8.31	5/8	5/8
UT250-30-AA	UUT250-30-AA	2034 (72/7)	2312 (76/19)	1/0 (6/1)	266.8 (18/1)	4.50	3.25	7.56	5/8	1/2
UT250-50-AA	UUT250-50-AA	2034 (72/7)	2312 (76/19)	266.8 (6/7)	477 (18/1)	4.50	3.25	7.31	5/8	1/2
UT250-90-AA	UUT250-90-AA	2034 (72/7)	2312 (76/19)	477 (18/1)	795 (54/7)	4.50	3.50	7.56	5/8	1/2
UT250-100-AA	UUT250-100-AA	2034 (72/7)	2312 (76/19)	636 (30/19)	900 (45/7)	4.50	3.50	7.56	5/8	1/2
UT250-150-AA	UUT250-150-AA	2034 (72/7)	2312 (76/19)	954 (45/7)	1351.5 (45/7)	4.50	4.50	8.56	5/8	5/8
UT250-200-AA	UUT250-200-AA	2034 (72/7)	2312 (76/19)	1351.3 (45/7)	1780 (84/19)	4.50	4.50	8.56	5/8	5/8
UT250-250-AA	UUT250-250-AA	2034 (72/7)	2312 (76/19)	2034 (72/7)	2312 (76/19	4.50	4.50	8.56	5/8	5/8

© 2011, AFL, all rights reserved. PP-3-00532. Revision 3, 7.11.19
Specifications are subject to change without notice.

230 kV Aluminum Bolted
Tee & Vee Connectors

DOSSERT®

TYPE VBP-20-AA, VBP-30-AA

20 Degree and 30 Degree Vee Connection

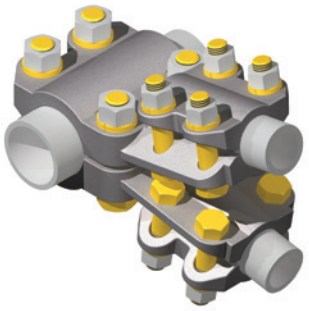

A-frame connectors are designed to make fast, reliable A-frame assemblies. Connectors can be used on Schedule 40 and Schedule 80 pipe.

Material

Aluminum Alloy

Hardware

Yellow anodized aluminum bolts, nuts, and lockwashers.

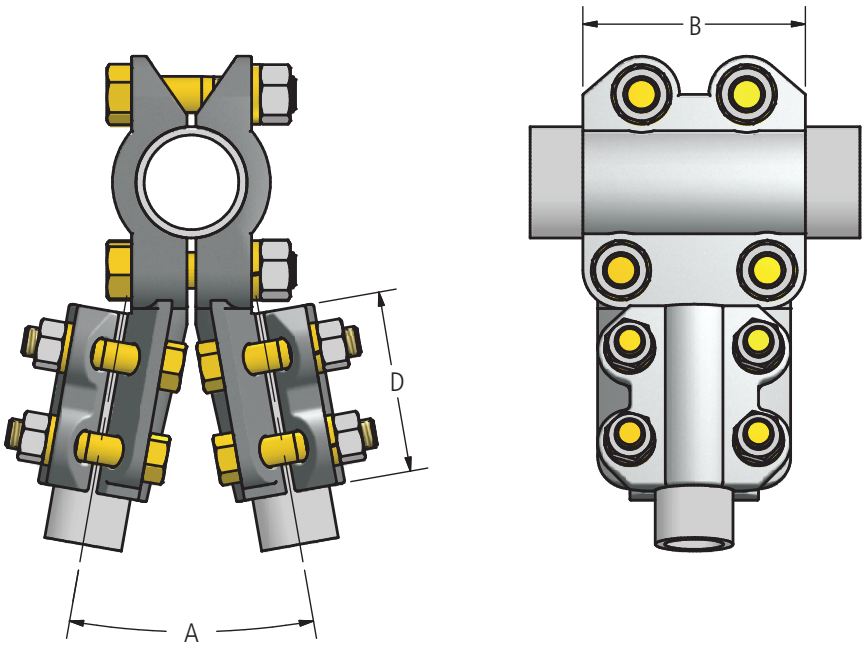

Ordering Information

CATALOG NUMBER		SPS		DIMENSIONS IN INCHES		BOLT SIZE
A = 20 DEGREE	A = 30 DEGREE	RUN	TAP	B	D	
VBP100-75-20-AA	VBP100-75-30-AA	1	3/4	2 3/4	2 3/4	1/2
VBP100-100-20-AA	VBP100-100-30-AA	1	1	2 3/4	2 3/4	1/2
VBP125-75-20-AA	VBP125-75-30-AA	1-1/4	3/4	3	2 3/4	1/2
VBP125-100-20-AA	VBP125-100-30-AA	1-1/4	1	3	2 3/4	1/2
VBP150-100-20-AA	VBP150-100-30-AA	1-1/2	1	3	2 3/4	1/2
VBP150-125-20-AA	VBP150-125-30-AA	1-1/2	1-1/4	3	3	1/2
VBP150-150-20-AA	VBP150-150-30-AA	1-1/2	1-1/2	3	3	1/2
VBP200-100-20-AA	VBP200-100-30-AA	2	1	3 1/4	2 3/4	1/2
VBP200-125-20-AA	VBP200-125-30-AA	2	1-1/4	3 1/4	3	1/2
VBP200-150-20-AA	VBP200-150-30-AA	2	1-1/2	3 1/4	3	1/2
VBP200-200-20-AA	VBP200-200-30-AA	2	2	3 1/4	3 1/4	1/2
VBP250-100-20-AA	VBP250-100-30-AA	2-1/2	1	3 1/4	2 3/4	1/2
VBP250-125-20-AA	VBP250-125-30-AA	2-1/2	1-1/4	3 1/4	3	1/2
VBP250-150-20-AA	VBP250-150-30-AA	2-1/2	1-1/2	3 1/4	3	1/2
VBP250-200-20-AA	VBP250-200-30-AA	2-1/2	2	3 1/4	3 1/4	1/2

© 2011, AFL, all rights reserved. PP-3-00517, Revision 2, 9.5.18
Specifications are subject to change without notice.

DOSSERT®

TYPE VBP-20-AA, VBP-30-AA

20 Degree and 30 Degree Vee Connection

Ordering Information

CATALOG NUMBER		SPS		DIMENSIONS IN INCHES		BOLT SIZE
A = 20 DEGREE	A = 30 DEGREE	RUN	TAP	B	D	
VBP250-250-20-AA	VBP250-250-30-AA	2 1/2	2 1/2	3 1/4	3 1/4	1/2
VBP300-100-20-AA	VBP300-100-30-AA	3	1	3 1/4	2 3/4	1/2
VBP300-125-20-AA	VBP300-125-30-AA	3	1 1/4	3 1/4	3	1/2
VBP300-150-20-AA	VBP300-150-30-AA	3	1 1/2	3 1/4	3	1/2
VBP300-200-20-AA	VBP300-200-30-AA	3	2	3 1/4	3 1/4	1/2
VBP300-250-20-AA	VBP300-250-30-AA	3	2 1/2	3 1/4	3 1/4	1/2
VBP300-300-20-AA	VBP300-300-30-AA	3	3	3 3/4	3 3/4	5/8
VBP350-100-20-AA	VBP350-100-30-AA	3 1/2	1	3 1/4	2 3/4	1/2
VBP350-125-20-AA	VBP350-125-30-AA	3 1/2	1 1/4	3 1/4	3	1/2
VBP350-150-20-AA	VBP350-150-30-AA	3 1/2	1 1/2	3 1/4	3	1/2
VBP350-200-20-AA	VBP350-200-30-AA	3 1/2	2	3 1/4	3 1/4	1/2
VBP350-250-20-AA	VBP350-250-30-AA	3 1/2	2 1/2	3 1/4	3 1/4	1/2
VBP350-300-20-AA	VBP350-300-30-AA	3 1/2	3	3 3/4	3 3/4	5/8
VBP400-125-20-AA	VBP400-125-30-AA	4	1 1/4	3 1/4	3	1/2
VBP400-150-20-AA	VBP400-150-30-AA	4	1 1/2	3 1/4	3	1/2
VBP400-200-20-AA	VBP400-200-30-AA	4	2	3 1/4	3 1/4	1/2
VBP400-250-20-AA	VBP400-250-30-AA	4	2 1/2	3 1/4	3 1/4	1/2
VBP400-300-20-AA	VBP400-300-30-AA	4	3	3 3/4	3 3/4	5/8
VBP400-400-20-AA	VBP400-400-30-AA	4	4	3 3/4	3 3/4	5/8
VBP500-150-20-AA	VBP500-150-30-AA	5	1 1/2	3 1/2	3	1/2
VBP500-200-20-AA	VBP500-200-30-AA	5	2	3 1/2	3 1/4	1/2
VBP500-250-20-AA	VBP500-250-30-AA	5	2 1/2	3 1/2	3 1/4	1/2
VBP500-300-20-AA	VBP500-300-30-AA	5	3	3 3/4	3 3/4	5/8
VBP600-300-20-AA	VBP600-300-30-AA	6	3	4	3 3/4	5/8
VBP600-350-20-AA	VBP600-350-30-AA	6	3 1/2	4	3 3/4	5/8
VBP600-400-20-AA	VBP600-400-30-AA	6	4	4	3 3/4	5/8

© 2011, AFL, all rights reserved. PP-3-00517, Revision 2, 9.5.18
Specifications are subject to change without notice.

230 kV Aluminum Bolted Tee & Vee Connectors

DOSSERT®

TYPE CFTL-AA

Cable to Flat Bar Tee Connector

Tee tap is designed to provide terminal connections on side of a cable. Eight clamp bolts insure positive electrical contact. Pad conforms to NEMA standards.

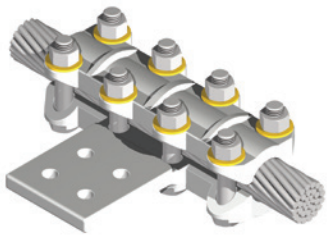

Material

Aluminum Alloy

Hardware

Yellow anodized aluminum bolts, nuts, and lockwashers.

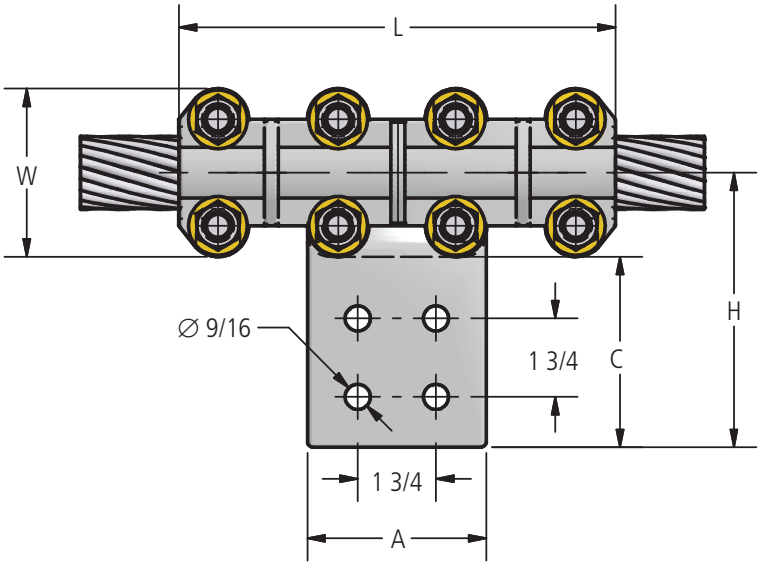

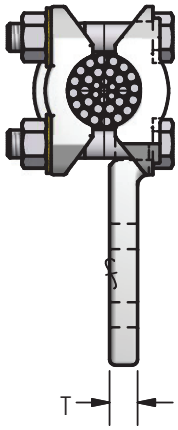

Ordering Information

CATALOG NUMBER	CABLE RANGE				DIMENSIONS IN INCHES						
	AAC		ACSR								
	MIN	MAX	MIN	MAX	A	C	H	L	T	W	BOLT SIZE
CFTL20A-4N-AA	250	336.4	4/0	203.2	3	3	4-1/2	6	3/8	2-15/32	1/2
CFTL34A-4N-AA	350	400	203.2	336.4	3	3	4-1/2	6	3/8	2-5/8	1/2
CFTL60-4N-AA	350	600	336.4	477	3	3	4-3/8	6-3/4	1/2	2-3/4	1/2
CFTL60-4N4-AA	350	600	336.4	477	4	4	5-3/8	6-3/4	1/2	2-3/4	1/2
CFTL64A-4N4-AA	700	900	605	666.6	4	4	5-5/8	8	1/2	2-3/4	1/2
CFTL135-4N4-AA	1192.5	1351.5	1033.5	1192.5	4	4	5-13/16	10	5/8	3-3/32	1/2
CFTL200-4N4-AA	1700	2000	1510.5	1590	4	4	6-1/8	10	5/8	3-3/4	5/8
CFTL250-4N4-AA	2000	2500	1780	2156	4	4	6-1/4	10	3/4	3-15/16	5/8
CFTL300-4N4-AA	2500	3000	2156	2870	4	4	6-5/16	10	3/4	4-1/8	5/8

© 2011, AFL, all rights reserved. PP-3-00281, Revision 1, 10.10.17
Specifications are subject to change without notice.

DOSSERT®
TYPE CASV-AA
Cable Spacer Clamp

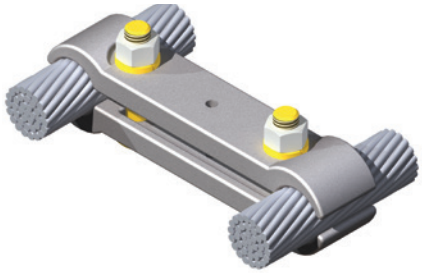

A high strength, high conductivity aluminum cable spacer, the CASV-AA includes clamping hardware made of high-tensile aluminum for dependability and durability in the field.

Material
Aluminum Alloy

Hardware
Yellow anodized aluminum nuts, bolts and lockwashers.

Notes
1. Different sizes not listed can be ordered by contacting customer service.

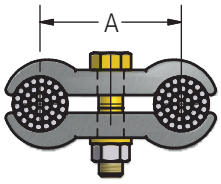

FIG. 1

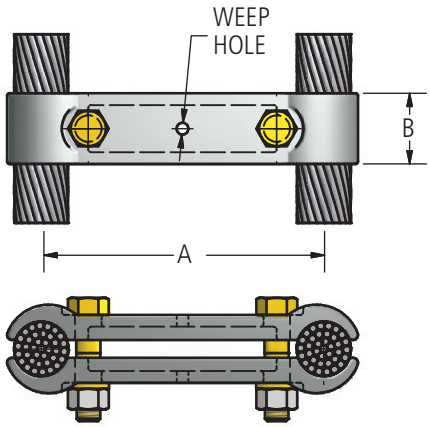

FIG. 2

Ordering Information

CATALOG NUMBER	ALUMINUM CABLE RANGE		ACSR CABLE RANGE		FIG. NO.	DIMENSIONS IN INCHES		BOLT SIZE
	MIN	MAX	MIN	MAX		A	B	
CASV40-8-AA	250 MCM	400 MCM	4/0	397.5	2	8	1 1/2	1/2
CASV60-3-AA	350 MCM	600 MCM	336.4 MCM	477 MCM	1	3	1 1/2	1/2
CASV60-4-AA	350 MCM	600 MCM	336.4 MCM	477 MCM	1	4	1 1/2	1/2
CASV60-6-AA	350 MCM	600 MCM	336.4 MCM	477 MCM	2	6	1 1/2	1/2
CASV60-8-AA	350 MCM	600 MCM	336.4 MCM	477 MCM	2	8	1 1/2	1/2
CASV60-12-AA	350 MCM	600 MCM	336.4 MCM	477 MCM	2	12	1 1/2	1/2
CASV60-13-AA	350 MCM	600 MCM	336.4 MCM	477 MCM	2	13	1 1/2	1/2
CASV60-14-AA	350 MCM	600 MCM	336.4 MCM	477 MCM	2	14	1 1/2	1/2
CASV60-16-AA	350 MCM	600 MCM	336.4 MCM	477 MCM	2	16	1 1/2	1/2
CASV60-18-AA	350 MCM	600 MCM	336.4 MCM	477 MCM	2	18	1 1/2	1/2
CASV90-3-AA	500 MCM	900 MCM	477 MCM	795 MCM	1	3	1 1/2	1/2
CASV90-4-AA	500 MCM	900 MCM	477 MCM	795 MCM	1	4	1 1/2	1/2
CASV90-6-AA	500 MCM	900 MCM	477 MCM	795 MCM	2	6	1 1/2	1/2
CASV90-8-AA	500 MCM	900 MCM	477 MCM	795 MCM	2	8	1 1/2	1/2
CASV90-9-1/2-AA	500 MCM	900 MCM	477 MCM	795 MCM	2	9 1/2	1 1/2	1/2
CASV90-12-AA	500 MCM	900 MCM	477 MCM	795 MCM	2	12	1 1/2	1/2
CASV90-14-AA	500 MCM	900 MCM	477 MCM	795 MCM	2	14	1 1/2	1/2
CASV90-16-AA	500 MCM	900 MCM	477 MCM	795 MCM	2	16	1 1/2	1/2
CASV90-18-AA	500 MCM	900 MCM	477 MCM	795 MCM	2	18	1 1/2	1/2

© 2011, AFL, all rights reserved. PP-3-00270, Revision 0, 1.12.11
Specifications are subject to change without notice.

DOSSERT®

TYPE CASV-AA

Cable Spacer Clamp

Ordering Information

CATALOG NUMBER	ALUMINUM CABLE RANGE		ACSR CABLE RANGE		FIG. NO.	DIMENSIONS IN INCHES		BOLT SIZE
	MIN	MAX	MIN	MAX		A	B	
CASV125-3-AA	900 MCM	1250 MCM	715.5 MCM	1113 MCM	1	3	1 1/2	1/2
CASV125-4-AA	900 MCM	1250 MCM	715.5 MCM	1113 MCM	1	4	1 1/2	1/2
CASV125-6-AA	900 MCM	1250 MCM	715.5 MCM	1113 MCM	2	6	1 1/2	1/2
CASV125-6-1/2-AA	900 MCM	1250 MCM	715.5 MCM	1113 MCM	2	6 1/2	1 1/2	1/2
CASV125-8-AA	900 MCM	1250 MCM	715.5 MCM	1113 MCM	2	8	1 1/2	1/2
CASV125-12-AA	900 MCM	1250 MCM	715.5 MCM	1113 MCM	2	12	1 1/2	1/2
CASV125-13-AA	900 MCM	1250 MCM	715.5 MCM	1113 MCM	2	13	1 1/2	1/2
CASV125-14-AA	900 MCM	1250 MCM	715.5 MCM	1113 MCM	2	14	1 1/2	1/2
CASV125-16-AA	900 MCM	1250 MCM	715.5 MCM	1113 MCM	2	16	1 1/2	1/2
CASV125-18-AA	900 MCM	1250 MCM	715.5 MCM	1113 MCM	2	18	2 1/8	5/8
CASV160-3-AA	1250 MCM	1600 MCM	1113 MCM	1431 MCM	1	3	2 1/8	5/8
CASV160-4-AA	1250 MCM	1600 MCM	1113 MCM	1431 MCM	1	4	2 1/8	5/8
CASV160-6-AA	1250 MCM	1600 MCM	1113 MCM	1431 MCM	2	6	2 1/8	5/8
CASV160-8-AA	1250 MCM	1600 MCM	1113 MCM	1431 MCM	2	8	2 1/8	5/8
CASV160-12-AA	1250 MCM	1600 MCM	1113 MCM	1431 MCM	2	12	2 1/8	5/8
CASV160-14-AA	1250 MCM	1600 MCM	1113 MCM	1431 MCM	2	14	2 1/8	5/8
CASV160-16-AA	1250 MCM	1600 MCM	1113 MCM	1431 MCM	2	16	2 1/8	5/8
CASV160-18-AA	1250 MCM	1600 MCM	1113 MCM	1431 MCM	2	18	2 1/8	5/8
CASV200-3-AA	1500 MCM	2000 MCM	1272 MCM	1780 MCM	1	3	2 1/8	5/8
CASV200-4-AA	1500 MCM	2000 MCM	1272 MCM	1780 MCM	2	4	2 1/8	5/8
CASV200-5-AA	1500 MCM	2000 MCM	1272 MCM	1780 MCM	2	5	2 1/8	5/8
CASV200-6-AA	1500 MCM	2000 MCM	1272 MCM	1780 MCM	2	6	2 1/8	5/8
CASV200-8-AA	1500 MCM	2000 MCM	1272 MCM	1780 MCM	2	8	2 1/8	5/8
CASV200-12-AA	1500 MCM	2000 MCM	1272 MCM	1780 MCM	2	12	2 1/8	5/8
CASV200-14-AA	1500 MCM	2000 MCM	1272 MCM	1780 MCM	2	14	2 1/8	5/8
CASV200-15-AA	1500 MCM	2000 MCM	1272 MCM	1780 MCM	2	15	2 1/8	5/8
CASV200-16-AA	1500 MCM	2000 MCM	1272 MCM	1780 MCM	2	16	2 1/8	5/8
CASV200-18-AA	1500 MCM	2000 MCM	1272 MCM	1780 MCM	2	18	2 1/8	5/8
CASV250-3-AA	2000 MCM	2500 MCM	1780 MCM	2312 MCM	1	3	2 1/8	5/8
CASV250-4-AA	2000 MCM	2500 MCM	1780 MCM	2312 MCM	1	4	2 1/8	5/8
CASV250-6-AA	2000 MCM	2500 MCM	1780 MCM	2312 MCM	2	6	2 1/8	5/8
CASV250-8-AA	2000 MCM	2500 MCM	1780 MCM	2312 MCM	2	8	2 1/8	5/8
CASV250-12-AA	2000 MCM	2500 MCM	1780 MCM	2312 MCM	2	12	2 1/8	5/8
CASV250-14-AA	2000 MCM	2500 MCM	1780 MCM	2312 MCM	2	14	2 1/8	5/8
CASV250-16-AA	2000 MCM	2500 MCM	1780 MCM	2312 MCM	2	16	2 1/8	5/8
CASV250-18-AA	2000 MCM	2500 MCM	1780 MCM	2312 MCM	2	18	2 1/8	5/8
CASV300-8-AA	2500 MCM	3000 MCM	2300 MCM	2870 MCM	2	8	2 1/8	5/8
CASV300-12-AA	2500 MCM	3000 MCM	2300 MCM	2870 MCM	2	12	2 1/8	5/8
CASV300-14-AA	2500 MCM	3000 MCM	2300 MCM	2870 MCM	2	14	2 1/8	5/8

© 2011, AFL, all rights reserved. PP-3-00270, Revision 0, 1.12.11
Specifications are subject to change without notice.

DOSSERT®

TYPE CASV-N-AA, CASV-N-90-AA

Cable Spacer Clamp with Terminal Pad

Material

Aluminum Alloy

Hardware

Yellow anodized aluminum nuts, bolts and lockwashers.

Notes

For a 90° angle, add -90 Ex: CASV125-6-4N4-90-AA

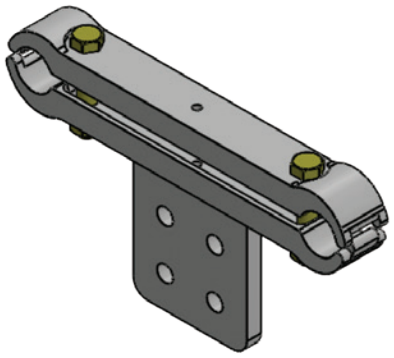

CASV-N-AA

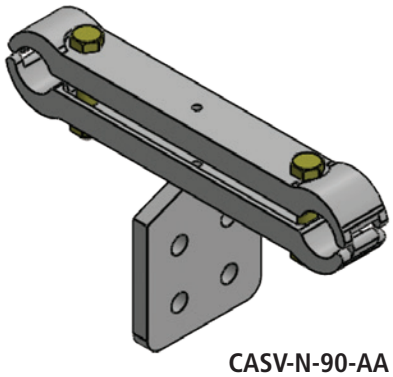

CASV-N-90-AA



CASV-N-AA

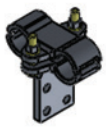

CASV-N-90-AA

FIG. 1

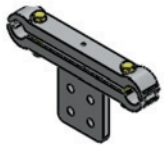

CASV-N-AA

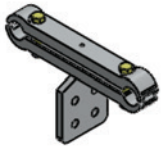

CASV-N-90-AA

FIG. 2

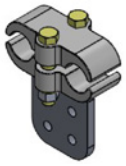

CASV-N-AA

FIG. 3

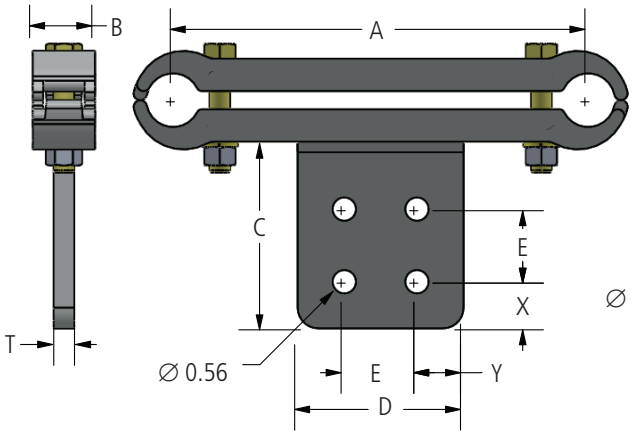

DETAIL 1

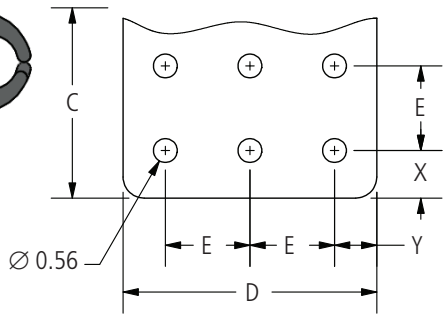

DETAIL 2

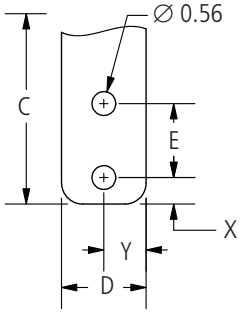

DETAIL 3

continued

© 2011, AFL, all rights reserved. PP-3-00272, Revision 11, 10.17.2022
Specifications are subject to change without notice.

230 kV Aluminum Bolted Cable Spacers

DOSSERT®

TYPE CASV-N-AA, CASV-N-90-AA

Cable Spacer Clamp with Terminal Pad

Ordering Information

CATALOG NUMBER		CABLE RANGE				FIG. NO.	PAD DETAIL	DIMENSIONS IN INCHES								BOLT SIZE
		AAC		ACSR												
CASV-N-AA	CASV-N-90-AA	MIN	MAX	MIN	MAX			A	B	C	D	E	T	X	Y	
CASV40-8-4N-AA	CASV40-8-4N-90-AA	250 MCM	400 MCM	4/0	397.5	2	1	8.00	1.50	4.25	3.00	1.75	0.50	0.63	0.63	1/2
CASV60-4-2N-AA	CASV60-4-2N-90-AA	350 MCM	600 MCM	336.4 MCM	477 MCM	1	3	4.00	1.50	4.25	2.00	1.75	0.50	0.63	1.00	1/2
CASV60-4-4N-AA	CASV60-4-4N-90-AA	350 MCM	600 MCM	336.4 MCM	477 MCM	1	1	4.00	1.50	4.25	3.00	1.75	0.50	0.63	0.63	1/2
CASV60-4-4N4-AA	CASV60-4-4N4-90-AA	350 MCM	600 MCM	336.4 MCM	477 MCM	1	1	4.00	1.50	4.63	4.00	1.75	0.50	1.13	1.13	1/2
CASV60-8-4N-AA	CASV60-8-4N-90-AA	350 MCM	600 MCM	336.4 MCM	477 MCM	2	1	8.00	1.50	4.25	3.00	1.75	0.50	1.13	1.13	1/2
CASV60-8-4N4-AA	CASV60-8-4N4-90-AA	350 MCM	600 MCM	336.4 MCM	477 MCM	2	1	8.00	1.50	5.25	4.00	1.75	0.50	1.13	1.13	1/2
CASV60-10-4N-AA	CASV60-10-4N-90-AA	350 MCM	600 MCM	336.4 MCM	477 MCM	2	1	10.00	1.50	3.50	3.00	1.75	0.50	0.63	0.63	1/2
CASV90-4-4N-AA	CASV90-4-4N-90-AA	500 MCM	900 MCM	477 MCM	795 MCM	1	1	4.00	1.50	4.25	3.00	1.75	0.50	0.63	0.63	1/2
CASV90-4-4N4-AA	CASV90-4-4N4-90-AA	500 MCM	900 MCM	477 MCM	795 MCM	1	1	4.00	1.50	4.25	4.00	1.75	0.50	1.13	1.13	1/2
CASV90-6-4N-AA	CASV90-6-4N-90-AA	500 MCM	900 MCM	477 MCM	795 MCM	2	1	6.00	1.50	4.25	3.00	1.75	0.50	0.63	0.63	1/2
CASV90-6-4N4-AA	CASV90-6-4N4-90-AA	500 MCM	900 MCM	477 MCM	795 MCM	2	1	6.00	1.50	4.25	4.00	1.75	0.50	1.13	1.13	1/2
CASV90-8-4N-AA	CASV90-8-4N-90-AA	500 MCM	900 MCM	477 MCM	795 MCM	2	1	8.00	1.50	3.50	3.00	1.75	0.50	0.63	0.63	1/2
CASV90-8-4N4-AA	CASV90-8-4N4-90-AA	500 MCM	900 MCM	477 MCM	795 MCM	2	1	8.00	1.50	4.50	4.00	1.75	0.50	1.13	1.13	1/2
CASV90-12-4N-AA	CASV90-12-4N-90-AA	500 MCM	900 MCM	477 MCM	795 MCM	2	1	12.00	1.50	3.50	3.00	1.75	0.50	0.63	0.63	1/2
CASV90-12-4N4-AA	CASV90-12-4N4-90-AA	500 MCM	900 MCM	477 MCM	795 MCM	2	1	12.00	1.50	4.50	4.00	1.75	0.50	1.13	1.13	1/2
CASV90-18-4N-AA	CASV90-18-4N-90-AA	500 MCM	900 MCM	477 MCM	795 MCM	2	1	18.00	1.50	3.50	3.00	1.75	0.50	0.63	0.63	1/2
CASV90-18-4N4-AA	CASV90-18-4N4-90-AA	500 MCM	900 MCM	477 MCM	795 MCM	2	1	18.00	1.50	4.50	4.00	1.75	0.50	1.13	1.13	1/2
CASV125-4-2N-AA	CASV125-4-2N-90-AA	900 MCM	1250 MCM	715.5 MCM	1113 MCM	1	3	4.00	1.50	4.25	2.00	1.75	0.50	0.63	1.00	1/2
CASV125-4-4N4-AA	CASV125-4-4N4-90-AA	900 MCM	1250 MCM	715.5 MCM	1113 MCM	1	1	4.00	1.50	4.50	4.00	1.75	0.50	1.13	1.13	1/2
CASV125-6-4N4-AA	CASV125-6-4N4-90-AA	900 MCM	1250 MCM	715.5 MCM	1113 MCM	2	1	6.00	1.50	4.25	4.00	1.75	0.50	1.13	1.13	1/2
CASV125-8-4N4-AA	CASV125-8-4N4-90-AA	900 MCM	1250 MCM	715.5 MCM	1113 MCM	2	1	8.00	1.50	4.50	4.00	1.75	0.50	1.13	1.13	1/2
CASV125-12-4N-AA	CASV125-12-4N-90-AA	900 MCM	1250 MCM	715.5 MCM	1113 MCM	2	1	12.00	1.50	3.44	3.00	1.75	0.50	0.63	0.63	1/2
CASV125-12-4N4-AA	CASV125-12-4N4-90-AA	900 MCM	1250 MCM	715.5 MCM	1113 MCM	2	1	12.00	1.50	4.50	4.00	1.75	0.50	1.13	1.13	1/2
CASV125-18-4N4-AA	CASV125-18-4N4-90-AA	900 MCM	1250 MCM	715.5 MCM	1113 MCM	2	1	18.00	1.50	4.50	4.00	1.75	0.50	1.13	1.13	1/2
CASV160-4-2N-AA	CASV160-4-2N-90-AA	1250 MCM	1600 MCM	1113 MCM	1431 MCM	1	3	4.00	2.13	4.25	2.00	1.75	0.50	0.63	1.00	5/8
CASV160-4-4N-AA	CASV160-4-4N-90-AA	1250 MCM	1600 MCM	1113 MCM	1431 MCM	1	1	4.00	2.13	4.25	3.00	1.75	0.50	0.63	0.63	5/8
CASV160-4-4N4-AA	CASV160-4-4N4-90-AA	1250 MCM	1600 MCM	1113 MCM	1431 MCM	1	1	4.00	2.13	4.50	4.00	1.75	0.50	1.13	1.13	5/8
CASV160-6-4N-AA	CASV160-6-4N-90-AA	1250 MCM	1600 MCM	1113 MCM	1431 MCM	2	1	6.00	2.13	4.25	3.00	1.75	0.50	0.63	0.63	5/8
CASV160-6-4N4-AA	CASV160-6-4N4-90-AA	1250 MCM	1600 MCM	1113 MCM	1431 MCM	2	1	6.00	2.13	5.25	4.00	1.75	0.50	1.13	1.13	5/8
CASV160-8-4N4-AA	CASV160-8-4N4-90-AA	1250 MCM	1600 MCM	1113 MCM	1431 MCM	2	1	8.00	2.13	5.25	4.00	1.75	0.50	1.13	1.13	5/8
CASV160-12-4N4-AA	CASV160-12-4N4-90-AA	1250 MCM	1600 MCM	1113 MCM	1431 MCM	2	1	12.00	2.13	4.50	4.00	1.75	0.50	1.13	1.13	5/8
CASV160-18-4N4-AA	CASV160-18-4N4-90-AA	1250 MCM	1600 MCM	1113 MCM	1431 MCM	2	1	18.00	2.13	4.50	4.00	1.75	0.50	1.13	1.13	5/8
CASV200-4-2N-AA	CASV200-4-2N-90-AA	1500 MCM	2000 MCM	1272 MCM	1780 MCM	2	3	4.00	2.13	4.25	2.00	1.75	0.50	0.63	1.00	5/8
CASV200-4-4N-AA*	CASV200-4-4N-90-AA	1500 MCM	2000 MCM	1272 MCM	1780 MCM	1	1	4.00	2.13	3.50	3.00	1.75	0.50	0.63	0.63	5/8
CASV200-4-4N4-AA*	CASV200-4-4N4-90-AA	1500 MCM	2000 MCM	1272 MCM	1780 MCM	1	1	4.00	2.13	4.50	4.00	1.75	0.50	1.13	1.13	5/8
CASV200-5-4N4-AA	CASV200-5-4N4-90-AA	1500 MCM	2000 MCM	1272 MCM	1780 MCM	2	1	5.00	2.13	5.25	4.00	1.75	0.50	1.13	1.13	5/8
CASV200-6-4N-AA	CASV200-6-4N-90-AA	1500 MCM	2000 MCM	1272 MCM	1780 MCM	2	1	6.00	2.13	4.25	3.00	1.75	0.50	0.63	0.63	5/8
CASV200-6-4N4-AA	CASV200-6-4N4-90-AA	1500 MCM	2000 MCM	1272 MCM	1780 MCM	2	1	6.00	2.13	4.50	4.00	1.75	0.50	1.13	1.13	5/8
CASV200-8-4N-AA	CASV200-8-4N-90-AA	1500 MCM	2000 MCM	1272 MCM	1780 MCM	2	1	8.00	2.13	4.50	3.00	1.75	0.50	0.63	0.63	5/8
CASV200-8-4N4-AA	CASV200-8-4N4-90-AA	1500 MCM	2000 MCM	1272 MCM	1780 MCM	2	1	8.00	2.13	4.50	4.00	1.75	0.50	1.13	1.13	5/8
CASV200-12-4N4-AA	CASV200-12-4N4-90-AA	1500 MCM	2000 MCM	1272 MCM	1780 MCM	2	1	12.00	2.13	4.50	4.00	1.75	0.50	1.13	1.13	5/8
CASV200-16-4N4-AA	CASV200-16-4N4-90-AA	1500 MCM	2000 MCM	1272 MCM	1780 MCM	2	1	16.00	2.13	4.50	4.00	1.75	0.50	1.13	1.13	5/8
CASV200-18-4N4-AA	CASV200-18-4N4-90-AA	1500 MCM	2000 MCM	1272 MCM	1780 MCM	2	1	18.00	2.13	4.50	4.00	1.75	0.50	1.13	1.13	5/8
CASV250-4-2N-AA	CASV250-4-2N-90-AA	2000 MCM	2500 MCM	1780 MCM	2312 MCM	1	3	4.00	2.13	4.25	2.00	1.75	0.50	0.63	1.00	5/8
CASV250-4-4N4-AA	CASV250-4-4N4-90-AA	2000 MCM	2500 MCM	1780 MCM	2312 MCM	1	1	4.00	2.13	5.25	4.00	1.75	0.50	1.13	1.13	5/8
CASV250-8-4N-AA	CASV250-8-4N-90-AA	2000 MCM	2500 MCM	1780 MCM	2312 MCM	2	1	8.00	2.13	4.25	3.00	1.75	0.50	0.63	0.63	5/8
CASV250-8-4N4-AA	CASV250-8-4N4-90-AA	2000 MCM	2500 MCM	1780 MCM	2312 MCM	2	1	8.00	2.13	4.50	4.00	1.75	0.50	1.13	1.13	5/8
CASV250-18-4N4-AA	CASV250-18-4N4-90-AA	2000 MCM	2500 MCM	1780 MCM	2312 MCM	2	1	18.00	2.13	4.50	4.00	1.75	0.50	1.13	1.13	5/8
CASV300-8-4N4-AA	CASV300-8-4N4-90-AA	2500 MCM	3000 MCM	2300 MCM	2870 MCM	2	1	8.00	2.13	5.25	4.00	1.75	0.50	1.13	1.13	5/8

* Denotes this item references Figure 3

© 2011, AFL, all rights reserved. PP-3-00272, Revision 11, 10.17.2022
Specifications are subject to change without notice.

DOSSERT®

TYPE CFTV-N-AA

Terminal Lug

Tee connector designed to connect aluminum cables to aluminum pad for flat bolt on connection. Pads conform to NEMA standards.

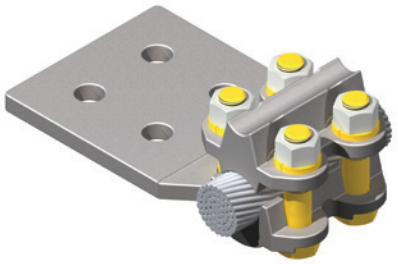

Material

Aluminum Alloy

Hardware

Yellow anodized aluminum nuts, bolts and lockwashers.

Notes

1. For Stainless Steel bolts, lockwashers and Everdur nuts, add "-SSHBN" to catalog number. EX: CTFV160-4N-NN-SSHBN
2. For Grade Five Galvanized Steel Hardware, add "-GS5" to catalog number. EX: CFTV160-4N-AA-GS5

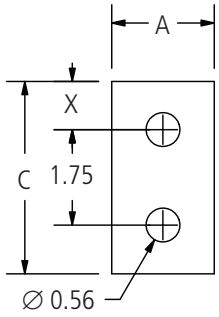

FIG. 2

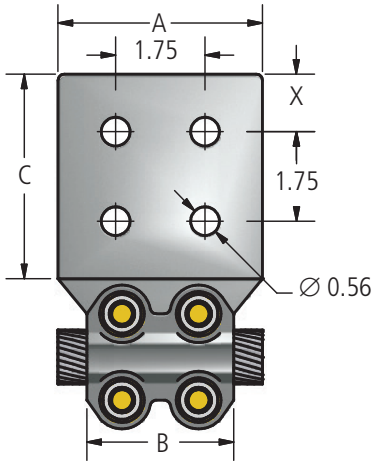

FIG. 1

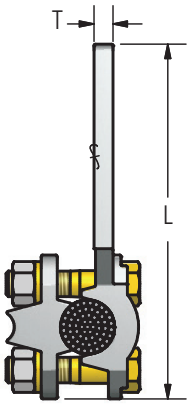

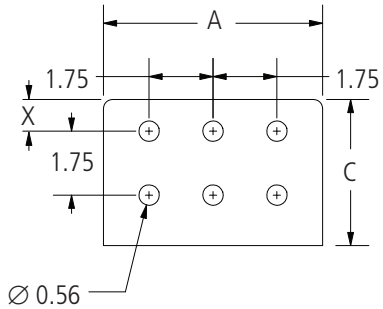

FIG. 3

Ordering Information

CATALOG NUMBER	CABLE RANGE				FIG. NO.	DIMENSIONS IN INCHES						BOLT SIZE
	ALUMINUM		ACSR			A	B	C	L	T	X	
	MIN	MAX	MIN	MAX								
CFTV25-2N-AA	1/0 STR.	250 MCM	1/0	4/0	2	2.00	3.00	3.00	5.63	0.31	0.63	1/2
CFTV25-3N-AA	1/0 STR.	250 MCM	1/0	4/0	1	3.00	3.00	3.00	5.56	0.31	0.63	1/2
CFTV25-4N-AA	1/0 STR.	250 MCM	1/0	4/0	1	4.00	3.00	3.00	5.56	0.31	0.63	1/2
CFTV25-4N4-AA	1/0 STR.	250 MCM	1/0	4/0	1	4.00	3.00	4.00	6.56	0.31	1.13	1/2
CFTV40-2N-AA	250 MCM	400 MCM	4/0	397.5	2	2.00	3.00	3.00	5.63	0.38	0.63	1/2
CFTV40-3N-AA	250 MCM	400 MCM	4/0	397.5	1	3.00	3.00	3.00	5.75	0.38	0.63	1/2
CFTV40-4N-AA	250 MCM	400 MCM	4/0	397.5	1	3.00	3.00	3.00	5.75	0.38	0.63	1/2
CFTV40-4N4-AA	250 MCM	400 MCM	4/0	397.5	1	4.00	3.00	4.00	6.75	0.38	1.13	1/2
CFTV60-2N-AA	350 MCM	600 MCM	336.4	477	2	2.00	3.00	3.00	5.94	0.38	0.63	1/2
CFTV60-3N-AA	350 MCM	600 MCM	336.4	477	1	3.00	3.00	3.00	5.94	0.38	0.63	1/2
CFTV60-4N-AA	350 MCM	600 MCM	336.4	477	1	4.00	3.00	3.00	5.94	0.38	0.63	1/2
CFTV60-4N4-AA	350 MCM	600 MCM	336.4	477	1	4.00	3.00	4.00	6.94	0.38	1.13	1/2
CFTV60-6N4-AA	350 MCM	600 MCM	336.4	477	3	6.00	3.00	4.00	6.94	0.38	1.13	1/2
CFTV90-2N-AA	500 MCM	900 MCM	477	795	2	2.00	3.00	3.00	6.13	0.50	0.63	1/2
CFTV90-3N-AA	500 MCM	900 MCM	477	795	1	3.00	3.00	3.00	6.13	0.50	0.63	1/2
CFTV90-4N-AA	500 MCM	900 MCM	477	795	1	4.00	3.00	3.00	6.63	0.50	0.63	1/2
CFTV90-4N4-AA	500 MCM	900 MCM	477	795	1	4.00	3.00	4.00	7.13	0.50	1.13	1/2
CFTV125-2N-AA	900 MCM	1250 MCM	715	1113	2	2.00	3.25	3.00	6.31	0.50	0.63	1/2
CFTV125-3N-AA	900 MCM	1250 MCM	715	1113	1	3.00	3.25	3.00	6.31	0.50	0.63	1/2

© 2011, AFL, all rights reserved. PP-3-00284, Revision 4, 11.30.18
Specifications are subject to change without notice.

DOSSERT®

TYPE CFTV-N-AA

Terminal Lug

Ordering Information

CATALOG NUMBER	CABLE RANGE				FIG. NO.	DIMENSIONS IN INCHES						BOLT SIZE
	ALUMINUM		ACSR			A	B	C	L	T	X	
	MIN	MAX	MIN	MAX								
CFTV125-4N-AA	900 MCM	1250 MCM	715	1113	1	3.00	3.25	3.00	6.31	0.50	0.63	1/2
CFTV125-4N4-AA	900 MCM	1250 MCM	715	1113	1	4.00	3.25	4.00	7.31	0.50	1.13	1/2
CFTV125-6N4-AA	900 MCM	1250 MCM	715	1113	3	6.00	3.25	4.00	7.31	0.50	1.13	1/2
CFTV160-3N-AA	1250 MCM	1600 MCM	1113	1431	1	3.00	4.38	3.00	6.88	0.56	0.63	5/8
CFTV160-4N-AA	1250 MCM	1600 MCM	1113	1431	1	4.00	4.38	3.00	6.88	0.56	0.63	5/8
CFTV160-4N4-AA	1250 MCM	1600 MCM	1113	1431	1	4.00	4.38	4.00	7.88	0.56	1.13	5/8
CFTV160-6N4-AA	1250 MCM	1600 MCM	1113	1431	3	6.00	4.38	4.00	7.88	0.56	1.13	5/8
CFTV200-2N-AA	1500 MCM	2000 MCM	1272	1780	2	2.00	4.50	3.00	7.00	0.69	0.63	5/8
CFTV200-3N-AA	1500 MCM	2000 MCM	1272	1780	1	3.00	4.50	3.00	7.00	0.69	0.63	5/8
CFTV200-4N-AA	1500 MCM	2000 MCM	1272	1780	1	4.00	4.50	3.00	7.00	0.69	0.63	5/8
CFTV200-4N4-AA	1500 MCM	2000 MCM	1272	1780	1	4.00	4.50	4.00	8.00	0.69	1.13	5/8
CFTV200-6N4-AA	1500 MCM	2000 MCM	1272	1780	3	6.00	4.50	4.00	8.00	0.69	1.13	5/8
CFTV250-2N-AA	2000 MCM	2500 MCM	1780	2300	2	2.00	4.50	3.00	7.19	0.75	0.63	5/8
CFTV250-3N-AA	2000 MCM	2500 MCM	1780	2300	1	3.00	4.50	3.00	7.00	0.69	0.63	5/8
CFTV250-4N-AA	2000 MCM	2500 MCM	1780	2300	1	4.00	4.50	3.00	7.38	0.75	0.63	5/8
CFTV250-4N4-AA	2000 MCM	2500 MCM	1780	2300	1	4.00	4.50	4.00	8.38	0.75	1.13	5/8
CFTV250-6N4-AA	2000 MCM	2500 MCM	1780	2300	3	6.00	4.50	4.00	8.38	0.75	1.13	5/8
CFTV300-4N-AA	2500 MCM	3000 MCM	2300	2870	1	4.00	4.50	3.00	7.56	0.75	0.63	5/8
CFTV300-4N4-AA	2500 MCM	3000 MCM	2300	2870	1	4.00	4.50	4.00	8.56	0.75	1.13	5/8

© 2011, AFL, all rights reserved. PP-3-00284, Revision 4, 11.30.18
Specifications are subject to change without notice.

DOSSERT®

TYPE T3CV-AA

Aluminum Terminal

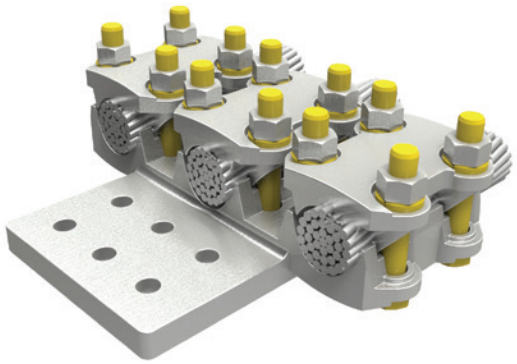

Material

Aluminum Alloy

Material

Aluminum nuts, bolts and lockwashers.

Notes

- For Stainless Steel Hardware, add "-SS" to catalog number. EX: T3CV125-4N4-AA-SS
- For Stainless Steel bolts, lockwashers and Everdur nuts, add "-SSHBN" to catalog number. EX: T3CV125-4N4-AA-SSHBN
- For Galvanized Steel Hardware, add "-GS" to catalog number. EX: T3CV125-4N4-AA-GS
- For Angled Pad, add "A" to prefix and angle to catalog number. EX: T3CVA125-4N4-45-AA

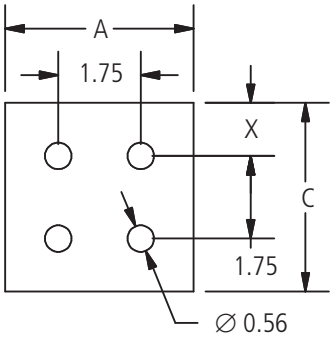

FIG. 1

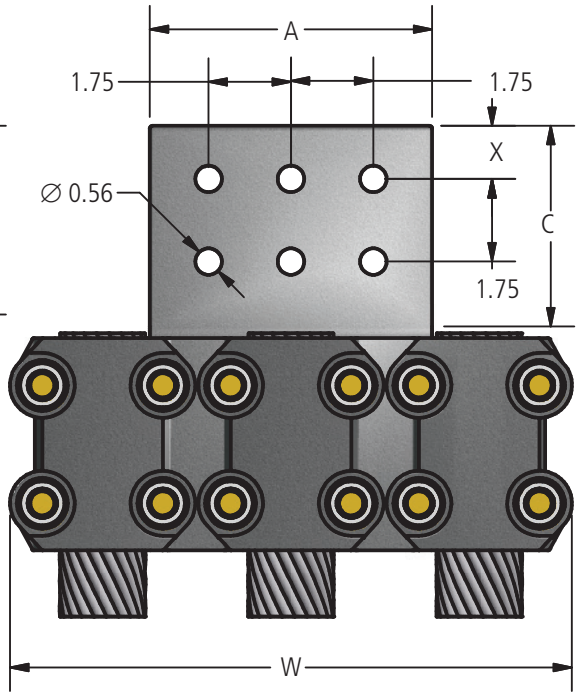

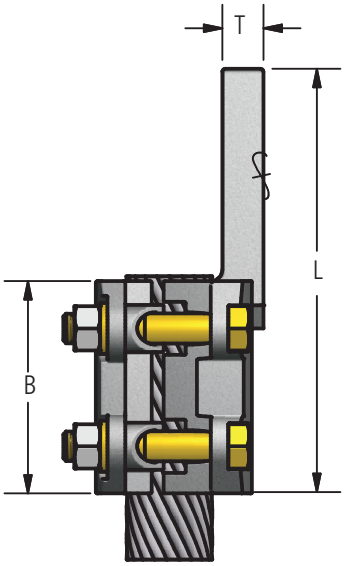

FIG. 2

© 2013, AFL, all rights reserved. PP-3-00468, Revision 2, 3.29.2023
Specifications are subject to change without notice.

DOSSERT®

TYPE T3CV-AA

Aluminum Terminal

Ordering Information

CATALOG NUMBER	CABLE RANGE				FIG. NO.	DIMENSIONS IN INCHES							BOLT SIZE
	ALUMINUM		ACSR										
	MIN	MAX	MIN	MAX		A	B	C	L	T	W	X	
T3CV25-4N-AA	# 1/0	250	# 1/0	#4/0	1	3.00	3.00	3.00	6.25	0.31	7.19	0.63	1/2
T3CV25-4N4-AA	# 1/0	250	# 1/0	#4/0	1	4.00	3.00	4.00	7.25	0.31	7.19	1.13	1/2
T3CV40-4N-AA	250	400	#4/0	397.5	1	3.00	3.00	3.00	6.25	0.38	7.75	0.63	1/2
T3CV40-4N4-AA	250	400	#4/0	397.5	1	4.00	3.00	4.00	7.25	0.38	7.75	1.13	1/2
T3CV60-4N-AA	350	600	336.4	477	1	3.00	3.00	3.00	6.25	0.38	8.63	0.63	1/2
T3CV60-4N4-AA	350	600	336.4	477	1	4.00	3.00	4.00	7.25	0.38	8.63	1.13	1/2
T3CV90-4N-AA	500	900	477	795	1	3.00	3.00	3.00	6.25	0.50	8.88	0.63	1/2
T3CV90-4N4-AA	500	900	477	795	1	4.00	3.00	4.00	7.25	0.75	8.88	1.13	1/2
T3CV90-5N4-AA	500	900	477	795	2	5.00	3.00	4.00	7.25	0.63	8.88	1.13	1/2
T3CV90-6N4-AA	500	900	477	795	2	6.00	3.00	4.00	7.25	0.50	8.88	1.13	1/2
T3CV125-4N-AA	900	1250	715	1113	1	3.00	3.25	3.00	6.50	0.63	9.44	0.63	1/2
T3CV125-4N4-AA	900	1250	715	1113	1	4.00	3.25	4.00	7.50	0.63	9.88	1.13	1/2
T3CV160-4N-AA	1250	1600	1113	1431	1	3.00	4.38	3.00	7.63	0.75	11.13	0.63	5/8
T3CV160-4N4-AA	1250	1600	1113	1431	1	4.00	4.38	4.00	8.75	0.75	11.13	1.13	5/8
T3CV160-6N4-AA	1250	1600	1113	1431	2	6.00	4.38	4.00	8.75	0.75	11.13	1.13	5/8
T3CV200-4N-AA	1500	2000	1272	1780	1	3.00	4.50	3.00	7.75	0.88	11.88	0.63	5/8
T3CV200-4N4-AA	1500	2000	1272	1780	1	4.00	4.50	4.00	8.75	0.88	12.25	1.13	5/8
T3CV200-6N4-AA	1500	2000	1272	1780	2	6.00	4.50	4.00	8.75	0.88	11.88	1.13	5/8
T3CV250-4N-AA	2000	2500	1780	2300	1	3.00	4.50	3.00	7.75	0.88	11.94	0.63	5/8
T3CV250-4N4-AA	2000	2500	1780	2300	1	4.00	4.50	4.00	8.75	0.88	12.06	1.13	5/8
T3CV250-6-4N4-AA	2000	2500	1780	2300	1	4.00	4.50	4.00	8.75	0.88	15.94	1.13	5/8
T3CV250-6N4-AA	2000	2500	1780	2300	2	6.00	4.50	4.00	8.75	0.88	12.06	1.13	5/8

© 2013, AFL, all rights reserved. PP-3-00468, Revision 2, 3.29.2023
Specifications are subject to change without notice.

DOSSERT®

TYPE T2CV-N-AA, T2CVA-N-30-AA, T2CVA-N-45-AA, T2CVA-N-90-AA

Aluminum Terminal for 2 Cables



Terminal is designed to connect stranded aluminum or ACSR conductors to aluminum pads. Pad conforms to NEMA standards. Terminals are designed with a universal groove to accept a wide range of conductor sizes. Captive bolts permit one wrench tightening of nuts.

Material

Aluminum Alloy

Material

Yellow anodized aluminum nuts, bolts and lockwashers.

Notes

- For a 30°, add suffix '-30'; 45°, add suffix '-45'; and 90°, add suffix '-90' to catalog number. Also add 'A' after T2CV. EX: T2CVA25-4N4-90-AA
- For Stainless Steel bolts, lockwashers and Everdur nuts, add "-SSHBN" to catalog number. EX: T2CV200-4N4-AA-SSHBN
- For Galvanized Steel Hardware, add "-GS" to catalog number. EX: T2CV200-4N4-AA-GS
- For Angled Pad, add "A" to prefix and angle to catalog number. EX: T2CVA200-4N4-45-AA

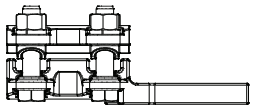

T2CV-N-AA

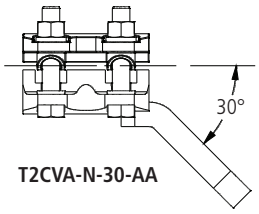

T2CVA-N-30-AA

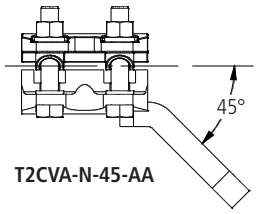

T2CVA-N-45-AA

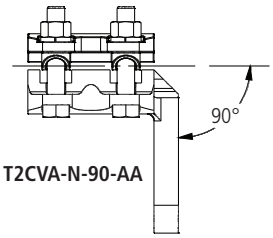

T2CVA-N-90-AA

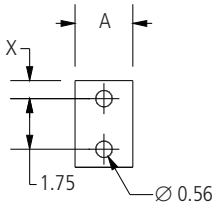

FIG. 1

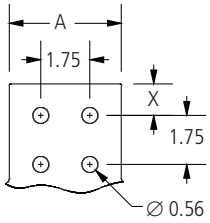

FIG. 2

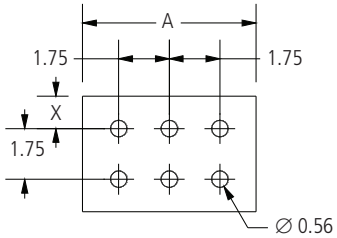

FIG. 3

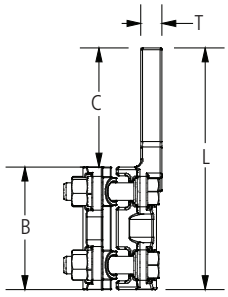

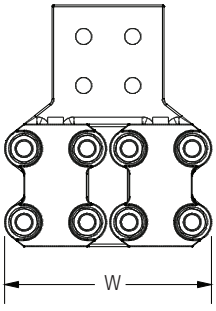

DETAIL A

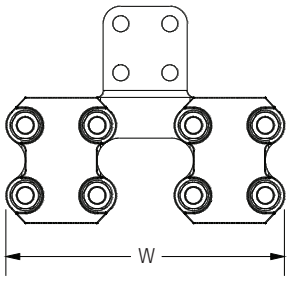

DETAIL B

© 2011, AFL, all rights reserved. PP-3-00470, Revision 3, 6.11.18
Specifications are subject to change without notice.

DOSSERT®

TYPE T2CV-N-AA, T2CVA-N-30-AA, T2CVA-N-45-AA, T2CVA-N-90-AA

Aluminum Terminal for 2 Cables

Ordering Information

CATALOG NO.	CABLE RANGE				FIG. NO.	DETAIL	DIMENSIONS IN INCHES							BOLT SIZE
	AAC		ACSR											
	MIN	MAX	MIN	MAX			A	B	C	L	T	W	X	
T2CV25-4N-AA	# 1/0	250	# 1/0	# 4/0	2	A	3	3	3	6 1/4	5/16	4 3/4	5/8	1/2
T2CVA25-4N-30-AA	# 1/0	250	# 1/0	# 4/0	2	A	3	3	3	6 1/4	5/16	4 3/4	5/8	1/2
T2CVA25-4N-45-AA	# 1/0	250	# 1/0	# 4/0	2	A	3	3	3	6 1/4	5/16	4 3/4	5/8	1/2
T2CVA25-4N-90-AA	# 1/0	250	# 1/0	# 4/0	2	A	3	3	3	6 1/4	5/16	4 3/4	5/8	1/2
T2CV25-4N4-AA	# 1/0	250	# 1/0	# 4/0	2	A	4	3	4	7 1/4	5/16	4 3/4	1 1/8	1/2
T2CVA25-4N4-30-AA	# 1/0	250	# 1/0	# 4/0	2	A	4	3	4	7 1/4	5/16	4 3/4	1 1/8	1/2
T2CVA25-4N4-45-AA	# 1/0	250	# 1/0	# 4/0	2	A	4	3	4	7 1/4	5/16	4 3/4	1 1/8	1/2
T2CVA25-4N4-90-AA	# 1/0	250	# 1/0	# 4/0	2	A	4	3	4	7 1/4	5/16	4 3/4	1 1/8	1/2
T2CV40-4N-AA	250	400	# 4/0	397.5	2	A	3	3	3	6 1/4	7/16	5 1/16	5/8	1/2
T2CVA40-4N-30-AA	250	400	# 4/0	397.5	2	A	3	3	3	6 1/4	7/16	5 1/16	5/8	1/2
T2CVA40-4N-45-AA	250	400	# 4/0	397.5	2	A	3	3	3	6 1/4	7/16	5 1/16	5/8	1/2
T2CVA40-4N-90-AA	250	400	# 4/0	397.5	2	A	3	3	3	6 1/4	7/16	5 1/16	5/8	1/2
T2CV40-4N4-AA	250	400	# 4/0	397.5	2	A	4	3	4	7 1/4	3/8	5 1/16	1 1/8	1/2
T2CVA40-4N4-30-AA	250	400	# 4/0	397.5	2	A	4	3	4	7 1/4	3/8	5 1/16	1 1/8	1/2
T2CVA40-4N4-45-AA	250	400	# 4/0	397.5	2	A	4	3	4	7 1/4	3/8	5 1/16	1 1/8	1/2
T2CVA40-4N4-90-AA	250	400	# 4/0	397.5	2	A	4	3	4	7 1/4	3/8	5 1/16	1 1/8	1/2
T2CV60-4N-AA	350	600	336.4	477	2	A	3	3	3	6 1/4	3/8	5 3/8	5/8	1/2
T2CVA60-4N-30-AA	350	600	336.4	477	2	A	3	3	3	6 1/4	3/8	5 3/8	5/8	1/2
T2CVA60-4N-45-AA	350	600	336.4	477	2	A	3	3	3	6 1/4	3/8	5 3/8	5/8	1/2
T2CVA60-4N-90-AA	350	600	336.4	477	2	A	3	3	3	6 1/4	3/8	5 3/8	5/8	1/2
T2CV60-4N4-AA	350	600	336.4	477	2	A	4	3	4	7 1/4	3/8	5 3/8	1 1/8	1/2
T2CVA60-4N4-30-AA	350	600	336.4	477	2	A	4	3	4	7 1/4	3/8	5 3/8	1 1/8	1/2
T2CVA60-4N4-45-AA	350	600	336.4	477	2	A	4	3	4	7 1/4	3/8	5 3/8	1 1/8	1/2
T2CVA60-4N4-90-AA	350	600	336.4	477	2	A	4	3	4	7 1/4	3/8	5 3/8	1 1/8	1/2
T2CV90-2N-AA	500	900	477	795	1	A	2	3	3	6 1/4	11/16	5 7/8	5/8	1/2
T2CVA90-2N-30-AA	500	900	477	795	1	A	2	3	3	6 1/4	11/16	5 7/8	5/8	1/2
T2CVA90-2N-45-AA	500	900	477	795	1	A	2	3	3	6 1/4	11/16	5 7/8	5/8	1/2
T2CVA90-2N-90-AA	500	900	477	795	1	A	2	3	3	6 1/4	11/16	5 7/8	5/8	1/2
T2CV90-4N-AA	500	900	477	795	2	A	3	3	3	6 1/4	1/2	5 7/8	5/8	1/2
T2CVA90-4N-30-AA	500	900	477	795	2	A	3	3	3	6 1/4	1/2	5 7/8	5/8	1/2
T2CVA90-4N-45-AA	500	900	477	795	2	A	3	3	3	6 1/4	1/2	5 7/8	5/8	1/2
T2CVA90-4N-90-AA	500	900	477	795	2	A	3	3	3	6 1/4	1/2	5 7/8	5/8	1/2
T2CV90-4N4-AA	500	900	477	795	2	A	4	3	4	7 1/4	1/2	5 7/8	1 1/8	1/2
T2CVA90-4N4-30-AA	500	900	477	795	2	A	4	3	4	7 1/4	1/2	5 7/8	1 1/8	1/2
T2CVA90-4N4-45-AA	500	900	477	795	2	A	4	3	4	7 1/4	1/2	5 7/8	1 1/8	1/2
T2CVA90-4N4-90-AA	500	900	477	795	2	A	4	3	4	7 1/4	1/2	5 7/8	1 1/8	1/2
T2CV125-2N-AA	900	1250	715	1192.5	1	A	3	3 1/4	3	6 1/2	5/8	6 1/4	5/8	1/2
T2CVA125-2N-30-AA	900	1250	715	1192.5	1	A	3	3 1/4	3	6 1/2	5/8	6 1/4	5/8	1/2
T2CVA125-2N-45-AA	900	1250	715	1192.5	1	A	3	3 1/4	3	6 1/2	5/8	6 1/4	5/8	1/2
T2CVA125-2N-90-AA	900	1250	715	1192.5	1	A	3	3 1/4	3	6 1/2	5/8	6 1/4	5/8	1/2
T2CV125-4N-AA	900	1250	715	1192.5	2	A	3	3 1/4	3	6 1/2	5/8	6 1/4	5/8	1/2
T2CVA125-4N-30-AA	900	1250	715	1192.5	2	A	3	3 1/4	3	6 1/2	5/8	6 1/4	5/8	1/2
T2CVA125-4N-45-AA	900	1250	715	1192.5	2	A	3	3 1/4	3	6 1/2	5/8	6 1/4	5/8	1/2
T2CVA125-4N-90-AA	900	1250	715	1192.5	2	A	3	3 1/4	3	6 1/2	5/8	6 1/4	5/8	1/2
T2CV125-6-4N-AA	900	1250	715	1192.5	2	B	3	3 1/4	3	6 1/2	11/16	9 1/16	5/8	1/2
T2CVA125-6-4N-30-AA	900	1250	715	1192.5	2	B	3	3 1/4	3	6 1/2	11/16	9 1/16	5/8	1/2
T2CVA125-6-4N-45-AA	900	1250	715	1192.5	2	B	3	3 1/4	3	6 1/2	11/16	9 1/16	5/8	1/2
T2CVA125-6-4N-90-AA	900	1250	715	1192.5	2	B	3	3 1/4	3	6 1/2	11/16	9 1/16	5/8	1/2
T2CV125-4N4-AA	900	1250	715	1192.5	2	A	4	3 1/4	4	7 1/2	5/8	6 1/4	1 1/8	1/2
T2CVA125-4N4-30-AA	900	1250	715	1192.5	2	A	4	3 1/4	4	7 1/2	5/8	6 1/4	1 1/8	1/2
T2CVA125-4N4-45-AA	900	1250	715	1192.5	2	A	4	3 1/4	4	7 1/2	5/8	6 1/4	1 1/8	1/2
T2CVA125-4N4-90-AA	900	1250	715	1192.5	2	A	4	3 1/4	4	7 1/2	5/8	6 1/4	1 1/8	1/2

© 2011, AFL, all rights reserved. PP-3-00470, Revision 3, 6.11.18
Specifications are subject to change without notice.

DOSSERT®

TYPE T2CV-N-AA, T2CVA-N-30-AA, T2CVA-N-45-AA, T2CVA-N-90-AA

Aluminum Terminal for 2 Cables

Ordering Information

CATALOG NO.	CABLE RANGE				FIG. NO.	DETAIL	DIMENSIONS IN INCHES							BOLT SIZE
	AAC		ACSR											
	MIN	MAX	MIN	MAX			A	B	C	L	T	W	X	
T2CV125-6-4N4-AA	900	1250	715	1192.5	2	B	4	3 1/4	4	7 1/2	11/16	9 1/16	1 1/8	1/2
T2CVA125-6-4N4-30-AA	900	1250	715	1192.5	2	B	4	3 1/4	4	7 1/2	11/16	9 1/16	1 1/8	1/2
T2CVA125-6-4N4-45-AA	900	1250	715	1192.5	2	B	4	3 1/4	4	7 1/2	11/16	9 1/16	1 1/8	1/2
T2CVA125-6-4N4-90-AA	900	1250	715	1192.5	2	B	4	3 1/4	4	7 1/2	11/16	9 1/16	1 1/8	1/2
T2CV125-6N4-AA	900	1250	715	1192.5	3	A	6	3 1/4	4	7 1/2	5/8	6 1/4	1 1/8	1/2
T2CV125-6N4-30-AA	900	1250	715	1192.5	3	A	6	3 1/4	4	7 1/2	5/8	6 1/4	1 1/8	1/2
T2CV125-6N4-45-AA	900	1250	715	1192.5	3	A	6	3 1/4	4	7 1/2	5/8	6 1/4	1 1/8	1/2
T2CV125-6N4-90-AA	900	1250	715	1192.5	3	A	6	3 1/4	4	7 1/2	5/8	6 1/4	1 1/8	1/2
T2CV160-4N-AA	1250	1600	1113	1431	2	A	3	4 3/8	3	7 5/8	3/4	7 3/8	5/8	5/8
T2CVA160-4N-30-AA	1250	1600	1113	1431	2	A	3	4 3/8	3	7 5/8	3/4	7 3/8	5/8	5/8
T2CVA160-4N-45-AA	1250	1600	1113	1431	2	A	3	4 3/8	3	7 5/8	3/4	7 3/8	5/8	5/8
T2CVA160-4N-90-AA	1250	1600	1113	1431	2	A	3	4 3/8	3	7 5/8	3/4	7 3/8	5/8	5/8
T2CV160-4N4-AA	1250	1600	1113	1431	2	A	4	4 3/8	4	8 5/8	3/4	7 3/8	1 1/8	5/8
T2CVA160-4N4-30-AA	1250	1600	1113	1431	2	A	4	4 3/8	4	8 5/8	3/4	7 3/8	1 1/8	5/8
T2CVA160-4N4-45-AA	1250	1600	1113	1431	2	A	4	4 3/8	4	8 5/8	3/4	7 3/8	1 1/8	5/8
T2CVA160-4N4-90-AA	1250	1600	1113	1431	2	A	4	4 3/8	4	8 5/8	3/4	7 3/8	1 1/8	5/8
T2CV160-6N4-AA	1250	1600	1113	1431	2	A	6	4 3/8	4	8 5/8	3/4	7 3/8	1 1/8	5/8
T2CVA160-6N4-30-AA	1250	1600	1113	1431	2	A	6	4 3/8	4	8 5/8	3/4	7 3/8	1 1/8	5/8
T2CVA160-6N4-45-AA	1250	1600	1113	1431	2	A	6	4 3/8	4	8 5/8	3/4	7 3/8	1 1/8	5/8
T2CVA160-6N4-90-AA	1250	1600	1113	1431	2	A	6	4 3/8	4	8 5/8	3/4	7 3/8	1 1/8	5/8
T2CV200-4N-AA	1500	2000	1272	1780	2	A	3	4 1/2	3	7 3/4	7/8	7 5/8	5/8	5/8
T2CVA200-4N-30-AA	1500	2000	1272	1780	2	A	3	4 1/2	3	7 3/4	7/8	7 5/8	5/8	5/8
T2CVA200-4N-45-AA	1500	2000	1272	1780	2	A	3	4 1/2	3	7 3/4	7/8	7 5/8	5/8	5/8
T2CVA200-4N-90-AA	1500	2000	1272	1780	2	A	3	4 1/2	3	7 3/4	7/8	7 5/8	5/8	5/8
T2CV200-4N4-AA	1500	2000	1272	1780	2	A	4	4 1/2	4	8 3/4	7/8	7 5/8	1 1/8	5/8
T2CVA200-4N4-30-AA	1500	2000	1272	1780	2	A	4	4 1/2	4	8 3/4	7/8	7 5/8	1 1/8	5/8
T2CVA200-4N4-45-AA	1500	2000	1272	1780	2	A	4	4 1/2	4	8 3/4	7/8	7 5/8	1 1/8	5/8
T2CVA200-4N4-90-AA	1500	2000	1272	1780	2	A	4	4 1/2	4	8 3/4	7/8	7 5/8	1 1/8	5/8
T2CV200-6N4-AA	1500	2000	1272	1780	3	A	6	4 1/2	4	8 3/4	7/8	7 5/8	1 1/8	5/8
T2CVA200-6N4-30-AA	1500	2000	1272	1780	3	A	6	4 1/2	4	8 3/4	7/8	7 5/8	1 1/8	5/8
T2CVA200-6N4-45-AA	1500	2000	1272	1780	3	A	6	4 1/2	4	8 3/4	7/8	7 5/8	1 1/8	5/8
T2CVA200-6N4-90-AA	1500	2000	1272	1780	3	A	6	4 1/2	4	8 3/4	7/8	7 5/8	1 1/8	5/8
T2CV250-4N-AA	2000	2500	1780	2300	2	A	3	4 1/2	3	7 3/4	7/8	8	5/8	5/8
T2CVA250-4N-30-AA	2000	2500	1780	2300	2	A	3	4 1/2	3	7 3/4	7/8	8	5/8	5/8
T2CVA250-4N-45-AA	2000	2500	1780	2300	2	A	3	4 1/2	3	7 3/4	7/8	8	5/8	5/8
T2CVA250-4N-90-AA	2000	2500	1780	2300	2	A	3	4 1/2	3	7 3/4	7/8	8	5/8	5/8
T2CV250-4N4-AA	2000	2500	1780	2300	2	A	4	4 1/2	4	8 3/4	7/8	8	1 1/8	5/8
T2CVA250-4N4-30-AA	2000	2500	1780	2300	2	A	4	4 1/2	4	8 3/4	7/8	8	1 1/8	5/8
T2CVA250-4N4-45-AA	2000	2500	1780	2300	2	A	4	4 1/2	4	8 3/4	7/8	8	1 1/8	5/8
T2CVA250-4N4-90-AA	2000	2500	1780	2300	2	A	4	4 1/2	4	8 3/4	7/8	8	1 1/8	5/8
T2CV250-6N4-AA	2000	2500	1780	2300	3	A	6	4 1/2	4	8 3/4	7/8	8	1 1/8	5/8
T2CVA250-6N4-30-AA	2000	2500	1780	2300	3	A	6	4 1/2	4	8 3/4	7/8	8	1 1/8	5/8
T2CVA250-6N4-45-AA	2000	2500	1780	2300	3	A	6	4 1/2	4	8 3/4	7/8	8	1 1/8	5/8
T2CVA250-6N4-90-AA	2000	2500	1780	2300	3	A	6	4 1/2	4	8 3/4	7/8	8	1 1/8	5/8
T2CV250-6-4N-AA	2000	2500	1780	2300	2	B	3	4 1/2	3	7 3/4	7/8	9 15/16	5/8	5/8
T2CVA250-6-4N-30-AA	2000	2500	1780	2300	2	B	3	4 1/2	3	7 3/4	7/8	9 15/16	5/8	5/8
T2CVA250-6-4N-45-AA	2000	2500	1780	2300	2	B	3	4 1/2	3	7 3/4	7/8	9 15/16	5/8	5/8
T2CVA250-6-4N-90-AA	2000	2500	1780	2300	2	B	3	4 1/2	3	7 3/4	7/8	9 15/16	5/8	5/8
T2CV250-6-4N4-AA	2000	2500	1780	2300	2	B	4	4 1/2	4	8 3/4	7/8	9 15/16	1 1/8	5/8
T2CVA250-6-4N4-30-AA	2000	2500	1780	2300	2	B	4	4 1/2	4	8 3/4	7/8	9 15/16	1 1/8	5/8
T2CVA250-6-4N4-45-AA	2000	2500	1780	2300	2	B	4	4 1/2	4	8 3/4	7/8	9 15/16	1 1/8	5/8
T2CVA250-6-4N4-90-AA	2000	2500	1780	2300	2	B	4	4 1/2	4	8 3/4	7/8	9 15/16	1 1/8	5/8

© 2011, AFL, all rights reserved. PP-3-00470, Revision 3, 6.11.18
Specifications are subject to change without notice.

DOSSERT®

TYPE T2CV-N-AA, T2CVA-N-30-AA, T2CVA-N-45-AA, T2CVA-N-90-AA

Aluminum Terminal for 2 Cables

Ordering Information

CATALOG NO.	CABLE RANGE				FIG. NO.	DETAIL	DIMENSIONS IN INCHES							BOLT SIZE
	AAC		ACSR											
	MIN	MAX	MIN	MAX			A	B	C	L	T	W	X	
T2CV250-6-6N4-AA	2000	2500	1780	2300	3	B	6	4 1/2	4	8 3/4	7/8	9 15/16	1 1/8	5/8
T2CVA250-6-6N4-30-AA	2000	2500	1780	2300	3	B	6	4 1/2	4	8 3/4	7/8	9 15/16	1 1/8	5/8
T2CVA250-6-6N4-45-AA	2000	2500	1780	2300	3	B	6	4 1/2	4	8 3/4	7/8	9 15/16	1 1/8	5/8
T2CVA250-6-6N4-90-AA	2000	2500	1780	2300	3	B	6	4 1/2	4	8 3/4	7/8	9 15/16	1 1/8	5/8
T2CV364-5N4-AA	3000	3640	NA	NA	3	A	5	4 1/2	3	8 3/4	7/8	8 3/4	1 1/8	5/8
T2CVA364-5N4-30-AA	3000	3640	NA	NA	3	A	5	4 1/2	3	8 3/4	7/8	8 3/4	1 1/8	5/8
T2CVA364-5N4-45-AA	3000	3640	NA	NA	3	A	5	4 1/2	3	8 3/4	7/8	8 3/4	1 1/8	5/8
T2CVA364-5N4-90-AA	3000	3640	NA	NA	3	A	5	4 1/2	3	8 3/4	7/8	8 3/4	1 1/8	5/8

© 2011, AFL, all rights reserved. PP-3-00470, Revision 3, 6.11.18
Specifications are subject to change without notice.

DOSSERT®

TYPE TCV-N-AA, TCVA-N-15-AA, TCVA-N-30-AA, TCVA-N-45-AA, TCVA-N-90-AA

NEMA Terminal for Cable Terminal Lug Cable



A variable clamp type terminal for connecting a cable to a flat bar bus. Each size terminal accommodates a wide range of cable sizes. Designed to carry the full rated load of the maximum conductor without overheating. Contact pads other than those listed below can be promptly furnished to any specified size or drilling. The variable type terminal exhibits its advantage in that one connector will accommodate a number of cable sizes. This minimizes greatly the problem of stocking various sizes of connectors and the errors which occur in specifying connectors for specific cable sizes.

Material

Aluminum Alloy

Hardware

Yellow anodized aluminum nuts, bolts and lockwashers

Notes

- For Finished Surface on both sides of pad, add "-F" to catalog number. EX: TCV25-4NF-AA.
- For Contact Surfaces prefilled with Dostex and packaged in Polyethylene Bag, add "-LP" to catalog number. EX: TCV60-2N-AA-LP.
- For Stainless Steel bolts, lockwashers and Everdur nuts, add "-SSHBN" to catalog number. EX: TCV300-6N4-AA-SSHBN.

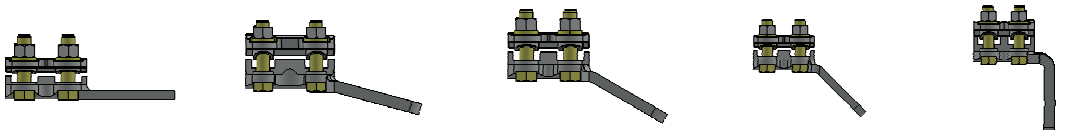

TCV-N-AA | TCVA-N-15-AA | TCVA-N-30-AA | TCVA-N-45-AA | TCVA-N-90-AA

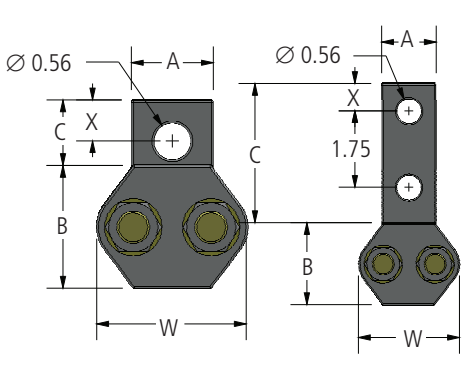

FIG. 1

FIG. 2

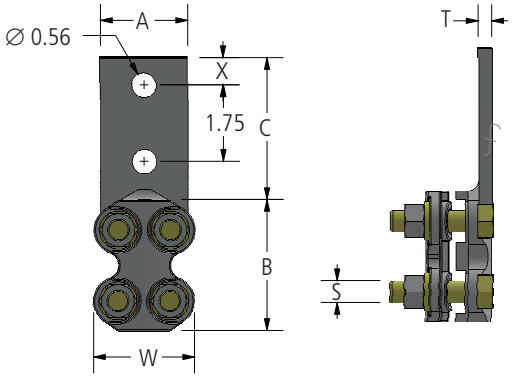

FIG. 3

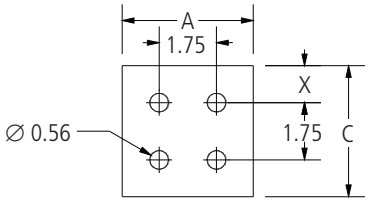

FIG. 4

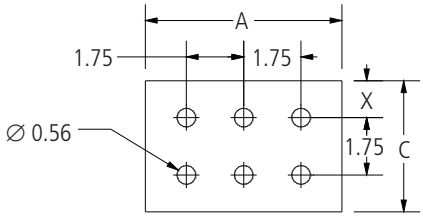

FIG. 5

© 2011, AFL, all rights reserved. PP-3-00473, Revison 6, 4.9.2021
Specifications are subject to change without notice.

DOSSERT®

TYPE TCV-N-AA, TCVA-N-15-AA, TCVA-N-30-AA, TCVA-45-AA, TCVA-90-AA

NEMA Terminal for Cable Terminal Lug Cable

Ordering Information

CATALOG NUMBER	CABLE RANGE				FIG. NO.	DIMENSIONS IN INCHES						
	ALUMINUM		ACSR									
	MIN	MAX	MIN	MAX		A	B	C	W	X	T	S
TCV10-1-AA	#4 STR	1/0 STR	#4	1/0	1	1.50	1.88	1.44	2.31	0.63	0.31	1/2
TCV10-2N-AA	#4 STR	1/0 STR	#4	1/0	2	1.50	1.88	3.25	2.31	0.63	0.31	1/2
TCV25-2N-AA	1/0	250	1/0	4/0	3	1.63	3.00	3.25	2.31	0.63	0.31	1/2
TCV25-4N-AA	1/0	250	1/0	4/0	4	3.00	3.00	3.25	2.31	0.63	0.31	1/2
TCV25-4N4-AA	1/0	250	1/0	4/0	4	4.00	3.00	4.25	2.31	1.13	0.31	1/2
TCV40-2N-AA	250	400	4/0	397.5	3	2.00	3.00	3.25	2.50	0.63	0.38	1/2
TCV40-4N-AA	250	400	4/0	397.5	4	3.00	3.00	3.25	2.50	0.63	0.38	1/2
TCV40-4N4-AA	250	400	4/0	397.5	4	4.00	3.00	4.25	2.50	1.13	0.38	1/2
TCV60-2N3-AA	350	600	336.4	477	3	2.00	3.00	3.38	2.69	0.63	0.38	1/2
TCV60-2N-AA	350	600	336.4	477	3	1.81	3.00	3.25	2.69	0.63	0.38	1/2
TCV60-4N-AA	350	600	336.4	477	4	3.00	3.00	3.38	2.69	0.63	0.38	1/2
TCV60-4N4-AA	350	600	336.4	477	4	4.00	3.00	4.25	2.69	1.13	0.38	1/2
TCV60-6N4-AA	350	600	336.4	477	5	6.00	3.00	4.25	2.69	1.13	0.44	1/2
TCV90-2N-AA	500	900	477	795	3	2.00	3.00	3.25	2.88	0.63	0.50	1/2
TCV90-4N-AA	500	900	477	795	4	3.00	3.00	3.25	2.88	0.63	0.50	1/2
TCV90-4N4-AA	500	900	477	795	4	4.00	3.00	4.25	2.88	1.13	0.50	1/2
TCV125-2N-AA	900	1250	715	1113	3	2.63	3.25	3.25	3.06	0.63	0.50	1/2
TCV125-4N-AA	900	1250	715	1113	4	3.00	3.25	3.25	3.06	0.63	0.50	1/2
TCV125-4N4-AA	900	1250	715	1113	4	4.00	3.25	4.25	3.06	1.13	0.50	1/2
TCV160-2N-AA	1250	1600	1113	1431	3	2.00	4.38	3.25	3.63	0.63	0.56	5/8
TCV160-4N-AA	1250	1600	1113	1431	4	3.00	4.38	3.25	3.63	0.63	0.56	5/8
TCV160-4N4-AA	1250	1600	1113	1431	4	4.00	4.38	4.25	3.63	1.13	0.56	5/8
TCV160-6N4-AA	1250	1600	1113	1431	5	6.00	4.38	4.25	3.63	1.13	0.56	5/8
TCV200-2N-AA	1500	2000	1272	1780	3	2.00	4.50	3.25	3.88	0.63	0.69	5/8
TCV200-4N-AA	1500	2000	1272	1780	4	3.00	4.50	3.25	3.88	0.63	0.69	5/8
TCV200-4N4-AA	1500	2000	1272	1780	4	4.00	4.50	4.25	3.88	1.13	0.69	5/8
TCV200-6N4-AA	1500	2000	1272	1780	5	6.00	4.50	4.25	3.88	1.13	0.69	5/8
TCV250-4N-AA	2000	2500	1780	2300	4	3.00	4.50	3.25	3.94	0.63	0.75	5/8
TCV250-4N4-AA	2000	2500	1780	2300	4	4.00	4.50	4.25	3.94	1.13	0.75	5/8
TCV250-6N4-AA	2000	2500	1780	2300	5	6.00	4.50	4.25	3.94	1.13	0.75	5/8
TCV300-6N4-AA	2500	3000	1780	2870	5	6.00	6.00	4.25	4.13	1.13	1.00	5/8

© 2011, AFL, all rights reserved. PP-3-00473, Revison 6, 4.9.2021
Specifications are subject to change without notice.

DOSSERT®

TYPE TCX-AA
Wide Range Terminal

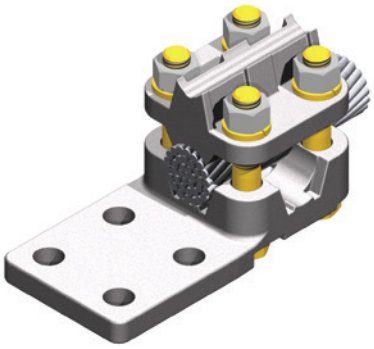

TCX can be used as a cable tap terminal or a straight terminal. A variable clamp type terminal or tap for connecting a cable or pipe to a flat bar bus. Each size accommodates a wide range of cable sizes. New terminal series reduces stock with extended range taking capabilities. Excellent for use due to storm damage. Three terminals provide cable range from #2 solid to 3500 MCM. Available in pad sizes from two-hole to six-hole pads.

Material

Aluminum Alloy

Hardware

Yellow anodized aluminum nuts, bolts and lockwashers.

Notes

- For angled pad, add "A" to prefix and angle to catalog number. EX: TCXA350-4N4-45-AA
- For Grade Five Galvanized Steel Hardware, add "-GS5" to catalog number. EX: TCX350-4N4-AA-GS5

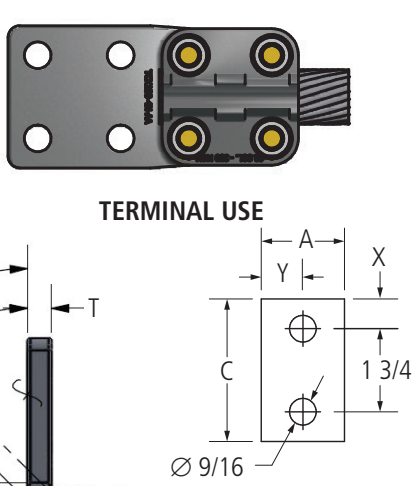

FIG. 1

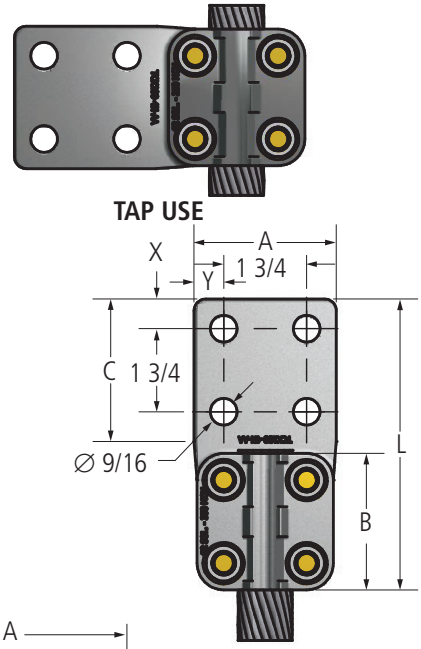

FIG. 2

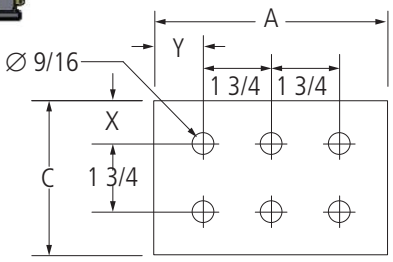

FIG. 3

© 2011, AFL, all rights reserved. PP-3-00475, Revision 5, 8.8.2022
Specifications are subject to change without notice.

230 kV Aluminum Bolted Terminal Connectors

DOSSERT®

TYPE TCX-AA
Wide Range Terminal

Ordering Information

CATALOG NUMBER	FIG. NO.	CONDUCTOR RANGE (AAC)			S.P.S.	DIMENSIONS IN INCHES						
		ACSR OR AAC	RUN OR TAP									
			MIN	MAX	RUN OR TAP	A	B	C	L	T	X	Y
TCX100-2N-AA	1	AAC	#2 SOL.	1000 MCM	3/8 - 3/4	2 1/32	3 1/16	3 1/8	6 7/16	1/2	5/8	1 1/64
		ACSR	4(7/1)	900(36/1)								
TCX100-4N-AA	2	AAC	#2 SOL.	1000 MCM	3/8 - 3/4	3	2 7/8	3	6 1/8	1/2	5/8	5/8
		ACSR	4(7/1)	900(36/1)								
TCX100-4N4-AA	2	AAC	#2 SOL.	1000 MCM	3/8 - 3/4	4	2 7/8	4	7 1/8	1/2	1 1/8	1 1/8
		ACSR	4 (7/1)	900 (36/1)								
TCX100-6NA-AA	3	AAC	#2 SOL.	1000 MCM	3/8 - 3/4	6	2 7/8	4	7 1/8	1/2	1 1/8	1 1/4
		ACSR	4(7/1)	900(36/1)								
TCX200-4N-AA	2	AAC	4/0 STR.	2000 MCM	3/8 - 1 1/4	3	3 3/8	3	6 5/8	11/16	5/8	5/8
		ACSR	4/0(6/1)	1780(84/19)								
TCX200-4N4-AA	2	AAC	4/0 STR.	2000 MCM	3/8 - 1 1/4	4	3 3/8	4	7 5/8	11/16	1 1/8	1 1/8
		ACSR	4/0(6/1)	1780(84/19)								
TCX350-4N4-AA	2	AAC	795 MCM	3500 MCM	–	4	4 1/2	4	9	3/4	1 1/8	1 1/8
		ACSR	795(54/7)	2515(76/19)								
TCX350-6N4-AA	3	AAC	795 MCM	3500 MCM	–	6	4 1/2	4 1/2	9	11/16	1 1/8	1 1/4
		ACSR	795(54/7)	2515(76/19)								

© 2011, AFL, all rights reserved. PP-3-00475, Revision 5, 8.8.2022
Specifications are subject to change without notice.

DOSSERT®

TYPE TP-N-AA, TPA-N-30-AA, TPA-N-45-AA, TPA-N-60-AA, TPA-N-90-AA

Terminal Pipe Lug

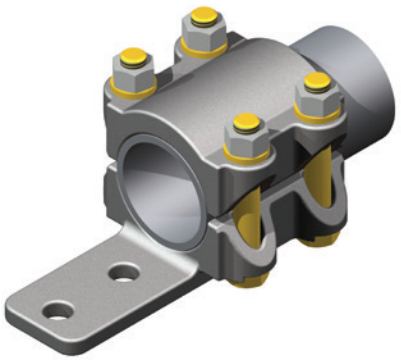

A bolted clamp type terminal for connecting standard pipe size tubular buses to flat surfaces.

Material

Aluminum Alloy

Hardware

Yellow anodized aluminum nuts, bolts and lockwashers.

Notes

- Add an 'A' after TP. For a 30°, add '-30'; for a 45°, add '-45'; for a 60°, add '-60'; for a 90°, add '-90'. For a 1" pipe, with a 2 hole pad, at 45°, order TPA100-2N-45-AA.
- For a finished pad on both sides, add "F" to the end of pad number in catalog number EX: TPA100-2NF-45-AA.
- For contact surfaces coated with NO-OX-ID and packaged in polyethelene bag, add suffix "LP" to end of catalog number. EX: TP200-4N4-AA-LP

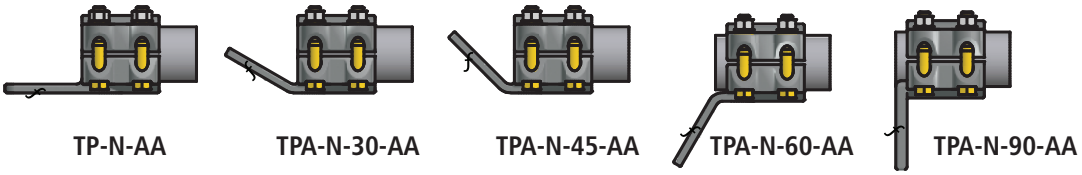

TP-N-AA | TPA-N-30-AA | TPA-N-45-AA | TPA-N-60-AA | TPA-N-90-AA

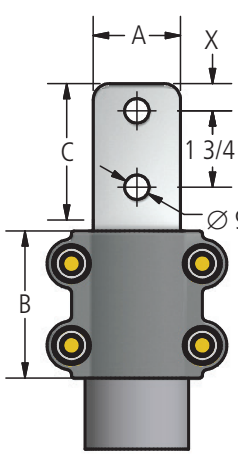

FIG. 1

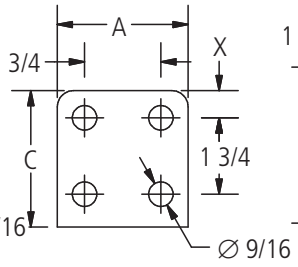

FIG. 2

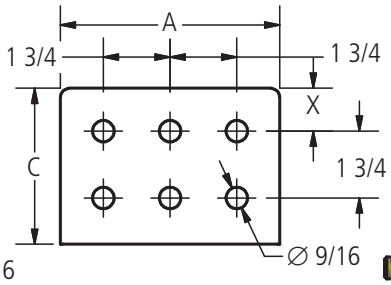

FIG. 3

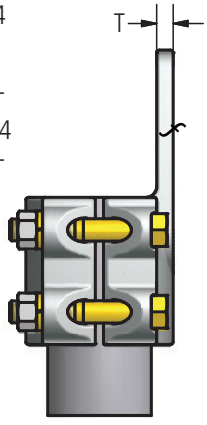

© 2011, AFL, all rights reserved. PP-3-00478, Revision 5, 1.30.19
Specifications are subject to change without notice.

DOSSERT®

TYPE TP-N-AA, TPA-N-30-AA, TPA-N-45-AA, TPA-N-60-AA, TPA-N-90-AA

Terminal Pipe Lug

Ordering Information

CATALOG NUMBER					SPS	FIG. NO.	DIMENSIONS IN INCHES				
STRAIGHT	30 DEGREE	45 DEGREE	60 DEGREE	90 DEGREE			A	B	C	T	X
TP50-2N-AA	TPA50-2N-30-AA	TPA50-2N-45-AA	TPA50-2N-60-AA	TPA50-2N-90-AA	1/2	1	1 1/2	2 1/2	3	3/8	5/8
TP50-4N-AA	TPA50-4N-30-AA	TPA50-4N-45-AA	TPA50-4N-60-AA	TPA50-4N-90-AA	1/2	2	3	2 1/2	3	3/8	5/8
TP75-2N-AA	TPA75-2N-30-AA	TPA75-2N-45-AA	TPA75-2N-60-AA	TPA75-2N-90-AA	3/4	1	1 1/2	2 3/4	3	3/8	5/8
TP75-4N-AA	TPA75-4N-30-AA	TPA75-4N-45-AA	TPA75-4N-60-AA	TPA75-4N-90-AA	3/4	2	3	2 3/4	3	3/8	5/8
TP100-2N-AA	TPA100-2N-30-AA	TPA100-2N-45-AA	TPA100-2N-60-AA	TPA100-2N-90-AA	1	1	1 3/4	2 3/4	3	3/8	5/8
TP100-4N-AA	TPA100-4N-30-AA	TPA100-4N-45-AA	TPA100-4N-60-AA	TPA100-4N-90-AA	1	2	3	2 3/4	3	3/8	5/8
TP125-2N-AA	TPA125-2N-30-AA	TPA125-2N-45-AA	TPA125-2N-60-AA	TPA125-2N-90-AA	1 1/4	1	2	3	3	1/2	5/8
TP125-4N-AA	TPA125-4N-30-AA	TPA125-4N-45-AA	TPA125-4N-60-AA	TPA125-4N-90-AA	1 1/4	2	3	3	3	1/2	5/8
TP125-4N4-AA	TPA125-4N4-30-AA	TPA125-4N4-45-AA	TPA125-4N4-60-AA	TPA125-4N4-90-AA	1 1/4	2	4	3	4	1/2	1 1/8
TP150-2N-AA	TPA150-2N-30-AA	TPA150-2N-45-AA	TPA150-2N-60-AA	TPA150-2N-90-AA	1 1/2	1	2	3	3	1/2	5/8
TP150-4N-AA	TPA150-4N-30-AA	TPA150-4N-45-AA	TPA150-4N-60-AA	TPA150-4N-90-AA	1 1/2	2	3	3	3	1/2	5/8
TP150-4N4-AA	TPA150-4N4-30-AA	TPA150-4N4-45-AA	TPA150-4N4-60-AA	TPA150-4N4-90-AA	1 1/2	2	4	3	4	1/2	1 1/8
TP200-2N-AA	TPA200-2N-30-AA	TPA200-2N-45-AA	TPA200-2N-60-AA	TPA200-2N-90-AA	2	1	2	3 1/4	3	1/2	5/8
TP200-4N-AA	TPA200-4N-30-AA	TPA200-4N-45-AA	TPA200-4N-60-AA	TPA200-4N-90-AA	2	2	3	3 1/4	3	1/2	5/8
TP200-4N4-AA	TPA200-4N4-30-AA	TPA200-4N4-45-AA	TPA200-4N4-60-AA	TPA200-4N4-90-AA	2	2	4	3 1/4	4	1/2	1 1/8
TP250-2N-AA	TPA250-2N-30-AA	TPA250-2N-45-AA	TPA250-2N-60-AA	TPA250-2N-90-AA	2 1/2	1	2	3 1/4	3	5/8	5/8
TP250-4N-AA	TPA250-4N-30-AA	TPA250-4N-45-AA	TPA250-4N-60-AA	TPA250-4N-90-AA	2 1/2	2	3	3 1/4	3	5/8	5/8
TP250-4N4-AA	TPA250-4N4-30-AA	TPA250-4N4-45-AA	TPA250-4N4-60-AA	TPA250-4N4-90-AA	2 1/2	2	4	3 1/4	4	5/8	1 1/8
TP300-4S4-AA	TPA300-4S4-30-AA	TPA300-4S4-45-AA	TPA300-4S4-60-AA	TPA300-4S4-90-AA	3	2	4	3 3/4	4	5/8	1
TP300-2N-AA	TPA300-2N-30-AA	TPA300-2N-45-AA	TPA300-2N-60-AA	TPA300-2N-90-AA	3	1	2	3 3/4	3	5/8	5/8
TP300-4N-AA	TPA300-4N-30-AA	TPA300-4N-45-AA	TPA300-4N-60-AA	TPA300-4N-90-AA	3	2	3	3 3/4	3	5/8	5/8
TP300-4N4-AA	TPA300-4N4-30-AA	TPA300-4N4-45-AA	TPA300-4N4-60-AA	TPA300-4N4-90-AA	3	2	4	3 3/4	4	5/8	1 1/8
TP300-6N4-AA	TPA300-6N4-30-AA	TPA300-6N4-45-AA	TPA300-6N4-60-AA	TPA300-6N4-90-AA	3	3	6	3 3/4	4	5/8	1 1/8
TP350-2N-AA	TPA350-2N-30-AA	TPA350-2N-45-AA	TPA350-2N-60-AA	TPA350-2N-90-AA	3 1/2	1	3	3 1/2	3	3/4	5/8
TP350-4N-AA	TPA350-4N-30-AA	TPA350-4N-45-AA	TPA350-4N-60-AA	TPA350-4N-90-AA	3 1/2	2	3	3 1/2	3	3/4	5/8
TP350-4N4-AA	TPA350-4N4-30-AA	TPA350-4N4-45-AA	TPA350-4N4-60-AA	TPA350-4N4-90-AA	3 1/2	2	4	3 1/2	4	3/4	1 1/8
TP350-6N4-AA	TPA350-6N4-30-AA	TPA350-6N4-45-AA	TPA350-6N4-60-AA	TPA350-6N4-90-AA	3 1/2	3	6	3 1/2	4	3/4	1 1/8
TP400-2N-AA	TPA400-2N-30-AA	TPA400-2N-45-AA	TPA400-2N-60-AA	TPA400-2N-90-AA	4	2	3	3 3/4	3	3/4	5/8
TP400-4N-AA	TPA400-4N-30-AA	TPA400-4N-45-AA	TPA400-4N-60-AA	TPA400-4N-90-AA	4	2	3	3 3/4	3	3/4	5/8
TP400-4N4-AA	TPA400-4N4-30-AA	TPA400-4N4-45-AA	TPA400-4N4-60-AA	TPA400-4N4-90-AA	4	2	4	3 3/4	4	3/4	1 1/8
TP400-6N4-AA	TPA400-6N4-30-AA	TPA400-6N4-45-AA	TPA400-6N4-60-AA	TPA400-6N4-90-AA	4	3	6	3 3/4	4	13/16	1 1/8
TP450-4N4-AA	TPA450-4N4-30-AA	TPA450-4N4-45-AA	TPA450-4N4-60-AA	TPA450-4N4-90-AA	4 1/2	2	4	6	4 1/4	7/8	1 1/8
TP500-4N-AA	TPA500-4N-30-AA	TPA500-4N-45-AA	TPA500-4N-60-AA	TPA500-4N-90-AA	5	2	3	7	3	7/8	5/8
TP500-4N4-AA	TPA500-4N4-30-AA	TPA500-4N4-45-AA	TPA500-4N4-60-AA	TPA500-4N4-90-AA	5	2	4	7	4	1 1/4	1 1/8
TP500-6N4-AA	TPA500-6N4-30-AA	TPA500-6N4-45-AA	TPA500-6N4-60-AA	TPA500-6N4-90-AA	5	3	6	7	4	7/8	1 1/8
TP600-4N4-AA	TPA600-4N4-30-AA	TPA600-4N4-45-AA	TPA600-4N4-60-AA	TPA600-4N4-90-AA	6	2	4	5	4	1 1/4	1 1/8
TP600-6N4-AA	TPA600-6N4-30-AA	TPA600-6N4-45-AA	TPA600-6N4-60-AA	TPA600-6N4-90-AA	6	3	6	5	4	1 1/4	1 1/8
TP800R-6N4-AA	TPA800R-6N4-30-AA	TPA800R-6N4-45-AA	TPA800R-6N4-60-AA	TPA800R-6N4-90-AA	8 O.D.	3	6	5	4	1 1/8	1 1/8

© 2011, AFL, all rights reserved. PP-3-00478, Revision 5, 1.30.19
Specifications are subject to change without notice.

DOSSERT®

TYPE TPC-N-AA
Terminal Connector

Terminal is designed to connect to aluminum or copper pads. Pad conforms to NEMA standards.

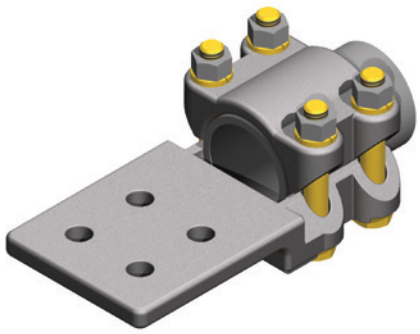

Material

Aluminum Alloy

Hardware

Yellow anodized aluminum nuts, bolts and lockwashers.

Notes

- For Contact surfaces prefilled with AFC and packaged in plyethelene bag, add "-LP" to catalog number. EX: TPC200-4N4-AA-LP
- For Finish on both sides of pad, add "F" to catalog number. EX: TPC200-4N4F-AA
- For Stainless Steel bolts, lockwashers and Everdur nuts, add "-SSHBN" to catalog number. EX: TPC250-4N4-AA-SSHBN
- For Galvanized Steel Hardware, add "-GS" to catalog number. EX: TPC600-4N4-AA-GS

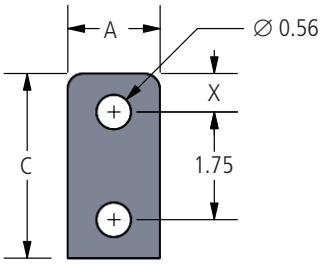

FIG. 1

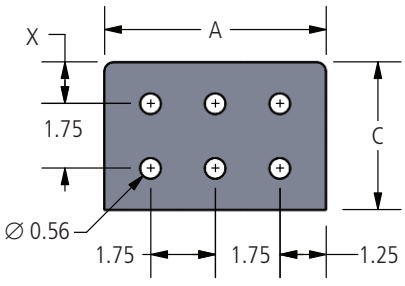

FIG. 3

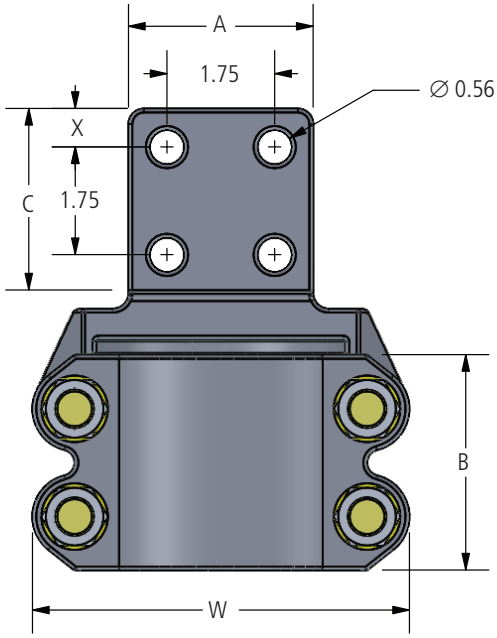

FIG. 2

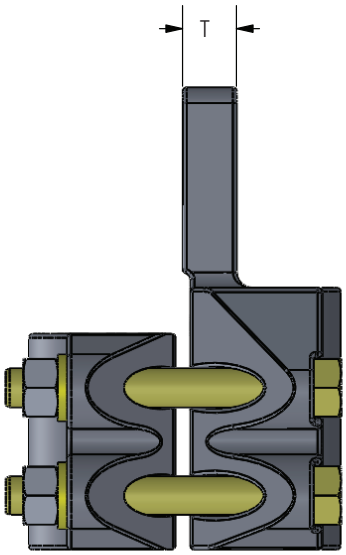

© 2011, AFL, all rights reserved. PP-3-00479, Revision 3, 11.15.2022
Specifications are subject to change without notice.

DOSSERT®

TYPE TPC-N-AA
Terminal Connector

Ordering Information

CATALOG NO	SPS	FIG. NO.	DIMENSIONS IN INCHES						
			A	B	C	T	W	X	BOLT SIZE
TPC75-2N-AA	3/4	1	1.50	2.75	3.00	0.38	2.75	0.63	1/2
TPC75-4N-AA	3/4	2	3.00	2.75	3.00	0.38	2.75	0.63	1/2
TPC100-2N-AA	1	1	2.00	2.75	3.00	0.38	3.07	0.63	1/2
TPC100-4N-AA	1	2	3.00	2.75	3.00	0.38	3.07	0.63	1/2
TPC125-2N-AA	1 1/4	1	2.00	3.00	3.00	0.50	3.45	0.63	1/2
TPC125-4N-AA	1 1/4	2	3.00	3.00	3.00	0.50	3.45	0.63	1/2
TPC125-4N4-AA	1 1/4	2	4.00	3.00	4.00	0.50	3.45	1.13	1/2
TPC150-2N-AA	1 1/2	1	2.00	3.00	3.00	0.50	3.69	0.63	1/2
TPC150-4N-AA	1 1/2	2	3.00	3.00	3.00	0.50	3.69	0.63	1/2
TPC150-4N4-AA	1 1/2	2	4.00	3.00	4.00	0.50	3.69	1.13	1/2
TPC200-2N-AA	2	1	2.00	3.25	3.00	0.63	4.13	0.63	1/2
TPC200-4N-AA	2	2	3.00	3.25	3.00	0.63	4.13	0.63	1/2
TPC200-4N4-AA	2	2	4.00	3.25	4.00	0.63	4.13	1.13	1/2
TPC250-2N-AA	2 1/2	1	2.00	3.25	3.00	0.63	4.63	0.63	1/2
TPC250-4N-AA	2 1/2	2	3.00	3.25	3.00	0.63	4.63	0.63	1/2
TPC250-4N4-AA	2 1/2	2	4.00	3.25	4.00	0.63	4.63	1.13	1/2
TPC300-2N-AA	3	1	2.00	3.75	3.00	0.63	5.63	0.63	5/8
TPC300-3N3-AA	3	2	3.00	3.75	3.00	0.63	5.63	0.63	5/8
TPC300-4N-AA	3	2	4.75	3.75	3.00	0.88	5.63	0.63	5/8
TPC300-4N4-AA	3	2	4.00	3.75	4.00	0.88	5.63	1.13	5/8
TPC350-3N3-AA	3 1/2	2	3.00	3.50	3.00	0.75	6.13	0.63	5/8
TPC350-4N-AA	3 1/2	2	3.00	3.50	3.00	0.88	6.13	0.63	5/8
TPC350-4N4-AA	3 1/2	2	4.00	3.50	4.00	0.75	6.13	1.13	5/8
TPC350-6N4-AA	3 1/2	3	6.00	3.50	4.00	0.75	6.13	1.13	5/8
TPC400-3N3-AA	4	2	3.00	3.75	3.00	0.75	6.63	1.13	5/8
TPC400-4N-AA	4	2	3.00	3.75	3.00	0.75	6.63	0.63	5/8
TPC400-4N4-AA	4	2	4.00	3.75	4.00	0.75	6.63	1.13	5/8
TPC400-5N4-AA	4	3	5.00	3.75	4.00	0.75	6.63	1.13	5/8
TPC400-6N4-AA	4	3	6.00	3.75	4.00	0.75	6.63	1.13	5/8
TPC500-4N4-AA	*5	2	4.00	7.00	4.00	0.88	7.69	1.13	5/8
TPC500-5N4-AA	*5	3	5.00	7.00	4.00	1.00	7.69	1.13	5/8
TPC500-6N4-AA	*5	3	6.00	7.00	4.00	1.00	7.69	1.13	5/8
TPC600-4N-AA	*6	2	3.00	7.00	3.00	1.00	8.76	0.63	5/8
TPC600-4N4-AA	*6	2	4.00	7.00	4.00	1.00	8.76	1.13	5/8
TPC600-6N4-AA	*6	3	6.00	7.00	4.00	1.00	8.76	1.13	5/8

* Supplied with 6 Clamping Bolts

© 2011, AFL, all rights reserved. PP-3-00479, Revision 3, 11.15.2022
Specifications are subject to change without notice.

DOSSERT®

TYPE U2L-N-AA, U2LA-N-45-AA, U2LA-N-90-AA

Aluminum Two Cable U Bolt Terminal

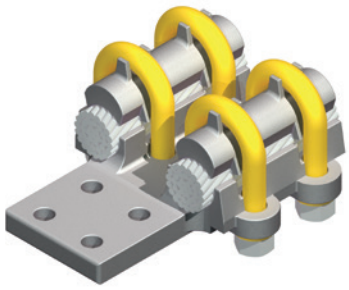

Terminals are designed to connect AAC or ACSR conductors to aluminum pads. Pads conform to NEMA standards. Terminals are designed with universal grooves to accept a wide range of conductor sizes. Captured U-bolts permit one wrench tightening of nuts.

Material

Aluminum Alloy

Hardware

Aluminum U-bolts, lockwashers and nuts.

Notes

1. Contact pads can be furnished to any specification size and hole pattern.

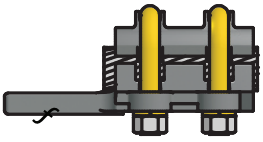

U2L-N-AA

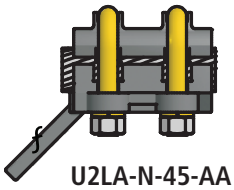

U2LA-N-45-AA

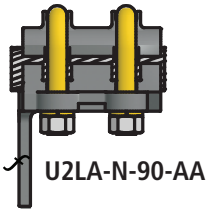

U2LA-N-90-AA

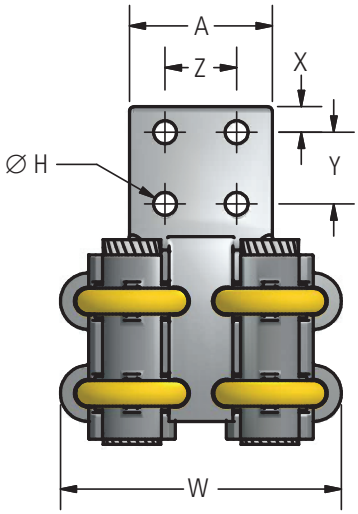

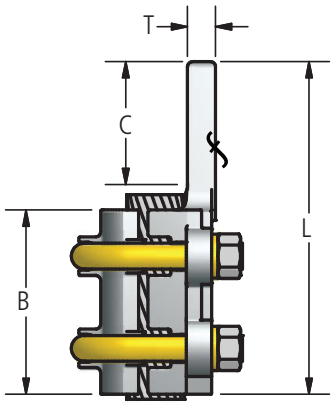

Ordering Information

CATALOG NUMBER			CABLE RANGE		DIMENSIONS IN INCHES									
STRAIGHT	45 DEGREE	90 DEGREE	MIN	MAX	A	B	C	H	L	T	W	X	Y&Z	U-BOLT
U2L30-4N-AA	U2LA30-4N-45-AA	U2LA30-4N-90-AA	1/0	300	3.00	3.25	3.00	0.56	6.38	0.38	4.75	0.63	1.75	1/2
U2L50-4N-AA	U2LA50-4N-45-AA	U2LA50-4N-90-AA	300	500	3.00	3.25	3.00	0.56	6.50	0.38	5.00	0.63	1.75	1/2
U2L50-4N4-AA	U2LA50-4N4-45-AA	U2LA50-4N4-90-AA	300	500	4.00	3.25	4.00	0.56	7.50	0.38	5.00	1.13	1.75	1/2
U2L90-4N-AA	U2LA90-4N-45-AA	U2LA90-4N-90-AA	500	900	3.00	3.50	3.00	0.56	6.75	0.50	5.63	0.63	1.75	1/2
U2L90-4N4-AA	U2LA90-4N4-45-AA	U2LA90-4N4-90-AA	500	900	4.00	3.50	4.00	0.56	7.75	0.50	5.63	1.13	1.75	1/2
U2L100-4N-AA	U2LA100-4N-45-AA	U2LA100-4N-90-AA	750	1000	3.00	3.50	3.00	0.56	6.75	0.50	5.75	0.63	1.75	1/2
U2L100-4N4-AA	U2LA100-4N4-45-AA	U2LA100-4N4-90-AA	750	1000	4.00	3.50	4.00	0.56	7.75	0.50	5.75	1.13	1.75	1/2
U2L150-4N-AA	U2LA150-4N-45-AA	U2LA150-4N-90-AA	1000	1500	3.50	4.50	3.00	0.56	8.00	0.69	6.88	0.63	1.75	5/8
U2L150-4N4-AA	U2LA150-4N4-45-AA	U2LA150-4N4-90-AA	1000	1500	4.00	4.50	4.00	0.56	8.75	0.69	6.88	1.13	1.75	5/8
U2L200-4N4-AA	U2LA200-4N4-45-AA	U2LA200-4N4-90-AA	1500	2000	4.00	4.50	4.00	0.56	9.00	0.69	7.38	1.13	1.75	5/8

© 2011, AFL, all rights reserved. PP-3-00486, Revision 3, 8.7.2020
Specifications are subject to change without notice.

DOSSERT®

TYPE UL-N-AA, ULA-N-45-AA, ULA-N-90-AA

Aluminum U-Bolt Terminal

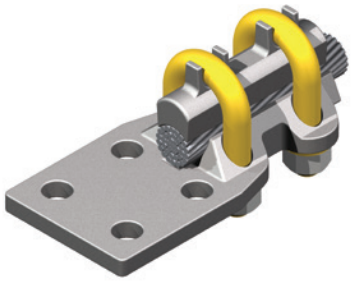

A U-bolt type variable terminal lug for connecting cables to flat bar busses. Designed to operate at cooler than conductor temperatures under maximum load conditions with the largest size cable of the range of cable sizes. Contact pads other than those listed can be promptly furnished to any specified size or drilling.

Material

Aluminum Alloy

Hardware

Aluminum bolts, lockwashers and nuts.

Notes

- For a 900 MCM cable, with a two-hole pad, at a 45° angle, order ULA90-2N-45-AA.
- For a 900 MCM cable, with a two-hole pad, at a 90° angle, order ULA90-2N-90-AA.
- For finished pad on both sides, add "F" to catalog number. EX: ULA90-2NF-90-AA.

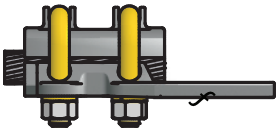

UL-N-AA

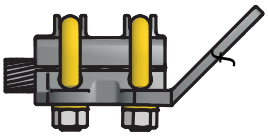

ULA-N-45-AA

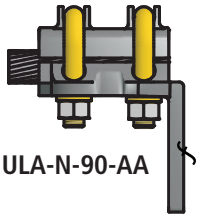

ULA-N-90-AA

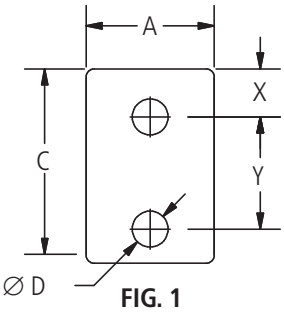

FIG. 1

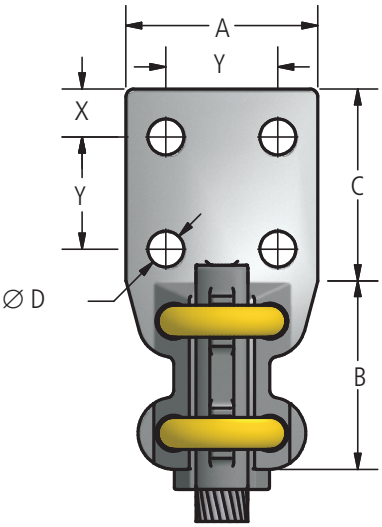

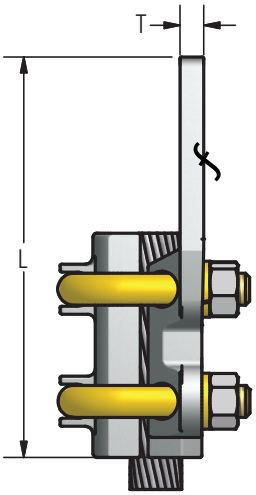

FIG. 2

© 2011, AFL, all rights reserved. PP-3-00502, Revision 6, 1.3.22
Specifications are subject to change without notice.

DOSSERT®

TYPE UL-N-AA, ULA-N-45-AA, ULA-N-90-AA

Aluminum U-Bolt Terminal

Ordering Information

CATALOG NUMBER			CABLE RANGE		FIG. NO.	DIMENSIONS IN INCHES								
STRAIGHT	45 DEGREE	90 DEGREE	MIN	MAX		A	B	C	D	L	T	X	Y	BOLT SIZE
UL13-2N-AA	ULA13-2N-45-AA	ULA13-2N-90-AA	6	#2/0	1	1.50	3.00	3.00	0.56	6.50	0.31	0.63	1.75	1/2
UL13-4N-AA	ULA13-4N-45-AA	ULA13-4N-90-AA	6	#2/0	2	3.00	3.00	3.00	0.56	6.25	0.31	0.63	1.75	1/2
UL21-2-AA	ULA21-2-45-AA	ULA21-2-90-AA	1	#4/0	1	1.25	3.00	2.13	0.44	5.38	0.38	0.50	1.75	1/2
UL21-2N-AA	ULA21-2N-45-AA	ULA21-2N-90-AA	1	#4/0	1	1.50	3.00	3.00	0.56	6.25	0.38	0.63	1.75	1/2
UL21-4N-AA	ULA21-4N-45-AA	ULA21-4N-90-AA	1	#4/0	2	3.00	3.00	3.00	0.56	6.25	0.38	0.63	1.75	1/2
UL21-4N4-AA	ULA21-4N4-45-AA	ULA21-4N4-90-AA	1	#4/0	2	4.00	3.00	4.00	0.56	7.25	0.38	1.13	1.75	1/2
UL30-2N-AA	ULA30-2N-45-AA	ULA30-2N-90-AA	1/0	300	1	1.50	3.25	3.00	0.56	6.50	0.38	0.63	1.75	1/2
UL30-4N-AA	ULA30-4N-45-AA	ULA30-4N-90-AA	1/0	300	2	3.00	3.25	3.00	0.56	6.50	0.38	0.63	1.75	1/2
UL30-4N4-AA	ULA30-4N4-45-AA	ULA30-4N4-90-AA	1/0	300	2	4.00	3.25	4.00	0.56	7.50	0.38	1.13	1.75	1/2
UL50-2N-AA	ULA50-2N-45-AA	ULA50-2N-90-AA	300	500	1	1.75	3.25	3.00	0.56	6.63	0.38	0.63	1.75	1/2
UL50-4N-AA	ULA50-4N-45-AA	ULA50-4N-90-AA	300	500	2	3.00	3.25	3.00	0.56	6.63	0.38	0.63	1.75	1/2
UL50-4N4-AA	ULA50-4N4-45-AA	ULA50-4N4-90-AA	300	500	2	4.00	3.25	4.00	0.56	7.50	0.38	1.13	1.75	1/2
UL60-2N-AA	ULA60-2N-45-AA	ULA60-2N-90-AA	300	600	1	1.75	3.25	3.00	0.56	6.25	0.38	0.63	1.75	1/2
UL90-2N-AA	ULA90-2N-45-AA	ULA90-2N-90-AA	500	900	1	1.75	3.50	3.00	0.56	6.75	0.50	0.63	1.75	1/2
UL90-4N-AA	ULA90-4N-45-AA	ULA90-4N-90-AA	500	900	2	3.00	3.50	3.00	0.56	6.75	0.50	0.63	1.75	1/2
UL90-4N4-AA	ULA90-4N4-45-AA	ULA90-4N4-90-AA	500	900	2	4.00	3.50	4.00	0.56	7.75	0.50	1.13	1.75	1/2
UL100-2N-AA	ULA100-2N-45-AA	ULA100-2N-90-AA	750	1000	1	2.00	3.50	3.00	0.56	6.88	0.50	0.63	1.75	1/2
UL100-4N-AA	ULA100-4N-45-AA	ULA100-4N-90-AA	750	1000	2	3.00	3.50	3.00	0.56	6.88	0.50	0.63	1.75	1/2
UL100-4N4-AA	ULA100-4N4-45-AA	ULA100-4N4-90-AA	750	1000	2	4.00	3.50	4.00	0.56	8.00	0.50	1.13	1.75	1/2
UL127-2N-AA	ULA127-2N-45-AA	ULA127-2N-90-AA	600	1272	1	2.00	3.50	3.00	0.56	6.75	0.63	0.63	1.75	1/2
UL150-2N-AA	ULA150-2N-45-AA	ULA150-2N-90-AA	1000	1500	1	2.00	4.50	3.25	0.56	7.75	0.69	0.63	1.75	5/8
UL150-4N-AA	ULA150-4N-45-AA	ULA150-4N-90-AA	1000	1500	2	3.00	4.50	3.00	0.56	7.75	0.63	0.63	1.75	5/8
UL150-4N4-AA	ULA150-4N4-45-AA	ULA150-4N4-90-AA	1000	1500	2	4.00	4.50	4.00	0.56	8.75	0.63	1.13	1.75	5/8
UL159-4N-AA	ULA159-4N-45-AA	ULA159-4N-90-AA	—	1590	2	3.00	4.50	3.00	0.56	7.75	0.63	0.63	1.75	5/8
UL159-4N4-AA	ULA159-4N4-45-AA	ULA159-4N4-90-AA	—	1590	2	4.00	4.50	4.00	0.56	8.75	0.56	1.13	1.75	5/8
UL200-2N-AA	ULA200-2N-45-AA	ULA200-2N-90-AA	1500	2000	1	2.75	4.50	3.00	0.56	7.75	0.69	0.63	1.75	5/8
UL200-4N-AA	ULA200-4N-45-AA	ULA200-4N-90-AA	1500	2000	2	3.00	4.50	3.00	0.56	7.88	0.69	0.63	1.75	5/8
UL200-4N4-AA	ULA200-4N4-45-AA	ULA200-4N4-90-AA	1500	2000	2	4.00	4.50	4.00	0.56	9.13	0.69	1.13	1.75	5/8
UL200-4S4-AA	ULA200-4S4-45-AA	ULA200-4S4-90-AA	1500	2000	2	4.00	4.50	4.00	0.56	8.75	0.69	1.00	2.00	5/8
UL250-4N-AA	ULA250-4N-45-AA	ULA250-4N-90-AA	2000	2500	2	3.00	4.50	3.00	0.56	7.75	0.75	0.63	1.75	5/8
UL250-4N4-AA	ULA250-4N4-45-AA	ULA250-4N4-90-AA	2000	2500	2	4.00	4.50	4.00	0.56	8.75	0.75	1.13	1.75	5/8

© 2011, AFL, all rights reserved. PP-3-00502, Revision 6, 1.3.22
Specifications are subject to change without notice.

DOSSERT®

TYPE XLW-AA, XLW-90-AA

Expansion Terminal Connector

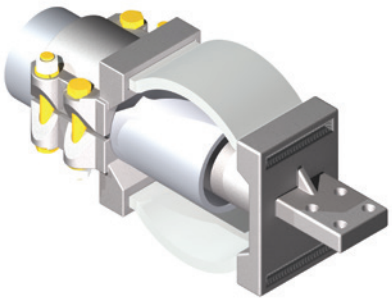

Expansion terminal is designed to compensate for expansion and contraction in bus runs. Pad conforms to NEMA standards.

Material

Aluminum Alloy

Hardware

Aluminum bolts, lockwashers and nuts

Notes

- For an expansion terminal at 90°, add suffix "-90" to catalog number. EX: XLWP125-4N-AA
- To order without alignment guide, add "P" to catalog number. EX: XLWP125-4N-AA
- For schedule 80 pipe, add "E" to catalog number. EX: XLW125E-4N-AA
- For Stainless Steel bolts, lockwashers and Everdur nuts, add "-SSHBN" to catalog number. EX: XLW350-4N4-AA-SSHBN
- For Galvanized Steel Hardware, add "-GS" to catalog number. EX: XLW350-4N4-AA-GS

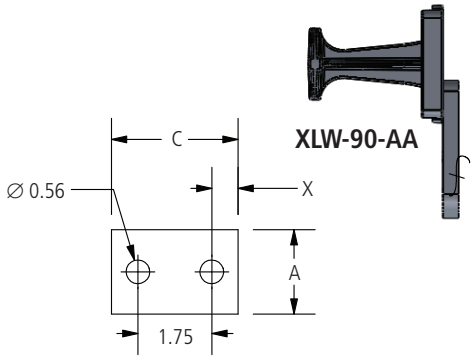

FIG. 1

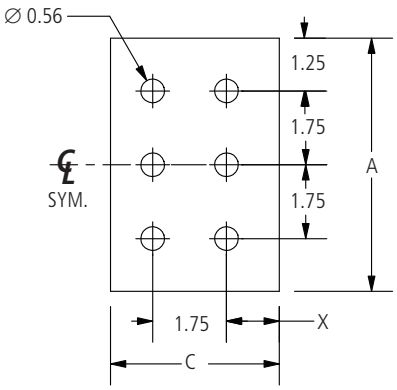

FIG. 3

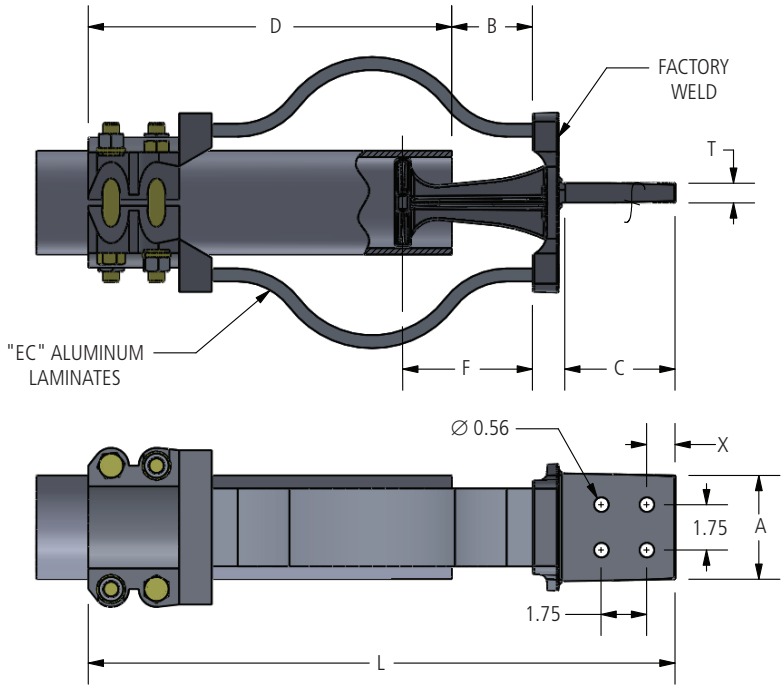

FIG. 2

© 2011, AFL, all rights reserved. PP-3-00595, Revision 4, 12.18.18
Specifications are subject to change without notice.

DOSSERT®

TYPE XLW-AA, XLW-90-AA

Expansion Terminal Connector

Ordering Information

CATALOG NUMBER	FIG. NO.	SPS	DIMENSIONS IN INCHES								BOLT SIZE
			A	B	C	D	F	L	T	X	
XLW100-2N-AA	1	1	2.00	1.50	3.00	7.13	3.50	12.63	0.50	0.63	1/2
XLW100-4N-AA	2	1	3.00	1.50	3.00	7.13	3.50	12.63	0.50	0.63	1/2
XLW125-2N-AA	1	1 1/4	2.00	1.50	3.00	8.25	3.50	13.75	0.50	0.63	1/2
XLW125-4N-AA	2	1 1/4	3.00	1.50	3.00	8.25	3.50	13.75	0.50	0.63	1/2
XLW150-2N-AA	1	1 1/2	2.00	1.50	3.00	8.38	3.50	14.00	0.63	0.63	1/2
XLW150-4N-AA	2	1 1/2	3.00	1.50	3.00	8.38	3.50	14.00	0.63	0.63	1/2
XLW150-4N4-AA	2	1 1/2	4.00	1.50	4.00	8.38	3.50	15.00	0.63	1.13	1/2
XLW200-2N-AA	1	2	2.00	2.50	3.00	9.56	4.50	16.75	0.75	0.63	1/2
XLW200-4N-AA	2	2	3.00	2.50	3.00	9.56	4.50	16.75	0.75	0.63	1/2
XLW200-4N4-AA	2	2	4.00	2.50	4.00	9.56	4.50	17.75	0.75	1.13	1/2
XLW250-2N-AA	1	2 1/2	2.00	2.50	3.00	10.31	4.50	17.50	0.75	0.63	1/2
XLW250-4N-AA	2	2 1/2	3.00	2.50	3.00	10.31	4.50	17.50	0.75	0.63	1/2
XLW250-4N4-AA	2	2 1/2	4.00	2.50	4.00	10.31	4.50	18.50	0.75	1.13	1/2
XLW300-2N-AA	1	3	3.00	2.50	3.00	11.56	4.50	18.75	0.88	0.63	5/8
XLW300-4N-AA	2	3	3.00	2.50	3.00	11.56	4.50	18.75	0.88	0.63	5/8
XLW300-4N4-AA	2	3	4.00	2.50	4.00	11.56	4.50	19.75	0.88	1.13	5/8
XLW350-4N-AA	2	3 1/2	3.00	2.50	3.00	12.56	4.50	20.13	0.88	0.63	5/8
XLW350-4N4-AA	2	3 1/2	4.00	2.50	4.00	12.56	4.50	21.13	0.81	1.13	5/8
XLW350-6N4-AA	3	3 1/2	6.00	2.50	4.00	12.56	4.50	21.13	0.88	1.25	5/8
XLW400-4N-AA	2	4	4.00	2.50	3.00	12.75	4.50	21.75	1.00	0.63	5/8
XLW400-4N4-AA	2	4	4.00	2.50	4.00	12.75	4.50	21.75	1.00	1.13	5/8
XLW400-6N4-AA	3	4	6.00	2.50	4.00	12.75	4.50	21.75	1.00	1.13	5/8
XLW500-4N4-AA	2	5	4.00	2.50	4.00	15.00	4.50	24.00	1.25	1.13	5/8
XLW500-6N4-AA	3	5	6.00	2.50	4.00	15.00	4.50	24.00	1.25	1.25	5/8
XLW600-4N4-AA	2	6	4.00	2.50	4.00	17.00	4.50	26.38	1.38	1.13	5/8
XLW600-6N4-AA	3	6	6.00	2.50	4.00	17.00	4.50	26.38	1.38	1.25	5/8

© 2011, AFL, all rights reserved. PP-3-00595, Revision 4, 12.18.18
Specifications are subject to change without notice.

DOSSERT®

TYPE XLW-90V-AA, XLWO-AA

Expansion Terminal Connector

Expansion terminal is designed to compensate for expansion and contraction in bus runs. Pad conforms to NEMA standards. Dimension "D" shown is for an installation temperature of 68°F(20°C). XLW-90V is the product number for a center-formed pad, XLWO is for an offset pad. Products from factory are for use with Sch. 40 pipe, to order for use with Sch. 80 pipe see notes below.

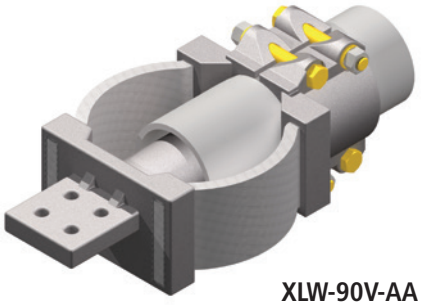

XLW-90V-AA

Material

Aluminum Alloy

Hardware

Yellow anodized aluminum nuts, bolts and lockwashers.

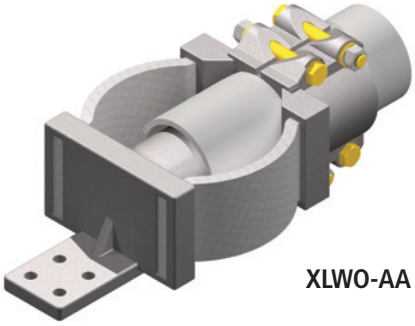

XLWO-AA

Notes

1. Add "P" to catalog number to remove alignment guide.
   EX: XLWP200-4N4-90V-AA or XLWOP200-4N4-AA.

2. Add "E" to the catalog number for extra heavy pipe.
   EX: XLW200E-4N4-90V-AA or XLWO200E-4N4-AA.

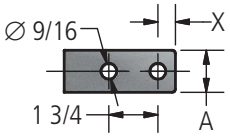

FIG. 1

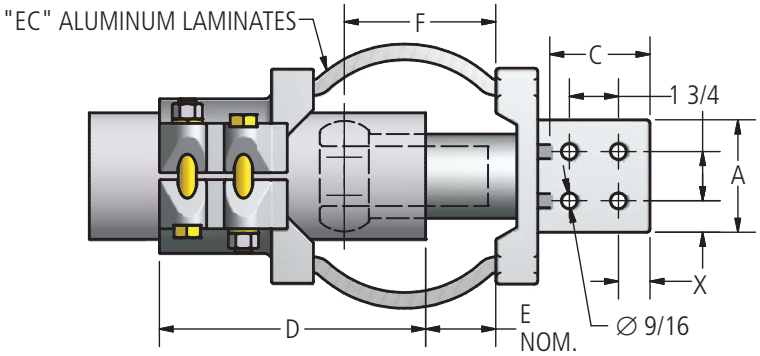

FIG. 2

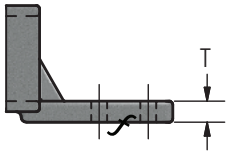

XLWO-AA

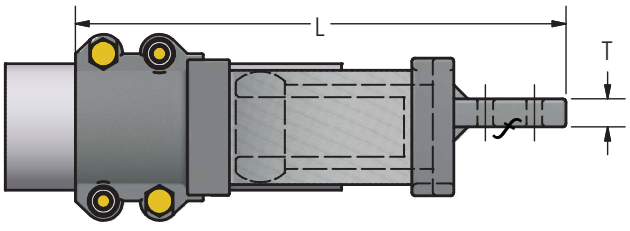

XLW-90V-AA

© 2011, AFL, all rights reserved. PP-3-00594, Revision 1, 7.23.13
Specifications are subject to change without notice.

DOSSERT®

TYPE XLW-90V-AA, XLWO-AA

Expansion Terminal Connector

Ordering Information

CATALOG NUMBER*	CATALOG NUMBER*	SPS	FIG. NO.	DIMENSIONS IN INCHES								
				A	C	D	E	F	L	T	X	BOLT SIZE
XLW100-2N-90V-AA	XLWO100-2N-AA	1	1	2	3	7-1/8	1-1/2	3-1/2	12-5/8	1/2	5/8	1/2
XLW100-4N-90V-AA	XLWO100-4N-AA	1	2	3	3	7-1/8	1-1/2	3-1/2	12-5/8	1/2	5/8	1/2
XLW125-2N-90V-AA	XLWO125-2N-AA	1-1/4	1	2	3	8-1/4	1-1/2	3-1/2	13-3/4	1/2	5/8	1/2
XLW125-4N-90V-AA	XLWO125-4N-AA	1-1/4	2	3	3	8-1/4	1-1/2	3-1/2	13-3/4	1/2	5/8	1/2
XLW150-2N-90V-AA	XLWO150-2N-AA	1-1/2	1	2-1/2	3	8-3/8	1-1/2	3-1/2	14	5/8	5/8	1/2
XLW150-4N-90V-AA	XLWO150-4N-AA	1-1/2	2	3	3	8-3/8	1-1/2	3-1/2	14	5/8	5/8	1/2
XLW150-4N4-90V-AA	XLWO150-4N4-AA	1-1/2	2	4	4	8-3/8	1-1/2	3-1/2	15	5/8	1-1/8	1/2
XLW200-2N-90V-AA	XLWO200-2N-AA	2	1	2-3/4	3	9-9/16	2-1/2	4-1/2	16-3/4	3/4	5/8	1/2
XLW200-4N-90V-AA	XLWO200-4N-AA	2	2	3	3	9-9/16	2-1/2	4-1/2	16-3/4	3/4	5/8	1/2
XLW200-4N4-90V-AA	XLWO200-4N4-AA	2	2	4	4	9-9/16	2-1/2	4-1/2	17-3/4	3/4	1-1/8	1/2
XLW250-2N-90V-AA	XLWO250-2N-AA	2-1/2	1	2-3/4	3	10-5/16	2-1/2	4-1/2	171/2	3/4	5/8	1/2
XLW250-4N-90V-AA	XLWO250-4N-AA	2-1/2	2	3	3	10-5/16	2-1/2	4-1/2	17-1/2	3/4	5/8	1/2
XLW250-4N4-90V-AA	XLWO250-4N4-AA	2-1/2	2	4	4	10-5/16	2-1/2	4-1/2	18-1/2	3/4	1-1/8	1/2
XLW300-4N-90V-AA	XLWO300-4N-AA	3	2	3	3	11-9/16	2-1/2	4-1/2	18-3/4	7/8	5/8	5/8
XLW300-4N4-90V-AA	XLWO300-4N4-AA	3	2	4	4	11-9/16	2-1/2	4-1/2	19-3/4	7/8	1-1/8	5/8
XLW350-4N-90V-AA	XLWO350-4N-AA	3-1/2	2	3	3	12-9/16	2-1/2	4-1/2	20-1/8	7/8	5/8	5/8
XLW350-4N4-90V-AA	XLWO350-4N4-AA	3-1/2	2	4	4	12-9/16	2-1/2	4-1/2	21-1/8	7/8	1-1/8	5/8
XLW400-4N4-90V-AA	XLWO400-4N4-AA	4	2	4	4	12-3/4	2-1/2	4-1/2	21-3/4	1	1-1/8	5/8
XLW500-4N4-90V-AA	XLWO500-4N4-AA	5	2	4	4	15	2-1/2	4-1/2	24	1-1/4	1-1/8	5/8
XLW600-4N4-90V-AA	XLWO600-4N4-AA	6	2	4	4	17	2-1/2	4-1/2	26-3/8	1-3/8	1-1/8	5/8

* See Notes for SCH80 Ordering Information.

© 2011, AFL, all rights reserved. PP-3-00594, Revision 1, 7.23.13
Specifications are subject to change without notice.

DOSSERT®

TYPE BM SERIES

Bi-Metal Transition Plate

The transition plate is for connecting copper and aluminum terminals together.

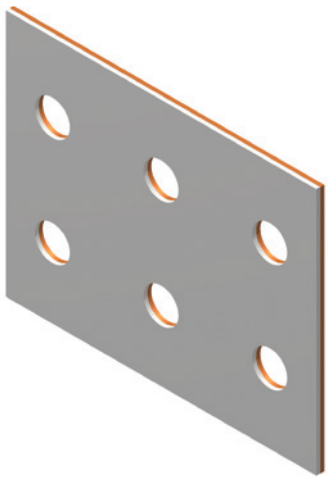

Material

Copper Clad Aluminum

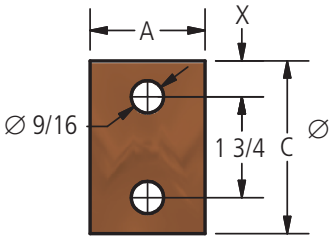

FIG. 1

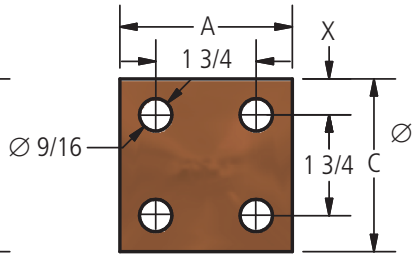

FIG. 2

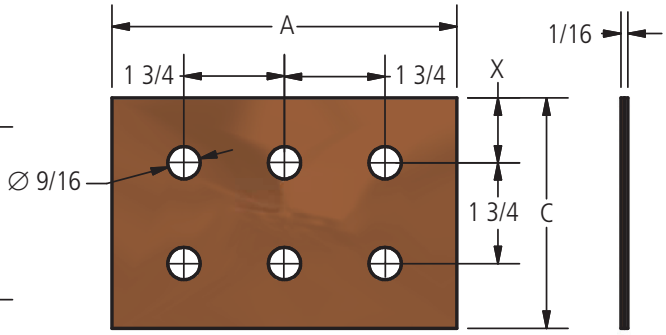

FIG. 3

Ordering Information

CATALOG NUMBER	FIG. NO.	DIMENSIONS IN INCHES		
		A	C	X
BM-1 1/2N	1	1 1/2	3	5/8
BM-2N	1	2	3	5/8
BM 2 3/4 X 5 1/4-2N	1	2 3/4	5 1/4	3/4
BM-3N	2	3	3	5/8
BM-4N4	2	4	4	1 1/8
BM-5N4	3	5	4	1 1/8
BM-6N4	3	6	4	1 1/8

© 2011, AFL, all rights reserved. PP-3-00249, Revision 1, 7.23.13
Specifications are subject to change without notice.

DOSSERT®

TYPE 1706 SERIES

Bus Vibration Dampers



Tubular bus dampers are designed to control Aeolian or wind-induced vibration in long bus spans; the dampers have been proven both in the laboratory and in field service to be the most effective method of controlling tubular bus vibration. The dampers are faster and easier to install than the old method of inserting "scrap" cable into the tubular bus runs. Also, the dampers find applications for correcting a vibration problems in existing substations.

Determine catalog number based on the bus conductor size being used. To order a bus vibration damper for 2 1/2" bus conductor, the complete catalog number is 1706-288.

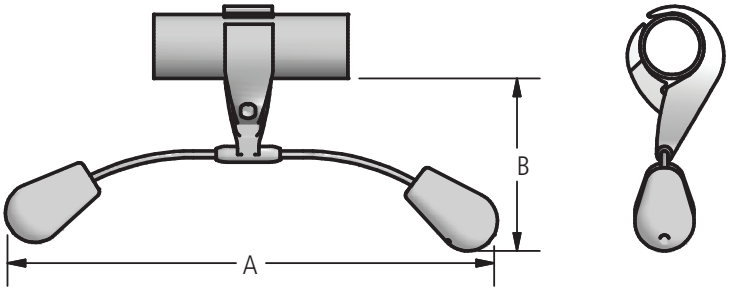

FIG. 1

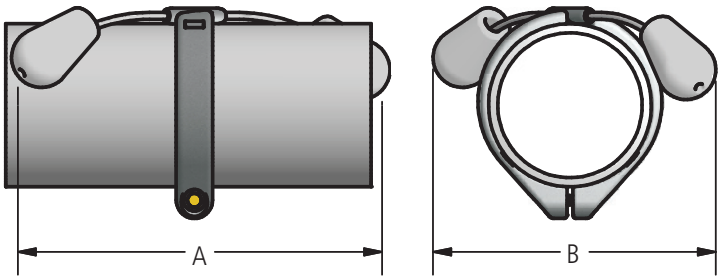

FIG. 2

Ordering Information

CATALOG NUMBER	SPS	FIG. NO.	DIMENSIONS IN INCHES		
			A	B	BOLT SIZE
1706-190	1-1/2	1	29.5	9.9	5/8-11
1706-238	2	1	29.5	9.9	5/8-11
1706-288	2-1/2	1	29.6	10.2	5/8-11
1706-350	3	1	29.6	10.3	3/4-10
1706-008	3	2	28.0	12.6	1/2-13
1706-009	3-1/2	2	27.8	13.2	1/2-13
1706-010	4	2	27.6	13.6	1/2-13
1706-012	5	2	26.8	15.4	1/2-13
1706-013	6	2	26.2	17.8	1/2-13
1706-014	8 O.D.	2	24.8	18.6	1/2-13

© 2011, AFL, all rights reserved. PP-3-00161, Revision 1, 7.23.13
Specifications are subject to change without notice.

DOSSERT®

TYPE 1706

Bus Vibration Dampers

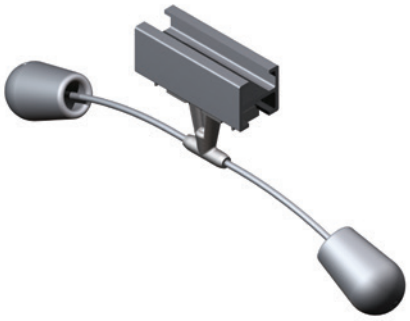

Vibration dampers for universal angle bus conductor (UABC) and integral web channel bus conductor (IWCB) are specifically designed to control Aeolian or wind-induced vibration in long bus spans. The dampers provide a fast, economical method of damping vibration. Installation is easy; the IWCB damper clamps to the bus by means of a bolt and clamp nut while the UABC damper bolts directly to the bus.

Determine catalog number based on the bus conductor size being used. Ex: A bus vibration damper for 4"x4" IWCB, the complete catalog number is: 1706-129.

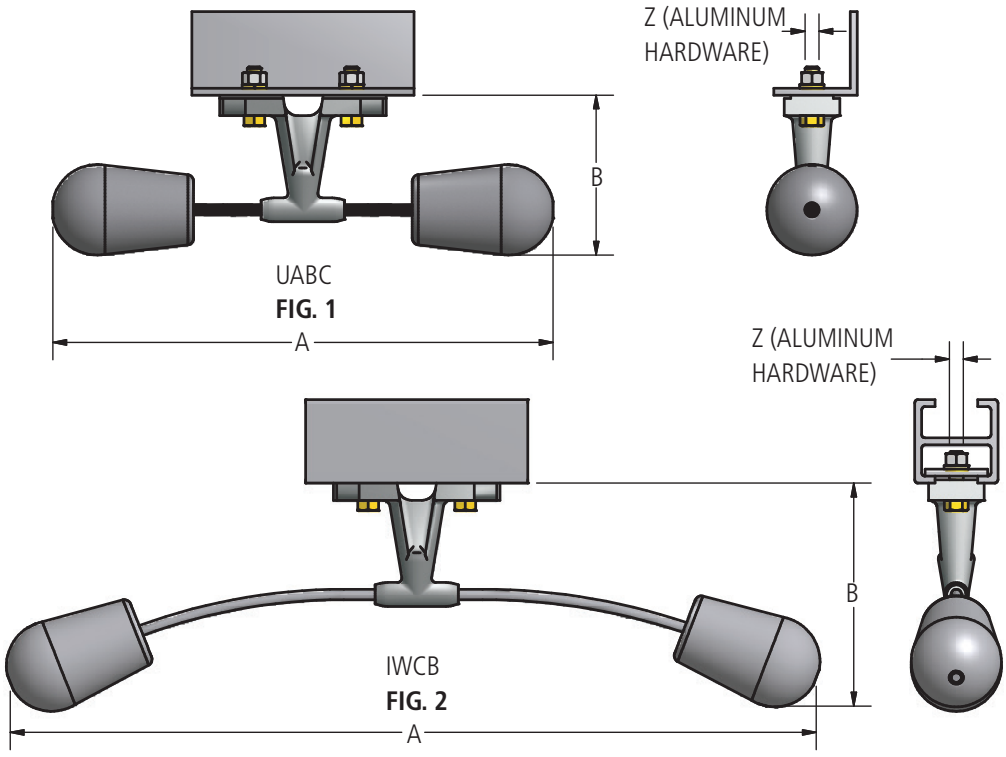

Ordering Information

CONDUCTOR SIZE IN	FIG. NO.	CATALOG NUMBER	DIMENSIONS IN INCHES		
			A	B	BOLT SIZE
3-1/4 x 3-1/4 Thru 5 x 5 UABC	1	1706-123	15.5	5.7	1/2-13
4 x 4 Thru 9 x 9 IWCB	2	1706-129	29	10.1	1/2-13

© 2011, AFL, all rights reserved. PP-3-00161, Revision 1, 7.23.13
Specifications are subject to change without notice.

Table of Contents

230 kV Aluminum Welded

230 kV Welded Table of Contents 377
Pictorial Index 379

Welded Bus Supports
Type HPS-AA, HPS-CH-AA 381
Type PLHS-AA, PLHS-CH-AA 383
Type PLHSO-AA. 384
Type WPS-AA 385
Type WPSO-AA 387
Type WPSSL-AA. 388
Type WPSV-AA 389
Type WXBC-AA 390

Welded Couplers
Type 14700. 392
Type 15100. 394
Type WS-AA, WS-E-AA 396
Type WSXL-SI-AA 397
Type WWC-AA, WWC-E-AA. 398
Type WWCR-AA, WWCR-E-AA. 399
Type WWSC-AA. 400
Type XWWC-AA, XWWC-E-AA 401
Type XWWCT-AA. 402

Welded End Bells
Type WCX-AA 403
Type WCI-AA, WCI-E-AA 404
Type WP-AA, WP-E-AA 405

Welded Elbows
Type WEPI-AA, WEPI-30-AA, WEPI-45-AA, WEPI-60-AA 406

Welded Pipe Taps and Extensions
Type WGPH-AA. 408
Type WTC-AA 409
Type WTF-AA 410

Welded Tee and Vee Connectors
Type 1000 Series. 411
Type A-Frame Connectors, 14500 & 14600 Series 413
Type WT-AA, WTA-75-AA, WTA-80-AA. 415
Type WVBP-20-AA, WVBP-30-AA 417

Welded Terminal Connectors
Type 15950, 15960 Series. 419
Type 34300. 420
Type WP2C-N-AA, WP2CA-N-45-AA, WP2CA-N-90-AA 421
Type WPC-N-AA, WPCA-N-45-AA, WPCA-N-90-AA 424
Type WTP-N-AA 427
Type WTPA-N-45-AA. 429
Type WTPA-N-90-AA. 431
Type WTPC-N-AA 433
Type WTPI-N-AA, WTPIA-N-45-AA, WTPIA-N-90-AA 434
Type WTPIC-N-AA. 436
Type WTPO-N-AA, WTPOA-N-45-AA, WTPOA-N-90-AA,. 437
Type WTPOC-AA 440
Type WWSC-AA. 441
Type WXL-90V-AA. 442
Type WXL-AA, WXL-E-AA 444
Type WXLO-AA, WXLO-E-AA 446

230 kV or Less Aluminum Welded

230 kV or Less Aluminum Welded

230 kV Aluminum Welded Bus Supports

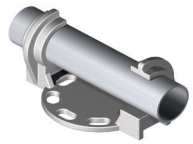	HPS-AA, HPS-CH-AA PG. 381
	PLHS-AA, PLHS-CH-AA PG. 383
	PLHSO-AA SERIES PG. 384
	WPS-AA SERIES PG. 385
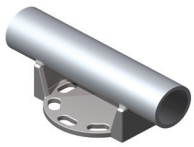	WPSO-AA PG. 387
	WPSSL-AA SERIES PG. 388
	WPSV-AA PG. 389
	WXBC-AA SERIES PG. 390

230 kV Aluminum Welded Couplers

	14700 SERIES PG. 392
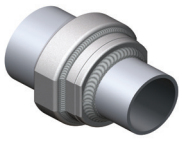	15100 SERIES PG. 394
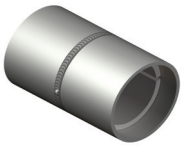	WS-AA, WS-E-AA SERIES PG. 396
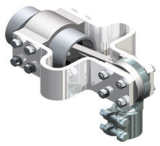	WSXL-SI-AA SERIES PG. 397
	WWC-AA, WWC-E-AA SERIES PG. 398
	WWCR-AA, WWCR-E-AA SERIES PG. 399
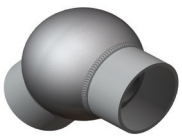	WWSC-AA SERIES PG. 400
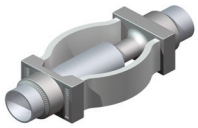	XWWC-AA, XWWC-E-AA SERIES PG. 401
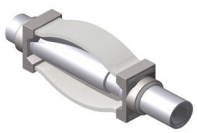	XWWCT-AA SERIES PG. 402

230 kV Aluminum Welded End Bells

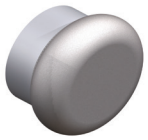	WCX-AA SERIES PG. 403
	WCI-AA, WCI-E-AA SERIES PG. 404
	WP-AA, WP-E-AA SERIES PG. 405

230 kV Aluminum Welded Elbows

	WEPI-AA SERIES PG. 406

230 kV Aluminum Welded Pipe Taps & Extensions

	WGPH-AA SERIES PG. 408
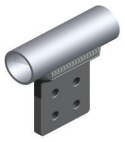	WTC-AA SERIES PG. 409

© 2011, AFL, all rights reserved. PP-3-00018, Revision 8, 7.6.2023
Specifications are subject to change without notice.

230 kV or Less Aluminum Welded

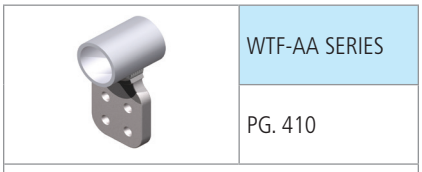
WTF-AA SERIES
PG. 410

230 kV Aluminum Welded Tee and Vee Connectors

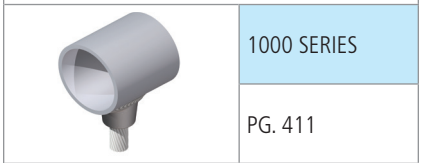
1000 SERIES
PG. 411

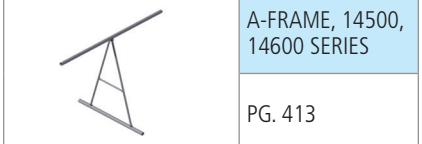
A-FRAME, 14500, 14600 SERIES
PG. 413


WT-AA, WTA-75-AA, -80 SERIES
PG. 415


WVBP-20-AA, WVBP-30-AA SERIES
PG. 417

230 kV Aluminum Welded Terminal Connectors


15950, 15960 SERIES
PG. 419

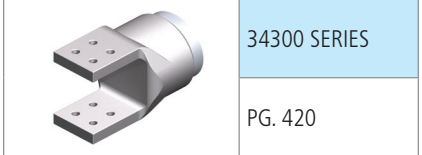
34300 SERIES
PG. 420


WP2C-N-AA, WP2CA-N-45-AA, WP2CA-N-90-AA SERIES
PG. 421

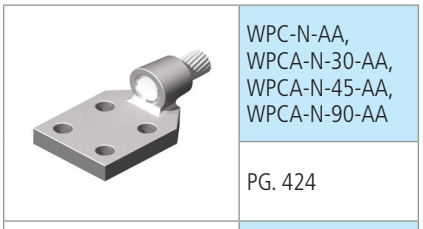
WPC-N-AA, WPCA-N-30-AA, WPCA-N-45-AA, WPCA-N-90-AA
PG. 424


WTP-N-AA SERIES
PG. 427


WTPA-N-45-AA SERIES
PG. 429

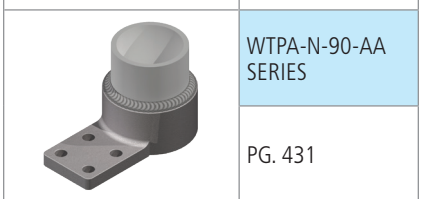
WTPA-N-90-AA SERIES
PG. 431


WTPC-N-AA SERIES
PG. 433


WTPI-N-AA, WTPIA-N-45-AA, WTPIA-N-90-AA SERIES
PG. 434


WTPIC-N-AA SERIES
PG. 436


WTPO-N-AA, WTPOA-N-45-AA, WTPOA-N-90-AA SERIES
PG. 437


WTPOC-AA SERIES
PG. 440


WWSC-AA SERIES
PG. 441


WXL-90V-AA SERIES
PG. 442

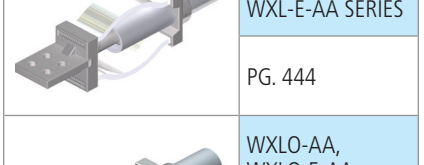
WXL-AA, WXL-E-AA SERIES
PG. 444


WXLO-AA, WXLO-E-AA SERIES
PG. 446

© 2011, AFL, all rights reserved. PP-3-00018, Revision 8, 7.6.2023
Specifications are subject to change without notice.

DOSSERT®

TYPE HPS-AA, HPS-CH-AA

HPS is a horizontal support for a rigid fit and the HPS-CH is a for a horizontal support for a slip fit.

Material

Aluminum Alloy

Hardware

Galvanized steel hardware supplied for base mounting.

Notes

- For Slip Bus Support, add suffix "-CH" to catalog number. Ex: HPS100-3B-CH-AA.
- For base mounting dimensions and hardware, see page 3 in the general catalog index of AFL's Substation catalog.

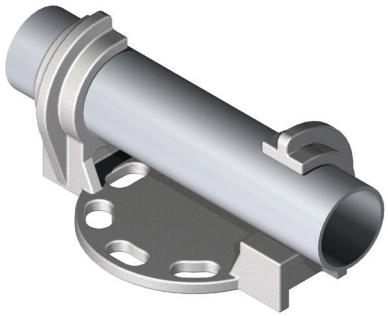

HPS-AA

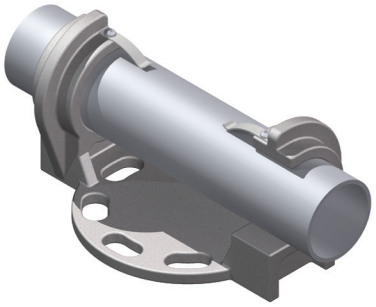

HPS-CH-AA

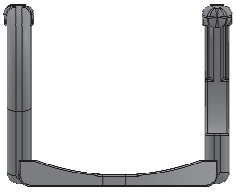

HPS-AA

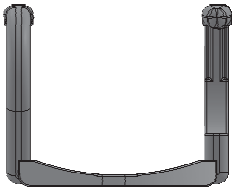

HPS-CH-AA

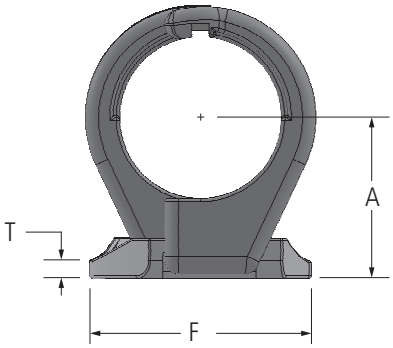

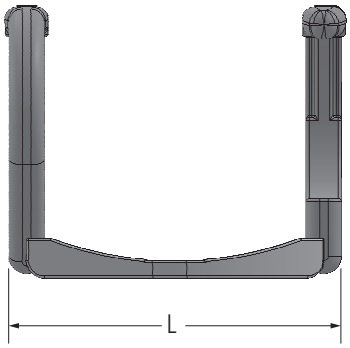

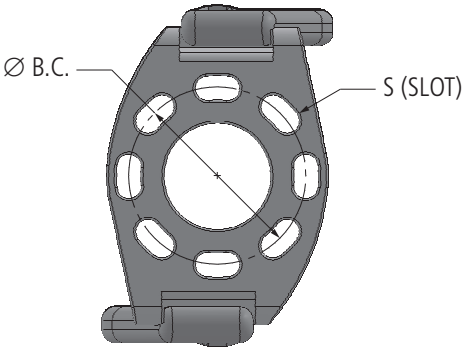

continued

© 2010, AFL, all rights reserved. PP-3-00374, Revision 2, 10.18.2022
Specifications are subject to change without notice.

DOSSERT®

TYPE HPS-AA, HPS-CH-AA

Ordering Information

CATALOG NUMBER		SPS	DIMENSIONS IN INCHES					
STANDARD	WITH CHATTER SPRING		A	B.C.	F	L	S	T
HPS100-3-AA	HPS100-3-CH-AA	1	2	3	4 1/4	5 3/4	9/16	3/8
HPS100-5-AA	HPS100-5-CH-AA	1	2	5	6 1/4	8	11/16	3/8
HPS125-3-AA	HPS125-3-CH-AA	1 1/4	2 1/4	3	4 1/4	5 3/4	9/16	3/8
HPS125-5-AA	HPS125-5-CH-AA	1 1/4	2 3/8	5	6 1/4	8	11/16	3/8
HPS150-3-AA	HPS150-3-CH-AA	1 1/2	2 1/2	3	4 1/4	5 3/4	9/16	3/8
HPS150-5-AA	HPS150-5-CH-AA	1 1/2	2 1/2	5	6 1/4	8 1/2	11/16	3/8
HPS200-3-AA	HPS200-3-CH-AA	2	2 3/4	3	4 1/4	6 1/4	9/16	3/8
HPS200-5-AA	HPS200-5-CH-AA	2	2 3/4	5	6 1/4	8 1/2	11/16	3/8
HPS250-3-AA	HPS250-3-CH-AA	2 1/2	3 1/8	3	4 1/4	6 5/8	9/16	3/8
HPS250-5-AA	HPS250-5-CH-AA	2 1/2	3 1/8	5	6 1/4	8 7/8	11/16	3/8
HPS300-3-AA	HPS300-3-CH-AA	3	3 5/8	3	4 1/4	6 5/8	9/16	3/8
HPS300-5-AA	HPS300-5-CH-AA	3	3 5/8	5	6 1/4	8 7/8	11/16	3/8
HPS350-3-AA	HPS350-3-CH-AA	3 1/2	4	3	4 1/4	7 1/4	9/16	7/16
HPS350-5-AA	HPS350-5-CH-AA	3 1/2	4	5	6 1/4	9 1/2	11/16	7/16
HPS400-3-AA	HPS400-3-CH-AA	4	4 1/2	3	4 1/4	7 5/8	9/16	1/2
HPS400-5-AA	HPS400-5-CH-AA	4	4 1/2	5	6 1/4	9 3/8	11/16	1/2
HPS400-7-AA	HPS400-7-CH-AA	4	4 1/2	7	8 1/2	11 7/8	13/16	1/2
HPS500-3-AA	HPS500-3-CH-AA	5	5	3	4 1/4	8 1/4	9/16	1/2
HPS500-5-AA	HPS500-5-CH-AA	5	5	5	6 1/4	10	11/16	1/2
HPS500-7-AA	HPS500-7-CH-AA	5	5	7	8 1/2	11 7/8	13/16	1/2
*HPS600-3-AA	HPS600-3-CH-AA	6	5 1/2	3	4 1/4	8 1/8	9/16	1/2
HPS600-5-AA	HPS600-5-CH-AA	6	5 1/2	5	6 1/4	10	11/16	1/2
HPS600-7-AA	HPS600-7-CH-AA	6	5 1/2	7	8 1/2	12 1/4	13/16	1/2
*HPS800-3-AA	HPS800-3-CH-AA	8	6 1/2	3	4 1/4	9 3/4	9/16	1/2
*HPS800-5-AA	HPS800-5-CH-AA	8	6 1/2	5	6 1/4	11	11/16	1/2
HPS800-7-AA	HPS800-7-CH-AA	8	6 7/8	7	8 1/2	12 1/4	13/16	1/2

* Denotes this size will not install rotated 90 degrees from bus pipe.

© 2010, AFL, all rights reserved. PP-3-00374, Revision 2, 10.18.2022
Specifications are subject to change without notice.

230 kV Aluminum Welded Bus Supports

DOSSERT®

TYPE PLHS-AA, PLHS-CH-AA

Slip or Fixed Bus Support

Can be used as a slip or fixed bus support or fixed support by being welded into position.



PLHS-AA

Material

Aluminum Alloy

Hardware

Galvanized steel hardware supplied for base mounting.

Notes

1. For base mounting dimensions and hardware see page 3 in the general catalog index.

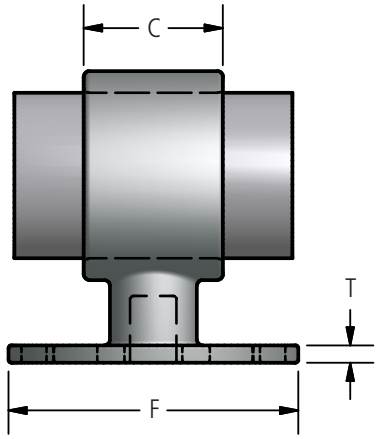

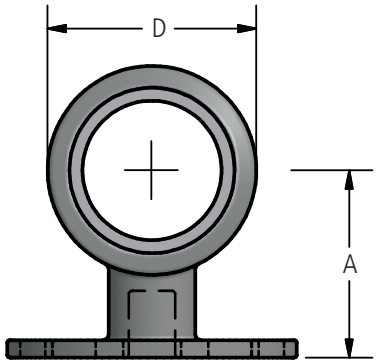

Ordering Information

CATALOG NUMBER		SPS	BOLT CIRCLE	DIMENSIONS IN INCHES				
STANDARD	WITH CHATTER SPRING			A	C	D	T	F
PLHS75-3-AA	PLHS75-3-CH-AA	3/4	3	2	1-1/4	1-9/16	3/8	4-1/4
PLHS75-5-AA	PLHS75-5-CH-AA	3/4	5	2-1/4	1-1/4	1-9/16	3/8	6-1/4
PLHS100-3-AA	PLHS100-3-CH-AA	1	3	2	1-1/4	1-7/8	3/8	4-1/4
PLHS100-5-AA	PLHS100-5-CH-AA	1	5	2-1/4	1-1/4	1-7/8	3/8	6-1/4
PLHS125-3-AA	PLHS125-3-CH-AA	1-1/4	3	2-1/4	1-1/2	2-1/4	3/8	4-1/4
PLHS125-5-AA	PLHS125-5-CH-AA	1-1/4	5	2-3/8	1-1/2	2-1/4	3/8	6-1/4
PLHS150-3-AA	PLHS150-3-CH-AA	1-1/2	3	2-1/2	1-1/2	2-5/8	3/8	4-1/4
PLHS150-5-AA	PLHS150-5-CH-AA	1-1/2	5	2-1/2	1-1/2	2-5/8	3/8	6-1/4
PLHS200-3-AA	PLHS200-3-CH-AA	2	3	2-3/4	2	3-1/4	3/8	4-1/4
PLHS200-5-AA	PLHS200-5-CH-AA	2	5	2-3/4	2	3-1/4	3/8	6-1/4
PLHS250-3-AA	PLHS250-3-CH-AA	2-1/2	3	3-1/8	2	3-11/16	3/8	4-1/4
PLHS250-5-AA	PLHS250-5-CH-AA	2-1/2	5	3-1/8	2	3-11/16	3/8	6-1/4
PLHS300-3-AA	PLHS300-3-CH-AA	3	3	3-5/8	2-1/2	4-1/2	3/8	4-1/4
PLHS300-5-AA	PLHS300-5-CH-AA	3	5	3-5/8	3	4-1/2	7/16	6-1/4
PLHS350-3-AA	PLHS350-3-CH-AA	3-1/2	3	4	3	5	7/16	4-1/4
PLHS350-5-AA	PLHS350-5-CH-AA	3-1/2	5	4	3	5	7/16	6-1/4
PLHS400-3-AA	PLHS400-3-CH-AA	4	3	4-1/2	3	5-9/16	3/8	4-1/4
PLHS400-5-AA	PLHS400-5-CH-AA	4	5	4-1/2	3	5-1/2	7/16	6-1/4
PLHS450-3-AA	PLHS450-3-CH-AA	4-1/2	3	4-3/4	3	6	7/16	4-1/4
PLHS450-5-AA	PLHS450-5-CH-AA	4-1/2	5	4-3/4	3	6	7/16	6-1/4
PLHS500-3-AA	PLHS500-3-CH-AA	5	3	5	3	6-9/16	7/16	4-1/4
PLHS500-5-AA	PLHS500-5-CH-AA	5	5	5	3	6-9/16	7/16	6-1/4
PLHS600-3-AA	PLHS600-3-CH-AA	6	3	5-1/2	4	7-5/8	7/16	4-1/4
PLHS600-5-AA	PLHS600-5-CH-AA	6	5	5-1/2	4	7-5/8	7/16	6-1/4

© 2010, AFL, all rights reserved. PP-3-00401, Revision 3, 2.25.19
Specifications are subject to change without notice.

DOSSERT®

TYPE PLHSO-AA

Bus Support for Pipes, Slip or Fixed



Material

Aluminum Alloy

Hardware

Galvanized steel hardware supplied for base mounting.

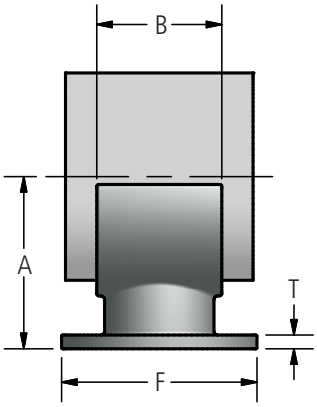

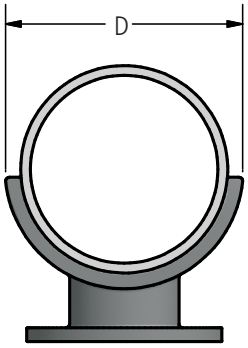

Ordering Information

CATALOG NUMBER	SPS	BOLT CIRCLE	DIMENSIONS IN INCHES				
			A	B	D	F	T
PLHSO75-3-AA	3/4	3	2	1-1/4	1-9/16	4-1/4	3/8
PLHSO75-5-AA	3/4	5	2-1/4	1-1/4	1-9/16	6-1/4	3/8
PLHSO100-3-AA	1	3	2	1-1/4	1-7/8	4-1/4	3/8
PLHSO100-5-AA	1	5	2-1/4	1-1/4	1-7/8	6-1/4	3/8
PLHSO125-3-AA	1-1/4	3	2-1/4	1-1/2	2-1/4	4-1/4	3/8
PLHSO125-5-AA	1-1/4	5	2-3/8	1-1/2	2-1/4	6-1/4	3/8
PLHSO150-3-AA	1-1/2	3	2-1/2	1-1/2	2-5/8	4-1/4	3/8
PLHSO150-5-AA	1-1/2	5	2-1/2	1-1/2	2-5/8	6-1/4	3/8
PLHSO200-3-AA	2	3	2-3/4	2	3-1/4	4-1/4	3/8
PLHSO200-5-AA	2	5	2-3/4	2	3-1/4	6-1/4	3/8
PLHSO250-3-AA	2-1/2	3	3-1/8	2	3-11/16	4-1/4	3/8
PLHSO250-5-AA	2-1/2	5	3-1/8	2	3-11/16	6-1/4	3/8
PLHSO300-3-AA	3	3	3-5/8	3	4-1/2	4-1/4	7/16
PLHSO300-5-AA	3	5	3-5/8	3	4-1/2	6-1/4	7/16
PLHSO350-3-AA	3-1/2	3	4	3	5	4-1/4	7/16
PLHSO350-5-AA	3-1/2	5	4	3	5	6-1/4	7/16
PLHSO400-3-AA	4	3	4-1/2	3	5-1/2	4-1/4	7/16
PLHSO400-5-AA	4	5	4-1/2	3	5-1/2	6-1/4	1/2
PLHSO450-3-AA	4-1/2	3	4-3/4	3	6	4-1/4	7/16
PLHSO450-5-AA	4-1/2	5	4-3/4	3	6	6-1/4	7/16
PLHSO500-3-AA	5	3	5	3	6-9/16	4-1/4	7/16
PLHSO500-5-AA	5	5	5	3	6-9/16	6-1/4	7/16
PLHSO600-3-AA	6	3	5-1/2	4	7-5/8	4-1/4	7/16
PLHSO600-5-AA	6	5	5-1/2	4	7-5/8	6-1/4	7/16
PLHSO800-5-AA	8	5	6-15/16	4	9-5/8	6-1/4	7/16
PLHSO800-7-AA	8	7	6-15/16	4	9-5/8	8-1/2	7/16

© 2010, AFL, all rights reserved. PP-3-00030, Revision, 1, 10.17.2022
Specifications are subject to change without notice.

DOSSERT®

TYPE WPS-AA

Aluminum Bus Support

Horizontal type support for pipe or tube to insulator. Slip or rigid fit applications.

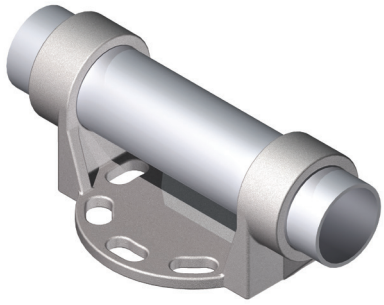

Material

Aluminum Alloy

Hardware

Galvanized steel mounting hardware.

Notes

1. For base mounting dimensions and hardware see page 3 in the general catalog index.

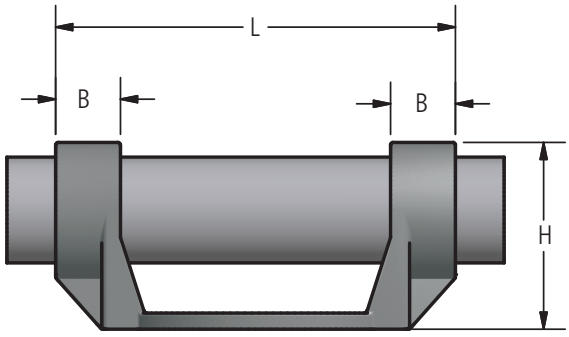

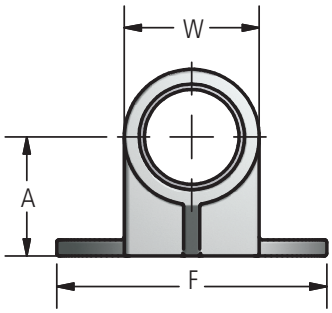

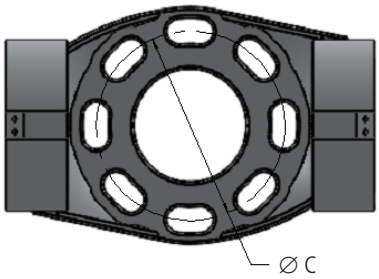

DETAIL A

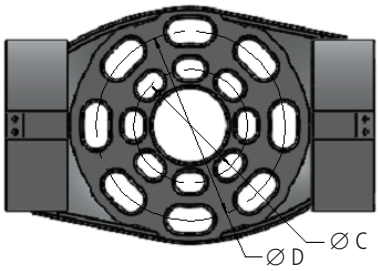

DETAIL B

continued

© 2010, AFL, all rights reserved. PP-3-00537, Revision 1, 10.17.2022
Specifications are subject to change without notice.

DOSSERT®

TYPE WPS-AA

Aluminum Welded Bus Support

Ordering Information

CATALOG NUMBER		SPS	BOLT CIRCLE	DIMENSIONS IN INCHES							
STANDARD	WITH CHATTER SPRING			A	B	C	D	F	H	L	W
WPS100-3-AA	WPS100-3-CH-AA	1	A	2	1	3	-	4 1/4	2 31/32	6 1/4	1 29/32
WPS100-5-AA	WPS100-5-CH-AA	1	A	2 1/4	1	5	-	6 1/4	3 7/32	7 27/32	1 29/32
WPS125-3-AA	WPS125-3-CH-AA	1 1/4	A	2 1/4	1	3	-	4 1/4	3 3/8	6 1/4	2 9/32
WPS125-5-AA	WPS125-5-CH-AA	1 1/4	A	2 3/8	1	5	-	6 1/4	3 17/32	8 1/8	2 9/32
WPS150-3-AA	WPS150-3-CH-AA	1 1/2	A	2 1/2	1 1/4	3	-	4 1/4	3 3/4	6 3/4	2 9/32
WPS150-5-AA	WPS150-5-CH-AA	1 1/2	A	2 1/2	1 1/4	5	-	6 1/4	3 3/4	8 3/4	2 9/32
WPS200-3-AA	WPS200-3-CH-AA	2	A	2 3/4	1 1/2	3	-	4 1/4	4 1/4	7 1/4	3 5/32
WPS200-5-AA	WPS200-5-CH-AA	2	A	2 3/4	1 1/2	5	-	6 1/4	4 1/4	9 1/8	3 5/32
WPS250-3-AA	WPS250-3-CH-AA	2 1/2	A	3 1/8	1 1/2	3	-	4 1/4	5	7 1/4	3 13/16
WPS250-5-AA	WPS250-5-CH-AA	2 1/2	A	3 1/8	1 1/2	5	-	6 1/4	5	9 3/16	3 13/16
WPS250-7-AA	WPS250-7-CH-AA	2 1/2	A	3 1/8	1 1/2	7	-	8 1/2	5	12	3 13/16
WPS300-3-AA	WPS300-3-CH-AA	3	A	3 5/8	1 3/4	3	-	4 1/4	5 25/32	7 3/4	4 5/16
WPS300-3/5-AA	WPS300-3/5-CH-AA	3	B	3 5/8	1 3/4	3	5	6 1/4	5 25/32	9 3/4	4 5/16
WPS300-5-AA	WPS300-5-CH-AA	3	A	3 5/8	1 3/4	5	-	6 1/4	5 25/32	9 3/4	4 5/16
WPS300-5/7-AA	WPS300-5/7-CH-AA	3	B	3 5/8	1 3/4	5	7	8 1/2	5 25/32	12 1/4	4 5/16
WPS300-7-AA	WPS300-7-CH-AA	3	A	3 5/8	1 3/4	7	-	8 1/2	5 25/32	12 1/4	4 5/16
WPS350-3-AA	WPS350-3-CH-AA	3 1/2	A	4	1 3/4	3	-	4 1/4	6 1/2	7 3/4	5
WPS350-3/5-AA	WPS350-3/5-CH-AA	3 1/2	B	4	1 3/4	3	5	6 1/4	6 1/2	9 3/4	5
WPS350-5-AA	WPS350-5-CH-AA	3 1/2	A	4	1 3/4	5	-	6 1/4	6 1/2	9 3/4	5
WPS350-5/7-AA	WPS350-5/7-CH-AA	3 1/2	B	4	1 3/4	5	7	8 1/2	6 1/2	12 1/8	5
WPS350-7-AA	WPS350-7-CH-AA	3 1/2	A	4	1 3/4	7	-	8 1/2	6 1/2	12 1/8	5
WPS400-3-AA	WPS400-3-CH-AA	4	A	4 1/2	2	3	-	4 1/4	7 1/4	8 1/8	5 15/32
WPS400-3/5-AA	WPS400-3/5-CH-AA	4	B	4 1/2	2	3	5	6 1/4	7 1/4	10 1/4	5 15/32
WPS400-5-AA	WPS400-5-CH-AA	4	A	4 1/2	2	5	-	6 1/4	7 1/4	10 1/4	5 15/32
WPS400-5/7-AA	WPS400-5/7-CH-AA	4	B	4 1/2	2	5	7	8 1/2	7 1/4	12 1/2	5 15/32
WPS400-7-AA	WPS400-7-CH-AA	4	A	4 1/2	2	7	-	8 1/2	7 1/4	12 1/2	5 15/32
WPS450-3-AA	WPS450-3-CH-AA	4 1/2	A	4 3/4	2	3	-	4 1/4	7 1/4	8 1/4	5 31/32
WPS450-3/5-AA	WPS450-3/5-CH-AA	4 1/2	B	4 3/4	2	3	5	6 1/4	7 1/4	10 1/4	5 31/32
WPS450-5-AA	WPS450-5-CH-AA	4 1/2	A	4 3/4	2	5	-	6 1/4	7 1/4	10 1/4	5 31/32
WPS450-5/7-AA	WPS450-5/7-CH-AA	4 1/2	B	4 3/4	2	5	7	8 1/2	7 1/4	12 1/2	5 15/32
WPS450-7-AA	WPS450-7-CH-AA	4 1/2	A	4 3/4	2	7	-	8 1/2	7 1/4	12 1/2	5 15/32
WPS500-3-AA	WPS500-3-CH-AA	5	A	5	2 1/4	3	-	4 1/4	8 9/16	8 7/8	6 5/8
WPS500-3/5-AA	WPS500-3/5-CH-AA	5	B	5	2 1/4	3	5	6 1/4	8 9/16	10 7/8	6 5/8
WPS500-5-AA	WPS500-5-CH-AA	5	A	5	2 1/4	5	-	6 1/4	8 9/16	10 7/8	6 5/8
WPS500-5/7-AA	WPS500-5/7-CH-AA	5	B	5	2 1/4	5	7	8 1/2	8 9/16	13 1/8	6 5/8
WPS500-7-AA	WPS500-7-CH-AA	5	A	5	2 1/4	7	-	8 1/2	8 9/16	13 1/8	6 5/8
WPS600-3-AA	WPS600-3-CH-AA	6	A	5 1/2	2 1/4	3	-	4 1/4	9 23/32	8 7/8	7 7/8
WPS600-3/5-AA	WPS600-3/5-CH-AA	6	B	5 1/2	2 1/4	3	5	6 1/4	9 23/32	10 7/8	7 7/8
WPS600-5-AA	WPS600-5-CH-AA	6	A	5 1/2	2 1/4	5	-	6 1/4	9 23/32	10 7/8	7 7/8
WPS600-5/7-AA	WPS600-5/7-CH-AA	6	B	5 1/2	2 1/4	5	7	8 1/2	9 23/32	13 1/8	7 7/8
WPS600-7-AA	WPS600-7-CH-AA	6	A	5 1/2	2 1/4	7	-	8 1/2	9 23/32	13 1/8	7 7/8
WPS800-5-AA	WPS800-5-CH-AA	8	A	6 15/16	2	5	-	8 1/2	11 3/4	13 7/8	9 3/4
WPS800-7-AA	WPS800-7-CH-AA	8	A	6 15/16	2	7	-	8 1/2	11 3/4	13 7/8	9 3/4

© 2010, AFL, all rights reserved. PP-3-00537, Revision 1, 10.17.2022
Specifications are subject to change without notice.

DOSSERT®

TYPE WPSO-AA

Aluminum Welded Bus Support

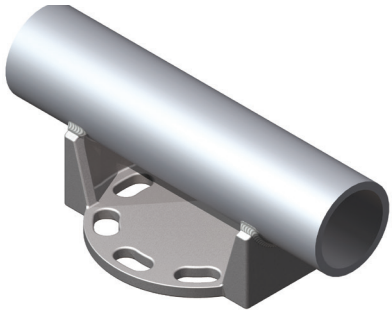

Open saddle horizontal type support for pipe to insulator. Rigid applications only. Pipe lays into support and is welded in the field.

Material

Aluminum Alloy

Hardware

Galvanized steel base mounting hardware.

Note

1. For base mounting dimensions and hardware, see page 3 in the general catalog index.

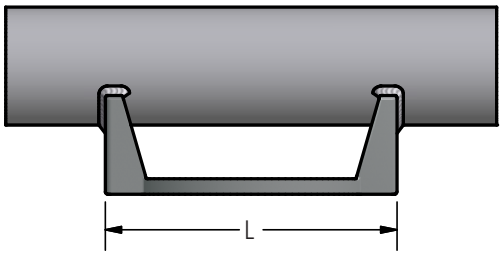

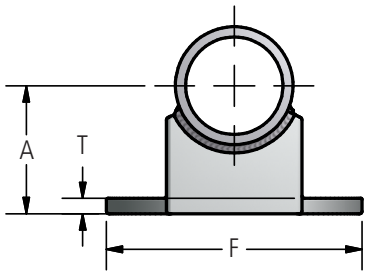

Ordering Information

CATALOG NUMBER	SPS	BOLT CIRCLE	DIMENSIONS IN INCHES			
			A	F	L	T
WPSO75-3-AA	3/4	3	2	4 1/4	4 3/4	3/8
WPSO75-5-AA	3/4	5	2 1/4	6 1/4	6 7/8	3/8
WPSO100-3-AA	1	3	2	4 1/4	4 3/4	3/8
WPSO100-5-AA	1	5	2 1/4	6 1/4	6 7/8	3/8
WPSO125-3-AA	1 1/4	3	2 1/4	4 1/4	5 1/4	3/8
WPSO125-5-AA	1 1/4	5	2 3/8	6 1/4	7	3/8
WPSO150-3-AA	1 1/2	3	2 1/2	4 1/4	4 7/8	3/8
WPSO150-5-AA	1 1/2	5	2 1/2	6 1/4	7	3/8
WPSO200-3-AA	2	3	2 3/4	4 1/4	5	3/8
WPSO200-5-AA	2	5	2 3/4	6 1/4	7 1/8	3/8
WPSO250-3-AA	2 1/2	3	3 1/8	4 1/4	5	3/8
WPSO250-5-AA	2 1/2	5	3 1/8	6 1/4	7 1/8	3/8
WPSO300-3-AA	3	3	3 5/8	4 1/4	5 1/8	3/8
WPSO300-5-AA	3	5	3 5/8	6 1/4	7 1/4	3/8
WPSO350-3-AA	3 1/2	3	4	4 1/4	5 3/8	1/2
WPSO350-5-AA	3 1/2	5	4	6 1/4	7 1/4	1/2
WPSO400-3-AA	4	3	4 1/2	4 1/4	5 1/8	1/2
WPSO400-5-AA	4	5	4 1/2	6 1/4	7 1/4	1/2
WPSO500-3-AA	5	3	5	4 1/4	5 3/8	1/2
WPSO500-5-AA	5	5	5	6 1/4	7 1/2	1/2
WPSO600-3-AA	6	3	5 1/2	4 1/4	5 3/8	1/2
WPSO600-5-AA	6	5	5 1/2	6 1/4	7 1/2	1/2
WPSO400-7-AA	4	7	4 1/4	8 5/8	9 5/8	1/2
WPSO500-7-AA	5	7	5	8 5/8	9 5/8	1/2
WPSO600-7-AA	6	7	5 1/2	8 5/8	9 5/8	1/2
WPSO800-5-AA	8	5	6 15/16	6 1/4	9 5/8	1/2
WPSO800-7-AA	8	7	6 15/16	8 5/8	9 5/8	1/2

© 2010, AFL, all rights reserved. PP-3-00538, Revision 3, 10.17.2022
Specifications are subject to change without notice.

230 kV Aluminum Welded Bus Supports

DOSSERT®

TYPE WPSSL-AA

Welded Slide Bus Support

Pipe or bus tube is welded to support. The support is then bolted directly into the insulator. Bolt sleeves allow the whole support to slide on the insulator. Bolt sleeves for rigid fix support can be ordered.

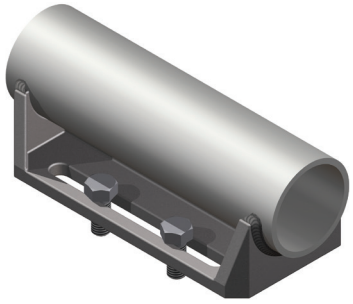

Material

Aluminum Alloy

Hardware

Galvanized steel hardware for base mounting.

Notes

Add "R" to catalog number for rigid fit; EX: WPSSL300-5-R-AA
Add "SR"for slip and rigid fit; EX: WPSSL30-5-R-AA

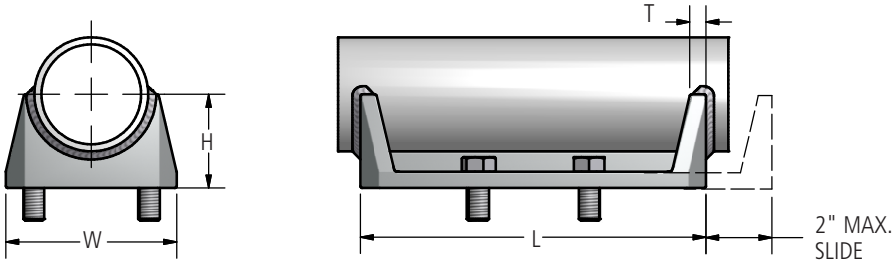

SLIDE BUS SUPPORT ASSEMBLY 1

FIXED BUS SUPPORT ASSEMBLY 2

Ordering Information

CATALOG NUMBER		SPS	BOLT CIRCLE	DIMENSIONS IN INCHES				
SLIP FIT	RIGID FIT			H	L	T	W	BOLT SIZE
WPSSL100-3-AA	WPSSL100-3-R-AA	1	3	2	8-1/2	1/2	3-1/4	1/2
WPSSL100-5-AA	WPSSL100-5-R-AA	1	5	2-1/4	10-1/2	1/2	5-3/8	5/8
WPSSL125-3-AA	WPSSL125-3-R-AA	1-1/4	3	2-1/4	8-1/2	1/2	3-1/4	1/2
WPSSL125-5-AA	WPSSL125-5-R-AA	1-1/4	5	2-3/8	10-1/2	1/2	5-3/8	5/8
WPSSL150-3-AA	WPSSL150-3-R-AA	1-1/2	3	2-1/2	8-1/2	1/2	3-1/4	1/2
WPSSL150-5-AA	WPSSL150-5-R-AA	1-1/2	5	2-1/2	10-1/2	1/2	5-3/8	5/8
WPSSL200-3-AA	WPSSL200-3-R-AA	2	3	2-3/4	8-1/2	1/2	3-1/4	1/2
WPSSL200-5-AA	WPSSL200-5-R-AA	2	5	2-3/4	10-1/2	1/2	5-3/8	5/8
WPSSL250-3-AA	WPSSL250-3-R-AA	2-1/2	3	3-1/8	8-1/2	1/2	3-1/4	1/2
WPSSL250-5-AA	WPSSL250-5-R-AA	2-1/2	5	3-1/8	10-1/2	1/2	5-3/8	5/8
WPSSL300-3-AA	WPSSL300-3-R-AA	3	3	3-5/8	8-1/2	1/2	3-3/4	1/2
WPSSL300-5-AA	WPSSL300-5-R-AA	3	5	3-5/8	10-1/2	5/8	5-1/2	5/8
WPSSL350-3-AA	WPSSL350-3-R-AA	3-1/2	3	4	8-1/2	1/2	4-1/4	1/2
WPSSL350-5-AA	WPSSL350-5-R-AA	3-1/2	5	4	10-1/2	5/8	5-1/2	5/8
WPSSL400-3-AA	WPSSL400-3-R-AA	4	3	4-1/2	8-1/2	1/2	4-1/2	1/2
WPSSL400-5-AA	WPSSL400-5-R-AA	4	5	4-1/2	10-1/2	5/8	5-1/2	5/8
WPSSL450-3-AA	WPSSL450-3-R-AA	4-1/2	3	4-3/4	8-1/2	1/2	4-1/2	1/2
WPSSL450-5-AA	WPSSL450-5-R-AA	4-1/2	5	2-3/4	10-1/2	5/8	5-1/2	5/8
WPSSL500-3-AA	WPSSL500-3-R-AA	5	3	5	8-1/2	1/2	5	1/2
WPSSL500-5-AA	WPSSL500-5-R-AA	5	5	5	10-1/2	5/8	5-1/2	5/8
WPSSL500-7-AA	WPSSL500-7-R-AA	5	7	5	12-1/2	5/8	7-3/4	5/8
WPSSL600-3-AA	WPSSL600-3-R-AA	6	3	5-1/2	8-1/2	1/2	5-3/4	1/2
WPSSL600-5-AA	WPSSL600-5-R-AA	6	5	5-1/2	10-1/2	5/8	6	5/8
WPSSL800-5-AA	WPSSL800-5-R-AA	8	5	6-15/16	8-1/2	5/8	7-11/16	1/2
WPSSL800-7-AA	WPSSL800-7-R-AA	8	7	6-15/16	10-1/2	5/8	9-15/16	5/8

© 2010, AFL, all rights reserved. PP-3-00539, Revision 3, 11.2.2022
Specifications are subject to change without notice.

DOSSERT®

TYPE WPSV-AA

Vertical Welded Bus Support for Tubing or Pipe

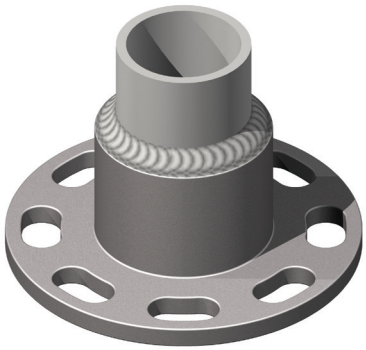

Material
Aluminum Alloy

Hardware
Galvanized steel bolts and lockwashers.

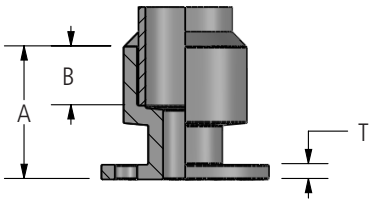

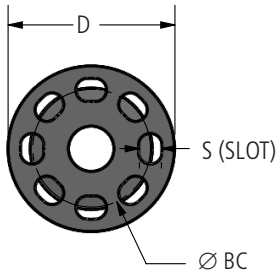

FIG. 1

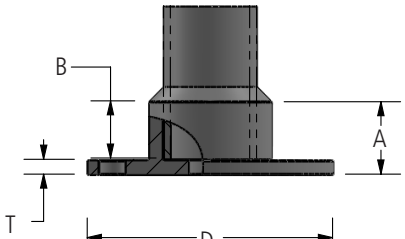

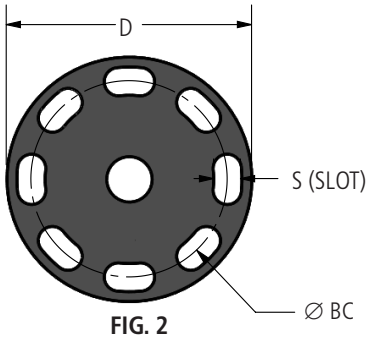

FIG. 2

Ordering Information

CATALOG NUMBER	SPS	BOLT CIRCLE	FIG. NO.	DIMENSIONS IN INCHES				
				A	B	D	S	T
WPSV100-3-AA	1	3	2	1-3/8	1	4-1/4	9/16	3/8
WPSV125-3-AA	1-1/4	3	1	3	1-1/4	4-1/4	9/16	3/8
WPSV125-5-AA	1-1/4	5	2	1-3/8	1	6-1/4	11/16	3/8
WPSV150-3-AA	1-1/2	3	1	3	1-1/4	4-1/4	9/16	3/8
WPSV150-5-AA	1-1/2	5	2	1-7/8	1-1/2	6-1/4	11/16	3/8
WPSV200-3-AA	2	3	1	3-3/8	1-1/2	4-1/4	9/16	3/8
WPSV200-5-AA	2	5	2	2-1/8	1-3/4	6-1/4	11/16	3/8
WPSV250-3-AA	2-1/2	3	1	3-3/4	1-3/4	4-1/4	9/16	3/8
WPSV250-5-AA	2-1/2	5	2	2-1/8	1-3/4	6-1/4	11/16	3/8
WPSV300-3-AA	3	3	1	3-7/8	1-3/4	4-1/4	9/16	3/8
WPSV300-5-AA	3	5	1	3-5/8	1-3/4	6-1/4	11/16	3/8
WPSV300-7-AA	3	7	2	2-1/8	1-3/4	8-1/2	13/16	3/8
WPSV350-3-AA	3-1/2	3	1	4-5/16	2	4-1/4	9/16	7/16
WPSV350-5-AA	3-1/2	5	1	4-5/16	2	6-1/4	11/16	7/16
WPSV350-7-AA	3-1/2	7	2	2-1/2	2	8-1/2	13/16	1/2
WPSV400-3-AA	4	3	1	3-7/8	1-3/4	4-1/4	9/16	3/8
WPSV400-5-AA	4	5	1	3-7/8	1-3/4	6-1/4	11/16	3/8
WPSV400-7-AA	4	7	1	3-7/8	1-3/4	8-1/2	13/16	1/2
WPSV450-3-AA	4-1/2	3	1	4-5/16	2	4-1/4	9/16	3/8
WPSV450-5-AA	4-1/2	5	1	4-1/8	1-3/4	6-1/4	11/16	3/8
WPSV450-7-AA	4-1/2	7	1	4-7/16	2	8-1/2	13/16	1/2
WPSV500-3-AA	5	3	1	4-5/16	2	4-1/4	9/16	1/2
WPSV500-5-AA	5	5	1	5-1/16	2	6-1/4	11/16	1/2
WPSV500-7-AA	5	7	1	5-1/16	2	8-1/2	13/16	1/2
WPSV600-3-AA	6	3	1	5-1/4	3	4-1/4	9/16	3/8
WPSV600-5-AA	6	5	1	5-3/8	3	6-1/4	11/16	1/2
WPSV600-7-AA	6	7	1	5-3/8	3	8-1/2	13/16	1/2
WPSV800-5-AA	8	5	1	6-3/8	3-3/4	6-1/4	11/16	1/2
WPSV800-7-AA	8	7	1	6-3/8	3-3/4	8-1/2	13/16	1/2

© 2010, AFL, all rights reserved. PP-3-00541, Revision 4, 11.2.2022
Specifications are subject to change without notice.

230 kV Aluminum Welded Bus Supports

DOSSERT®

TYPE WXBC-AA, WXBC-E-AA

Expansion Support is designed to compensate for expansion and contraction in long bus runs.

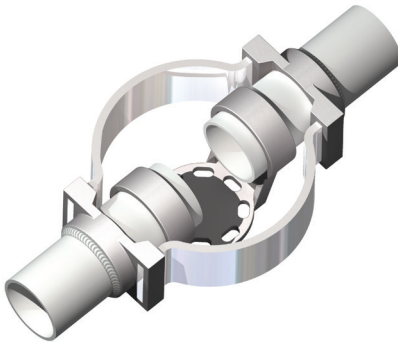

WXBC-AA

Material

Aluminum Alloy

Hardware

Galvanized steel bolts and lockwashers

Notes

- For Welded End Plug, add "-WP" to the catalog number. EX: WXBC400-5-AA-WP
- For Chatter Spring, add "-CH" to the catalog number. EX: WXBC400-5-CH-AA

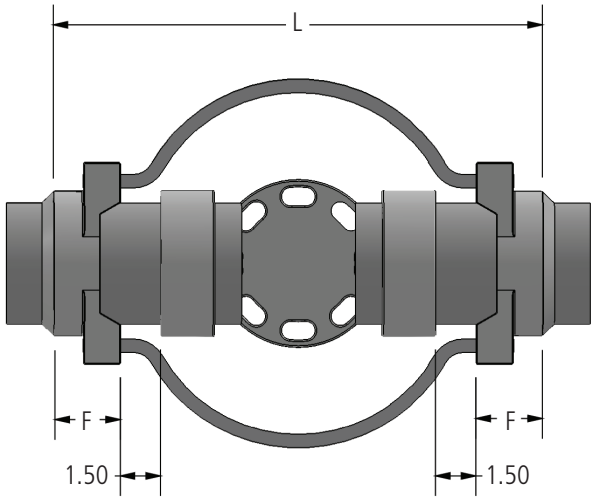

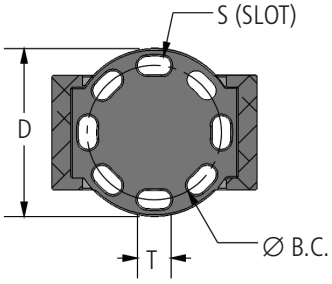

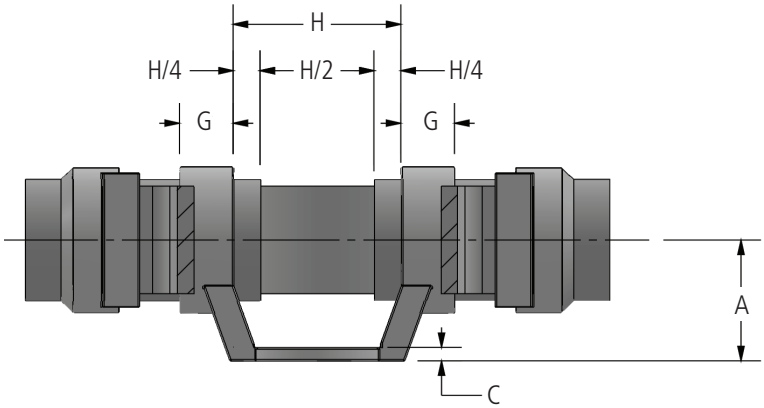

continued

© 2010, AFL, all rights reserved. PP-3-00590, Revision 1, 4.24.18
Specifications are subject to change without notice.

230 kV Aluminum Welded Bus Supports

DOSSERT®

TYPE WXBC-AA, WXBC-E-AA

Ordering Information

CATALOG NUMBER		SPS	DIMENSIONS IN INCHES									
SCHEDULE 40	SCHEDULE 80		A	B.C.	C	D	F	G	H	L	S	T
WXBC100-3-AA	WXBC100E-3-AA	1	2.00	3.00	0.38	4.25	1.50	1.25	4.50	13.00	0.56	0.81
WXBC125-3-AA	WXBC125E-3-AA	1 1/4	2.25	3.00	0.38	4.25	1.50	1.25	4.50	13.00	0.56	0.81
WXBC125-5-AA	WXBC125E-5-AA	1 1/4	2.38	5.00	0.38	6.25	1.50	1.25	6.25	14.75	0.69	1.06
WXBC150-3-AA	WXBC150E-3-AA	1 1/2	2.50	3.00	0.38	4.25	1.75	1.25	4.50	13.50	0.56	0.81
WXBC150-5-AA	WXBC150E-5-AA	1 1/2	2.50	5.00	0.38	6.25	1.75	1.25	6.25	15.25	0.69	1.06
WXBC200-3-AA	WXBC200E-3-AA	2	2.75	3.00	0.38	4.25	2.19	1.25	4.50	14.38	0.56	0.81
WXBC200-5-AA	WXBC200E-5-AA	2	2.75	5.00	0.38	6.25	2.19	1.25	6.25	16.13	0.69	1.06
WXBC200-7-AA	WXBC200E-7-AA	2	2.75	7.00	0.38	8.50	2.19	1.25	8.75	18.75	0.81	1.63
WXBC250-3-AA	WXBC250E-3-AA	2 1/2	3.13	3.00	0.38	4.25	2.19	1.25	4.50	14.38	0.56	0.81
WXBC250-5-AA	WXBC250E-5-AA	2 1/2	3.13	5.00	0.38	6.25	2.19	1.25	6.25	16.13	0.69	1.06
WXBC250-7-AA	WXBC250E-7-AA	2 1/2	3.13	7.00	0.38	8.50	2.19	1.25	8.75	18.75	0.81	1.63
WXBC300-3-AA	WXBC300E-3-AA	3	3.63	3.00	0.44	4.25	2.31	1.63	4.50	14.63	0.56	0.81
WXBC300-5-AA	WXBC300E-5-AA	3	3.63	5.00	0.50	6.25	2.31	1.63	6.25	16.38	0.69	1.06
WXBC300-7-AA	WXBC300E-7-AA	3	3.63	7.00	0.44	8.50	2.31	1.63	8.75	19.75	0.81	1.63
WXBC350-3-AA	WXBC350E-3-AA	3 1/2	4.00	3.00	0.50	4.25	2.31	1.25	4.50	14.63	0.56	0.81
WXBC350-5-AA	WXBC350E-5-AA	3 1/2	4.00	5.00	0.50	6.25	2.25	1.25	7.13	17.13	0.69	1.06
WXBC350-7-AA	WXBC350E-7-AA	3 1/2	4.00	7.00	0.50	6.25	2.25	1.25	8.75	19.75	0.81	1.63
WXBC350-5-S-AA	WXBC350E-5-S-AA	3 1/2	5.00	5.00	0.50	6.25	2.25	1.25	7.13	17.13	0.69	1.06
WXBC400-3-AA	WXBC400E-3-AA	4	4.50	3.00	0.50	4.25	2.50	2.00	4.50	15.50	0.56	0.81
WXBC400-5-AA	WXBC400E-5-AA	4	4.50	5.00	0.50	6.25	2.50	2.00	6.25	17.25	0.69	1.06
WXBC400-7-AA	WXBC400E-7-AA	4	4.50	7.00	0.50	8.50	2.50	2.00	8.75	20.50	0.81	1.63
WXBC500-3-AA	WXBC500E-3-AA	5	5.00	3.00	0.50	4.25	2.50	2.00	4.50	15.50	0.56	0.81
WXBC500-5-AA	WXBC500E-5-AA	5	5.00	5.00	0.50	6.25	2.50	2.00	6.25	18.25	0.69	1.06
WXBC500-7-AA	WXBC500E-7-AA	5	5.00	7.00	0.63	8.50	2.50	2.00	8.75	19.75	0.81	1.63
WXBC500-5-S-AA	WXBC500E-5-S-AA	5	4.88	5.00	0.50	6.25	2.50	2.00	6.25	17.25	0.69	1.06
WXBC600-3-AA	WXBC600E-3-AA	6	5.50	3.00	0.50	4.25	2.50	2.00	4.50	15.50	0.56	0.81
WXBC600-5-AA	WXBC600E-5-AA	6	5.50	5.00	0.50	6.25	2.50	2.00	6.25	19.75	0.69	1.06
WXBC600-7-AA	WXBC600E-7-AA	6	5.50	7.00	0.63	8.50	25.50	2.00	8.75	22.75	0.81	1.63
WXBC800R-5-AA	—	8 OD	6.38	5.00	0.63	6.25	3.00	2.00	8.50	21.50	0.69	1.06
WXBC800R-7-AA	—	8 OD	6.38	7.00	0.63	8.50	3.00	2.00	8.50	21.50	0.81	1.63

© 2010, AFL, all rights reserved. PP-3-00590, Revision 1, 4.23.18
Specifications are subject to change without notice.

230 kV Aluminum Welded Couplers

DOSSERT®

TYPE 14700

Straight Adapter Tube To Cable

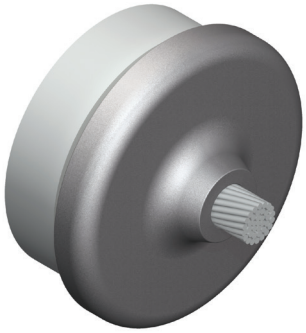

Adapter is designed to make inline connection between pipe and stranded cable. Cable is "puddle" welded to connector; connector is then welded to tube. Not recommended for use on ACSR conductors due to difficulty welding steel core.

Material

Aluminum Alloy

Notes

1. Table 1 shows physical characteristics of each catalog series.
2. Table 2 shows specific catalog numbers.

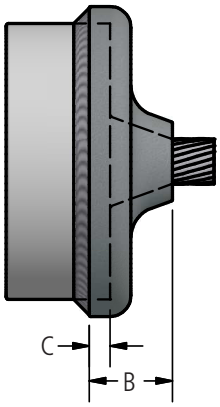

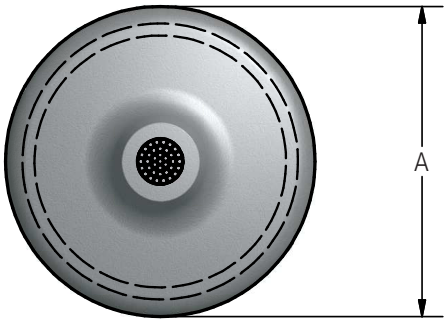

Ordering Instructions

1. Determine Catalog Number

   Determine the catalog number from Table 2 based on the bus conductor and the diameter of the stranded conductor being used.

   Ex: A straight adapter for a run conductor of 3" Sch 40 and a stranded conductor diameter of 0.926" the complete catalog number is : 14708.100

© 2010, AFL, all rights reserved. PP-3-00151, Revision 0, 11.09.10
Specifications are subject to change without notice.

DOSSERT®

TYPE 14700

Straight Adapter Tube To Cable

TABLE 1 (PHYSICAL CHARACTERISTICS BY SERIES)					
CATALOG NUMBER	SPS	DIMENSIONS IN INCHES			NOMINAL WEIGHT
		A	B	C	LBS
14702	3/4	1.50	1.19	0.19	0.12
14703	1	1.84	1.44	0.19	0.19
14704	1 1/4	2.19	2.00	0.25	0.50
14705	1 1/2	2.56	2.44	0.44	0.56
14706	2	2.97	2.44	0.44	0.56
14707	2 1/2	3.53	2.00	0.44	0.81
14708	3	4.22	2.00	0.44	1.20
14709	3 1/2	4.66	2.00	0.44	1.30
14710	4	5.22	2.00	0.50	1.50
14712	5	6.38	2.00	0.50	1.90
14713	6	7.44	2.00	0.50	2.60

Ordering Information

TABLE 2											
STANDARD CONDUCTOR DIAMETER RANGE INCH	CATALOG NUMBERS										
	RUN CONDUCTORS										
	3/4	1	1 1/4	1 1/2	2	2 1/2	3	3 1/2	4	5	6
.366-.394	14702.4	14703.4	14704.4	14705.4	14706.4	14707.4	14708.4	14709.4	14710.4	14712.4	14713.4
.395-.428	14702.44	14703.44	14704.44	14705.44	14706.44	14707.44	14708.44	14709.44	14710.44	14712.44	14713.44
.429-.459	14702.47	14703.47	14704.47	14705.47	14706.47	14707.47	14708.47	14709.47	14710.47	14712.47	14713.47
.460-.49	14702.5	14703.5	14704.5	14705.5	14706.5	14707.5	14708.5	14709.5	14710.5	14712.5	14713.5
.491-.521	14702.53	14703.53	14704.53	14705.53	14706.53	14707.53	14708.53	14709.53	14710.53	14712.53	14713.53
.522-.552	14702.56	14703.56	14704.56	14705.56	14706.56	14707.56	14708.56	14709.56	14710.56	14712.56	14713.56
.553-.599	14702.61	14703.61	14704.61	14705.61	14706.61	14707.61	14708.61	14709.61	14710.61	14712.61	14713.61
.600-.644	14702.66	14703.66	14704.66	14705.66	14706.66	14707.66	14708.66	14709.66	14710.66	14712.66	14713.66
.645-.691	-	14703.7	14704.7	14705.7	14706.7	14707.7	14708.7	14709.7	14710.7	14712.7	14713.7
.692-.738	-	14703.75	14704.75	14705.75	14706.75	14707.75	14708.75	14709.75	14710.75	14712.75	14713.75
.739-.800	-	14703.81	14704.81	14705.81	14706.81	14707.81	14708.81	14709.81	14710.81	14712.81	14713.81
.801-.863	-	14703.88	14704.88	14705.88	14706.88	14707.88	14708.88	14709.88	14710.88	14712.88	14713.88
.864-.925	-	-	14704.94	14705.94	14706.94	14707.94	14708.94	14709.94	14710.94	14712.94	14713.94
.926-.985	-	-	14704.1	14705.1	14706.1	14707.1	14708.1	14709.1	14710.1	14712.1	14713.1
.986-1.047	-	-	14704.106	14705.106	14706.106	14707.106	14708.106	14709.106	14710.106	14712.106	14713.106
1.048-1.110	-	-	14704.112	14705.112	14706.112	14707.112	14708.112	14709.112	14710.112	14712.112	14713.112
1.111-1.173	-	-	14704.119	14705.119	14706.119	14707.119	14708.119	14709.119	14710.119	14712.119	14713.119
1.174-1.235	-	-	14704.125	14705.125	14706.125	14707.125	14708.125	14709.125	14710.125	14712.125	14713.125
1.236-1.297	-	-	14704.131	14705.131	14706.131	14707.131	14708.131	14709.131	14710.131	14712.131	14713.131
1.298-1.360	-	-	14704.138	14705.138	14706.138	14707.138	14708.138	14709.138	14710.138	14712.138	14713.138
1.361-1.423	-	-	-	14705.144	14706.144	14707.144	14708.144	14709.144	14710.144	14712.144	14713.144
1.424-1.485	-	-	-	14705.15	14706.15	14707.15	14708.15	14709.15	14710.15	14712.15	14713.15
1.486-1.542	-	-	-	14705.156	14706.156	14707.156	14708.156	14709.156	14710.156	14712.156	14713.156

© 2010, AFL, all rights reserved. PP-3-00151, Revision 0, 11.09.10
Specifications are subject to change without notice.

230 kV Aluminum Welded Couplers

DOSSERT®
TYPE 15100

Reducer Connector For Pipe

Reducer connector is designed to connect unequal pipe sizes with minimum amount of trouble. Connector is welded on outside of pipe allowing use on both schedule 40 and schedule 80 pipe.

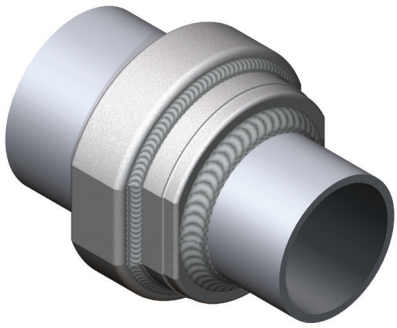

Material

Aluminum Alloy

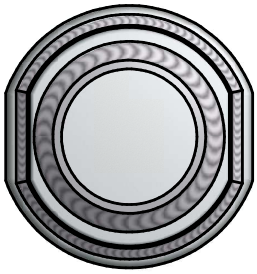

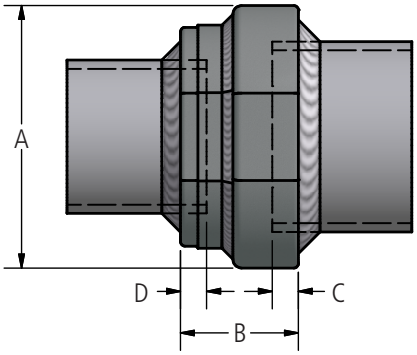

Ordering Information

CATALOG NUMBER	CONDUCTOR SIZE SCH40 & SCH80		DIMENSIONS IN INCHES				NOMINAL WEIGHT LBS
	RUN	BRANCH	A	B	C	D	
15103-2	1	3/4	1.88	0.84	0.15	0.19	0.20
15104-2	1 1/4	3/4	2.19	1.00	0.25	0.19	0.25
15104-3	1 1/4	1	2.19	1.09	0.25	0.19	0.29
15105-2	1 1/2	3/4	2.44	1.00	0.38	0.19	0.27
15105-3	1 1/2	1	2.44	1.09	0.38	0.19	0.33
15105-4	1 1/2	1 1/4	2.44	1.25	0.38	0.25	0.37
15106-2	2	3/4	2.94	1.12	0.44	0.19	0.39
15106-3	2	1	2.94	1.22	0.44	0.19	0.45
15106-4	2	1 1/4	2.94	1.38	0.44	0.25	0.49
15106-5	2	1 1/2	2.94	1.38	0.44	0.38	0.57
15107-2	2 1/2	3/4	3.50	1.19	0.44	0.19	0.52
15107-3	2 1/2	1	3.50	1.28	0.44	0.19	0.58
15107-4	2 1/2	1 1/4	3.50	1.44	0.44	0.25	0.62
15107-5	2 1/2	1 1/2	3.50	1.44	0.44	0.38	0.70
15107-6	2 1/2	2	3.50	1.56	0.44	0.44	0.82
15108-2	3	3/4	4.12	1.31	0.44	0.19	0.83
15108-3	3	1	4.12	1.41	0.44	0.19	0.89
15108-4	3	1 1/4	4.12	1.56	0.44	0.25	0.93
15108-5	3	1 1/2	4.12	1.56	0.44	0.38	1.00
15108-6	3	2	4.12	1.69	0.44	0.44	1.10
15108-7	3	2 1/2	4.12	1.75	0.44	0.44	1.30
15109-2	3.5	3/4	4.69	1.31	0.44	0.19	1.1
15109-3	3.5	1	4.69	1.41	0.44	0.19	1.1
15109-4	3.5	1 1/4	4.69	1.56	0.44	0.25	1.2
15109-5	3.5	1 1/2	4.69	1.56	0.44	0.38	1.3
15109-6	3.5	2	4.69	1.69	0.44	0.44	1.4
15109-7	3.5	2 1/2	4.69	1.75	0.44	0.44	1.5
15109-8	3.5	3	4.69	1.88	0.44	0.44	1.9

© 2010, AFL, all rights reserved. PP-3-00153, Revision 0, 11.09.10
Specifications are subject to change without notice.

DOSSERT®

TYPE 15100

Reducer Connector For Pipe

Ordering Information

CATALOG NUMBER	CONDUCTOR SIZE SCH40 & SCH80		DIMENSIONS IN INCHES				NOMINAL WEIGHT LBS.
	RUN	BRANCH	A	B	C	D	
15110-2	4	3/4	5.19	1.38	0.5	0.19	1.3
15110-3	4	1	5.19	1.47	0.5	0.19	1.3
15110-4	4	1 1/4	5.19	1.62	0.5	0.25	1.4
15110-5	4	1 1/2	5.19	1.62	0.5	0.44	1.5
15110-6	4	2	5.19	1.75	0.5	0.44	1.6
15110-7	4	2 1/2	5.19	1.81	0.5	0.44	1.7
15110-8	4	3	5.19	1.94	0.5	0.44	2.1
15110-9	4	3 1/2	5.19	1.94	0.5	0.44	2.3
15112-2	5	3/4	6.25	1.38	0.5	0.19	1.8
15112-3	5	1	6.25	1.47	0.5	0.19	1.8
15112-4	5	1 1/4	6.25	1.62	0.5	0.25	1.9
15112-5	5	1 1/2	6.25	1.62	0.5	0.38	2
15112-6	5	2	6.25	1.75	0.5	0.44	2.1
15112-7	5	2 1/2	6.25	1.81	0.5	0.44	2.2
15112-8	5	3	6.25	1.94	0.5	0.44	2.6
15112-9	5	3 1/2	6.25	1.94	0.5	0.44	2.8
15112-10	5	4	6.25	2	0.5	0.5	3.1
15113-2	6	7/9	7.38	1.38	0.5	0.19	2.4
15113-3	6	1	7.38	1.47	0.5	0.19	2.4
15113-4	6	1 1/4	7.38	1.62	0.5	0.25	2.5
15113-5	6	1 1/2	7.38	1.62	0.5	0.38	2.6
15113-6	6	2	7.38	1.75	0.5	0.44	2.7
15113-7	6	2 1/2	7.38	1.81	0.5	0.44	2.8
15113-8	6	3	7.38	1.94	0.5	0.44	3.2
15113-9	6	3 1/2	7.38	1.94	0.5	0.44	3.4
15113-10	6	4	7.38	2	0.5	0.5	3.7
15113-12	6	5	7.38	2	0.5	0.5	4.3

© 2010, AFL, all rights reserved. PP-3-00153, Revision 0, 11.09.10
Specifications are subject to change without notice.

230 kV Aluminum Welded Couplers

DOSSERT®

TYPE WS-AA, WS-E-AA

Aluminum Welded Coupler

A shorter version of the Type WWC coupler, also made to special lengths.

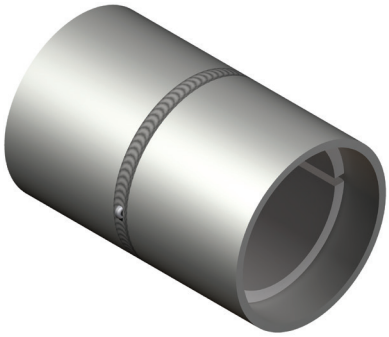

Material

Aluminum Tubing

Notes

1. To order special lengths, add desired (L) dimension to the catalog number. Example: WS500-15-AA for 15 inch coupler.

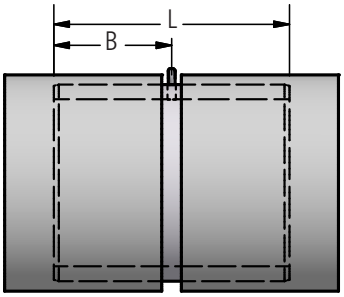

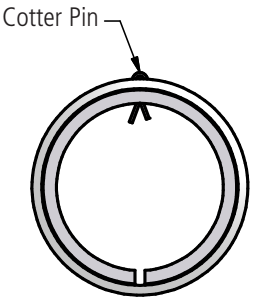

Ordering Information

CATALOG NUMBER		NOMINAL PIPE SIZE	DIMENSIONS IN INCHES	
SCH 40	SCH 80		B	L
WS100-AA	WS100E-AA	1	1-3/4	3-1/2
WS125-AA	WS125E-AA	1-1/4	2	4
WS150-AA	WS150E-AA	1-1/2	2	4
WS200-AA	WS200E-AA	2	2	4
WS250-AA	WS250E-AA	2-1/2	3	6
WS300-AA	WS300E-AA	3	3	6
WS350-AA	WS350E-AA	3-1/2	3	6
WS400-AA	WS400E-AA	4	3	6
WS450-AA	WS450E-AA	4-1/2	3	6
WS500-AA	WS500E-AA	5	3	6
WS600-AA	WS600E-AA	6	3	6
WS800-AA	WS800E-AA	8	3	6
WS1000-AA	WS1000E-AA	10	3	6

© 2010, AFL, all rights reserved. PP-3-00545, Revision 0, 11.09.10
Specifications are subject to change without notice.

DOSSERT®

TYPE WSXL-SI-AA

Aluminum To Bronze Angular Expansion Connector

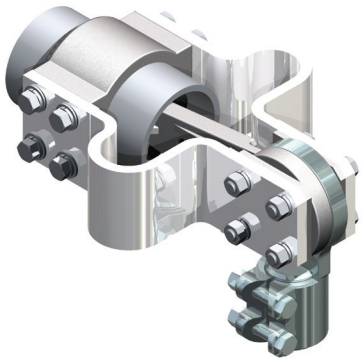

Expansion connector is designed for expansion and contraction in long bus runs. Stud connector can be adjusted to suit customers application.

Material

Aluminum Alloy

Hardware

Stainless steel nuts, bolts and belleville washers on aluminum bus.

Notes

For a custom thread count change the number after the "T" in the catalog number. Ex:WSXL200C-350-SI-T0-AA

Additional sizes are available.

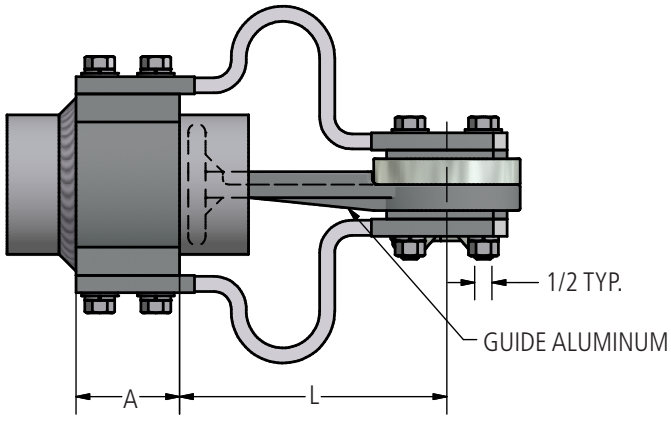

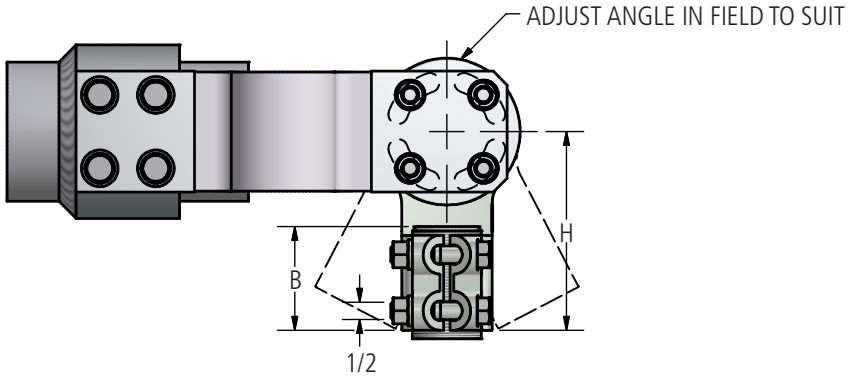

Ordering Information

STUD (S)	SPS	CATALOG NUMBER	DIMENSIONS IN INCHES			
			A	B	H	L
2"-12	2	WSXL200C-350-SI-T12-AA	3	2 3/4	5 3/4	7 3/4
2"-12	4E*	WSXL200C-400E-SI-T12-AA	3	2 3/4	5 3/4	9 5/16
3"-12	4E*	WSXL300C-400E-SI-T12-AA	3	3	6 5/8	9 5/16

* Suffix E indicates SCH 80.

© 2010, AFL, all rights reserved. PP-3-00546, Revision 0, 11.09.10
Specifications are subject to change without notice.

230 kV Aluminum Welded Couplers

DOSSERT®

TYPE WWC-AA, WWC-E-AA

Aluminum Welded Coupler

Coupler is designed to make connections with high mechanical strength and high electrical conductivity.



Material

Aluminum Alloy

Notes

- For pipe sizes greater than 6 inch or special I.D. and O.D. applications, please contact AFL.

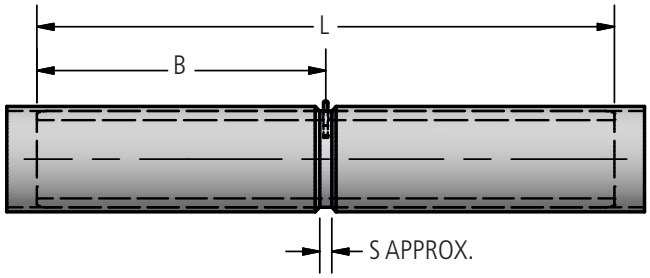

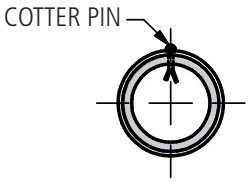

Ordering Information

CATALOG NUMBER		SPS	DIMENSIONS IN INCHES		
SCHEDULE 40	SCHEDULE 80		B	L	S
WWC75-AA	WWC75E-AA	3/4	2-1/4	4-1/2	1/4
WWC100-AA	WWC100E-AA	1	3	6	1/4
WWC125-AA	WWC125E-AA	1-1/4	3-3/4	7-1/2	3/8
WWC150-AA	WWC150E-AA	1-1/2	4-1/2	9	3/8
WWC200-AA	WWC200E-AA	2	6	12	3/8
WWC250-AA	WWC250E-AA	2-1/2	7-1/2	15	1/2
WWC300-AA	WWC300E-AA	3	9	18	1/2
WWC350-AA	WWC350E-AA	3-1/2	10-1/2	21	1/2
WWC400-AA	WWC400E-AA	4	12	24	1/2
WWC450-AA	WWC450E-AA	4-1/2	12	24	1/2
WWC500-AA	WWC500E-AA	5	12	24	1/2
WWC600-AA	WWC600E-AA	6	12	24	5/8
WWC600-5/8-AA	—	6 - 5/8 WALL	12.00	24.00	0.63
WWC600R38-AA	—	6 OD 3/8 WALL	19	38	5/8
WWC800-AA	WWC800E-AA	8	12	24	5/8
WWC800R38-AA	—	8 OD 3/8 WALL	19	38	5/8
WWC800R-AA	—	8 OD 1/2 WALL	12	24	5/8
WWC800R9/32-AA	—	8 OD 9/32 WALL	12.00	24.00	0.63

© 2010, AFL, all rights reserved. PP-3-00575, Revision 1, 5.10.18
Specifications are subject to change without notice.

DOSSERT®

TYPE WWCR-AA, WWCR-E-AA

Reducing Coupler



A reducing coupler for joining aluminum pipe of different diameters. Provides maximum structural reinforcement at the joint as well as a neat and corona free installation. Pipe is easily aligned and held during welding.

Material

Aluminum-Silicon Alloy

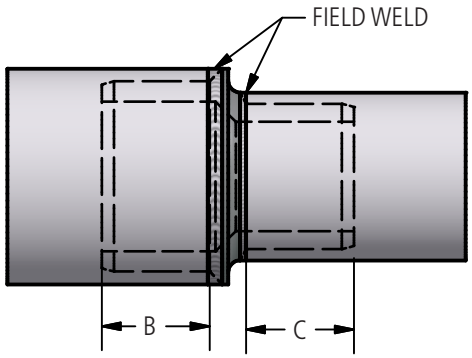

Ordering Information

CATALOG NUMBER		SPS		DIMENSIONS IN INCHES	
SCHEDULE 40	SCHEDULE 80	RUN	TAP	B	C
WWCR125-100-AA	WWCR125E-100-AA	1-1/4	1	1	3/4
WWCR150-100-AA	WWCR150E-100-AA	1-1/2	1	1	3/4
WWCR150-125-AA	WWCR150E-125-AA	1-1/2	1-1/4	1	1
WWCR200-100-AA	WWCR200E-100-AA	2	1	1-1/4	3/4
WWCR200-125-AA	WWCR200E-125-AA	2	1-1/4	1-1/4	1
WWCR200-150-AA	WWCR200E-150-AA	2	1-1/2	1-1/4	1
WWCR250-125-AA	WWCR250E-125-AA	2-1/2	1-1/4	1-1/2	1
WWCR250-150-AA	WWCR250E-150-AA	2-1/2	1-1/2	1-1/2	1
WWCR250-200-AA	WWCR250E-200-AA	2-1/2	2	1-1/2	1-1/4
WWCR300-100-AA	WWCR300E-100-AA	3	1	1-3/4	3/4
WWCR300-150-AA	WWCR300E-150-AA	3	1-1/2	1-3/4	1
WWCR300-200-AA	WWCR300E-200-AA	3	2	1-3/4	1-1/4
WWCR300-250-AA	WWCR300E-250-AA	3	2-1/2	1-3/4	1-1/2
WWCR350-200-AA	WWCR350E-200-AA	3-1/2	2	1-3/4	1-1/4
WWCR400-200-AA	WWCR400E-200-AA	4	2	2-1/4	1-1/4
WWCR400-250-AA	WWCR400E-250-AA	4	2-1/2	2-1/4	1-1/2
WWCR400-300-AA	WWCR400E-300-AA	4	3	2-1/4	1-3/4
WWCR450-400-AA	WWCR450E-400-AA	4-1/2	4	2-1/2	2-1/4
WWCR500-250-AA	WWCR500E-250-AA	5	2-1/2	2-3/4	1-1/2
WWCR500-300-AA	WWCR500E-300-AA	5	3	2-3/4	1-3/4
WWCR500-400-AA	WWCR500E-400-AA	5	4	2-3/4	2-1/4
WWCR500-350-AA	WWCR500E-350-AA	5	3-1/2	2-3/4	2
WWCR600-300-AA	WWCR600E-300-AA	6	3	3	1-3/4
WWCR600-400-AA	WWCR600E-400-AA	6	4	3	2-1/4
WWCR600-500-AA	WWCR600E-500-AA	6	5	3	2-3/4
WWCR800-400-AA	WWCR800E-400-AA	8	4	4	2-1/4
WWCR800-500-AA	WWCR800E-500-AA	8	5	4	2-3/4
WWCR800-600-AA	WWCR800E-600-AA	8	6	4	3-1/4

© 2010, AFL, all rights reserved. PP-3-00577, Revision 0, 11.09.10
Specifications are subject to change without notice.

230 kV Aluminum Welded Couplers

DOSSERT®

TYPE WWSC-AA

Weldment Spherical Coupler

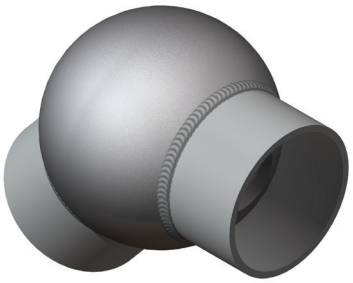

WWSC-AA is a variable angle coupler for aluminum pipe conductor.

Material

Aluminum Alloy

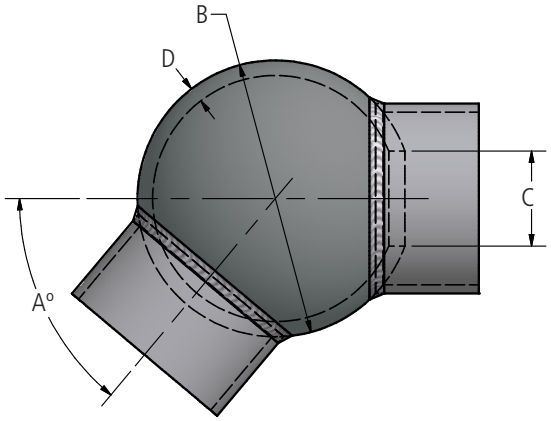

Ordering Information

CATALOG NUMBER	SPS	DIMENSIONS IN INCHES				MAX KV
		A° (MAX)	B	C	D	
WWSC500-AA	1 1/2	130	5	1 3/4	5/16	230
WWSC500-AA	2	115	5	1 3/4	5/16	230
WWSC500-AA	2 1/2	105	5	1 3/4	5/16	230
WWSC500-AA	3	90	5	1 3/4	5/16	230
WWSC500-AA	3 1/2	80	5	1 3/4	5/16	230
WWSC500-AA	4	50	5	1 3/4	5/16	230
WWSC800-AA	3 THROUGH 5	90	8	2 3/4	7/16	345
WWSC800-AA	6	60	8	2 3/4	7/16	345
WWSC800-AA	8 OD	40	8	2 3/4	7/16	345
WWSC1200-AA	3	140	12	2 3/4	3/8	500
WWSC1200-AA	3 1/2	135	12	2 3/4	3/8	500
WWSC1200-AA	4	130	12	2 3/4	3/8	500
WWSC1200-AA	5	120	12	2 3/4	3/8	500
WWSC1200-AA	6	100	12	2 3/4	3/8	500
WWSC1200-AA	8 OD	90	12	2 3/4	3/8	500

© 2010, AFL, all rights reserved. PP-3-00579, Revision 0, 12.14.10
Specifications are subject to change without notice.

DOSSERT®

TYPE XWWC-AA, XWWC-E-AA

Bus Expansion Coupler

Expansion coupler for aluminum pipe connections. Provided with alignment guide for field welds.

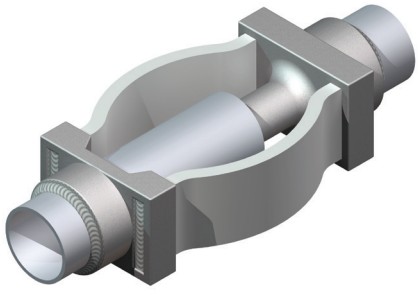

Material

Aluminum Alloy

Notes

1. If alignment guide is not required, add "P" to the catalog number prefix. EX: XWWCP100-AA.
2. For Dimension "E", refer to pages 11-12 in the General Information section.

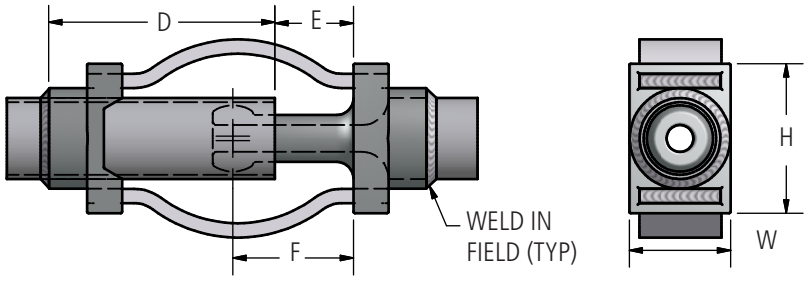

FIG. 1

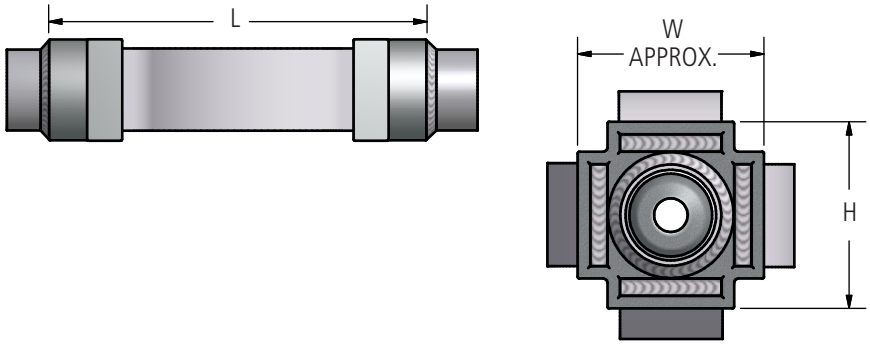

FIG. 2

Ordering Information

CATALOG NUMBER		SPS	FIG. NO.	DIMENSIONS IN INCHES				
SCH 40	SCH 80			D	F	H	L	W
XWWC100-AA	XWWC100E-AA	1	1	5 3/4	3 1/4	3	8 9/16	1 3/4
XWWC125-AA	XWWC125E-AA	1 1/4	1	6 3/4	3 1/4	3 1/4	9 1/2	2
XWWC150-AA	XWWC150E-AA	1 1/2	1	7 1/4	3 1/2	3 1/2	10 5/16	2 1/4
XWWC200-AA	XWWC200E-AA	2	1	7 7/16	4 3/4	3 3/4	11 3/4	3 13/16
XWWC250-AA	XWWC250E-AA	2 1/2	1	8 7/16	4 3/4	5 5/16	12 13/16	3 13/16
XWWC300-AA	XWWC300E-AA	3	1	8 3/8	5 9/16	6 1/4	13 13/16	3 13/16
XWWC350-AA	XWWC350E-AA	3 1/2	1	10	4 3/4	6 13/16	14 7/8	3 13/16
XWWC400-AA	XWWC400E-AA	4	2	10 7/16	4 3/4	7 1/8	15 13/16	7 1/8
XWWC500-AA	XWWC500E-AA	5	1	11 1/8	6 5/8	9 1/8	17 1/8	6 1/16
XWWC600-AA	XWWC600E-AA	6	2	11 1/8	6 5/8	9 9/16	18	9 9/16

© 2010, AFL, all rights reserved. PP-3-00599, Revision 3, 11.5.18
Specifications are subject to change without notice.

230 kV Aluminum Welded Couplers

DOSSERT®
TYPE XWWCT-AA

Expansion Coupler

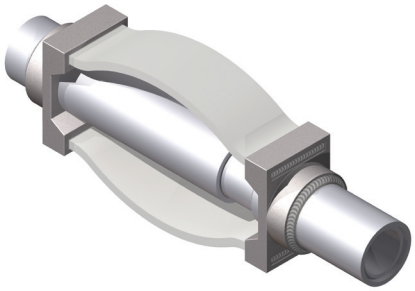

Expansion coupler is designed to compensate for expansion and contraction in long bus runs. An extruded pipe is provided to be field welded in place and provides alignment of bus.

Material

Aluminum Alloy

Notes

1. For dimension "E", refer to pages 11-12 in the General Information section.

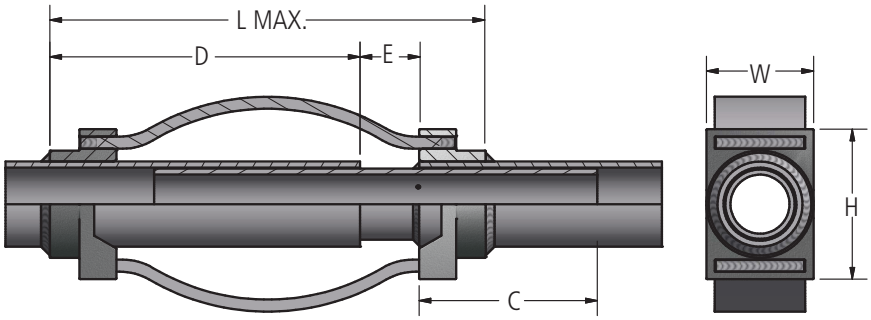

Ordering Information

CATALOG NUMBER		SPS / EHPS	DIMENSIONS IN INCHES				
SCH 40	SCH 80		C	D	H	L	W
XWWCT200-AA	XWWCT200E-AA	2	5 1/2	10 1/2	4 3/4	17 3/8	3 3/4
XWWCT250-AA	XWWCT250E-AA	2 1/2	6	10 1/2	5 1/16	17 1/2	3 5/8
XWWCT300-AA	XWWCT300E-AA	3	6 1/2	10 1/2	6 1/4	17 1/2	3 13/16
XWWCT350-AA	XWWCT350E-AA	3 1/2	7	10 1/2	6 7/8	17 1/2	3 11/16
XWWCT400-AA	XWWCT400E-AA	4	7 1/2	10 1/2	7 7/16	18	4 15/16
XWWCT500-AA	XWWCT500E-AA	5	8	10 1/2	9 1/8	18	6 1/16
XWWCT600-AA	XWWCT600E-AA	6	8	10 3/4	10	18	6 9/16

© 2011, AFL, all rights reserved. PP-3-00600, Revision 3, 6.9.2022
Specifications are subject to change without notice.

DOSSERT®

TYPE WCX-AA

Aluminum Welded, External Fit End Plug

External fit end plug for aluminum pipe or tube. End bell is inserted onto pipe and field welded. Good for both Schedule 40 and 80 sizes.

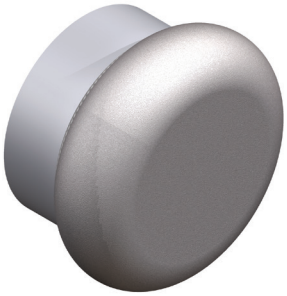

Material

Aluminum Alloy

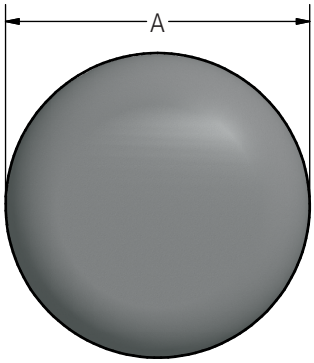

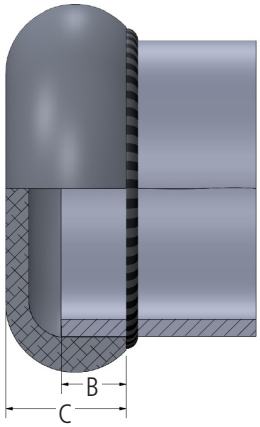

Ordering Information

CATALOG NUMBER	SPS	DIMENSIONS IN INCHES		
		A	B	C
WCX75-AA	3/4	1 1/2	7/16	5/8
WCX100-AA	1	1 7/8	7/16	5/8
WCX125-AA	1 1/4	2 1/4	1/2	3/4
WCX150-AA	1 1/2	2 11/32	3/8	25/32
WCX200-AA	2	3	15/32	7/8
WCX250-AA	2 1/2	3 23/32	19/32	1 1/8
WCX300-AA	3	4 3/8	25/32	1 1/2
WCX350-AA	3 1/2	4 31/32	13/16	1 5/8
WCX400-AA	4	5 5/8	29/32	1 7/8
WCX500-AA	5	6 23/32	1 1/8	2 7/32
WCX600-AA	6	7 7/8	1 11/32	2 7/16

© 2023, AFL, all rights reserved. PP-3-00885, Revision, 0, 7.6.2023
Specifications are subject to change without notice.

230 kV Aluminum Welded End Bells

DOSSERT®

TYPE WCI-AA, WCI-E-AA

Aluminum Welded, Internal Fit, Corona / End Bell



Internal fit corona or end bell for aluminum pipe or tube. Bell is inserted into pipe end and field welded.

Material

Aluminum Alloy

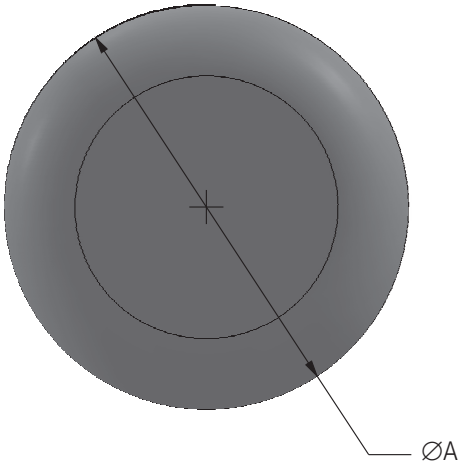

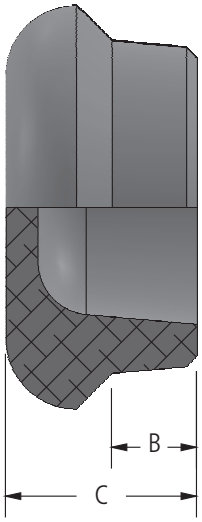

Ordering Information

CATALOG NUMBER		SPS	DIMENSIONS IN INCHES		
SCH 40	SCH 80		A	B	C
WCI75-AA	WCI75E-AA	3/4	1-1/16	7/16	7/8
WCI100-AA	WCI100E-AA	1	1-5/16	7/16	7/8
WCI125-AA	WCI125E-AA	1-1/4	1-21/32	1/2	1
WCI150-AA	WCI150E-AA	1-1/2	1-29/32	1/2	1-1/8
WCI200-AA	WCI200E-AA	2	2-3/8	1/2	1-1/8
WCI250-AA	WCI250E-AA	2-1/2	2-7/8	5/8	1-3/8
WCI300-AA	WCI300E-AA	3	3-1/2	1	2-1/8
WCI350-AA	WCI350E-AA	3-1/2	4	1	2
WCI400-AA	WCI400E-AA	4	4-1/2	1	2
WCI500-AA	WCI500E-AA	5	5-9/16	1-1/4	2-1/4
WCI600-AA	WCI600E-AA	6	6-5/8	1-1/4	2-1/4
WCI600-5/8-AA	—	6	6-5/8	1	2
WCI800-AA	WCI800E-AA	8	8-5/8	1	2-1/4

© 2010, AFL, all rights reserved. PP-3-00521, Revision 2, 10.17.2022
Specifications are subject to change without notice.

DOSSERT®

TYPE WP-AA, WP-E-AA

Aluminum Welded, Internal Fit, End Plug



Internal fit end plug for aluminum pipe or tube. End plug is inserted into pipe and field welded.

Material

Aluminum Alloy

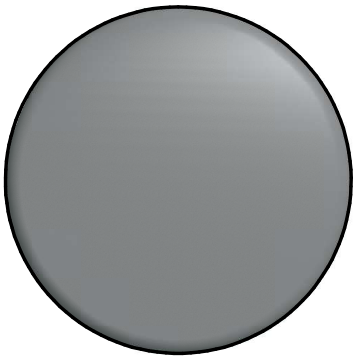

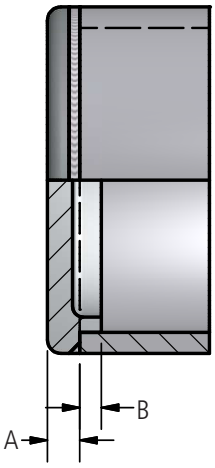

Ordering Information

CATALOG NUMBER		SPS	DIMENSIONS IN INCHES	
SCH 40	SCH 80		A	B
WP150-AA	WP150E-AA	1 1/2	1/4	3/16
WP200-AA	WP200E-AA	2	1/4	3/16
WP250-AA	WP250E-AA	2 1/2	1/4	3/16
WP300-AA	WP300E-AA	3	1/4	3/16
WP350-AA	WP350E-AA	3 1/2	1/4	3/16
WP400-AA	WP400E-AA	4	1/4	3/16
WP500-AA	WP500E-AA	5	3/8	1/4
WP600-AA	WP600E-AA	6	3/8	1/4
WP800-AA	WP800E-AA	8	3/8	1/4

© 2010, AFL, all rights reserved. PP-3-00529, Revision 0, 12.20.10
Specifications are subject to change without notice.

DOSSERT®

TYPE WEPI-AA, WEPI-30-AA, WEPI-45-AA, WEPI-60-AA

Aluminum Welded Pipe Elbow

Welded elbows offer an economical method for field fabrication where angular turns are required. Designed for 230 kV service. Elbows are designed with chamfer to provide ease of welding.



WEPI-AA

Material

Aluminum Alloy

Notes

- For a 30°, add '-30'; for a 45°, add '-45'; and for a 60°, add '-60' to catalog number. Ex: WEPI75-45-AA
- For Schedule 80, add 'E' to pipe size. Ex: WEPI75E-AA

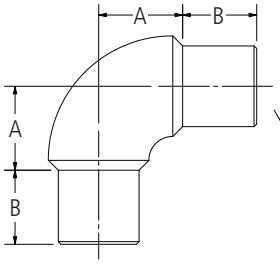

WEPI-AA

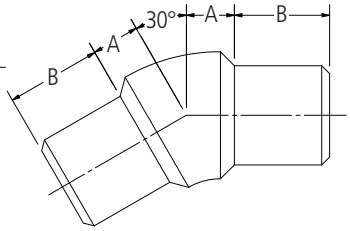

WEPI-30-AA

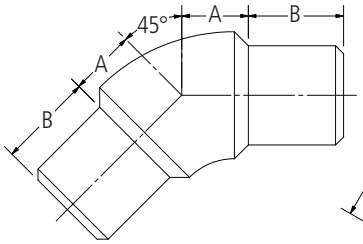

WEPI-45-AA

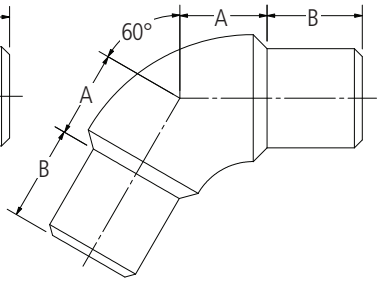

WEPI-60-AA

Ordering Information

S.P.S.	CATALOG NO. SCHEDULE 40	ANGLE	DIMENSION IN INCHES A	DIMENSION IN INCHES B	E.H.P.S.	CATALOG NO. SCHEDULE 80	ANGLE	DIMENSION IN INCHES A	DIMENSION IN INCHES B
3/4	WEPI75-AA	90°	1.11	0.75	3/4	WEPI75E-AA	90°	1.00	0.75
3/4	WEPI75-30-AA	30°	0.38	0.75	—	—	—	—	—
3/4	WEPI75-45-AA	45°	0.52	0.75	3/4	WEPI75E-45-AA	45°	0.56	0.75
3/4	WEPI75-60-AA	60°	0.69	0.75	—	—	—	—	—
1	WEPI100-AA	90°	1.19	0.75	1	WEPI100E-AA	90°	1.23	0.75
1	WEPI100-30-AA	30°	0.44	0.75	1	WEPI100E-30-AA	30°	0.48	0.75
1	WEPI100-45-AA	45°	0.58	0.75	1	WEPI100E-45-AA	45°	0.63	0.75
1	WEPI100-60-AA	60°	0.75	0.75	1	WEPI100E-60-AA	60°	0.80	0.75
1 1/4	WEPI125-AA	90°	1.38	1.00	1 1/4	WEPI125E-AA	90°	1.42	1.00
1 1/4	WEPI125-30-AA	30°	0.50	1.00	1 1/4	WEPI125E-30-AA	30°	0.56	1.00
1 1/4	WEPI125-45-AA	45°	0.68	1.00	1 1/4	WEPI125E-45-AA	45°	0.73	1.00
1 1/4	WEPI125-60-AA	60°	0.87	1.00	1 1/4	WEPI125E-60-AA	60°	0.92	1.00
1 1/2	WEPI150-AA	90°	1.57	1.00	1 1/2	WEPI150E-AA	90°	1.63	1.00
1 1/2	WEPI150-30-AA	30°	0.56	1.00	1 1/2	WEPI150E-30-AA	30°	0.63	1.00
1 1/2	WEPI150-45-AA	45°	0.76	1.00	1 1/2	WEPI150E-45-AA	45°	0.83	1.00
1 1/2	WEPI150-60-AA	60°	0.99	1.00	1 1/2	WEPI150E-60-AA	60°	1.05	1.00

© 2010, AFL, all rights reserved. PP-3-00523, Revision 5, 11.3.2022
Specifications are subject to change without notice.

DOSSERT®

TYPE WEPI-AA, WEPI-30-AA, WEPI-45-AA, WEPI-60-AA

Aluminum Welded Pipe Elbow

Ordering Information

S.P.S.	CATALOG NO.	ANGLE	DIMENSION IN INCHES		E.H.P.S.	CATALOG NO.	ANGLE	DIMENSION IN INCHES	
	SCHEDULE 40		A	B		SCHEDULE 80		A	B
2	WEPI200-AA	90°	1.92	1.75	2	WEPI200E-AA	90°	1.98	1.75
2	WEPI200-30-AA	30°	0.64	1.75	2	WEPI200E-30-AA	30°	0.70	1.75
2	WEPI200-45-AA	45°	0.89	1.75	2	WEPI200E-45-AA	45°	0.96	1.75
2	WEPI200-60-AA	60°	1.17	1.75	2	WEPI200E-60-AA	60°	1.24	1.75
2 1/2	WEPI250-AA	90°	2.51	1.75	2 1/2	WEPI250E-AA	90°	2.54	1.75
2 1/2	WEPI250-30-AA	30°	0.78	1.75	2 1/2	WEPI250E-30-AA	30°	0.84	1.75
2 1/2	WEPI250-45-AA	45°	1.08	1.75	2 1/2	WEPI250E-45-AA	45°	1.14	1.75
2 1/2	WEPI250-60-AA	60°	1.42	1.75	2 1/2	WEPI250E-60-AA	60°	1.46	1.75
3	WEPI300-AA	90°	2.52	1.75	3	WEPI300E-AA	90°	2.56	1.75
3	WEPI300-30-AA	30°	0.89	1.75	3	WEPI300E-30-AA	30°	0.96	1.75
3	WEPI300-45-AA	45°	1.23	1.75	3	WEPI300E-45-AA	45°	1.31	1.75
3	WEPI300-60-AA	60°	1.52	1.75	3	WEPI300E-60-AA	60°	1.56	1.75
3 1/2	WEPI350-AA	90°	2.87	1.75	3 1/2	WEPI350E-AA	90°	2.96	1.75
3 1/2	WEPI350-30-AA	30°	0.95	1.75	3 1/2	WEPI350E-30-AA	30°	1.04	1.75
3 1/2	WEPI350-45-AA	45°	1.33	1.75	3 1/2	WEPI350E-45-AA	45°	1.42	1.75
3 1/2	WEPI350-60-AA	60°	1.76	1.75	3 1/2	WEPI350E-60-AA	60°	1.85	1.75
4	WEPI400-AA	90°	3.02	2.06	4	WEPI400E-AA	90°	3.08	2.06
4	WEPI400-30-AA	30°	1.12	2.00	4	WEPI400E-30-AA	30°	1.23	2.00
4	WEPI400-45-AA	45°	1.60	2.00	4	WEPI400E-45-AA	45°	1.70	2.00
4	WEPI400-60-AA	60°	1.81	2.06	4	WEPI400E-60-AA	60°	1.87	2.06
5	WEPI500-AA	90°	3.82	2.44	5	WEPI500E-AA	90°	3.94	2.44
5	WEPI500-30-AA	30°	1.24	2.44	5	WEPI500E-30-AA	30°	1.35	2.44
5	WEPI500-45-AA	45°	1.75	2.44	5	WEPI500E-45-AA	45°	1.87	2.44
5	WEPI500-60-AA	60°	2.33	2.44	5	WEPI500E-60-AA	60°	2.45	2.44
6	WEPI600-AA	90°	4.31	2.75	6	WEPI600E-AA	90°	4.38	2.75
6	WEPI600-30-AA	30°	1.29	2.75	6	WEPI600E-30-AA	30°	1.36	2.75
6	WEPI600-45-AA	45°	1.89	2.75	6	WEPI600E-45-AA	45°	1.97	2.75
6	WEPI600-60-AA	60°	2.57	2.75	6	WEPI600E-60-AA	60°	2.64	2.75
8	WEPI800-AA	90°	5.64	1.00	—	—	—	—	—
8" O.D.	WEPI800R-AA	90°	5.50	2.00	—	—	—	—	—
8" O.D.	WEPI800R-30-AA	30°	1.88	2.00	—	—	—	—	—
8" O.D.	WEPI800R-60-AA	60°	3.38	1.00	—	—	—	—	—

© 2010, AFL, all rights reserved. PP-3-00523, Revision 5, 11.3.2022
Specifications are subject to change without notice.

DOSSERT®

TYPE WGPH-AA

Welded Extensions Connector



Material

Aluminum Alloy

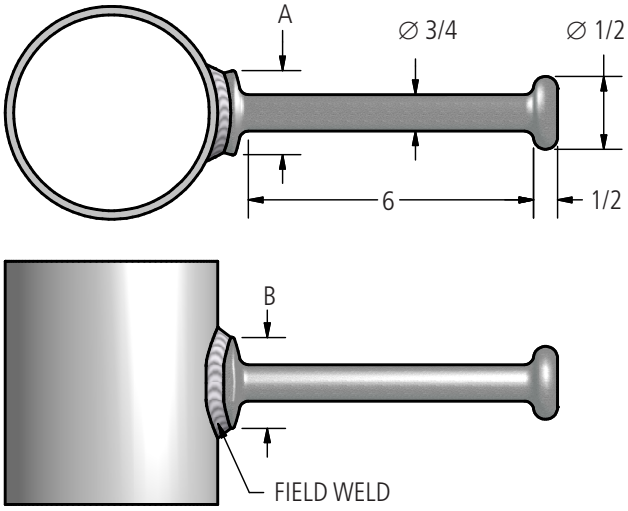

Ordering Information

CATALOG NUMBER	SPS RANGE	DIMENSIONS IN INCHES	
		A	B
WGPH250-AA	1 - 2 1/2	7/8	1 1/2
WGPH600-AA	3 - 6	1 1/2	2

© 2010, AFL, all rights reserved. PP-3-00525, Revision 1, 9.16.13
Specifications are subject to change without notice.

DOSSERT®

TYPE WTC-N-AA

Welded Tee to Flat

For welding a two, four, or six hole NEMA pad to a pipe.

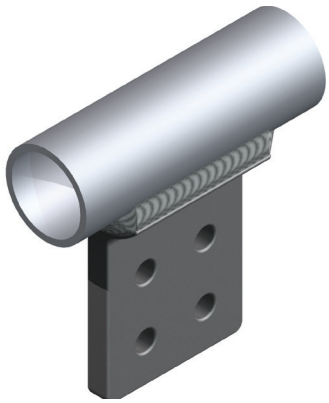

Material

Aluminum Alloy

Notes

- For Undrilled holes on pad, add "-U" to catalog number. EX: WTC250-2NU-AA
- For Finish surface on both sides of pad, add "-F" to catalog number. EX: WTC250-2NF-AA.

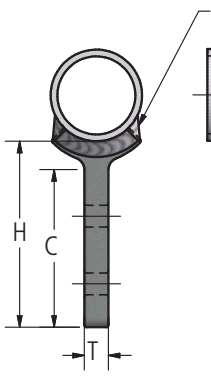

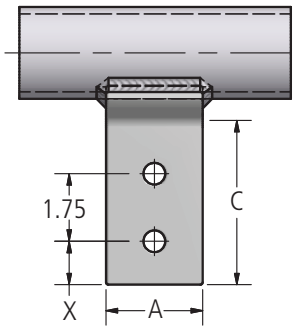

FIG. 1

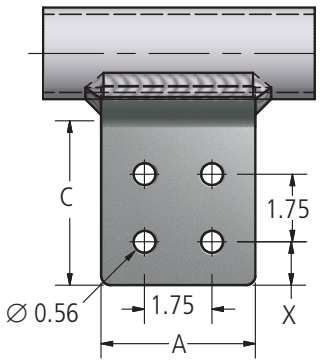

FIG. 2

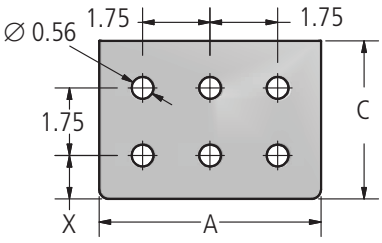

FIG. 3

Ordering Information

CATALOG NUMBER	SPS RANGE	FIG. NO.	DIMENSIONS IN INCHES				
			A	C	H	T	X
WTC250-2N-AA	1 THRU 2 1/2	1	2.00	3.25	3.88	0.50	0.63
WTC250-4N-AA	1 THRU 2 1/2	2	3.00	3.25	3.88	0.50	0.63
WTC250-4N4-AA	1 THRU 2 1/2	2	4.00	4.25	4.88	0.63	1.13
WTC600-2N-AA	3 THRU 6	1	2.00	3.25	4.00	0.75	0.63
WTC 600-4N-AA	3 THRU 6	2	3.00	3.25	4.00	0.75	0.63
WTC 600-4N4-AA	3 THRU 6	2	4.00	4.25	5.00	0.75	1.13
WTC 600-6N4-AA	3 THRU 6	3	6.00	4.00	5.00	0.75	1.13
WTC800-4N4-AA	8	2	4.00	4.25	5.00	0.75	1.13
WTC800R-2N-AA	8" OD	1	2.00	4.25	5.11	0.75	0.75
WTC800R-4N4-AA	8" OD	2	4.00	4.25	5.00	0.75	1.13

© 2010, AFL, all rights reserved. PP-3-00550, Revision 2, 1.30.19
Specifications are subject to change without notice.

DOSSERT®

TYPE WTF-AA

Perpendicular Pipe Tap

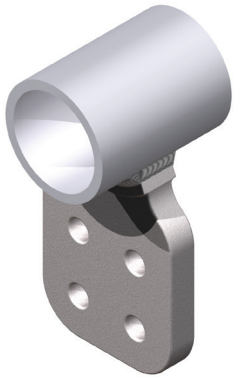

Transverse tee taps are designed to provide terminal connections in span on tubular bus. Pads have contact surfaces on both sides. Pads conform to NEMA standards.

Material

Aluminum Alloy

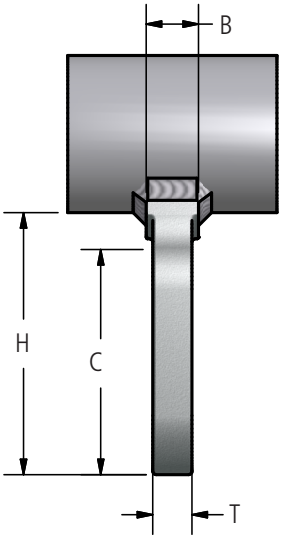

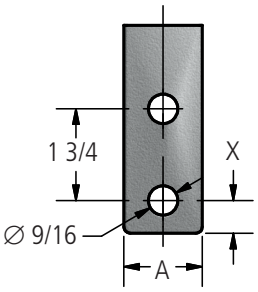

FIG. 1

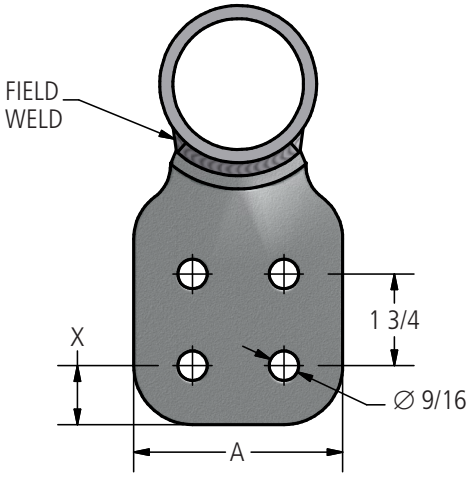

FIG. 2

Ordering Information

CATALOG NUMBER	SPS		FIG. NO.	DIMENSIONS IN INCHES					
	MIN	MAX		A	B	C	H	T	X
WTF250-2N-AA	1	2-1/2	1	2	7/8	3-1/8	3-3/4	1/2	5/8
WTF250-4N-AA	1	2-1/2	2	3	7/8	3-1/8	3-3/4	1/2	5/8
WTF250-4N4-AA	1	2-1/2	2	4	7/8	4-1/8	4-3/4	1/2	1-1/8
WTF600-2N-AA	3	6	1	2	1	3-1/8	3-3/4	3/4	5/8
WTF600-4N-AA	3	6	2	3	1	3-1/8	3-3/4	3/4	5/8
WTF600-4N4-AA	3	6	2	4	1	4-1/8	4-3/4	3/4	1-1/8

© 2010, AFL, all rights reserved. PP-3-00553, Revision 1, 9.16.13
Specifications are subject to change without notice.

DOSSERT®

TYPE 1000 SERIES

Tube to Cable Tee Adapter

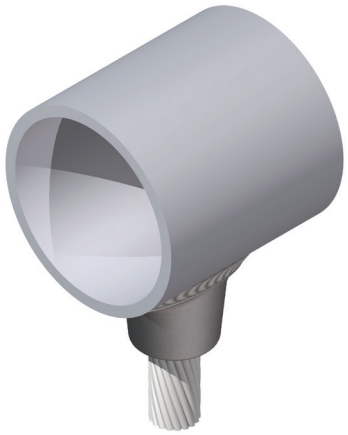

Tee adapter is designed with saddle to allow connector to be clamped to bus tube during field welding. Stranded conductor is puddle welded to connector, then connector is welded to bus tube. Not recommended for use on ACSR conductors due to difficulty welding steel core.

Material

Aluminum Alloy

Ordering Instructions

Step 1: Determine Catalog Number

Determine the catalog number from Table 2 based on the bus conductor and the diameter of the stranded conductor being used.

Example: A tee adapter for a run conductor of 3" schedule 40 and a stranded conductor diameter of 0.926", the complete catalog number is: 1006.100

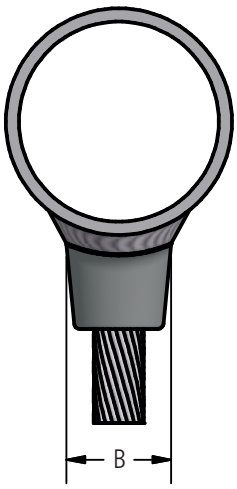

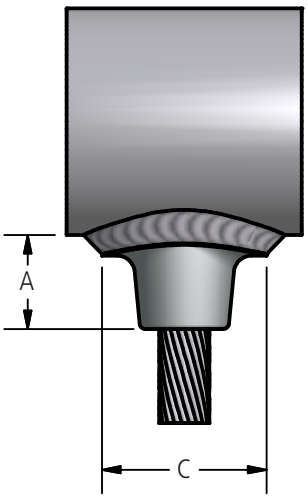

© 2010, AFL, all rights reserved. PP-3-00148, Revision 0, 12.21.10
Specifications are subject to change without notice.

DOSSERT®

TYPE 1000 SERIES

Tube to Cable Tee Adapter

Table 1 (Physical Characteristics of Series)

CATALOG NUMBER	DIMENSIONS IN INCHES			NOMINAL WEIGHT LBS
	A	B	C	
1000	0.75	0.81	1.75	0.06
1001	1.00	1.00	2.12	0.11
1002	1.00	1.00	2.12	0.11
1003	1.25	1.31	2.44	0.19
1004	1.25	1.31	2.44	0.19
1005	1.50	1.62	2.81	0.28
1006	1.50	1.62	2.81	0.28
1007	1.75	1.88	3.12	0.38
1008	1.75	1.88	3.12	0.38
1009	2.00	2.25	3.50	0.62
1010	2.00	2.25	3.50	0.62
1011	2.25	2.50	3.88	0.75
1012	2.25	2.50	3.88	0.75

Table 2 (Catalog Numbers)

STRANDED CONDUCTOR DIAMETER RANGE	CATALOG NUMBER									
	SPS									
INCHES	1	1 1/4	1 1/2	2	2 1/2	3	3 1/2	4	5	6
0.366 - 0.394	1000.40	1000.40	1000.40	1000.40	1000.40	1000.40	1000.40	1000.40	1000.40	1000.40
0.395 - 0.428	1000.44	1000.44	1000.44	1000.44	1000.44	1000.44	1000.44	1000.44	1000.44	1000.44
0.429 - 0.459	1000.47	1000.47	1000.47	1000.47	1000.47	1000.47	1000.47	1000.47	1000.47	1000.47
0.460 - 0.490	1001.50	1002.50	1002.50	1002.50	1002.50	1002.50	1002.50	1002.50	1002.50	1002.50
0.491 - 0.521	1001.53	1002.53	1002.53	1002.53	1002.53	1002.53	1002.53	1002.53	1002.53	1002.53
0.522 - 0.552	1001.56	1002.56	1002.56	1002.56	1002.56	1002.56	1002.56	1002.56	1002.56	1002.56
0.553 - 0.599	1001.61	1002.61	1002.61	1002.61	1002.61	1002.61	1002.61	1002.61	1002.61	1002.61
0.600 - 0.644	1001.66	1002.66	1002.66	1002.66	1002.66	1002.66	1002.66	1002.66	1002.66	1002.66
0.645 - 0.691	1003.70	1003.70	1003.70	1003.70	1004.70	1004.70	1004.70	1004.70	1004.70	1004.70
0.692 - 0.738	1003.75	1003.75	1003.75	1003.75	1004.75	1004.75	1004.75	1004.75	1004.75	1004.75
0.739 - 0.800	1003.81	1003.81	1003.81	1003.81	1004.81	1004.81	1004.81	1004.81	1004.81	1004.81
0.801 - 0.863	1003.88	1003.88	1003.88	1003.88	1004.88	1004.88	1004.88	1004.88	1004.88	1004.88
0.864 - 0.925	-	-	1005.94	1005.94	1005.94	1006.94	1006.94	1006.94	1006.94	1006.94
0.926 - 0.985	-	-	1005.100	1005.100	1005.100	1006.100	1006.100	1006.100	1006.100	1006.100
0.986 - 1.047	-	-	1005.106	1005.106	1005.106	1006.106	1006.106	1006.106	1006.106	1006.106
1.048 - 1.110	-	-	1005.112	1005.112	1005.112	1006.112	1006.112	1006.112	1006.112	1006.112
1.111 - 1.173	-	-	-	1007.119	1007.119	1008.119	1008.119	1008.119	1008.119	1008.119
1.174 - 1.235	-	-	-	1007.125	1007.125	1008.125	1008.125	1008.125	1008.125	1008.125
1.236 - 1.297	-	-	-	1007.131	1007.131	1008.131	1008.131	1008.131	1008.131	1008.131
1.298 - 1.360	-	-	-	1009.138	1009.138	1009.138	1010.138	1010.138	1010.138	1010.138
1.361 - 1.423	-	-	-	1009.144	1009.144	1009.144	1010.144	1010.144	1010.144	1010.144
1.424 - 1.485	-	-	-	1009.150	1009.150	1009.150	1010.150	1010.150	1010.150	1010.150
1.486 - 1.542	-	-	-	1009.156	1009.156	1009.156	1010.156	1010.156	1010.156	1010.156
1.543 - 1.605	-	-	-	1011.162	1011.162	1012.162	1012.162	1012.162	1012.162	1012.162
1.606 - 1.668	-	-	-	1011.169	1011.169	1012.169	1012.160	1012.169	1012.169	1012.169
1.669 - 1.730	-	-	-	1011.175	1011.175	1012.175	1012.175	1012.175	1012.175	1012.175
1.731 - 1.792	-	-	-	1011.181	1011.181	1012.181	1012.181	1012.181	1012.181	1012.181
1.793 - 1.855	-	-	-	1011.188	1011.188	1012.188	1012.188	1012.188	1012.188	1012.188

© 2010, AFL, all rights reserved. PP-3-00148, Revision 0, 12.21.10
Specifications are subject to change without notice.

DOSSERT®

A-Frame Connectors
14500 and 14600 Series

Branch Connector (14500 Series) -
Vee Connector (14600 Series) - 30°

AFL can supply prefabricated A-frame assemblies ready for field mounting and welding. Assemblies are factory fabricated from standard A-frame fittings and pipe carefully welded and inspected to insure accuracy and best performance.

A-frame fittings are designed to make fast, reliable A-frame assemblies. Fittings are designed to be welded on the outside of the pipe allowing use of both Schedule 40 and Schedule 80 pipe. Socket design allows for slight inaccuracies in field cut length of pipe.

To order include angle, top and bottom run sizes, leg size, centerline height and crossbrace size and spacing if required.



A-Frame

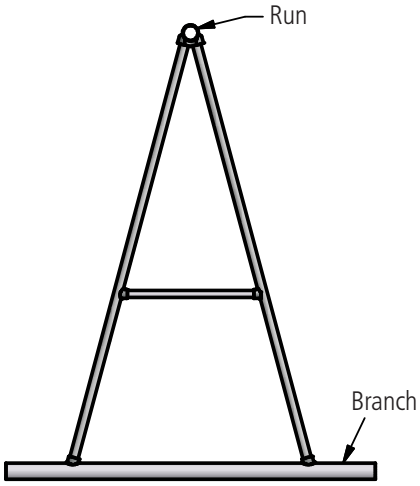

Ordering Instructions

Step 1: Determine Catalog Number

Determine the catalog number based on the bus conductor being used for the run and the branch.

Example: A 15° branch connector for a run conductor of 3" schedule 40 and a branch conductor of 2 1/2" schedule 40, the catalog number is: 14508-7

A 30° vee connector for a run conductor of 4" schedule 40 and a branch conductor of 2 1/2" schedule 40, the catalog number is: 14610-7

Notes

1. For bus conductor information, see AFL Bus Conductor section.

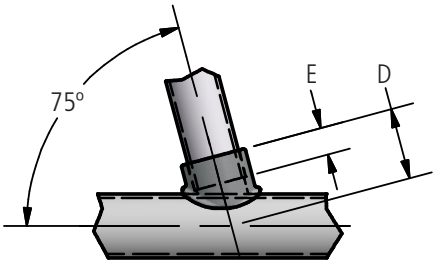

WTA-75-AA
WTA-80-AA

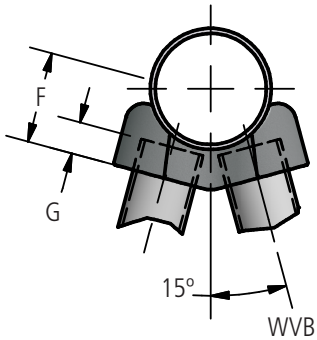

WVBP-20-AA
WVBP-30-AA

© 2010, AFL, all rights reserved. PP-3-00212, Revision 1, 9.16.13
Specifications are subject to change without notice.

DOSSERT®

A-Frame Connectors
14500 and 14600 Series

Branch Connector (14500 Series) -
Vee Connector (14600 Series) - 30°

Ordering Information

CONDUCTOR SIZE		CATALOG NUMBER		DIMENSIONS IN INCHES				NOMINAL WEIGHT LBS	
SCH 40 & SCH80		BRANCH CONNECTOR	VEE CONNECTOR	D	E	F	G	BRANCH CONNECTOR	VEE CONNECTOR
RUN	BRANCH								
1 1/2	1	14504-3	14605-3	2.94	1.75	3.19	1.75	0.4	1
1 1/2	1 1/4	14500-4	14605-4	3.25	2.00	3.06	2	0.4	1.2
1 1/2	1 1/2	14500-5	14605-5	3.25	2.00	4.56	2	0.6	2.1
2	1	14504-3	14606-3	3.25	1.75	3.25	1.75	0.4	1.2
2	1 1/4	14506-4	14606-4	3.50	2.00	4.31	2	0.6	1.2
2	1 1/2	14500-5	14606-5	3.50	2.00	3.25	2	0.6	2.8
2	2	14506-6	14606-6	3.56	2.00	3.25	2	1.6	2.6
2 1/2	1	14507-3	14607-3	3.44	1.75	3.81	1.75	0.4	0.9
2 1/2	1 1/4	14506-4	14607-4	3.69	2.00	4.56	2	0.6	1.2
2 1/2	1 1/2	14507-5	14607-5	3.75	2.00	4.25	2	1.3	1.5
2 1/2	2	14507-6	14607-6	3.88	2.00	3.44	2	1.4	2.6
2 1/2	2 1/2	14500-7	14607-7	3.88	2.00	3.5	2.5	1	3.3
3	1	14507-3	14608-3	3.75	1.75	4.19	1.75	0.4	1.1
3	1 1/4	14506-4	14608-4	4.12	2.00	4.19	1	0.6	1.3
3	1 1/2	14507-5	14608-5	4.12	2.00	4.88	2	1.3	1.6
3	2	14508-6	14608-6	4.19	2.00	3.88	2.12	1.3	2.7
3	2 1/2	14508-7	14608-7	4.69	2.50	4.31	2.5	1.7	3.1
3	3	14508-8	14608-8	4.81	2.50	4.25	2.5	2.3	5
3 1/2	1 1/4	14509-4	14609-4	4.31	2.00	5	2	0.6	1.3
3 1/2	1 1/2	14507-5	14609-5	4.44	2.00	5.06	2	1.3	1.6
3 1/2	2	14509-6	14609-6	4.44	2.00	4.56	2	1.3	2.6
3 1/2	2 1/2	14508-7	14609-7	5.00	2.50	3.94	2	1.7	3.5
3 1/2	3	14508-8	14609-8	5.19	2.50	4.88	1.75	2.3	5.3
3 1/2	3 1/2	14509-9	14609-9	5.62	3.00	4.88	3	4.6	5.8
4	1 1/2	14510-5	14610-5	4.62	2.00	6.12	2	1.4	1.6
4	2	14509-6	14610-6	4.69	2.00	4.44	2	1.3	2.8
4	2 1/2	14510-7	14610-7	5.31	2.50	4.44	2	1.6	2.9
4	3	14510-8	14610-8	5.31	2.50	5.69	2.5	2.8	5.3
4	3 1/2	14500-9	14610-9	5.94	3.00	5.25	3	2.4	5.5
4	4	14500-10	14610-10	6.44	3.50	7.38	2.25	3.4	6.5
5	2 1/2	14510-7	14612-7	5.94	2.50	6.94	2.5	1.6	2.9
5	3	14511-8	14612-8	5.88	2.50	6.62	2.5	2.2	5.6
5	3 1/2	14500-9	14612-9	6.56	3.00	6.62	3	2.4	8.8
5	4	14500-10	14612-10	7.06	3.50	8	2.3	3.4	6.5
5	5	14500-12	14612-12	7.69	4.00	7.75	2.75	6	12
6	2 1/2	14500-7	14613-7	6.00	2.00	7.62	2.5	1	2.9
6	3	14511-8	14613-8	6.56	2.50	7.31	2.5	2.2	5.6
6	3 1/2	14500-9	14613-9	7.19	3.00	7.38	3	2.4	5.5
6	4	14500-10	14613-10	7.69	3.50	8.62	2.25	3.4	6.5
6	5	14500-12	14613-12	8.25	4.00	8.38	2.75	6	12
6	6	14500-13	14613-13	8.31	4.00	8.69	3.25	6.5	14.3

© 2010, AFL, all rights reserved. PP-3-00212, Revision 1, 9.16.13
Specifications are subject to change without notice.

DOSSERT®

TYPE WT-AA, WTA-75-AA, WTA-80-AA

Welded Tee



WT-AA

Material

Aluminum Alloy

Notes

1. For a welded tee at 75° for 1" to 1" pipe order: WTA100-100-75-AA.

2. For a welded tee at 80° for 1" to 1" pipe order: WTA100-100-80-AA.



WTA-AA

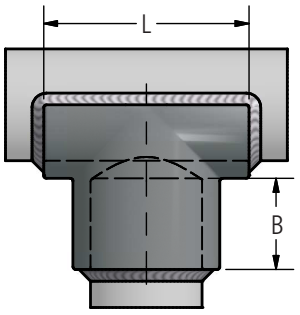

WT-AA

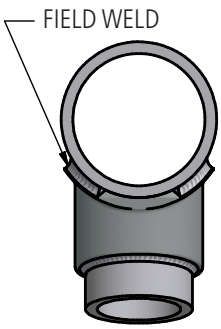

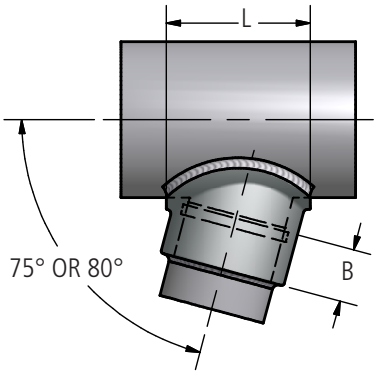

WTA-AA

Ordering Information

CATALOG NUMBER			SPS		DIMENSIONS IN INCHES	
75 DEGREE	80 DEGREE	90 DEGREE	RUN	TAP	B	L
WTA75-75-75-AA	WTA75-75-80-AA	WT75-75-AA	3/4	3/4	3/4	2 1/8
WTA100-75-75-AA	WTA100-75-80-AA	WT100-75-AA	1	3/4	3/4	2 1/8
WTA100-100-75-AA	WTA100-100-80-AA	WT100-100-AA	1	1	3/4	2 1/4
WTA125-75-75-AA	WTA125-75-80-AA	WT125-75-AA	1 1/4	3/4	3/4	2 1/8
WTA125-100-75-AA	WTA125-100-80-AA	WT125-100-AA	1 1/4	1	3/4	2 1/4
WTA125-125-75-AA	WTA125-125-80-AA	WT125-125-AA	1 1/4	1 1/4	1	2 1/2
WTA125-250-75-AA	WTA125-250-80-AA	WT125-250-AA	1 1/4	2 1/2	1 1/2	3 1/2
WTA150-75-75-AA	WTA150-75-80-AA	WT150-75-AA	1 1/2	3/4	3/4	2 1/8
WTA150-100-75-AA	WTA150-100-80-AA	WT150-100-AA	1 1/2	1	3/4	2 1/4
WTA150-125-75-AA	WTA150-125-80-AA	WT150-125-AA	1 1/2	1 1/4	1	2 1/2
WTA150-150-75-AA	WTA150-150-80-AA	WT150-150-AA	1 1/2	1 1/2	1	2 3/4
WTA150-200-75-AA	WTA150-200-80-AA	WT150-200-AA	1 1/2	1 1/2	1 1/4	3 11/16
WTA200-75-75AA	WTA200-75-80-AA	WT200-75-AA	2	3/4	3/4	2 1/8
WTA200-100-75-AA	WTA200-100-80-AA	WT200-100-AA	2	1	3/4	2 1/4
WTA200-125-75-AA	WTA200-125-80-AA	WT200-125-AA	2	1 1/4	1	2 1/2
WTA200-150-75-AA	WTA200-150-80-AA	WT200-150-AA	2	1 1/2	1	2 3/4
WTA200-200-75-AA	WTA200-200-80-AA	WT200-200-AA	2	2	1 1/4	3 1/4
WTA200-300-75-AA	WTA200-300-80-AA	WT200-300-AA	2	3	1 3/4	4 3/8
WTA200-400-75-AA	WTA200-400-80-AA	WT200-400-AA	2	4	2 1/4	4 7/8
WTA250-75-75-AA	WTA250-75-80-AA	WT250-75-AA	2 1/2	3/4	3/4	2 1/8
WTA250-100-75-AA	WTA250-100-80-AA	WT250-100-AA	2 1/2	1	3/4	2 1/4
WTA250-125-75-AA	WTA250-125-80-AA	WT250-125-AA	2 1/2	1 1/4	1	2 1/2

© 2011, AFL, all rights reserved. PP-3-00548, Revision 2, 9.16.13
Specifications are subject to change without notice.

DOSSERT®

TYPE WT-AA, WTA-75-AA, WTA-80-AA

Welded Tee

Ordering Information

CATALOG NUMBER			SPS		DIMENSIONS IN INCHES	
75 DEGREE	80 DEGREE	90 DEGREE	RUN	TAP	B	L
WTA250-150-75-AA	WTA250-150-80-AA	WT250-150-AA	2 1/2	1 1/2	1	2 3/4
WTA250-200-75-AA	WTA250-200-80-AA	WT250-200-AA	2 1/2	2	1 1/4	3 1/4
WTA250-250-75-AA	WTA250-250-80-AA	WT250-250-AA	2 1/2	2 1/2	1 1/2	3 3/4
WTA300-75-75-AA	WTA300-75-80-AA	WT300-75-AA	3	3/4	3/4	2 1/8
WTA300-100-75-AA	WTA300-100-80-AA	WT300-100-AA	3	1	3/4	2 1/4
WTA300-125-75-AA	WTA300-125-80-AA	WT300-125-AA	3	1 1/4	1	2 1/2
WTA300-150-75-AA	WTA300-150-80-AA	WT300-150-AA	3	1 1/2	1	2 3/4
WTA300-200-75-AA	WTA300-200-80-AA	WT300-200-AA	3	2	1 1/4	3 1/4
WTA300-250-75-AA	WTA300-250-80-AA	WT300-250 -AA	3	2 1/2	1 1/2	3 3/4
WTA300-300-75-AA	WTA300-300-80-AA	WT300-300 -AA	3	3	1 3/4	4 3/8
WTA300-350-75-AA	WTA300-350-80-AA	WT300-350-AA	3	3 1/2	2	4 7/8
WTA300-400-75-AA	WTA300-400-80-AA	WT300-400-AA	3	4	2 1/4	5 3/8
WTA300-500-75-AA	WTA300-500-80-AA	WT300-500-AA	3	5	2 3/4	6 7/16
WTA350-75-75-AA	WTA350-75-80-AA	WT350-75-AA	3 1/2	3/4	3/4	2 1/8
WTA350-100-75-AA	WTA350-100-80-AA	WT350-100-AA	3 1/2	1	3/4	2 1/4
WTA350-125-75-AA	WTA350-125-80-AA	WT350-125-AA	3 1/2	1 1/4	1	2 1/2
WTA350-150-75-AA	WTA350-150-80-AA	WT350-150-AA	3 1/2	1 1/2	1	2 3/4
WTA350-200-75-AA	WTA350-200-80-AA	WT350-200-AA	3 1/2	2	1 1/4	3 1/4
WTA350-250-75-AA	WTA350-250-80-AA	WT350-250-AA	3 1/2	2 1/2	1 1/2	3 3/4
WTA350-300-75-AA	WTA350-300-80-AA	WT350-300-AA	3 1/2	3	1 3/4	4 3/8
WTA350-350-75-AA	WTA350-350-80-AA	WT350-350-AA	3 1/2	3 1/2	2	4 7/8
WTA400-75-75-AA	WTA400-75-80-AA	WT400-75-AA	4	3/4	3/4	2 1/8
WTA400-100-75-AA	WTA400-100-80-AA	WT400-100-AA	4	1	3/4	2 1/4
WTA400-125-75-AA	WTA400-125-80-AA	WT400-125-AA	4	1 1/4	1	2 1/2
WTA400-150-75-AA	WTA400-150-80-AA	WT400-150-AA	4	1 1/2	1	2 3/4
WTA400-200-75-AA	WTA400-200-80-AA	WT400-200-AA	4	2	1 1/4	3 1/4
WTA400-250-75-AA	WTA400-250-80-AA	WT400-250-AA	4	2 1/2	1 1/2	3 3/4
WTA400-300-75-AA	WTA400-300-80-AA	WT400-300-AA	4	3	1 3/4	4 3/8
WTA400-350-75-AA	WTA400-350-80-AA	WT400-350-AA	4	3 1/2	2	4 7/8
WTA400-400-75-AA	WTA400-400-80-AA	WT400-400-AA	4	4	2 1/4	5 3/8
WTA500-100-75-AA	WTA500-100-80-AA	WT500-100-AA	5	1	3/4	2 1/4
WTA500-125-75-AA	WTA500-125-80-AA	WT500-125-AA	5	1 1/4	1	2 1/2
WTA500-150-75-AA	WTA500-150-80-AA	WT500-150-AA	5	1 1/2	1	2 3/4
WTA500-200-75-AA	WTA500-200-80-AA	WT500-200-AA	5	2	1 1/4	3 1/4
WTA500-250-75-AA	WTA500-250-80-AA	WT500-250-AA	5	2 1/2	1 1/2	3 3/4
WTA500-300-75-AA	WTA500-300-80-AA	WT500-300-AA	5	3	1 3/4	4 3/8
WTA500-350-75-AA	WTA500-350-80-AA	WT500-350-AA	5	3 1/2	2	4 7/8
WTA500-400-75-AA	WTA500-400-80-AA	WT500-400-AA	5	4	2 1/4	5 3/8
WTA500-500-75-AA	WTA500-500-80-AA	WT500-500-AA	5	5	2 3/4	6 7/16
WTA600-100-75-AA	WTA600-100-80-AA	WT600-100-AA	6	1	3/4	2 1/4
WTA600-125-75-AA	WTA600-125-80-AA	WT600-125-AA	6	1 1/4	1	2 1/2
WTA600-150-75-AA	WTA600-150-80-AA	WT600-150-AA	6	1 1/2	1	2 3/4
WTA600-200-75-AA	WTA600-200-80-AA	WT600-200-AA	6	2	1 1/4	3 1/4
WTA600-250-75-AA	WTA600-250-80-AA	WT600-250-AA	6	2 1/2	1 1/2	3 3/4
WTA600-300-75-AA	WTA600-300-80-AA	WT600-300-AA	6	3	1 3/4	4 3/8
WTA600-350-75-AA	WTA600-350-80-AA	WT600-350-AA	6	3 1/2	2	4 7/8
WTA600-400-75-AA	WTA600-400-80-AA	WT600-400-AA	6	4	2 1/4	5 3/8
WTA600-500-75-AA	WTA600-500-80-AA	WT600-500-AA	6	5	2 3/4	6 7/16
WTA600-600-75-AA	WTA600-600-80-AA	WT600-600-AA	6	6	3 1/4	8 1/4
WTA800R-400-75-AA	WTA800R-400-80-AA	WT800R-400-AA	8" O.D.	4	2 3/4	5 3/8
WTA800R-500-75-AA	WTA800R-500-80-AA	WT800R-500-AA	8" O.D.	5	2 3/4	6 7/16
WTA800R-800R-75-AA	WTA800R-800R-80-AA	WT800R-800R-AA	8" O.D.	8" O.D.	2 3/4	10
WTA800-500-75-AA	WTA800-500-80-AA	WT800-500-AA	8"	5	2 3/4	7 5/16

© 2011, AFL, all rights reserved. PP-3-00548, Revision 2, 9.16.13
Specifications are subject to change without notice.

DOSSERT®

TYPE WVBP-20-AA, WVBP-30-AA

Welded Vee Connector for Aluminum Tubing

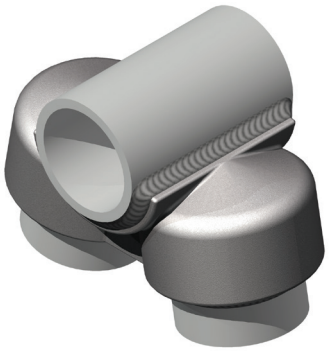

Material

Aluminum Alloy

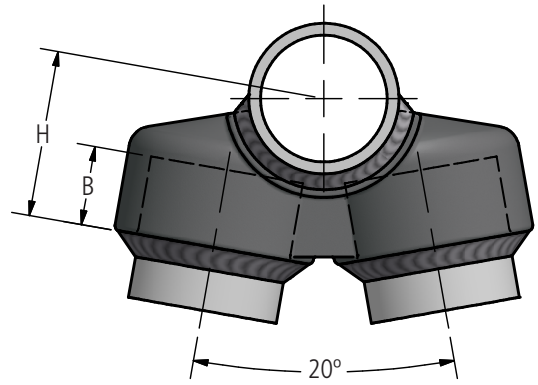

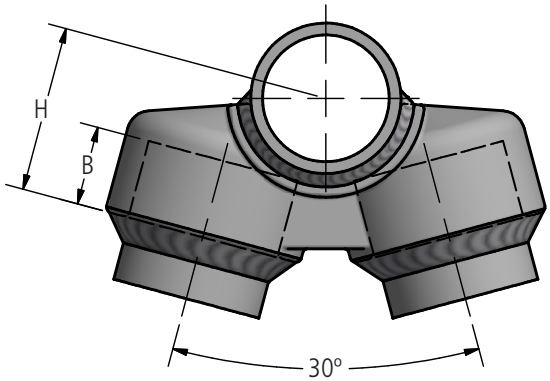

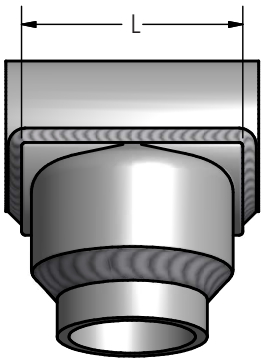

Ordering Information

CATALOG NUMBER		SPS		DIMENSIONS IN INCHES		
20 DEGREE	30 DEGREE	RUN	TAP	B	H	L
WVBP100-50-20-AA	WVBP100-50-30-AA	1	1/2	1/2	1-1/8	1-7/8
WVBP100-75-20-AA	WVBP100-75-30-AA	1	3/4	3/4	1-5/8	2-1/8
WVBP125-75-20-AA	WVBP125-75-30-AA	1-1/4	3/4	3/4	1-3/4	2-1/8
WVBP125-100-20-AA	WVBP125-100-30-AA	1-1/4	1	3/4	1-3/4	2-1/4
WVBP125-125-20-AA	WVBP125-125-30-AA	1-1/4	1-1/4	1	2	2-5/8
WVBP150-75-20-AA	WVBP150-75-30-AA	1-1/2	3/4	3/4	1-7/8	2-1/8
WVBP150-100-20-AA	WVBP150-100-30-AA	1-1/2	1	3/4	1-7/8	2-1/4
WVBP150-125-20-AA	WVBP150-125-30-AA	1-1/2	1-1/4	1	2-1/8	2-5/8
WVBP150-150-20-AA	WVBP150-150-30-AA	1-1/2	1-1/2	1	2-3/8	2-7/8
WVBP200-100-20-AA	WVBP200-100-30-AA	2	1	3/4	2-1/8	2-1/4
WVBP200-125-20-AA	WVBP200-125-30-AA	2	1-1/4	1	2-3/8	2-5/8
WVBP200-150-20-AA	WVBP200-150-30-AA	2	1-1/2	1	2-3/8	2-7/8
WVBP200-200-20-AA	WVBP200-200-30-AA	2	2	1-1/4	2-5/8	3-1/2
WVBP250-100-20-AA	WVBP250-100-30-AA	2-1/2	1	3/4	2-3/8	2-1/4
WVBP250-125-20-AA	WVBP250-125-30-AA	2-1/2	1-1/4	1	2-5/8	2-5/8
WVBP250-150-20-AA	WVBP250-150-30-AA	2-1/2	1-1/2	1	2-5/8	2-7/8

© 2010, AFL, all rights reserved. PP-3-00573, Revision 0, 12.20.10
Specifications are subject to change without notice.

DOSSERT®

TYPE WVBP-20-AA, WVBP-30-AA

Ordering Information

CATALOG NUMBER		SPS		DIMENSIONS IN INCHES		
20 DEGREE	30 DEGREE	RUN	TAP	B	H	L
WVBP250-200-20-AA	WVBP250-200-30-AA	2-1/2	2	1-1/4	2-7/8	3-1/2
WVBP250-250-20-AA	WVBP250-250-30-AA	2-1/2	2-1/2	1-1/2	3-1/8	4
WVBP300-125-20-AA	WVBP300-125-30-AA	3	1-1/4	1	2-15/16	2-5/8
WVBP300-150-20-AA	WVBP300-150-30-AA	3	1-1/2	1	2-15/16	2-7/8
WVBP300-200-20-AA	WVBP300-200-30-AA	3	2	1-1/4	3-3/16	3-1/2
WVBP300-250-20-AA	WVBP300-250-30-AA	3	2-1/2	1-1/2	3-7/16	4
WVBP300-300-20-AA	WVBP300-300-30-AA	3	3	1-3/4	3-11/16	4-5/8
WVBP350-100-20-AA	WVBP350-100-30-AA	3-1/2	1	3/4	2-5/8	2-1/4
WVBP350-150-20-AA	WVBP350-150-30-AA	3-1/2	1-1/2	1	3-1/4	2-7/8
WVBP350-200-20-AA	WVBP350-200-30-AA	3-1/2	2	1-1/4	3-1/2	3-1/2
WVBP350-250-20-AA	WVBP350-250-30-AA	3-1/2	2-1/2	1-1/2	3-3/4	4
WVBP350-300-20-AA	WVBP350-300-30-AA	3-1/2	3	1-3/4	4	4-5/8
WVBP350-350-20-AA	WVBP350-350-30-AA	3-1/2	3-1/2	2	4-1/4	5-1/8
WVBP400-150-20-AA	WVBP400-150-30-AA	4	1-1/2	1	3-1/2	2-7/8
WVBP400-200-20-AA	WVBP400-200-30-AA	4	2	1-1/4	3-3/4	3-1/2
WVBP400-250-20-AA	WVBP400-250-30-AA	4	2-1/2	1-1/2	4	4
WVBP400-300-20-AA	WVBP400-300-30-AA	4	3	1-3/4	4-1/4	4-5/8
WVBP400-350-20-AA	WVBP400-350-30-AA	4	3-1/2	2	4-1/2	5-1/8
WVBP400-400-20-AA	WVBP400-400-30-AA	4	4	2-1/4	4-3/4	5-7/8
WVBP500-150-20-AA	WVBP500-150-30-AA	5	1-1/2	1	4	2-7/8
WVBP500-200-20-AA	WVBP500-200-30-AA	5	2	1-1/4	4-1/4	3-1/2
WVBP500-250-20-AA	WVBP500-250-30-AA	5	2-1/2	1-1/2	4-1/2	4
WVBP500-300-20-AA	WVBP500-300-30-AA	5	3	1-3/4	4-3/4	4-5/8
WVBP500-350-20-AA	WVBP500-350-30-AA	5	3-1/2	2	5	5-1/8
WVBP500-400-20-AA	WVBP500-400-30-AA	5	4	2-1/4	5-1/4	5-7/8
WVBP500-500-20-AA	WVBP500-500-30-AA	5	5	2-3/4	5-3/4	6-15/16
WVBP600-200-20-AA	WVBP600-200-30-AA	6	2	1-1/4	4-13/16	3-1/2
WVBP600-250-20-AA	WVBP600-250-30-AA	6	2-1/2	1-1/2	5-1/16	4
WVBP600-300-20-AA	WVBP600-300-30-AA	6	3	1-3/4	5-5/16	4-5/8
WVBP600-350-20-AA	WVBP600-350-30-AA	6	3-1/2	2	5-9/16	5-1/8
WVBP600-400-20-AA	WVBP600-400-30-AA	6	4	2-1/4	5-13/16	5-7/8
WVBP600-500-20-AA	WVBP600-500-30-AA	6	5	2-3/4	6-5/16	6-15/16
WVBP600-600-20-AA	WVBP600-600-30-AA	6	6	3-1/4	6-13/16	8

© 2010, AFL, all rights reserved. PP-3-00573, Revision 0, 12.20.10
Specifications are subject to change without notice.

DOSSERT®

TYPE 15950, 15960

Flexible Rope Lay Assemblies



Aluminum flexible rope lay assemblies are designed to connect to aluminum or copper pads. Pads conform to NEMA standards. Lengths other than those shown can be supplied if required. Current ratings are based on 30°C rise over 40°C ambient.

Material

Aluminum Alloy

Ordering Instructions

1. Determine the catalog number by terminal arrangement and current rating required. Ex: For 90° terminals at 1660 amperes, the catalog number is: 15960.
2. For pad sizes and location of holes, note letter in catalog number and refer to page 3.

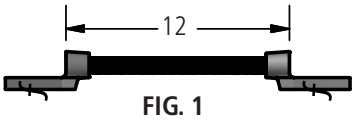

FIG. 1
STRAIGHT

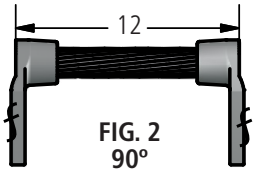

FIG. 2
90°

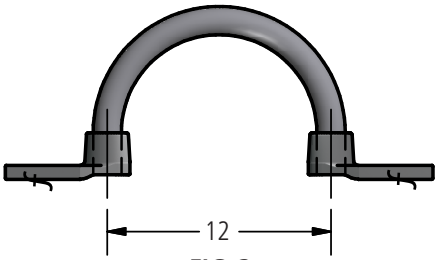

FIG. 3
LOOP

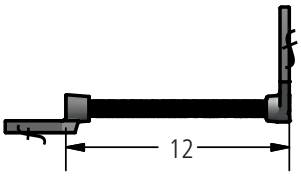

FIG. 4
STRAIGHT & 90°

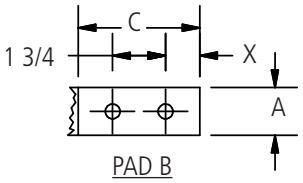

PAD B

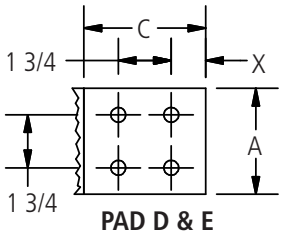

PAD D & E

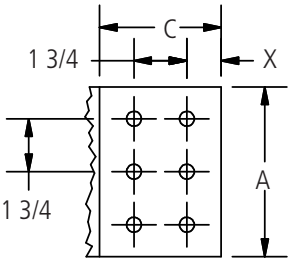

PAD G

Ordering Information

CATALOG NUMBER	FIG. NO.	CURRENT RATING AMPERES	ROPE LAY CONDUCTOR SIZE	ROPE LAY CONDUCTOR NO.	PAD SIZE	PAD THICKNESS INCHES	NOMINAL WEIGHT LBS
15950	1	600	636 KCMIL	1	B	0.69	1.40
15951	2	600	636 KCMIL	1	B	0.69	1.40
15952	3	600	636 KCMIL	1	B	0.69	1.70
15953	1	996	636 KCMIL	2	D	0.69	5.20
15954	2	996	636 KCMIL	2	D	0.69	5.20
15955	3	996	636 KCMIL	2	D	0.69	5.80
15956	1	1000	1272 KCMIL	1	D	0.69	3.10
15957	2	1000	1272 KCMIL	1	D	0.69	3.10
15958	3	1000	1272 KCMIL	1	D	0.69	3.70
15959	1	1660	1272 KCMIL	2	E	1.00	8.90
15960	2	1660	1272 KCMIL	2	E	1.00	8.90
15961	3	1660	1272 KCMIL	2	E	1.00	10.10
15962	1	2160	1272 KCMIL	3	G*	0.75	12.90
15963	2	2160	1272 KCMIL	3	G*	0.75	12.90
15964	3	2160	1272 KCMIL	3	G*	0.75	14.70
15965	4	600	636 KCMIL	1	B	0.69	1.40
15966	4	996	636 KCMIL	2	D	0.69	5.20
15967	4	1000	1272 KCMIL	1	D	0.69	3.10
15968	4	1660	1272 KCMIL	2	E	1.00	8.90
15969	4	2160	1272 KCMIL	3	G*	0.75	12.90

* Pad width is 6.75".

PAD DIMENSIONS			
PAD SIZE	DIMENSIONS IN INCHES		
	A	C	X
B	1 3/4	3 1/2	5/8
D	3	3 1/2	5/8
E	4	4 1/2	1 1/8
G	6	4 1/2	1 1/4

© 2011, AFL, all rights reserved. PP-3-00157, Revision 2, 11.5.2020
Specifications are subject to change without notice.

230 kV Aluminum Welded Terminal Connectors

DOSSERT®

TYPE 34300

Tube To Flat

Double terminal is designed to connect to aluminum or copper pads.

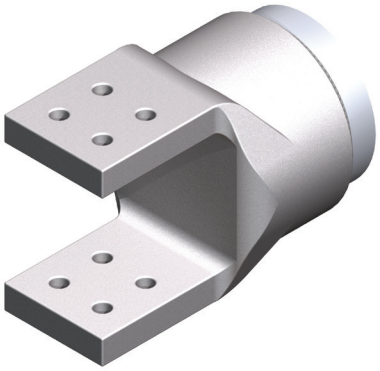

Material

Aluminum Alloy

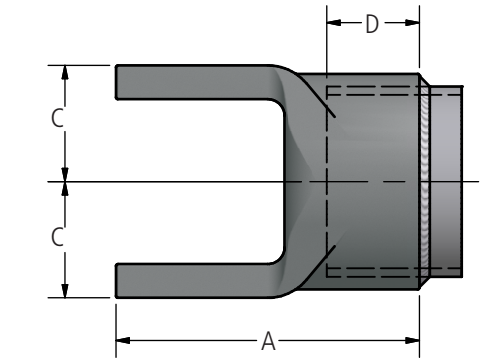

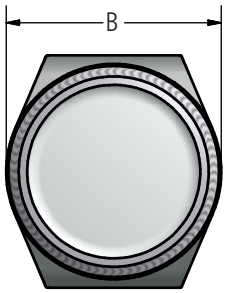

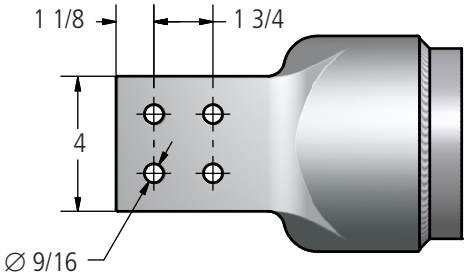

Ordering Information

CATALOG NUMBER	SPS	DIMENSIONS IN INCHES				NOMINAL WEIGHT LBS
		A	B	C	D	
34308E	3	7.62	4.12	2.62	1.75	5.20
34309E	3 1/2	8.19	4.69	2.94	2.00	5.90
34310E	4	8.44	5.19	3.25	2.25	6.20
34312E	5	9.00	6.38	3.44	2.75	8.30
34313E	6	9.50	7.56	4.25	3.25	9.50

© 2011, AFL, all rights reserved. PP-3-00179, Revision 0, 1.3.11
Specifications are subject to change without notice.

DOSSERT®

TYPE WP2C-N-AA, WP2CA-N-30-AA, WP2CA-N-45-AA, WP2CA-N-90-AA

Welded Terminal to Two Cables

Material

Aluminum Alloy

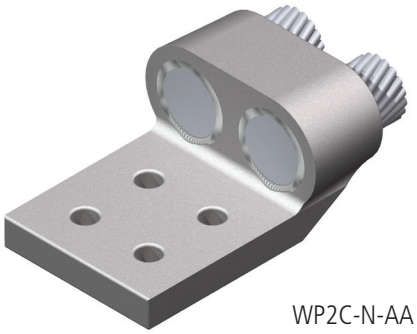

WP2C-N-AA



WP2CA-N-45-AA

Notes

1. Add "U" for undrilled. Ex: WP2C35-2NU-AA
2. Add "F" for finished on both sides
3. For a 30° add suffix'-30', for a 45° add suffix'-45', and for a 90° add suffix '-90'. You must also add an 'A' after WP2C.
4. For a 350 MCM cable, with a 4 hole pad finished on both sides, with a 45° angle use WP2CA35-4NF-45-AA.

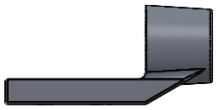

WP2C-N-AA

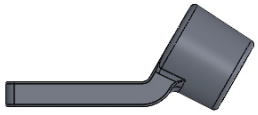

WP2CA-N-30-AA

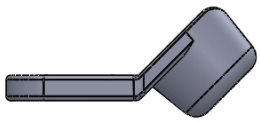

WP2CA-N-45-AA

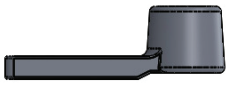

WP2CA-N-90-AA

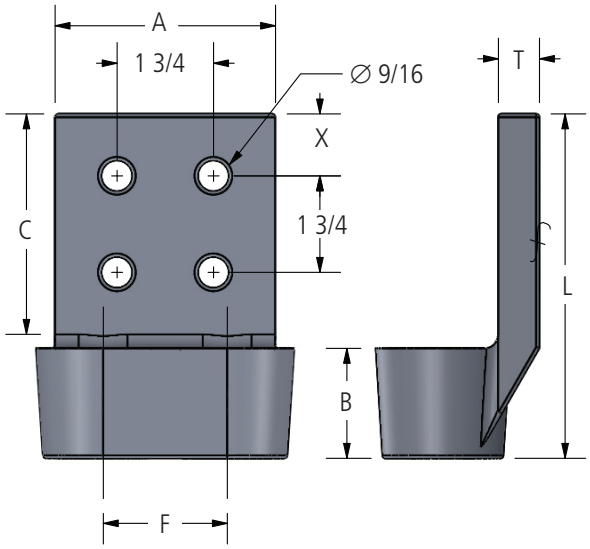

FIG. 2

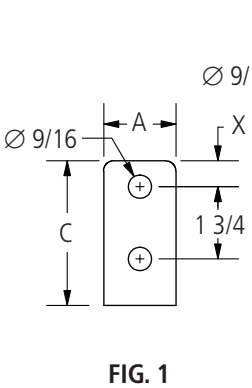

FIG. 1

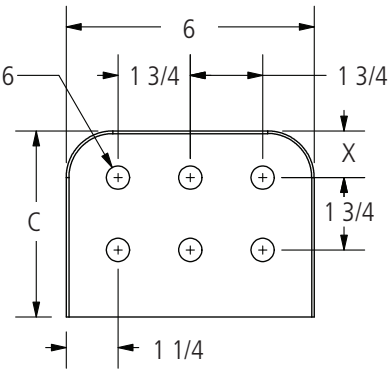

FIG. 3

continued

© 2011, AFL, all rights reserved. PP-3-00528, Revision 7, 8.15.2023
Specifications are subject to change without notice.

DOSSERT®

TYPE WP2C-N-AA, WP2CA-N-30-AA, WP2CA-N-45-AA, WP2CA-N-90-AA

Ordering Information

CATALOG NUMBER	FIG. NO.	CABLE RANGE		DIMENSIONS IN INCHES						
		ALUMINUM	ACSR	A	B	C	F	L	T	X
WP2C35-2N-AA	1	336.4 (19), 350 (19,37,61)	300 (26/7)	1 5/8	1 1/4	3	1 1/4	4 1/2	3/8	5/8
WP2C35-4N-AA	2	336.4 (19), 350 (19,37,61)	300 (26/7)	3	1 1/4	3	1 1/4	4 1/2	3/8	5/8
WP2C35-4N4-AA	2	336.4 (19), 350 (19,37,61)	300 (26/7)	4	1 1/4	4	1 1/4	5 1/2	3/8	1 1/8
WP2C40-2N-AA	1	397.5 (19), 350 (19,37,61)	336.4 (18/1,26/7,30/7)	1 5/8	1 1/4	3	1 1/4	4 1/2	3/8	5/8
WP2C40-4N-AA	2	397.5 (19), 400 (19,37)	336.4 (18/1,26/7,30/7)	3	1 1/4	3	1 3/8	4 1/2	3/8	5/8
WP2C48-2N-AA	1	450 (19,37,61), 477 (19,37)	397.5 18/1,24/7,26/7,30/18)	1 5/8	1 1/4	3	1 3/8	4 1/2	3/8	5/8
WP2C48-4N-AA	2	450 (19,37,61), 477 (19,37)	397.5 18/1,24/7,26/7,30/18)	3	1 1/4	3	1 3/8	4 1/2	3/8	5/8
WP2C55-2N-AA	1	500 (19,37,61), 550 (61,91), 556.5 (19,37)	477 (18/1,24/7,26/7,30/7)	1 5/8	1 1/4	3	1 3/8	4 1/2	3/8	5/8
WP2C55-4N-AA	2	500 (19,37,61), 550 (61,91), 556.5 (19,37)	477 (18/1,24/7,26/7,30/7)	3	1 1/4	3	1 3/8	4 1/2	3/8	5/8
WP2C55-4N4-AA	2	500 (19,37,61), 550 (61,91), 556.5 (19,37)	477 (18/1,24/7,26/7,30/7)	4	1 1/4	4	1 3/8	5 1/2	3/8	1 1/8
WP2C65-2N-AA	1	600 (37,61,91), 636 (37), 650 (37,61,91)	556.5 (18/1,24/7,26/7)	1 5/8	1 1/2	3	1 5/8	4 3/4	1/2	5/8
WP2C65-4N-AA	2	600 (37,61,91), 636 (37), 650 (37,61,91)	556.5 (18/1,24/7,26/7)	3	1 1/2	3	1 5/8	4 3/4	1/2	5/8
WP2C65-4N4-AA	2	600 (37,61,91), 636 (37), 650 (37,61,91)	556.5 (18/1,24/7,26/7)	4	1 1/2	4	1 5/8	5 3/4	1/2	1 1/8
WP2C71-2N-AA	1	650 (37,61,91), 700 (37,61,91), 715.5 (37,61)	636 (24/7,26/7), 605 (24/7,26/7,30/19)	1 5/8	1 1/2	3	1 5/8	4 3/4	1/2	5/8
WP2C71-4N-AA	2	650 (37,61,91), 700 (37,61,91), 715.5 (37,61)	636 (24/7,26/7), 605 (24/7,26/7,30/19)	3	1 1/2	3	1 5/8	4 3/4	1/2	5/8
WP2C71-4N4-AA	2	650 (37,61,91), 700 (37,61,91), 715.5 (37,61)	636 (24/7,26/7), 605 (24/7,26/7,30/19)	4	1 1/2	4	1 5/8	5 3/4	1/2	1 1/8
WP2C80-2N-AA	1	750 (37,61,91), 795 (37,61), 800 (61,91)	636 (30/19), 666.6 (24/7,26/7), 715.5 (27/4)	1 3/4	1 1/2	3	1 5/8	4 3/4	1/2	5/8
WP2C80-4N-AA	2	750 (37,61,91), 795 (37,61), 800 (61,91)	636 (30/19), 666.6 (24/7,26/7), 715.5 (27/4)	3	1 1/2	3	1 5/8	4 3/4	1/2	5/8
WP2C80-4N4-AA	2	750 (37,61,91), 795 (37,61), 800 (61,91)	636 (30/19), 666.6 (24/7,26/7), 715.5 (27/4)	4	1 1/2	4	1 5/8	5 3/4	1/2	1 1/8
WP2C90-2N-AA	1	800 (61,91), 874.5 (37,61), 900 (37,61,91)	715.5 (30/19), 795 (36/1,45/7,24/7,54/7)	2	1 1/2	3	1 5/8	4 3/4	1/2	5/8
WP2C90-4N-AA	2	800 (61,91), 874.5 (37,61), 900 (37,61,91)	715.5 (30/19), 795 (36/1,45/7,24/7,54/7)	3	1 1/2	3	1 5/8	4 3/4	1/2	5/8
WP2C90-4N4-AA	2	800 (61,91), 874.5 (37,61), 900 (37,61,91)	715.5 (30/19), 795 (36/1,45/7,24/7,54/7)	4	1 1/2	4	1 5/8	5 3/4	1/2	1 1/8
WP2C95-2N-AA	1	900 (37,61), 954 (37,61)	795 (30/19), 874.5 (54/7), 900 (45/7,54/7)	2	1 3/4	3	1 5/8	5	1/2	5/8
WP2C95-4N-AA	2	900 (37,61), 954 (37,61)	795 (30/19), 874.5 (54/7), 900 (45/7,54/7)	3	1 3/4	3	1 5/8	5	1/2	5/8
WP2C95-4N4-AA	2	900 (37,61), 954 (37,61)	795 (30/19), 874.5 (54/7), 900 (45/7,54/7)	4	1 3/4	4	1 5/8	6	11/16	1 1/8
WP2C103-2N-AA	1	954 (37/61), 1000 (37,61,91), 1033.5 (37,61)	954,36/1,45/7,54/7)	2	1 3/4	3	1 3/4	5	1/2	5/8
WP2C103-4N-AA	2	954 (37/61), 1000 (37,61,91), 1033.5 (37,61)	954,36/1,45/7,54/7)	3	1 3/4	3	1 3/4	5	1/2	5/8
WP2C103-4N4-AA	2	954 (37/61), 1000 (37,61,91), 1033.5 (37,61)	954,36/1,45/7,54/7)	4	1 3/4	4	1 7/8	6	1/2	1 1/8

continued

© 2011, AFL, all rights reserved. PP-3-00528, Revision 7, 8.15.2023
Specifications are subject to change without notice.

DOSSERT®

TYPE WP2C-N-AA, WP2CA-N-30-AA, WP2CA-N-45-AA, WP2CA-N-90-AA

Ordering Information

CATALOG NUMBER	FIG. NO.	CABLE RANGE		DIMENSIONS IN INCHES						
		ALUMINUM	ACSR	A	B	C	F	L	T	X
WP2C111-2N-AA	1	1100 (91,127), 1113 (61)	1033.5 (36/1,45/7,54/7)	2 1/2	1 3/4	3	1 7/8	5	1/2	5/8
WP2C111-4N-AA	2	1100 (91,127), 1113 (61)	1033.5 (36/1,45/7,54/7)	3	1 3/4	3	1 7/8	5	1/2	5/8
WP2C111-4N4-AA	2	1100 (91,127), 1113 (61)	1033.5 (36/1,45/7,54/7)	4	1 3/4	4	1 5/8	6	11/16	1 1/8
WP2C127R-4N-AA	2	1272MCM ROPELAY	NA	3	2	3	2 1/4	5 1/2	3/4	5/8
WP2C127R-4N4-AA	2	1272MCM ROPELAY	NA	4	2	4	2 1/4	6 1/4	3/4	1 1/8
WP2C135-2N-AA	1	1192.5 (61), 1200 (91,127), 1250 (91,127), 1272 (61), 1300 (91,127), 1351.5 (61)	1113 (45/7,54/19), 1192.5 (45/7,54/19)	2 1/2	2	3	2 1/4	5 1/4	5/8	5/8
WP2C135-4N-AA	2	1192.5 (61), 1200 (91,127), 1250 (91,127), 1272 (61), 1300 (91,127), 1351.5 (61)	1113 (45/7,54/19), 1192.5 (45/7,54/19)	3	2	3	2 1/4	5 1/4	5/8	5/8
WP2C135-4N4-AA	2	1192.5 (61), 1200 (91,127), 1250 (91,127), 1272 (61), 1300 (91,127), 1351.5 (61)	1113 (45/7,54/19), 1192.5 (45/7,54/19)	4	2	4	2 1/4	6 1/4	5/8	1 1/8
WP2C151-2N-AA	2	1400 (91,127), 1431 (61), 1500 (91,127), 1510.5 (61)	1272 (45/7,54/19), 1351.5 (45/7,54/19)	3	2	3	2 1/4	5 1/4	3/4	5/8
WP2C151-4N-AA	2	1400 (91,127), 1431 (61), 1500 (91,127), 1510.5 (61)	1272 (45/7,54/19), 1351.5 (45/7,54/19)	3	2	3	2 1/4	5 3/4	3/4	5/8
WP2C151-4N4-AA	2	1400 (91,127), 1431 (61), 1500 (91,127), 1510.5 (61)	1272 (45/7,54/19), 1351.5 (45/7,54/19)	4	2	4	2 1/4	6 1/4	3/4	1 1/8
WP2C151-6N4-AA	3	1400 (91,127), 1431 (61), 1500 (91,127), 1510.5 (61)	1272 (45/7,54/19), 1351.5 (45/7,54/19)	6	2	4	2 1/4	6 1/4	3/4	1 1/8
WP2C170-2N-AA	2	1590 (61), 1600 (127,169), 1700 (127,169)	1431 (45/7,54/19), 1510.5 (45/7,54/19)	3	2	3	2 1/4	5 1/4	3/4	5/8
WP2C170-4N-AA	2	1590 (61), 1600 (127,169), 1700 (127,169)	1431 (45/7,54/19), 1510.5 (45/7,54/19)	3	2 1/4	3 1/2	2 1/4	6	3/4	5/8
WP2C170-4N4-AA	2	1590 (61), 1600 (127,169), 1700 (127,169)	1431 (45/7,54/19), 1510.5 (45/7,54/19)	4	2 1/4	4	2 1/4	6 1/2	3/4	1 1/8
WP2C170-6N4-AA	3	1590 (61), 1600 (127,169), 1700 (127,169)	1431 (45/7,54/19), 1510.5 (45/7,54/19)	6	2 1/4	4	2 1/4	6 1/2	3/4	1 1/8
WP2C190-4N-AA	2	1750 (127,169), 1800 (127,169), 1900 (127,169)	1590 (45/7,54/19), 1780 (84/19)	3	2 1/4	3	2 1/4	5 1/2	3/4	5/8
WP2C190-4N4-AA	2	1750 (127,169), 1800 (127,169), 1900 (127,169)	1590 (45/7,54/19), 1780 (84/19)	4	2 1/4	4	2 1/4	6 1/2	3/4	1 1/8
WP2C190-6NA-AA	3	1750 (127,169), 1800 (127,169), 1900 (127,169)	1590 (45/7,54/19), 1780 (84/19)	6	2 1/4	4	2 1/4	6 1/2	3/4	1 1/8
WP2C225-4N-AA	2	2000 (91,127,169), 2250 (91)	1780 (84/19), 2167 (72/7)	3	2 1/4	3	2 1/2	5 1/2	3/4	5/8
WP2C225-4N4-AA	2	2000 (91,127,169), 2250 (91)	1780 (84/19), 2167 (72/7)	4	2 1/4	4	2 1/2	6 1/2	3/4	1 1/8
WP2C225-6N4-AA	3	2000 (91,127,169), 2250 (91)	1780 (84/19), 2167 (72/7)	6	2 1/4	4	2 1/2	6 1/2	3/4	1 1/8
WP2C250-4N-AA	2	2500 (91,127,169)	2156 (84/19)	3	2 1/4	3	2 3/4	5 1/2	3/4	5/8
WP2C250-4N4-AA	2	2500 (91,127,169)	2156 (84/19)	4	2 1/4	4	2 3/4	6 1/2	3/4	1 1/8
WP2C250-6N4-AA	3	2500 (91,127,169)	2156 (84/19)	6	2 1/4	4	2 3/4	6 1/2	3/4	1 1/8
WP2C300-4N-AA	2	2750 (91), 3000 (127,169)	2870 ACSR	3	2 1/4	3	2 3/4	5 1/2	7/8	5/8
WP2C300-4N4-AA	2	2750 (91), 3000 (127,169)	2870 ACSR	4	2 1/4	4	2 3/4	6 1/2	7/8	1 1/8

© 2011, AFL, all rights reserved. PP-3-00528, Revision 7, 8.15.2023
Specifications are subject to change without notice.

DOSSERT®

TYPE WPC-N-AA, WPCA-N-30-AA, WPCA-N-45-AA, WPCA-N-90-AA

Offset Welded Terminal to Cable

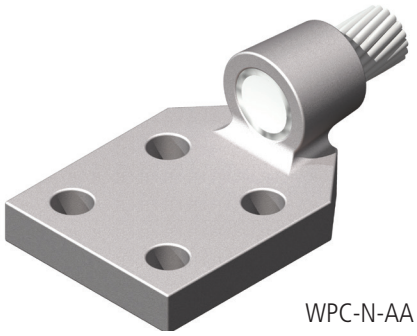

WPC-N-AA

Material

Aluminum Alloy

Notes

- Add "U" for undrilled
- Add "F" for finished on both sides
- For a 3", 4-hole NEMA pad at 45° angle to 450 MCM cable, order: WPCA48-4N-45-AA
- For a 3", 4-hole NEMA pad at 90° angle finished on both sides to 450 MCM cable, order: WPCA48-4NF-90-AA

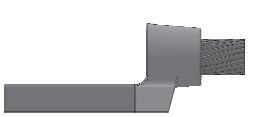

WPC-N-AA

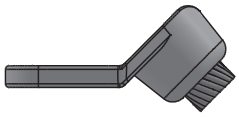

WPCA-N-45-AA

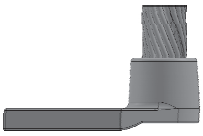

WPCA-N-90-AA



WPCA-N-30-AA

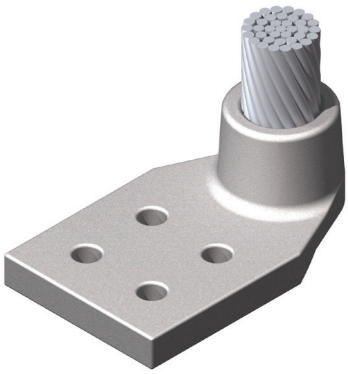

WPCA-N-90-AA

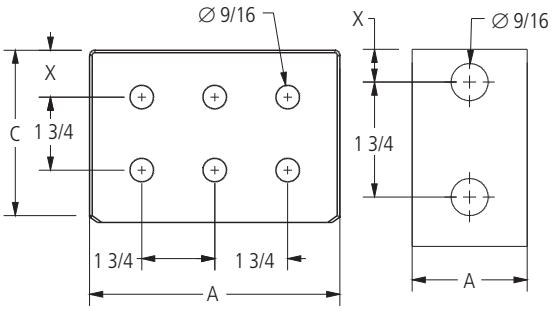

FIG. 3

FIG. 1

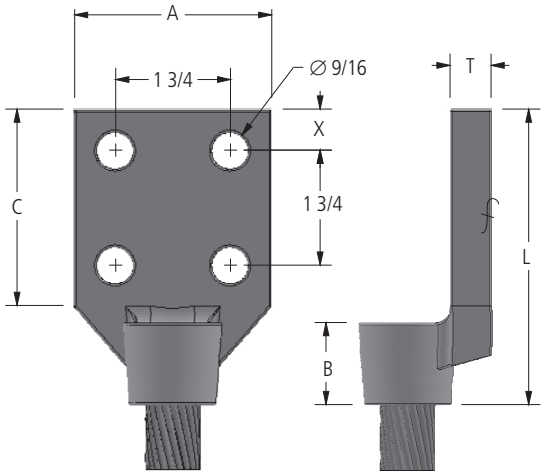

FIG. 2

Ordering Information

CATALOG NUMBER	FIG. NO.	CABLE RANGE		DIMENSIONS IN INCHES					
		ALUMINUM	ACSR	A	B	C	T	L	X
WPC10-2N-AA	1	1/0 (7,19)	1 (6/1), 1/0 (6/1)	1 1/4	3/4	3	5/16	4	5/8
WPC10-4N-AA	2	1/0 (7,19)	1 (6/1), 1/0 (6/1)	3	3/4	3	5/16	4	5/8
WPC13-2N-AA	1	2/0 (7,19,37)	2/0, (6/1)	1 1/4	3/4	3	5/16	4	5/8
WPC17-2N-AA	1	3/0 (7,19,37)	101.8 (12/7), 3/0 (6/1)	1 1/4	3/4	3	5/16	4	5/8
WPC21-2N-AA	1	4/0 (7,19,37), 246.9 (7)	134.6 (12/7), 4/0 (6/1)	1 3/4	1	3	3/8	4 1/4	5/8
WPC21-4N-AA	2	4/0 (7,19,37), 246.9 (7)	134.6 (12/7), 4/0 (6/1)	3	1	3	5/16	4 1/4	5/8

continued

© 2011, AFL, all rights reserved. PP-3-00535, Revision 10, 1.26.2022
Specifications are subject to change without notice.

DOSSERT®

TYPE WPC-N-AA, WPCA-N-30-AA, WPCA-N-45-AA, WPCA-N-90-AA

Ordering Information

CATALOG NUMBER	FIG. NO.	CABLE RANGE		DIMENSIONS IN INCHES					
		ALUMINUM	ACSR	A	B	C	T	L	X
WPC21-4N4-AA	2	4/0 (7,19,37), 246.9 (7)	134.6 (12/7), 4/0 (6/1)	4	1	4	5/16	5 1/4	1 1/8
WPC31-2N-AA	1	250 (7,19,97,61)266.8 (7,19), 300 (19,37,61), 312.8 (19)	159 (12/7), 226.8 (19/1,26/7)	1 3/4	1	3	3/8	4 1/4	5/8
WPC31-4N-AA	2	250 (7,19,97,61)266.8 (7,19), 300 (19,37,61), 312.8 (19)	159 (12/7), 226.8 (19/1,26/7)	3	1	3	3/8	4 1/4	5/8
WPC31-4N4-AA	2	250 (7,19,97,61)266.8 (7,19), 300 (19,37,61), 312.8 (19)	159 (12/7), 226.8 (19/1,26/7)	4	1 1/4	4	3/8	5 1/2	1 1/8
WPC35-2N-AA	1	336.4 (19), 350 (19,37,61)	300 (26/7)	1 3/4	1	3	3/8	4 1/4	5/8
WPC35-4N-AA	2	336.4 (19), 350 (19,37,61)	300 (26/7)	3	1	3	3/8	4 1/4	5/8
WPC35-4N4-AA	2	336.4 (19), 350 (19,37,61)	300 (26/7)	4	1 1/4	4	3/8	5 1/2	1 1/8
WPC40-2N-AA	1	397.5 (19), 400 (37,61)	336.4 (18/1,26/7,30/7)	1 3/4	1 1/4	3	3/8	4 1/2	5/8
WPC40-4N-AA	2	397.5 (19), 400 (37,61)	336.4 (18/1,26/7,30/7)	3	1 1/4	3	3/8	4 1/2	5/8
WPC40-4N4-AA	2	397.5 (19), 400 (37,61)	336.4 (18/1,26/7,30/7)	4	1 1/4	4	3/8	5 1/2	1 1/8
WPC48-2N-AA	1	450 (19,37,61), 477 (19,37)	397.5 (18/1,24/7,26/7,30/7)	1 5/8	1 1/4	3	3/8	4 1/2	5/8
WPC48-4N-AA	2	450 (19,37,61), 477 (19,37)	397.5 (18/1,24/7,26/7,30/7)	3	1 1/4	3	5/8	4 1/2	5/8
WPC48-4N4-AA	2	450 (19,37,61), 477 (19,37)	397.5 (18/1,24/7,26/7,30/7)	4	1 1/4	4 1/2	3/8	6 3/16	1 1/8
WPC55-2N-AA	1	500 (19,37,61), 550 (61,91), 556.5 (19,37)	477 (18/1,24/7,26/7,30/7)	1 5/8	1 1/4	3	3/8	4 1/2	5/8
WPC55-4N-AA	2	500 (19,37,61), 550 (61,91), 556.5 (19,37)	477 (18/1,24/7,26/7,30/7)	3	1 1/4	3	3/8	4 1/2	5/8
WPC55-4N4-AA	2	500 (19,37,61), 550 (61,91), 556.5 (19,37)	477 (18/1,24/7,26/7,30/7)	4	1 1/4	4	3/8	5 1/2	1 1/8
WPC65-2N-AA	1	600 (37,61,91), 636 (37), 650 (37,61,91)	556.5 (18/1,24/7,26/7)	1 3/4	1 1/2	3	1/2	4 3/4	5/8
WPC65-4N-AA	2	600 (37,61,91), 636 (37), 650 (37,61,91)	556.5 (18/1,24/7,26/7)	3	1 1/2	3	1/2	4 3/4	5/8
WPC65-4N4-AA	2	600 (37,61,91), 636 (37), 650 (37,61,91)	556.5 (18/1,24/7,26/7)	4	1 1/2	4	1/2	5 3/4	1 1/8
WPC71-2N-AA	1	650 (37,61,91), 700 (37,61,91), 715.5 (37,61)	636 (24/7,26/7), 605 (24/7,26/7,30/19)	1 3/4	1 1/2	3	1/2	4 3/4	5/8
WPC71-4N-AA	2	650 (37,61,91), 700 (37,61,91), 715.5 (37,61)	636 (24/7,26/7), 605 (24/7,26/7,30/19)	3	1 1/2	3	1/2	4 3/4	5/8
WPC71-4N4-AA	2	650 (37,61,91), 700 (37,61,91), 715.5 (37,61)	636 (24/7,26/7), 605 (24/7,26/7,30/19)	4	1 1/2	4	1/2	5 3/4	1 1/8
WPC79-2N-AA	1	795 MCM	—	1 3/4	1 1/2	3	5/8	4 3/4	5/8
WPC79-3N-AA	2	795 MCM	—	3	1 1/2	3	5/8	4 3/4	5/8
WPC80-2N-AA	1	750 (37,61,91), 795 (37,61), 800 (61,91)	636 (30/19), 666.6 (24/7,26/7), 715.5 (24/7)	1 3/4	1 1/2	3	1/2	4 3/4	5/8
WPC80-2N3-AA	1	750 (37,61,91), 795 (37,61), 800 (61,91)	636 (30/19), 666.6 (24/7,26/7), 715.5 (24/7)	2	1 1/2	3	1/2	4 3/4	5/8
WPC80-4N-AA	2	750 (37,61,91), 795 (37,61), 800 (61,91)	636 (30/19), 666.6 (24/7,26/7), 715.5 (24/7)	3	1 1/2	3	1/2	4 3/4	5/8
WPC80-4N4-AA	2	750 (37,61,91), 795 (37,61), 800 (61,91)	636 (30/19), 666.6 (24/7,26/7), 715.5 (24/7)	4	1 1/2	4	1/2	5 3/4	1 1/8
WPC90-2N-AA	1	800 (61,91), 874.5 (37,61), 900 (37,61,91)	715.5 (30/19), 795 (36/1,45/7,24/7,54/7)	2	1 1/2	3	1/2	4 3/4	5/8
WPC90-4N-AA	2	800 (61,91), 874.5 (37,61), 900 (37,61,91)	715.5 (30/19), 795 (36/1,45/7,24/7,54/7)	3	1 1/2	3	1/2	4 3/4	5/8
WPC90-4N4-AA	2	800 (61,91), 874.5 (37,61), 900 (37,61,91)	715.5 (30/19), 795 (36/1,45/7,24/7,54/7)	4	1 1/2	4	1/2	5 3/4	1 1/8
WPC95-2N-AA	1	900 (37,61), 954 (37,61)	795 (26/7, 30/19), 874.5 (54/7), 900 (45/7,54/7)	2	1 3/4	3	1/2	5	5/8
WPC95-4N-AA	2	900 (37,61), 954 (37,61)	795 (26/7, 30/19), 874.5 (54/7), 900 (45/7,54/7)	3	1 3/4	3	1/2	5	5/8
WPC95-4N4-AA	2	900 (37,61), 954 (37,61)	795 (26/7, 30/19), 874.5 (54/7), 900 (45/7,54/7)	4	1 3/4	4	1/2	6	1 1/8

continued

© 2011, AFL, all rights reserved. PP-3-00535, Revision 10, 1.26.2022
Specifications are subject to change without notice.

DOSSERT®

TYPE WPC-N-AA, WPCA-N-30-AA, WPCA-N-45-AA, WPCA-N-90-AA

Ordering Information

CATALOG NUMBER	FIG. NO.	CABLE RANGE		DIMENSIONS IN INCHES					
		ALUMINUM	ACSR	A	B	C	T	L	X
WPC103-2N-AA	1	954 (37/61), 1000 (37,61,91), 1033.5 (37,61)	954 (36/1,45/7,54/7)	2	1 3/4	3	1/2	5	5/8
WPC103-4N-AA	2	954 (37/61), 1000 (37,61,91), 1033.5 (37,61)	954 (36/1,45/7,54/7)	3	1 3/4	3	1/2	5	5/8
WPC103-4N4-AA	2	954 (37/61), 1000 (37,61,91), 1033.5 (37,61)	954 (36/1,45/7,54/7)	4	1 3/4	4	1/2	6	1 1/8
WPC103-4N4-AA-T3/4	2	954 (37/61), 1000 (37,61,91), 1033.5 (37,61)	954 (36/1,45/7,54/7)	4	1 3/4	4	3/4	6	1 1/8
WPC111-2N-AA	1	1100 (91,127), 1113 (61)	1033.5 (36/1,45/7,54/7)	2 1/2	1 3/4	3	1/2	5	5/8
WPC111-4N-AA	2	1100 (91,127), 1113 (61)	1033.5 (36/1,45/7,54/7)	3	1 3/4	3	1/2	5	5/8
WPC111-4N4-AA	2	1100 (91,127), 1113 (61)	1033.5 (36/1,45/7,54/7)	4	1 3/4	4	1/2	6	1 1/8
WPC127A-4N-AA	2	—	1272 MCM	3	2	3	3/4	5 1/4	5/8
WPC127A-4N4-AA	2	—	1272 MCM	4	2	4	11/16	5 1/2	1 1/8
WPC127R-4N-AA	2	1272 MCM ROPE LAY	—	3	2	3	11/16	5 1/2	5/8
WPC127R-4N4-AA	2	1272 MCM ROPE LAY	—	4	2	4 1/4	11/16	6 1/2	1 1/8
WPC135-2N-AA	1	1192.5 (61), 1200 (91,127), 1250 (91,127), 1272 (61), 1300 (91,127), 1351.5 (61)	1113 (45/7,54/19), 1192.5 (45/7,54/19)	2 1/2	2	3	9/16	5 1/4	5/8
WPC135-4N-AA	2	1192.5 (61), 1200 (91,127), 1250 (91,127), 1272 (61), 1300 (91,127), 1351.5 (61)	1113 (45/7,54/19), 1192.5 (45/7,54/19)	3	2	3	9/16	5 1/4	5/8
WPC135-4N4-AA	2	1192.5 (61), 1200 (91,127), 1250 (91,127), 1272 (61), 1300 (91,127), 1351.5 (61)	1113 (45/7,54/19), 1192.5 (45/7,54/19)	4	2	4	9/16	6 1/4	1 1/8
WPC151-4N-AA	2	1400 (91,127), 1431 (61), 1500 (91,127), 1510.5 (61)	1272 (45/7,54/19), 1351.5 (45/7,54/19)	3	2 1/4	3	3/4	5 5/8	5/8
WPC151-4N4-AA	2	1400 (91,127), 1431 (61), 1500 (91,127), 1510.5 (61)	1272 (45/7,54/19), 1351.5 (45/7,54/19)	4	2 1/4	4	3/4	6 5/8	1 1/8
WPC159-2N-AA	1	1590 MCM	—	2 1/2	2	3	11/16	5 5/16	5/8
WPC159-4N-AA	2	1590 MCM	—	3	2	3	11/16	5 5/16	5/8
WPC159-4N4-AA	2	1590 MCM	—	4	2	4	11/16	6 5/16	1 1/8
WPC170-2N-AA	1	1590 (61), 1600 (127,169), 1700 (127,169)	1431 (45/7,54/19), 1510.5 (45/7, 54/19)	2 1/2	2 1/4	3	3/4	5 1/2	5/8
WPC170-4N-AA	2	1590 (61), 1600 (127,169), 1700 (127,169)	1431 (45/7,54/19), 1510.5 (45/7, 54/19)	3	2 1/4	3	5/8	5 1/2	5/8
WPC170-4N4-AA	2	1590 (61), 1600 (127,169), 1700 (127,169)	1431 (45/7,54/19), 1510.5 (45/7, 54/19)	4	2 1/4	4	3/4	6 5/8	1 1/8
WPC190-4N-AA	2	1750 (127,169), 1800 (127,169), 1900 (127,169)	1590 (45/7,54/19), 1780 (84/19)	3	2 1/4	3	11/16	5 1/2	5/8
WPC190-4N4-AA	2	1750 (127,169), 1800 (127,169), 1900 (127,169)	1590 (45/7,54/19), 1780 (84/19)	4	2 1/4	4	11/16	6 1/2	1 1/8
WPC190-6N4-AA	3	1750 (127, 169), 1800 (127, 169), 1900 (127, 169)	1590 (45/7, 54/19), 1780 (84/19)	6	2 1/4	4	11/16	6 1/2	1 1/8
WPC205-4N4-AA	2	2049 MCM ACAR	—	4	2 1/4	4	3/4	6 9/16	1 1/8
WPC225-4N-AA	2	2000 (91,127,169), 2250 (91)	1780 (84/19), 2167 (72/7)	3	2 1/4	3	3/4	5 9/16	5/8
WPC225-4N4-AA	2	2000 (91,127,169), 2250 (91)	1780 (84/19), 2167 (72/7)	4	2 1/4	4	3/4	6 9/16	1 1/8
WPC225-6N4-AA	3	2000 (91,127,169), 2250 (91)	1780 (84/19), 2167 (72/7)	6	2 1/4	4	3/4	6 9/16	1 1/8
WPC234-4N4-AA	2	2336 MCM ACAR	—	4	2 1/4	4	3/4	6 9/16	1 1/8
WPC240R-4N4-AA	2	2.4 DI	—	4	2 3/4	4 1/4	1	7 1/4	1 1/8
WPC250-4N-AA	2	2500 (91,127,169)	2156 (84/19)	3	2 1/4	3	3/4	5 1/2	5/8
WPC250-4N4-AA	2	2500 (91,127,169)	2156 (84/19)	4	2 1/4	4	3/4	6 1/2	1 1/8
WPC300-4N-AA	2	2750 (91), 3000 (127,169)	2870 MCM	3	2 1/4	3	3/4	5 1/2	5/8
WPC300-4N4-AA	2	2750 (91), 3000 (127,169)	2870 MCM	4	2 1/4	4	3/4	6 5/8	1 1/8

© 2011, AFL, all rights reserved. PP-3-00535, Revision 10, 1.26.2022
Specifications are subject to change without notice.

DOSSERT®

TYPE WTP-N-AA

Flush Welded Terminal

Material

Aluminum Alloy

Notes

1. Add "U" for undrilled pad. EX: WTP400-4N4U-AA

2. Add "F" for finished pad on both sides. EX: WTP75-2NF-AA

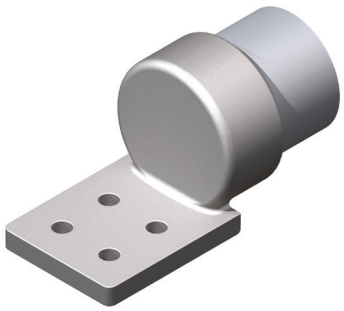

WTP-N-AA

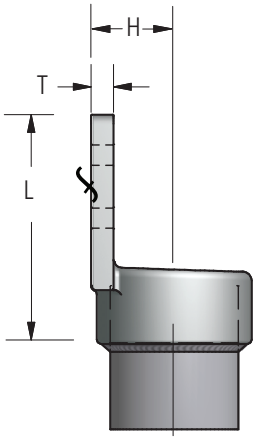

FIG. 1

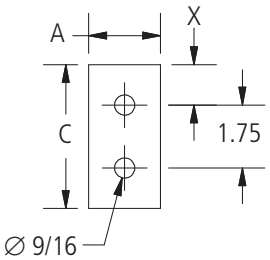

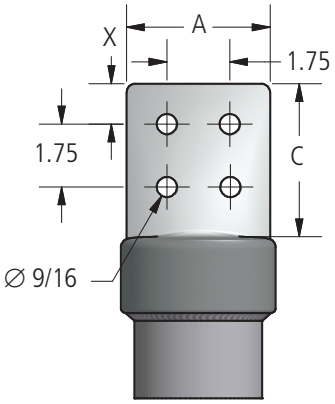

FIG. 2

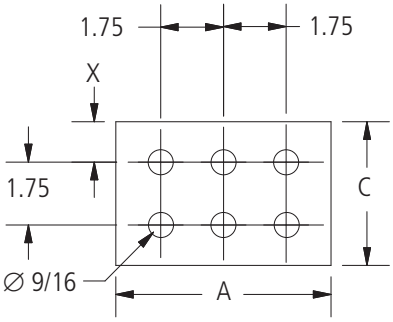

FIG. 3

continued

© 2011, AFL, all rights reserved. PP-3-00554, Revision 6, 10.6.2022
Specifications are subject to change without notice.

DOSSERT®

TYPE WTP-N-AA

Flush Welded Terminal

Ordering Information

CATALOG NUMBER	SPS	FIGURE NUMBER	DIMENSIONS IN INCHES					
			A	C	H	L	T	X
WTP75-2N-AA	3/4	1	2.00	3.00	1.31	4.31	0.38	0.63
WTP75-4N-AA	3/4	2	3.00	3.00	1.31	4.31	0.38	0.63
WTP100-2N-AA	1	1	2.00	3.00	1.19	4.25	0.50	0.63
WTP100-4N-AA	1	2	3.00	3.00	1.00	4.25	0.38	0.63
WTP100-4N4-AA	1	2	4.00	4.00	1.00	5.25	0.38	1.13
WTP125-2N-AA	1-1/4	1	2.00	3.00	1.25	4.63	0.50	0.63
WTP125-4N-AA	1-1/4	2	3.00	3.00	1.44	5.00	0.63	0.63
WTP125-4N4-AA	1-1/4	2	4.00	4.00	1.25	5.44	0.50	1.13
WTP150-2N-AA	1-1/2	1	2.00	3.00	1.56	5.00	0.50	0.63
WTP150-4N-AA	1-1/2	2	3.00	3.00	1.56	5.00	0.50	0.63
WTP150-4N4-AA	1-1/2	2	4.00	4.00	1.56	6.00	0.50	1.13
WTP200-2N-AA	2	1	2.00	3.00	1.69	4.88	0.50	0.63
WTP200-4N-AA	2	2	3.00	3.00	1.81	5.25	0.63	0.63
WTP200-4N4-AA	2	2	4.00	4.00	1.69	5.88	0.63	1.13
WTP250-2N-AA	2-1/2	1	2.00	3.00	1.94	5.25	0.63	0.63
WTP250-4N-AA	2-1/2	2	3.00	3.00	1.94	5.25	0.63	0.63
WTP250-4N4-AA	2-1/2	2	4.00	4.00	1.88	6.25	0.63	1.13
WTP300-2N-AA	3	1	2.00	3.00	2.31	5.63	0.63	0.63
WTP300-4N-AA	3	2	3.00	3.00	2.25	5.38	0.63	0.63
WTP300-4N4-AA	3	2	4.00	4.00	2.25	6.38	0.63	1.13
WTP300-5N4-AA	3	3	5.00	4.00	2.31	6.63	0.63	1.13
WTP300-6N4-AA	3	3	6.00	4.00	2.31	6.63	0.63	1.13
WTP350-2N-AA	3-1/2	1	2.00	3.00	2.56	5.50	0.75	0.63
WTP350-4N-AA	3-1/2	2	3.00	3.00	2.56	5.50	0.75	0.63
WTP350-4N4-AA	3-1/2	2	4.00	4.00	2.56	6.50	0.75	1.13
WTP350-5N4-AA	3-1/2	3	5.00	4.00	2.56	6.88	0.75	1.13
WTP350-6N4-AA	3-1/2	3	6.00	4.00	2.56	6.88	0.75	1.13
WTP400-4N-AA	4	2	3.00	3.50	2.97	6.38	0.75	0.63
WTP400-4N4-AA	4	2	4.00	4.00	2.97	7.50	0.75	1.13
WTP400-5N4-AA	4	3	5.00	4.00	2.88	7.13	0.75	1.13
WTP400-6N4-AA	4	3	6.00	4.00	2.88	7.13	0.75	1.13
WTP500-4N-AA	5	2	3.00	3.00	3.44	6.63	0.88	0.63
WTP500-4N4-AA	5	2	4.00	4.00	3.44	7.00	0.88	1.13
WTP500-5N4-AA	5	3	5.00	4.00	3.44	7.63	0.88	1.13
WTP500-6N4-AA	5	3	6.00	4.00	3.44	7.63	0.88	1.13
WTP600-4N-AA	6	2	3.00	3.00	3.94	7.13	1.00	0.63
WTP600-4N4-AA	6	2	4.00	4.50	4.25	8.94	1.06	1.13
WTP600-5N4-AA	6	3	5.00	4.00	3.94	8.13	1.00	1.13
WTP600-6N4-AA	6	3	6.00	4.00	3.94	7.00	1.00	1.13
WTP800R-4N4-AA	8" OD	2	4.00	4.00	5.08	8.13	1.25	1.13
WTP800R-6N4-AA	8" OD	3	6.00	4.00	5.02	8.00	1.25	1.13

© 2011, AFL, all rights reserved. PP-3-00554, Revision 6, 10.6.2022
Specifications are subject to change without notice.

DOSSERT®

TYPE WTPA-N-45-AA

Flush Welded Terminal, 45 Degree

Material

Aluminum Alloy

Notes

1. Add "U" for undrilled pad. EX: WTPA400-4N4U-45-AA

2. Add "F" for finished pad on both sides. EX: WTPA75-2NF-AA



WTPA-N-45-AA

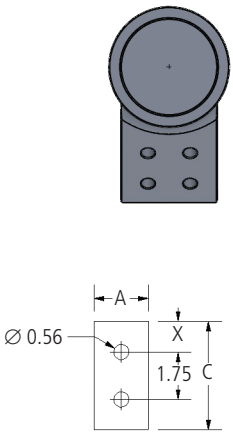

FIG. 1

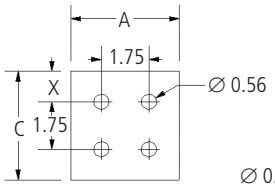

FIG. 2

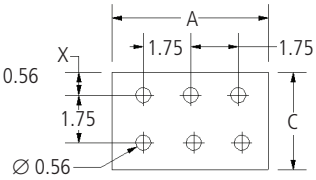

FIG. 3

continued

© 2011, AFL, all rights reserved. PP-3-00858, Revision 5, 4.16.19
Specifications are subject to change without notice.

DOSSERT®

TYPE WTPA-N-45-AA

Flush Welded Terminal, 45 Degree

Ordering Information

CATALOG NUMBER	SPS	FIGURE NUMBER	DIMENSIONS IN INCHES			
			A	C	T	X
WTPA75-2N-45-AA	3/4	1	2.00	3.00	0.38	0.63
WTPA75-4N-45-AA	3/4	2	3.00	3.00	0.38	0.63
WTPA100-2N-45-AA	1	1	2.00	3.00	0.50	0.63
WTPA100-4N-45-AA	1	2	3.00	3.00	0.38	0.63
WTPA100-4N4-45-AA	1	2	4.00	4.00	0.38	1.13
WTPA125-2N-45-AA	1-1/4	1	2.00	3.00	0.50	0.63
WTPA125-4N-45-AA	1-1/4	2	3.00	3.00	0.63	0.63
WTPA125-4N4-45-AA	1-1/4	2	4.00	4.00	0.50	1.13
WTPA150-2N-45-AA	1-1/2	1	2.00	3.00	0.50	0.63
WTPA150-4N-45-AA	1-1/2	2	3.00	3.00	0.50	0.63
WTPA150-4N4-45-AA	1-1/2	2	4.00	4.00	0.50	1.13
WTPA200-2N-45-AA	2	1	2.00	3.00	0.50	0.63
WTPA200-4N-45-AA	2	2	3.00	3.13	0.50	0.63
WTPA200-4N4-45-AA	2	2	4.00	4.00	0.50	1.13
WTPA250-2N-45-AA	2-1/2	1	2.00	3.25	0.63	0.63
WTPA250-4N-45-AA	2-1/2	2	3.00	3.00	0.63	0.63
WTPA250-4N4-45-AA	2-1/2	2	4.00	4.00	0.63	1.13
WTPA300-2N-45-AA	3	1	2.00	3.00	0.63	0.63
WTPA300-4N-45-AA	3	2	3.00	3.00	0.63	0.63
WTPA300-4N4-45-AA	3	2	4.00	4.00	0.75	1.13
WTPA300-5N4-45-AA	3	3	5.00	4.00	0.63	1.13
WTPA300-6N4-45-AA	3	3	6.00	4.00	0.63	1.13
WTPA350-2N-45-AA	3-1/2	1	2.00	3.00	0.75	0.63
WTPA350-4N-45-AA	3-1/2	2	3.00	3.00	0.75	0.63
WTPA350-4N4-45-AA	3-1/2	2	4.00	4.00	0.75	1.13
WTPA350-5N4-45-AA	3-1/2	3	5.00	4.00	0.75	1.13
WTPA350-6N4-45-AA	3-1/2	3	6.00	4.00	0.75	1.13
WTPA400-4N-45-AA	4	2	3.00	3.00	0.75	0.63
WTPA400-4N4-45-AA	4	2	4.00	4.00	0.75	1.13
WTPA400-5N4-45-AA	4	3	5.00	4.00	0.75	1.13
WTPA400-6N4-45-AA	4	3	6.00	4.00	0.75	1.13
WTPA500-4N-45-AA	5	2	3.00	3.00	0.88	0.63
WTPA500-4N4-45-AA	5	2	4.00	4.00	0.88	1.13
WTPA500-5N4-45-AA	5	3	5.00	4.00	0.88	1.13
WTPA500-6N4-45-AA	5	3	6.00	4.00	0.88	1.13
WTPA600-4N-45-AA	6	2	3.00	3.00	1.00	0.63
WTPA600-4N4-45-AA	6	2	4.00	4.00	0.63	1.13
WTPA600-5N4-45-AA	6	3	5.00	4.00	1.00	1.13
WTPA600-6N4-45-AA	6	3	6.00	4.00	0.63	1.13
WTPA800R-4N4-45-AA	8" OD	2	4.00	4.00	1.25	1.13
WTPA800R-6N4-45-AA	8" OD	3	6.00	4.00	1.25	1.13

© 2011, AFL, all rights reserved. PP-3-00858, Revision 5, 4.16.19
Specifications are subject to change without notice.

DOSSERT®

TYPE WTPA-N-90-AA

Flush Welded Terminal, 90 Degree

Material

Aluminum Alloy

Notes

1. Add "U" for undrilled pad. EX: WTPA400-4N4U-90-AA

2. Add "F" for finished pad on both sides. EX: WTPA75-2NF-90-AA

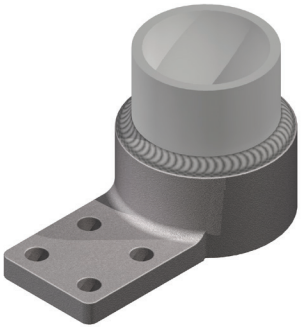

WTPA-N-90-AA

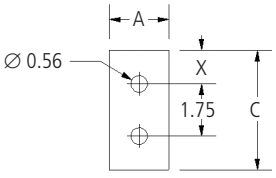

FIG. 1

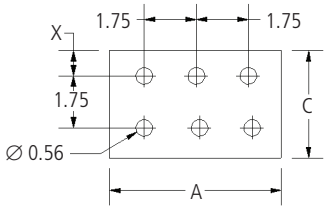

FIG. 3

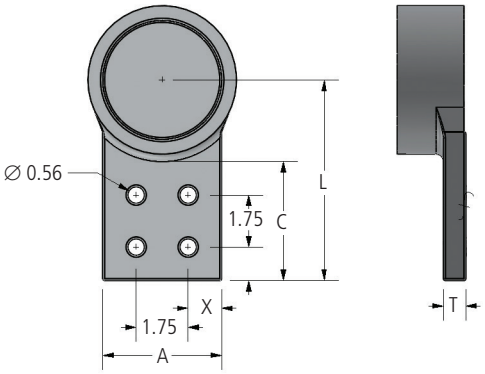

FIG. 2

continued

© 2011, AFL, all rights reserved. PP-3-00859, Revision 6, 6.2.2022
Specifications are subject to change without notice.

DOSSERT®

TYPE WTPA-N-90-AA

Flush Welded Terminal, 90 Degree

Ordering Information

CATALOG NUMBER	SPS	FIGURE NUMBER	DIMENSIONS IN INCHES				
			A	C	L	T	X
WTPA75-2N-90-AA	3/4	1	2.00	3.00	3.88	0.38	0.63
WTPA75-4N-90-AA	3/4	2	3.00	3.00	3.88	0.38	0.63
WTPA100-2N-90-AA	1	1	2.00	3.00	4.19	0.38	0.63
WTPA100-4N-90-AA	1	2	3.00	3.00	4.19	0.38	0.63
WTPA100-4N4-90-AA	1	2	4.00	4.00	5.19	0.38	1.13
WTPA125-2N-90-AA	1-1/4	1	2.00	3.00	4.50	0.63	0.63
WTPA125-4N-90-AA	1-1/4	2	3.00	3.00	4.50	0.63	0.63
WTPA125-4N4-90-AA	1-1/4	2	4.00	4.00	5.63	0.50	1.13
WTPA150-2N-90-AA	1-1/2	1	2.00	3.00	4.69	0.50	0.63
WTPA150-4N-90-AA	1-1/2	2	3.00	3.00	4.69	0.50	0.63
WTPA150-4N4-90-AA	1-1/2	2	4.00	4.00	5.63	0.50	1.13
WTPA200-2N-90-AA	2	1	2.00	3.00	4.75	0.50	0.63
WTPA200-4N-90-AA	2	2	3.00	3.00	4.75	0.50	0.63
WTPA200-4N4-90-AA	2	2	4.00	4.00	5.75	0.50	1.13
WTPA250-2N-90-AA	2-1/2	1	2.50	3.00	6.19	0.63	0.63
WTPA250-4N-90-AA	2-1/2	2	3.00	3.00	5.20	0.63	0.63
WTPA250-4N4-90-AA	2-1/2	2	4.00	4.00	6.19	0.63	1.13
WTPA300-2N-90-AA	3	1	2.00	3.00	5.44	0.63	0.63
WTPA300-4N-90-AA	3	2	3.00	3.00	5.41	0.63	0.63
WTPA300-4N4-90-AA	3	2	4.00	4.00	6.44	0.63	1.13
WTPA300-5N4-90-AA	3	3	5.00	4.00	6.44	0.63	1.13
WTPA300-6N4-90-AA	3	3	6.00	4.00	6.44	0.63	1.13
WTPA350-2N-90-AA	3-1/2	1	2.00	3.00	5.72	0.75	0.63
WTPA350-4N-90-AA	3-1/2	2	3.00	3.00	5.75	0.75	0.63
WTPA350-4N4-90-AA	3-1/2	2	4.00	4.00	6.75	0.75	1.13
WTPA350-5N4-90-AA	3-1/2	3	5.00	4.00	6.75	0.75	1.13
WTPA350-6N4-90-AA	3-1/2	3	6.00	4.00	6.75	0.75	1.13
WTPA400-4N-90-AA	4	2	3.00	3.00	6.52	0.75	0.63
WTPA400-4N4-90-AA	4	2	4.00	4.00	7.02	0.75	1.13
WTPA400-5N4-90-AA	4	3	5.00	4.00	7.02	0.75	1.13
WTPA400-6N4-90-AA	4	3	6.00	4.00	7.02	0.75	1.13
WTPA500-4N-90-AA	5	2	3.00	3.50	7.06	0.88	0.63
WTPA500-4N4-90-AA	5	2	4.00	4.00	7.56	0.88	1.13
WTPA500-5N4-90-AA	5	3	5.00	4.00	7.56	0.88	1.13
WTPA500-6N4-90-AA	5	3	6.00	4.50	8.12	1.13	1.13
WTPA600-4N-90-AA	6	2	3.00	3.00	7.00	1.00	0.63
WTPA600-4N4-90-AA	6	2	4.00	4.00	8.22	1.00	1.13
WTPA600-5N4-90-AA	6	3	5.00	4.00	8.22	1.00	1.13
WTPA600-6N4-90-AA	6	3	6.00	4.00	8.22	1.00	1.13
WTPA800R-4N4-90-AA	8" OD	2	4.00	4.00	9.33	1.25	1.13
WTPA800R-6N4-90-AA	8" OD	3	6.00	4.00	9.33	1.25	1.13

© 2011, AFL, all rights reserved. PP-3-00859, Revision 6, 6.2.2022
Specifications are subject to change without notice.

DOSSERT®

TYPE WTPC-N-AA

External Center Form Welded Terminal

Material

Aluminum Alloy

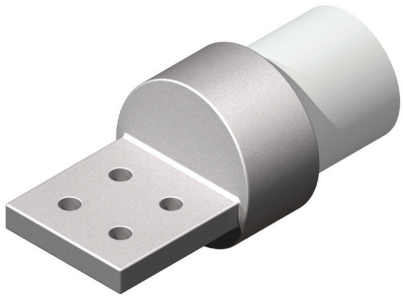

Notes

- Add "U" for undrilled
- Add "F" for finished on both sides EX: WTPC75-2NF-AA

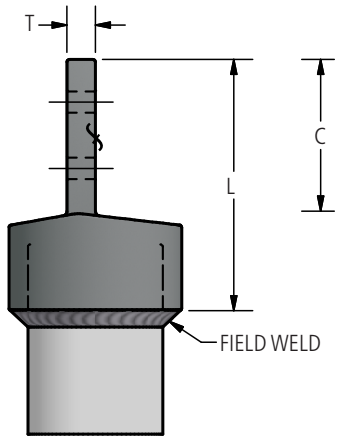

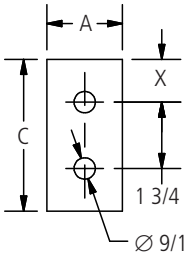

FIG. 1

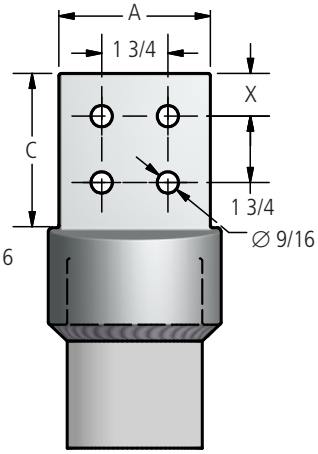

FIG. 2

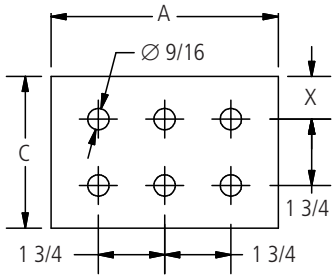

FIG. 3

Ordering Information

CATALOG NUMBER	FIGURE NUMBER	SPS	DIMENSIONS IN INCHES				
			A	C	L	T	X
WTPC75-2N-AA	1	3/4	2	3	4 5/8	3/8	5/8
WTPC75-4N-AA	2	3/4	3	3	4 5/8	3/8	5/8
WTPC100-2N-AA	1	1	2	3	5	3/8	5/8
WTPC100-4N-AA	2	1	3	3	5	3/8	5/8
WTPC100-4N4-AA	2	1	4	4	6	3/8	1 1/8
WTPC125-2N-AA	1	1 1/4	2	3	5	1/2	5/8
WTPC125-4N4-AA	2	1 1/4	4	4	6	1/2	1 1/8
WTPC125-4N-AA	2	1 1/4	3	3	5	1/2	5/8
WTPC150-2N-AA	1	1 1/2	2	3	5	5/8	5/8
WTPC150-4N4-AA	2	1 1/2	4	4	6 1/32	1/2	1 1/8
WTPC150-4N-AA	2	1 1/2	3	3	4 5/8	1/2	5/8
WTPC200-2N-AA	1	2	2	3	5	1/2	5/8
WTPC200-4N4-AA	2	2	4	4	6	1/2	1 1/8
WTPC200-4N-AA	2	2	3	3	5	1/2	5/8
WTPC250-2N-AA	1	2 1/2	3	3	5	5/8	5/8
WTPC250-4N4-AA	2	2 1/2	4	4	6	5/8	1 1/8
WTPC250-4N-AA	2	2 1/2	3	3	5	5/8	5/8
WTPC300-2N-AA	1	3	2 1/2	3	5 1/4	3/4	5/8
WTPC300-4N4-AA	2	3	4	4	6 5/8	3/4	1 1/8
WTPC300-4N-AA	2	3	3	3	5 1/4	3/4	5/8
WTPC350-4N-AA	2	3 1/2	3	3	5 5/8	3/4	5/8
WTPC350-4N4-AA	2	3 1/2	4	4	6 5/8	3/4	1 1/8
WTPC400-2N-AA	1	4	2 1/2	3	6	3/4	5/8
WTPC400-4N4-AA	2	4	4	4	7	7/8	1 1/8
WTPC400-4N-AA	2	4	3	3	6	3/4	5/8
WTPC400-5N4-AA	3	4	5	4	6 3/4	3/4	1 1/8
WTPC400-6N4-AA	3	4	6	4 1/2	7 1/2	7/8	1 1/8
WTPC500-4N-AA	2	5	3	3 1/2	6 7/8	3/4	5/8
WTPC500-4N4-AA	2	5	4	4	7 3/8	3/4	1 1/8
WTPC500-5N4-AA	3	5	5	4	7 3/8	7/8	1 1/8
WTPC500-6N4-AA	3	5	6	4	7 3/8	7/8	1 1/8
WTPC600-4N4-AA	2	6	4	4	7 7/8	1	1 1/8
WTPC600-6N4-AA	3	6	6 1/8	4	7 7/8	1	1 1/8
WTPC800-4N4-AA	2	8	4	4	7 7/8	1 1/4	1 1/8
WTPC800-6N4-AA	3	8	6	4	7 7/8	1 1/4	1 1/8

© 2011, AFL, all rights reserved. PP-3-00556, Revision 8, 11.16.2022
Specifications are subject to change without notice.

DOSSERT®

TYPE WTPI-N-AA, WTPIA-N-45-AA, WTPIA-N-90-AA

Internal Welded Terminal

WTPI-N-AA the pad and pipe run parallel, WTPIA-N-45-AA the pad is at a 45° angle to the pipe, and WTPI-N-90-AA the pad is at a 90° angle to the pipe.

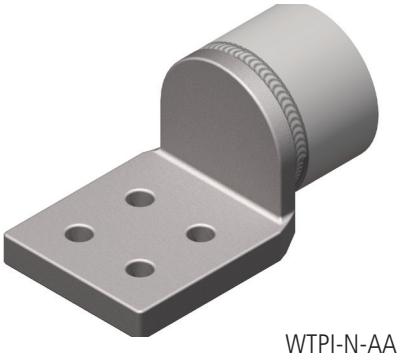

WTPI-N-AA

Material

Aluminum

Notes

- Add "U" for undrilled
- Add "F" for finished on both sides. EX: WTP75-2NF-AA
- For a 1" SPS pipe to a 3" NEMA pad at 45°, order: WTPIA100-4N-45-AA
- For a 2" SPS pipe to a 4" NEMA pad at 90°, order: WTPIA200-4N4-90-AA
- For a 2" SPS pipe to a 4" NEMA pad finished on both sides, order: WTPI200-4N4F-AA
- For a 1" SPS pipe to a 4" pad undrilled order: WTPI100-4N4U-AA

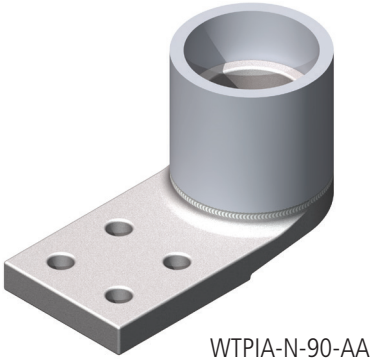

WTPIA-N-90-AA



WTPI-N-AA



WTPIA-N-45-AA

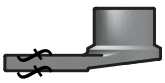

WTPIA-N-90-AA

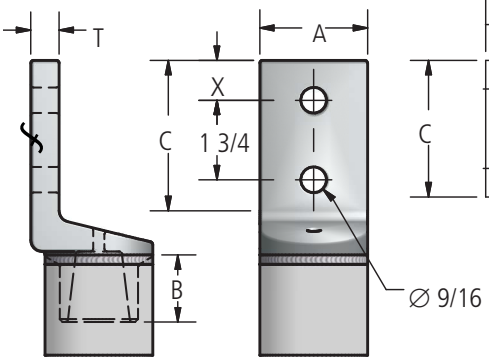

FIG. 1

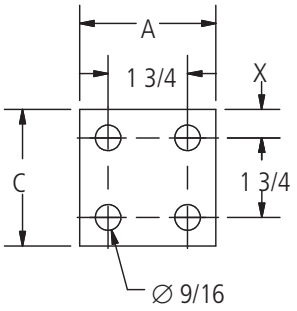

FIG. 2

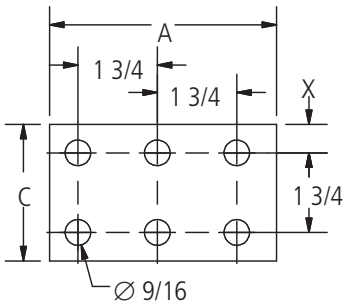

FIG. 3

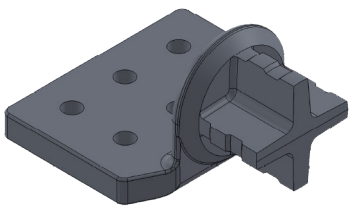

CROSS DESIGN

© 2011, AFL, all rights reserved. PP-3-00568, Revision 3, 3.1.2023
Specifications are subject to change without notice.

DOSSERT®

TYPE WTPI-N-AA, WTPIA-N-45-AA, WTPIA-N-90-AA

Internal Welded Terminal

Ordering Information

CATALOG NUMBER		SPS	FIG NUMBER	DIMENSIONS IN INCHES				
SCH 40	SCH 80			A	B	C	T	X
WTPI75-2N-AA	WTPI75E-2N-AA	3/4	1	1-1/2	3/4	3	3/8	5/8
WTPI100-2N-AA	WTPI100E-2N-AA	1	1	1-1/2	3/4	3	3/8	5/8
WTPI100-4N-AA	WTPI100E-4N-AA	1	2	3	3/4	3	3/8	5/8
WTPI100-4N4-AA	WTPI100E-4N4-AA	1	2	4	3/4	4	3/8	1-1/8
WTPI150-2N-AA	WTPI150E-2N-AA	1-1/2	1	2	1	3	1/2	5/8
WTPI150-4N-AA	WTPI150E-4N-AA	1-1/2	2	3	1	3	1/2	5/8
WTPI150-4N4-AA	WTPI150E-4N4-AA	1-1/2	2	4	1	4	1/2	1-1/8
WTPI200-2N-AA	WTPI200E-2N-AA	2	1	2	1-1/4	3	5/8	5/8
WTPI200-4N-AA	WTPI200E-4N-AA	2	2	3	1-1/4	3	5/8	5/8
WTPI200-4N4-AA	WTPI200E-4N4-AA	2	2	4	1-1/4	4	5/8	1-1/8
WTPI200-6N4-AA*	WTPI200E-6N4-AA*	2	3	6	2	4	5/8	1-1/8
WTPI250-2N-AA	WTPI250E-2N-AA	2-1/2	1	2	1-1/2	3	5/8	5/8
WTPI250-4N-AA	WTPI250E-4N-AA	2-1/2	2	3	1-1/2	3	5/8	5/8
WTPI250-4N4-AA	WTPI250E-4N4-AA	2-1/2	2	4	1-1/2	4	5/8	1-1/8
WTPI300-2N-AA	WTPI300E-2N-AA	3	1	2	1-3/4	3	5/8	5/8
WTPI300-4N-AA	WTPI300E-4N-AA	3	2	3	1-3/4	3	3/4	5/8
WTPI300-4N4-AA	WTPI300E-4N4-AA	3	2	4	1-3/4	4	5/8	1-1/8
WTPI300-6N4-AA*	WTPI300E-6N4-AA*	3	3	6	2	4	3/4	1-1/8
WTPI350-4N-AA	WTPI350E-4N-AA	3-1/2	2	3	2	3	3/4	5/8
WTPI350-4N4-AA*	WTPI350E-4N4-AA*	3-1/2	2	4	2	4	3/4	1-1/8
WTPI400-6N4-AA	WTPI400E-6N4-AA	4	3	6	2-1/4	4	3/4	1-1/8
WTPI400-4N-AA	WTPI400E-4N-AA	4	2	3	2-1/4	3	3/4	5/8
WTPI400-4N4-AA	WTPI400E-4N4-AA	4	2	4	2-1/4	4	3/4	1-1/8
WTPI500-4N-AA	WTPI500E-4N-AA	5	2	3	2-7/8	3	7/8	5/8
WTPI500-4N4-AA	WTPI500E-4N4-AA	5	2	4	2-7/8	4	7/8	1-1/8
WTPI600-4N-AA	WTPI600E-4N-AA	6	2	3	3-3/8	3	1	5/8
WTPI600-4N4-AA	WTPI600E-4N4-AA	6	2	4	3-3/8	4	1	1-1/8

* Cross Design

© 2011, AFL, all rights reserved. PP-3-00568, Revision 3, 3.1.2023
Specifications are subject to change without notice.

230 kV Aluminum Welded Bus Supports

DOSSERT®

TYPE WTPIC-N-AA

Internal Center Formed Welded Terminal

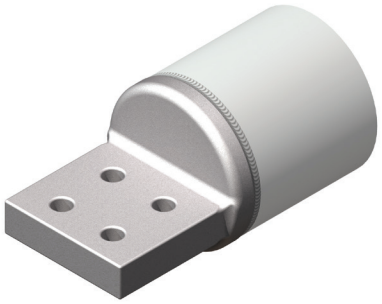

Material

Aluminum Alloy

Notes

1. Add "U" for undrilled. EX: WTPIC100-2NU-AA

2. Add "F" for finished on both sides. EX: WTPIC100-2NF-AA

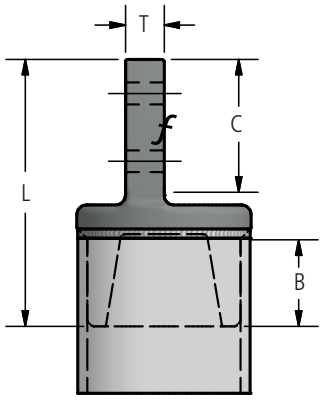

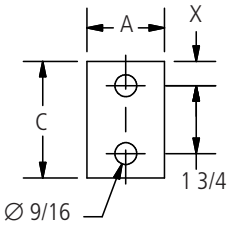

FIG. 1

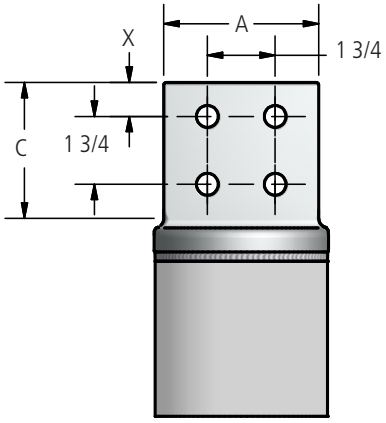

FIG. 2

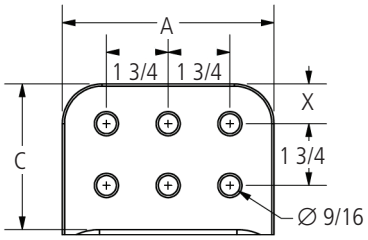

FIG. 3

Ordering Information

CATALOG NUMBER		SPS	FIG. NO.	DIMENSIONS IN INCHES					
SCH 40	SCH 80			A	B	C	L	T	X
WTPIC100-2N-AA	WTPIC100E-2N-AA	1	1	2	3/4	3	4 1/4	3/8	5/8
WTPIC100-4N-AA	WTPIC100E-4N-AA	1	2	3	3/4	3	4 1/4	3/8	5/8
WTPIC150-2N-AA	WTPIC150E-2N-AA	1-1/2	2	2	1	3	4 1/2	1/2	5/8
WTPIC150-4N-AA	WTPIC150E-4N-AA	1-1/2	1	3	1	3	4 1/2	1/2	5/8
WTPIC200-2N-AA	WTPIC200E-2N-AA	2	2	2	1 1/4	3	5 1/4	5/8	5/8
WTPIC200-4N4-AA	WTPIC200E-4N4-AA	2	1	4	1 1/4	4	6 1/4	5/8	1 1/8
WTPIC200-4N-AA	WTPIC200E-4N-AA	2	2	3	1 1/4	3	5 1/4	5/8	5/8
WTPIC250-2N-AA	WTPIC250E-2N-AA	2-1/2	2	2	1 1/2	3	5 1/2	5/8	5/8
WTPIC250-4N4-AA	WTPIC250E-4N4-AA	2-1/2	1	4	1 1/2	4	6 1/2	5/8	1 1/8
WTPIC250-4N-AA	WTPIC250E-4N-AA	2-1/2	2	3	1 1/2	3	5 1/2	5/8	5/8
WTPIC300-4N4-AA	WTPIC300E-4N4-AA	3	2	4	1 3/4	4	6 3/4	5/8	1 1/8
WTPIC300-4N-AA	WTPIC300E-4N-AA	3	2	3	1 3/4	3	5 3/4	5/8	5/8
WTPIC350-4N4-AA	WTPIC350E-4N4-AA	3-1/2	2	4	2	4	7 1/4	3/4	1 1/8
WTPIC350-4N-AA	WTPIC350E-4N-AA	3-1/2	2	3	2	3	6 1/4	3/4	5/8
WTPIC400-4N4-AA	WTPIC400E-4N4-AA	4	2	4	2 1/4	4	7 1/4	3/4	1 1/8
WTPIC400-4N-AA	WTPIC400E-4N-AA	4	2	3	2 1/4	3	6 1/4	3/4	5/8
WTPIC500-4N4-AA	WTPIC500E-4N4-AA	5	2	4	2 1/2	4	8 1/8	7/8	1 1/8
WTPIC500-4N-AA	WTPIC500E-4N-AA	5	2	3	2 1/2	3	7 1/8	7/8	5/8
WTPIC600-4N4-AA	WTPIC600E-4N4-AA	6	2	4	3 3/8	4	8 3/4	1	1 1/8
WTPIC600-6N4-AA	WTPIC600E-6N4-AA	6	3	6	3 3/8	4	9 7/16	1	1 1/8
WTPIC800-4N4-AA	WTPIC800E-4N4-AA	8	2	4	3 3/8	4	8 3/4	1 1/8	1 1/8

© 2011, AFL, all rights reserved. PP-3-00569, Revision 2, 11.3.2022
Specifications are subject to change without notice.

DOSSERT®

TYPE WTPO-N-AA, WTPOA-N-45-AA, WTPOA-N-90-AA

WTPO-N-AA flush half sleeve welded terminal, WTPOA-N-45-AA flush 45° half sleeve welded terminal, and WTPOA-N-90-AA flush 90° half sleeve welded terminal.

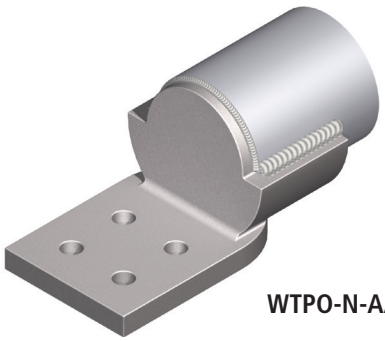

WTPO-N-AA

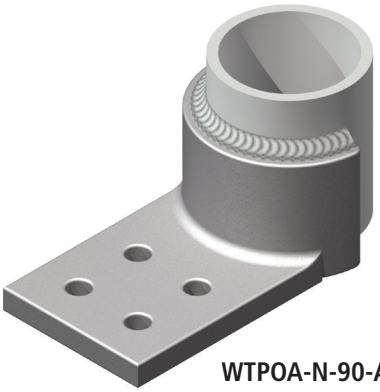

WTPOA-N-90-AA

Material

Aluminum Alloy

Notes

1. To specify contact finish on top surface of pad in addition to bottom surface add letter "F" to the catalog number. Ex: 2NF - 4NF - 4N4F.
2. For a 45° flush half sleeve terminal, 2" SPS, and 4", 4 hole NEMA pad order: WTPOA200-4N4-45-AA.
3. For a 90° flush half sleeve terminal, 2" SPS, and 4", 4 hole NEMA pad finished on both sides order: WTPOA200-4N4F-90-AA.



WTPO-N-AA

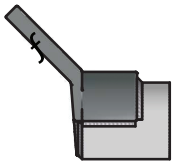

WTPOA-N-45-AA

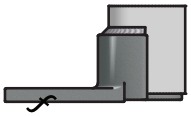

WTPOA-N-90-AA

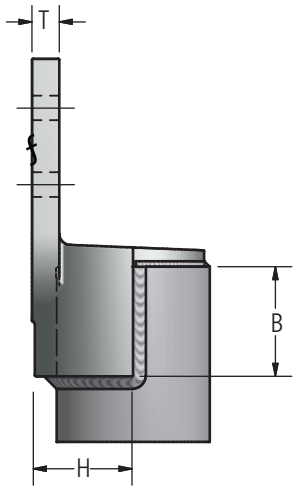

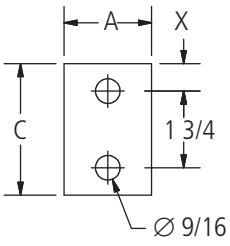

FIG. 1

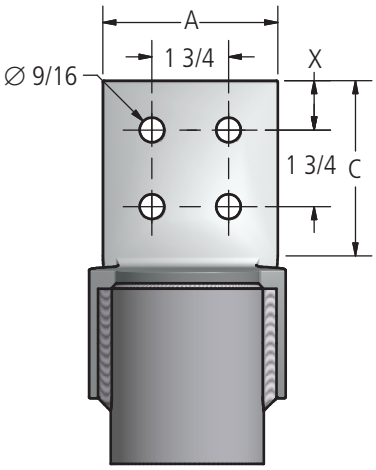

FIG. 2

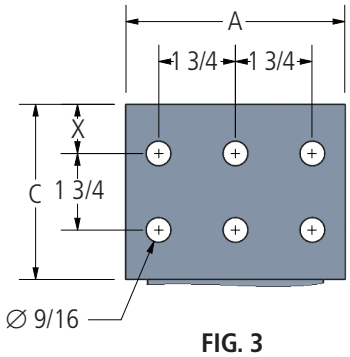

FIG. 3

© 2011, AFL, all rights reserved. PP-3-00572, Revision 5, 11.16.2022
Specifications are subject to change without notice.

DOSSERT®

TYPE WTPO-N-AA, WTPOA-N-45-AA, WTPOA-N-90-AA

Ordering Information

SPS	CATALOG NUMBER	FIGURE NUMBER	ANGLE	DIMENSIONS IN INCHES					
				A	B	C	H	T	X
3/4	WTPO75-2N-AA	1	-	1 5/8	1	3	1	3/8	5/8
3/4	WTPOA75-2N-45-AA	1	45°	1 5/8	1	3	-	3/8	5/8
3/4	WTPOA75-2N-90-AA	1	90°	1 5/8	1	3	-	3/8	5/8
3/4	WTPO75-4N-AA	2	-	3	1	3	1	3/8	5/8
3/4	WTPOA75-4N-45-AA	2	45°	3	1	3	-	3/8	5/8
3/4	WTPOA75-4N-90-AA	2	90°	3	1	3	-	3/8	5/8
1	WTPO100-2N-AA	1	-	1 15/16	1 1/8	3	1 3/16	3/8	5/8
1	WTPOA100-2N-45-AA	1	45°	1 15/16	1 1/8	3	-	3/8	5/8
1	WTPOA100-2N-90-AA	1	90°	1 15/16	1 1/4	3	-	3/8	5/8
1	WTPO100-4N-AA	2	-	3	1 1/8	3	1 3/16	3/8	5/8
1	WTPOA100-4N-45-AA	2	45°	3	1 1/8	3	-	3/8	5/8
1	WTPOA100-4N-90-AA	2	90°	3	1 1/4	3	-	3/8	5/8
1 1/4	WTPO125-2N-AA	1	-	2	1 3/8	3	1 3/8	3/8	5/8
1 1/4	WTPOA125-2N-45-AA	1	45°	2	1 3/8	3	-	3/8	5/8
1 1/4	WTPOA125-2N-90-AA	1	90°	2	1 3/8	3	-	1/2	5/8
1 1/4	WTPO125-4N-AA	2	-	3	1 3/8	3	1 3/8	7/16	5/8
1 1/4	WTPOA125-4N-45-AA	2	45°	3	1 3/8	3	-	7/16	5/8
1 1/4	WTPOA125-4N-90-AA	2	90°	3	1 3/8	3	-	1/2	5/8
1 1/4	WTPOA125-4N4-90-AA	2	90°	4	1 3/8	4	-	1/2	1 1/8
1 1/2	WTPO150-2N-AA	1	-	2	1 5/8	3	1 15/32	7/16	5/8
1 1/2	WTPOA150-2N-45-AA	1	45°	2	1 5/8	3	-	1/2	5/8
1 1/2	WTPOA150-2N-90-AA	1	90°	2	1 5/8	3	-	1/2	5/8
1 1/2	WTPO150-4N-AA	2	-	3	1 5/8	3	1 15/32	1/2	5/8
1 1/2	WTPOA150-4N-45-AA	2	45°	3	1 5/8	3	-	1/2	5/8
1 1/2	WTPOA150-4N-90-AA	2	90°	3	1 5/8	3	-	1/2	5/8
1 1/2	WTPO150-4N4-AA	2	-	4	1 5/8	4	1 15/32	1/2	1 1/8
1 1/2	WTPOA150-4N4-45-AA	2	45°	4	1 5/8	4	-	1/2	1 1/8
1 1/2	WTPOA150-4N4-90-AA	2	90°	4	1 5/8	4	-	1/2	1 1/8
2	WTPO200-2N-AA	1	-	2	1 7/8	3	1 23/32	7/16	5/8
2	WTPOA200-2N-45-AA	1	45°	2	1 7/8	3	-	7/16	5/8
2	WTPOA200-2N-90-AA	1	90°	2	1 7/8	3	-	1/2	5/8
2	WTPO200-4N-AA	2	-	3	1 7/8	3	1 23/32	1/2	5/8
2	WTPOA200-4N-45-AA	2	45°	3	1 7/8	3	-	1/2	5/8
2	WTPOA200-4N-90-AA	2	90°	3	1 7/8	3	-	7/16	5/8
2	WTPO200-4N4-AA	2	-	4	1 7/8	4	1 23/32	1/2	1 1/8
2	WTPOA200-4N4-45-AA	2	45°	4	1 7/8	4	-	1/2	1 1/8
2	WTPOA200-4N4-90-AA	2	90°	4	1 7/8	4	-	7/16	1 1/8
2 1/2	WTPO250-2N-AA	1	-	2	2 1/4	3	1 31/32	5/8	5/8
2 1/2	WTPOA250-2N-45-AA	1	45°	2	2 1/4	3	-	5/8	5/8
2 1/2	WTPOA250-2N-90-AA	1	90°	2	2 1/4	3	-	5/8	5/8
2 1/2	WTPO250-4N-AA	2	-	3	2 1/4	3	1 31/32	5/8	5/8
2 1/2	WTPOA250-4N-45-AA	2	45°	3	2 1/4	3	-	5/8	5/8
2 1/2	WTPOA250-4N-90-AA	2	90°	3	2 1/4	3	-	5/8	5/8
2 1/2	WTPO250-4N4-AA	2	-	4	2 1/4	4	1 31/32	5/8	1 1/8
2 1/2	WTPOA250-4N4-45-AA	2	45°	4	2 1/4	4	-	5/8	1 1/8
2 1/2	WTPOA250-4N4-90-AA	2	90°	4	2 1/4	4	-	5/8	1 1/8
3	WTPO300-2N-AA	1	-	2	2 1/2	3	2 11/32	5/8	5/8
3	WTPOA300-2N-45-AA	1	45°	2	2 1/2	3	-	5/8	5/8
3	WTPOA300-2N-90-AA	1	90°	2	2 1/2	3	-	5/8	5/8

© 2011, AFL, all rights reserved. PP-3-00572, Revision 5, 11.16.2022
Specifications are subject to change without notice.

DOSSERT®

TYPE WTPO-N-AA, WTPOA-N-45-AA, WTPOA-N-90-AA

Ordering Information

SPS	CATALOG NUMBER	FIGURE NUMBER	ANGLE	DIMENSIONS IN INCHES					
				A	B	C	H	T	X
3	WTPO300-4N-AA	2	-	3	2 1/2	3	2 11/32	5/8	5/8
3	WTPOA300-4N-45-AA	2	45°	3	2 1/2	3	-	5/8	5/8
3	WTPOA300-4N-90-AA	2	90°	3	2 1/2	3	-	5/8	5/8
3	WTPO300-4N4-AA	2	-	4	2 1/2	4	2 11/32	5/8	1 1/8
3	WTPOA300-4N4-45-AA	2	45°	4	2 1/2	4	-	5/8	1 1/8
3	WTPOA300-4N4-90-AA	2	90°	4	2 1/2	4	-	5/8	1 1/8
3 1/2	WTPO350-2N-AA	1	-	2	3	3	2 19/32	3/4	5/8
3 1/2	WTPOA350-2N-45-AA	1	45°	2	3	3	-	3/4	5/8
3 1/2	WTPOA350-2N-90-AA	1	90°	2	3	3	-	3/4	5/8
3 1/2	WTPO350-4N-AA	2	-	3	3	3	2 19/32	3/4	5/8
3 1/2	WTPOA350-4N-45-AA	2	45°	3	3	3	-	3/4	5/8
3 1/2	WTPOA350-4N-90-AA	2	90°	3	3	3	-	3/4	5/8
3 1/2	WTPO350-4N4-AA	2	-	4	3	4	2 19/32	3/4	1 1/8
3 1/2	WTPOA350-4N4-45-AA	2	45°	4	3	4	-	3/4	1 1/8
3 1/2	WTPOA350-4N4-90-AA	2	90°	4	3	4	-	3/4	1 1/8
3 1/2	WTPO350-5N4-AA	3	-	5	3	4	2 19/32	3/4	1 1/8
3 1/2	WTPOA350-5N4-45-AA	3	45°	5	3	4	-	3/4	1 1/8
3 1/2	WTPOA350-5N4-90-AA	3	90°	5	3	4	-	3/4	1 1/8
4	WTPO400-2N-AA	1	-	2	3 1/2	3	2 27/32	3/4	5/8
4	WTPOA400-2N-45-AA	1	45°	2	3 1/2	3	-	3/4	5/8
4	WTPOA400-2N-90-AA	1	90°	2	3 3/4	3	-	3/4	5/8
4	WTPO400-4N-AA	2	-	3	3 1/2	3	2 27/32	3/4	5/8
4	WTPOA400-4N-45-AA	2	45°	3	3 1/2	3	-	3/4	5/8
4	WTPOA400-4N-90-AA	2	90°	3	3 3/4	3	-	3/4	5/8
4	WTPO400-4N4-AA	2	-	4	3 1/2	4	2 27/32	3/4	1 1/8
4	WTPOA400-4N4-45-AA	2	45°	4	3 1/2	4	-	3/4	1 1/8
4	WTPOA400-4N4-90-AA	2	90°	4	3 3/4	4	-	3/4	1 1/8
5	WTPO500-2N-AA	1	-	2	3 1/2	3	3 3/8	3/4	5/8
5	WTPOA500-2N-45-AA	1	45°	2	3 1/2	3	-	3/4	5/8
5	WTPOA500-2N-90-AA	1	90°	2	3 1/2	3	-	3/4	5/8
5	WTPO500-4N-AA	2	-	3	3 1/2	3	3 3/8	3/4	5/8
5	WTPOA500-4N-90-AA	2	90°	3	3 1/2	3	-	7/8	5/8
5	WTPOA500-4N-45-AA	2	45°	3	4	3	-	7/8	5/8
5	WTPO500-4N4-AA	2	-	4	3 1/2	4	3 3/8	3/4	1 1/8
5	WTPOA500-4N4-45-AA	2	45°	4	3 1/2	4	-	3/4	1 1/8
5	WTPOA500-4N4-90-AA	2	90°	4	3 1/2	4	-	7/8	1 1/8
5	WTPO500-6N4-AA	3	-	6	3 1/2	4	3 3/8	3/4	1 1/8
5	WTPOA500-6N4-45-AA	3	45°	6	3 1/2	4	-	3/4	1 1/8
5	WTPOA500-6N4-90-AA	3	90°	6	3 1/2	4	-	3/4	1 1/8
6	WTPO600-4N4-AA	2	-	4	3 5/8	4	3 3/8	1	1 1/8
6	WTPOA600-4N4-45-AA	2	45°	4	3 5/8	4	-	1	1 1/8
6	WTPOA600-4N4-90-AA	2	90°	4	3 5/8	4	-	1	1 1/8

© 2011, AFL, all rights reserved. PP-3-00572, Revision 5, 11.16.2022
Specifications are subject to change without notice.

230 kV Aluminum Welded Terminal Connectors

DOSSERT®

TYPE WTPOC-AA

Welded Terminal Lug

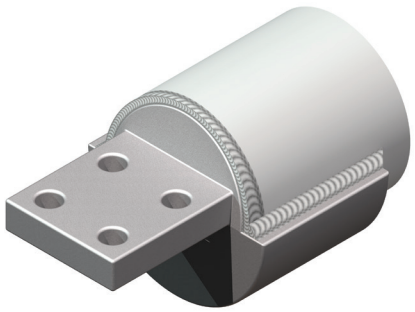

Material

Aluminum Alloy

Notes

1. Add suffix "F" to the catalog number to add contact finish to both pad surfaces.
   EX: WTPOC200-2NF-AA

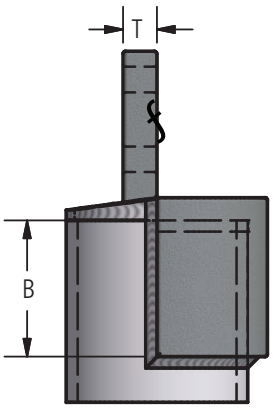

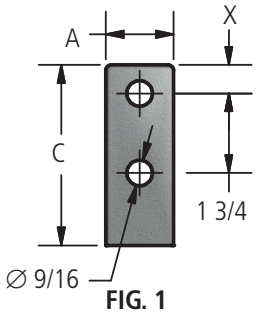

FIG. 1

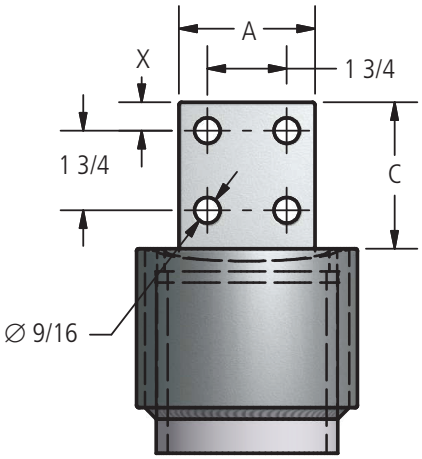

FIG. 2

Ordering Information

CATALOG NUMBER	SPS	FIG. NO.	DIMENSIONS IN INCHES				
			A	B	C	T	X
WTPOC100-2N-AA	1	1	2	1 1/8	3	3/8	5/8
WTPOC100-4N-AA	1	2	3	1 1/8	3	3/8	5/8
WTPOC125-2N-AA	1-1/4	1	2	1 3/8	3	3/8	5/8
WTPOC125-4N-AA	1-1/4	2	3	1 3/8	3	3/8	5/8
WTPOC150-2N-AA	1-1/2	1	2	1 5/8	3	1/2	5/8
WTPOC150-4N-AA	1-1/2	2	3	1 5/8	3	3/8	5/8
WTPOC150-4N4-AA	1-1/2	2	4	1 5/8	4	3/8	1 1/8
WTPOC200-2N-AA	2	1	2	1 7/8	3	1/2	5/8
WTPOC200-4N-AA	2	2	3	1 7/8	3	1/2	5/8
WTPOC200-4N4-AA	2	2	4	1 7/8	4	1/2	1 1/8
WTPOC250-2N-AA	2-1/2	1	2	2 1/4	3	1/2	5/8
WTPOC250-4N-AA	2-1/2	2	3	2 1/4	3	1/2	5/8
WTPOC250-4N4-AA	2-1/2	2	4	2 1/4	4	1/2	1 1/8
WTPOC300-2N-AA	3	1	2	2 1/2	3	5/8	5/8
WTPOC300-4N-AA	3	2	3	2 1/2	3	5/8	5/8
WTPOC300-4N4-AA	3	2	4	2 1/2	4	5/8	1 1/8
WTPOC350-2N-AA	3-1/2	1	2	3	3	3/4	5/8
WTPOC350-4N-AA	3-1/2	2	3	3	3	3/4	5/8
WTPOC350-4N4-AA	3-1/2	2	4	3	4	3/4	1 1/8
WTPOC400-2N-AA	4	1	2	3 1/2	3	3/4	5/8
WTPOC400-4N-AA	4	2	3	3 1/2	3	3/4	5/8
WTPOC400-4N4-AA	4	2	4	3 1/2	4	3/4	1 1/8
WTPOC500-4N-AA	5	2	3	3 1/2	3	7/8	5/8
WTPOC500-4N4-AA	5	2	4	3 1/2	4	3/4	1 1/8
WTPOC600-4N4-AA	6	2	4	3 1/2	4	1	1 1/8
WTPOC800R-4N4-AA	8	2	4	3 1/2	4	1	1 1/8
WTPOC800-4N4-AA	8	2	4	3 1/2	4	1	1 1/8

© 2011, AFL, all rights reserved. PP-3-00571, Revision 2, 4.24.18
Specifications are subject to change without notice.

DOSSERT®

TYPE WWSC-AA

WWSC-AA is a variable angle terminal for aluminum pipe conductor. The angle is limited based on conductor diameter.

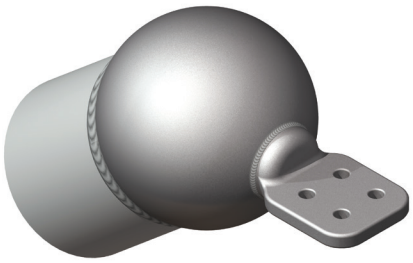

Material

Aluminum Alloy

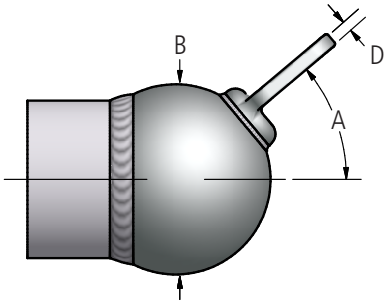

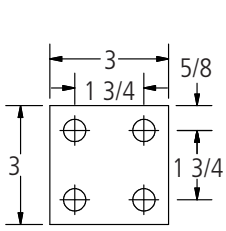

FIG. 1

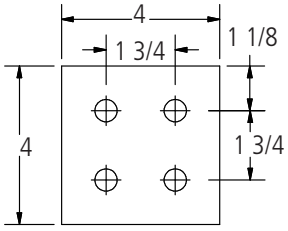

FIG. 2

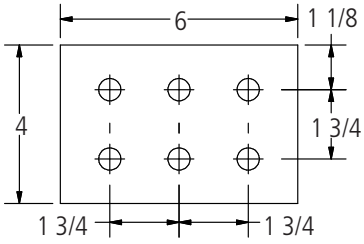

FIG. 3

Ordering Information

CATALOG NUMBER	FIG. NO.	CATALOG NUMBER	FIG. NO.	CATALOG NUMBER	FIG. NO.	SPS	DIMENSIONS IN INCHES			MAX KV
							A° (MAX)	B	D	
WWSC500-4N-AA	1	WWSC500-4N4-AA	2	WWSC500-6N4-AA	3	1 1/2	130	5	5/16	230
WWSC500-4N-AA	1	WWSC500-4N4-AA	2	WWSC500-6N4-AA	3	2	125	5	5/16	230
WWSC500-4N-AA	1	WWSC500-4N4-AA	2	WWSC500-6N4-AA	3	2 1/2	120	5	5/16	230
WWSC500-4N-AA	1	WWSC500-4N4-AA	2	WWSC500-6N4-AA	3	3	110	5	5/16	230
WWSC500-4N-AA	1	WWSC500-4N4-AA	2	WWSC500-6N4-AA	3	3 1/2	100	5	5/16	230
WWSC500-4N-AA	1	WWSC500-4N4-AA	2	WWSC500-6N4-AA	3	4	90	5	5/16	230
WWSC800-4N-AA	1	WWSC800-4N4-AA	2	WWSC800-6N4-AA	3	3	120	8	7/16	345
WWSC800-4N-AA	1	WWSC800-4N4-AA	2	WWSC800-6N4-AA	3	3 1/2	120	8	7/16	345
WWSC800-4N-AA	1	WWSC800-4N4-AA	2	WWSC800-6N4-AA	3	4	110	8	7/16	345
WWSC800-4N-AA	1	WWSC800-4N4-AA	2	WWSC800-6N4-AA	3	5	110	8	7/16	345
WWSC800-4N-AA	1	WWSC800-4N4-AA	2	WWSC800-6N4-AA	3	6	100	8	7/16	345
WWSC800-4N-AA	1	WWSC800-4N4-AA	2	WWSC800-6N4-AA	3	8 OD	65	8	7/16	345
WWSC1200-4N-AA	1	WWSC1200-4N4-AA	2	WWSC1200-6N4-AA	3	4	140	12	3/8	500
WWSC1200-4N-AA	1	WWSC1200-4N4-AA	2	WWSC1200-6N4-AA	3	5	135	12	3/8	500
WWSC1200-4N-AA	1	WWSC1200-4N4-AA	2	WWSC1200-6N4-AA	3	6	130	12	3/8	500
WWSC1200-4N-AA	1	WWSC1200-4N4-AA	2	WWSC1200-6N4-AA	3	8 OD	120	12	3/8	500

© 2010, AFL, all rights reserved. PP-3-00580, REvision 1, 9.16.13
Specifications are subject to change without notice.

230 kV Aluminum Welded Terminal Connectors

DOSSERT®

TYPE WXL-90V-AA

Expansion Terminal Connector

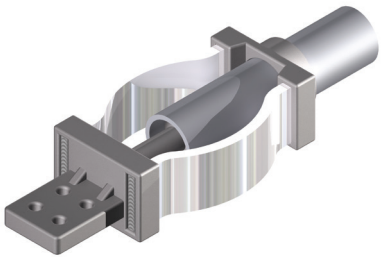

Material

Aluminum Alloy

Laminates

Pure Aluminum

Notes

- If alignment guide is not needed add "P" to the catalog number. EX: WXL200P-4N4-90V-AA

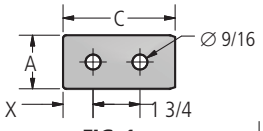

FIG. 1

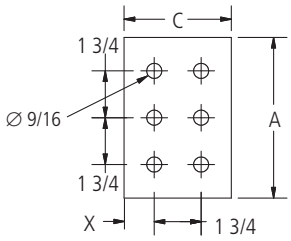

FIG. 3

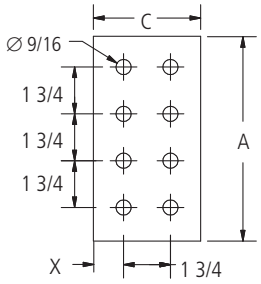

FIG. 4

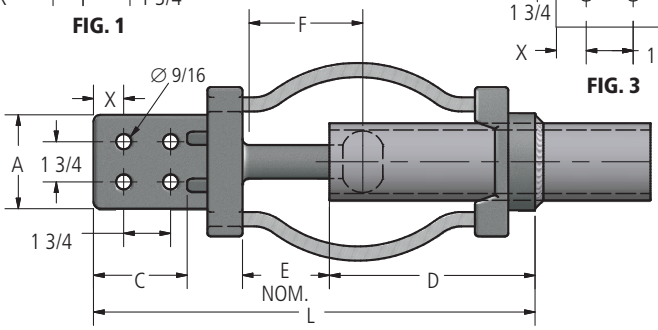

FIG. 2

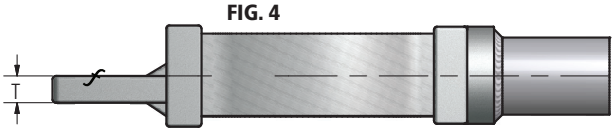

Ordering Information

CATALOG NUMBER		SPS	FIG. NO.	DIMENSIONS IN INCHES							
SCH 40	SCH 80			A	C	D	E	F	L	T	X
WXL100-2N-90V-AA	WXL100E-2N-90V-AA	1	1	1-1/2	3	5-1/8	1-1/2	3-1/4	10-5/8	1/2	5/8
WXL100-4N-90V-AA	WXL100E-4N-90V-AA	1	2	3	3	5-1/8	1-1/2	3-1/4	10-5/8	1/2	5/8
WXL100-4N4-90V-AA	WXL100E-4N4-90V-AA	1	2	4	4	5-1/8	1-1/2	3-1/4	12-1/8	1/2	1-1/8
WXL125-2N-90V-AA	WXL125E-2N-90V-AA	1 1/4	1	2 1/4	3	6	1-1/2	3-1/2	11-1/2	1/2	5/8
WXL125-4N-90V-AA	WXL125E-4N-90V-AA	1 1/4	2	3	3	6	1-1/2	3-1/2	11-1/2	1/2	5/8
WXL150-2N-90V-AA	WXL150E-2N-90V-AA	1-1/2	1	2-1/2	3	7-1/8	1-1/2	3-1/2	12-3/4	5/8	5/8
WXL150-4N-90V-AA	WXL150E-4N-90V-AA	1-1/2	2	3	3	7-1/8	1-1/2	3-1/2	12-3/4	5/8	5/8
WXL200-2N-90V-AA	WXL200E-2N-90V-AA	2	1	3	3	7-3/16	2-1/2	4-1/2	14-3/8	3/4	5/8
WXL200-4N-90V-AA	WXL200E-4N-90V-AA	2	2	3	3	7-3/16	2-1/2	4-1/2	14-3/8	3/4	5/8
WXL200-4N4-90V-AA	WXL200E-4N4-90V-AA	2	2	4	4	7-3/16	2-1/2	4-1/2	15-3/8	3/4	1-1/8
WXL250-2N-90V-AA	WXL250E-2N-90V-AA	2-1/2	1	3	3	7-11/16	2-1/2	4-1/2	14-7/8	3/4	5/8
WXL250-4N-90V-AA	WXL250E-4N-90V-AA	2-1/2	2	3	3	7-11/16	2-1/2	4-1/2	14-7/8	3/4	5/8
WXL250-4N4-90V-AA	WXL250E-4N4-90V-AA	2-1/2	2	4	4	7-11/16	2-1/2	4-1/2	15-7/8	3/4	1-1/8
WXL300-2N-90V-AA	WXL300E-2N-90V-AA	3	1	3	3	8-3/16	2-1/2	4-1/2	16	7/8	5/8
WXL300-4N-90V-AA	WXL300E-4N-90V-AA	3	2	3	3	8-3/16	2-1/2	4-1/2	16	7/8	5/8
WXL300-4N4-90V-AA	WXL300E-4N4-90V-AA	3	2	4	4	8-3/16	2-1/2	4-1/2	17	7/8	1-1/8

continued

© 2011, AFL, all rights reserved. PP-3-00584, Revision 6, 2.1.2023
Specifications are subject to change without notice.

DOSSERT®

TYPE WXL-90V-AA

Expansion Terminal Connector

Ordering Information (cont.)

CATALOG NUMBER		SPS	FIG. NO.	DIMENSIONS IN INCHES							
SCH 40	SCH 80			A	C	D	E	F	L	T	X
WXL350-2N-90V-AA	WXL350E-2N-90V-AA	3-1/2	1	3	3	9-3/4	2-1/2	4-1/2	17-5/16	7/8	5/8
WXL350-4N-90V-AA	WXL350E-4N-90V-AA	3-1/2	2	3	3	9-3/4	2-1/2	4-1/2	17-5/16	7/8	5/8
WXL350-4N4-90V-AA	WXL350E-4N4-90V-AA	3-1/2	2	4	4	9-3/4	2-1/2	4-1/2	18-5/16	7/8	1-1/8
WXL350-6N4-90V-AA	WXL350E-6N4-90V-AA	3-1/2	3	6	4	9 3/4	2 1/2	4 1/2	18 5/16	3/4	1 1/8
WXL400-2N-90V-AA	WXL400E-2N-90V-AA	4	1	3	3	10	2-1/2	4-1/2	18	1	5/8
WXL400-4N-90V-AA	WXL400E-4N-90V-AA	4	2	3	3	10	2-1/2	4-1/2	18	1	5/8
WXL400-4N4-90V-AA	WXL400E-4N4-90V-AA	4	2	4	4	10	2-1/2	4-1/2	19	1	1-1/8
WXL400-6N4-90V-AA	WXL400E-6N4-90V-AA	4	3	6	4-1/2	10	2-1/2	4-1/2	16-1/2	3/4	1-1/8
WXL500-4N-90V-AA	WXL500E-4N-90V-AA	5	2	3	3	10	2-1/2	4-1/2	18	1-1/4	5/8
WXL500-4N4-90V-AA	WXL500E-4N4-90V-AA	5	2	4	4	10	2-1/2	4-1/2	19	1-1/4	1-1/8
WXL500-6N4-90V-AA	WXL500E-6N4-90V-AA	5	3	6	4	10	2-1/2	4-1/2	19	1-1/4	1-1/8
WXL600-4N-90V-AA	WXL600E-4N-90V-AA	6	2	3	3	12	2-1/2	4-1/2	20-3/8	1-3/8	5/8
WXL600-4N4-90V-AA	WXL600E-4N4-90V-AA	6	2	4	4	12	2-1/2	4-1/2	21-3/8	1-3/8	1-1/8
WXL600-6N4-90V-AA	WXL600E-6N4-90V-AA	6	3	6	4	12	2-1/2	4-1/2	21-3/8	1	1-1/8
WXL600-8N4-90V-AA	WXL600E-8N4-90V-AA	6	4	8	4	12	2 1/2	4 1/2	21 3/8	1	1 1/8

© 2011, AFL, all rights reserved. PP-3-00584, Revision 6, 2.1.2023
Specifications are subject to change without notice.

DOSSERT®

TYPE WXL-AA, WXL-E-AA

Expansion Terminal Connector

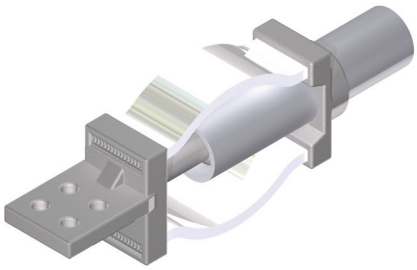

Material

Aluminum Alloy

Notes

- Add "P" to suffix of WXL for no alignment guide. EX: WXLP200-4N-AA
- Add "F" to suffix of pad type for contact finish on both sides of the pad. EX: WXL200-4NF-AA

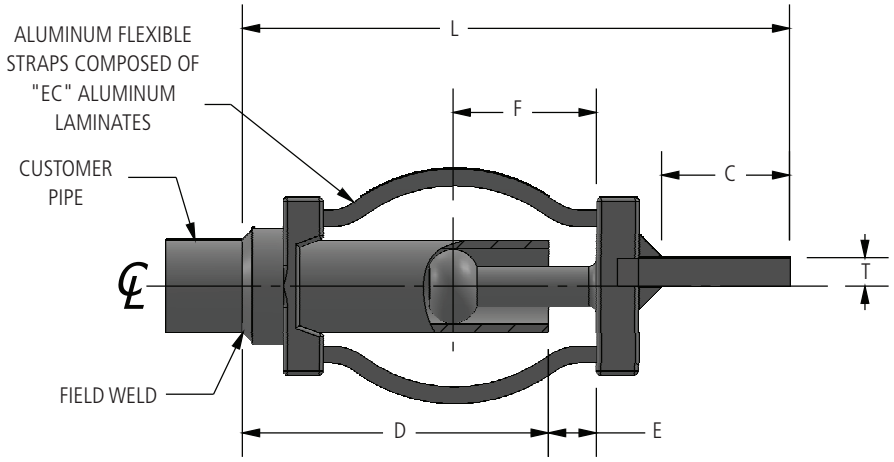

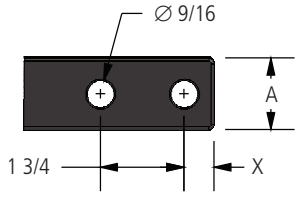

FIG. 1

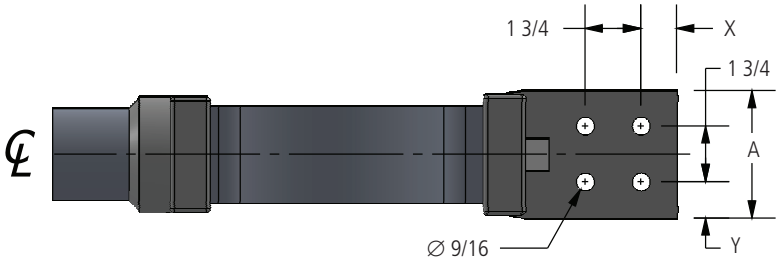

FIG. 2

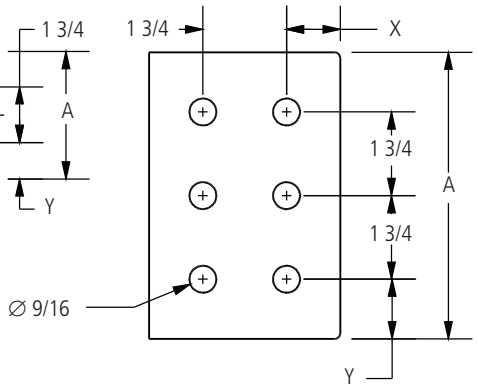

FIG. 3

© 2011, AFL, all rights reserved. PP-3-00585, Revision 4, 10.17.2022
Specifications are subject to change without notice.

DOSSERT®

TYPE WXL-AA, WXL-E-AA

Expansion Terminal Connector

Ordering Information

CATALOG NUMBER		SPS	FIG. NO.	DIMENSIONS IN INCHES								
SCH 40	SCH 80			A	C	D	E	F	L	T	Y	X
WXL100-2N-AA	WXL100E-2N-AA	1	1	1-3/4	3	5-1/8	1-1/2	3-1/2	10-5/8	1/2	NA	5/8
WXL100-4N-AA	WXL100E-4N-AA	1	2	3	3	5-1/8	1-1/2	3-1/2	10-5/8	1/2	5/8	5/8
WXL125-2N-AA	WXL125E-2N-AA	1-1/4	1	2-1/4	3	6	1-1/2	3-1/2	11-1/2	1/2	NA	5/8
WXL125-4N-AA	WXL125E-4N-AA	1-1/4	2	3	3	6	1-1/2	3-1/2	11-1/2	1/2	5/8	5/8
WXL125-4N4-AA	WXL125E-4N4-AA	1-1/4	2	4	4	6	1-1/2	3-1/2	11-1/2	1/2	1-1/8	1-1/8
WXL150-2N-AA	WXL150E-2N-AA	1-1/2	1	2-1/2	3	7-1/8	1-1/2	3-1/2	12-3/4	5/8	5/8	5/8
WXL150-4N-AA	WXL150E-4N-AA	1-1/2	2	3	3	7-1/8	1-1/2	3-1/2	12-3/4	5/8	5/8	5/8
WXL150-4N4-AA	WXL150E-4N4-AA	1-1/2	2	3	3	7-1/8	1-1/2	3-1/2	12-3/4	5/8	5/8	5/8
WXL200-2N-AA	WXL200E-2N-AA	2	1	3	3	7-3/16	2-1/2	4-1/2	14-3/8	3/4	NA	5/8
WXL200-4N-AA	WXL200E-4N-AA	2	2	3	3	7-3/16	2-1/2	4-1/2	14-3/8	3/4	5/8	5/8
WXL200-4N4-AA	WXL200E-4N4-AA	2	2	4	4	7-3/16	2-1/2	4-1/2	14-3/8	3/4	1-1/8	1-1/8
WXL200-6N4-AA	WXL200E-6N4-AA	2	3	6	4	7-3/16	2-1/2	4-1/2	14-3/8	3/4	1-1/4	1-1/8
WXL250-2N-AA	WXL250E-2N-AA	2-1/2	1	3	3	7-11/16	2-1/2	4-1/2	14-7/8	3/4	NA	5/8
WXL250-4N-AA	WXL250E-4N-AA	2-1/2	2	3	3	7-11/16	2-1/2	4-1/2	14-7/8	3/4	5/8	5/8
WXL250-4N4-AA	WXL250E-4N4-AA	2-1/2	2	4	4	7-11/16	2-1/2	4-1/2	15-7/8	3/4	1-1/8	1-1/8
WXL300-2N-AA	WXL300E-2N-AA	3	1	3	3	8-3/16	2-1/2	4-1/2	16	7/8	NA	5/8
WXL300-4N-AA	WXL300E-4N-AA	3	2	3	3	8-3/16	2-1/2	4-1/2	16	7/8	5/8	5/8
WXL300-4N4-AA	WXL300E-4N4-AA	3	2	4	4	8-3/16	2-1/2	4-1/2	17	7/8	1-1/8	1-1/8
WXL300-6N4-AA	WXL300E-6N4-AA	3	3	6	4	8-3/16	2-1/2	4-1/2	17	7/8	1-1/8	1-1/8
WXL350-2N-AA	WXL350E-2N-AA	3-1/2	1	3	3	9-3/4	2-1/2	4-1/2	17-5/16	7/8	NA	5/8
WXL350-4N-AA	WXL350E-4N-AA	3-1/2	2	3	4-1/4	9-3/4	2-1/2	4-1/2	18-9/16	13/16	5/8	5/8
WXL350-4N4-AA	WXL350E-4N4-AA	3-1/2	2	4	4	9-3/4	2-1/2	4-1/2	18-5/16	7/8	1-1/8	1-1/8
WXL400-2N-AA	WXL400E-2N-AA	4	1	3	3	10	2-1/2	4-1/2	18	1	NA	5/8
WXL400-4N-AA	WXL400E-4N-AA	4	2	3	3	10	2-1/2	4-1/2	18	1	5/8	5/8
WXL400-4N4-AA	WXL400E-4N4-AA	4	2	4	4	10	2-1/2	4-1/2	19	1	1-1/8	1-1/8
WXL400-6N4-AA	WXL400E-6N4-AA	4	3	6	4	10	2-1/2	5-9/16	19-1/4	1	1-1/4	1-1/8
WXL500-4N-AA	WXL500E-4N-AA	5	2	3	3	10	2-1/2	4-1/2	18	1-1/4	5/8	5/8
WXL500-4N4-AA	WXL500E-4N4-AA	5	2	4	4	10	2-1/2	4-1/2	19	1-1/4	1-1/8	1-1/8
WXL500-6N4-AA	WXL500E-6N4-AA	5	3	6	4	10	2-1/2	5-5/8	19	1	1-1/4	1-1/8
WXL600-4N-AA	WXL600E-4N-AA	6	2	3	3	12	2-1/2	4-1/2	20-3/8	1-3/8	5/8	5/8
WXL600-4N4-AA	WXL600E-4N4-AA	6	2	4	4	12	2-1/2	4-1/2	21-3/8	1-3/8	1-1/8	1-1/8
WXL600-6N4-AA	WXL600E-6N4-AA	6	3	6	4	12	2-1/2	4-1/2	21-3/8	1-3/8	1-1/4	1-1/8
WXL800-4N4-AA	WXL800E-4N4-AA	8	2	4	4	15	2-1/2	4-1/2	24-3/8	1-3/8	1-1/8	1-1/8
WXL800-6N4-AA	WXL800E-6N4-AA	8	3	6	4	15	2-1/2	4-1/2	24-3/8	1-3/8	1-1/4	1-1/8

© 2011, AFL, all rights reserved. PP-3-00585, Revision 4, 10.17.2022
Specifications are subject to change without notice.

230 kV Aluminum Welded Terminal Connectors

DOSSERT®

TYPE WXLO-AA, WXLO-E-AA

Expansion Terminal Connector

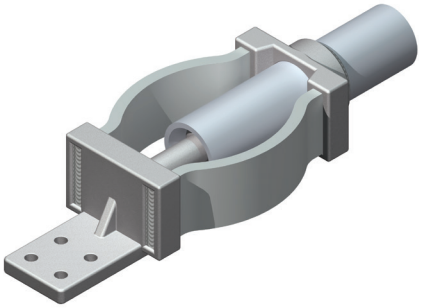

Material

Aluminum Alloy

Note

1. Add "P" to suffix of WXLO for no alignment guide. EX: WXLOP300-4N-AA
2. Add "F" to suffix of pad type for contact finish on both sides of the pad. EX: WXLO300-4NF-AA

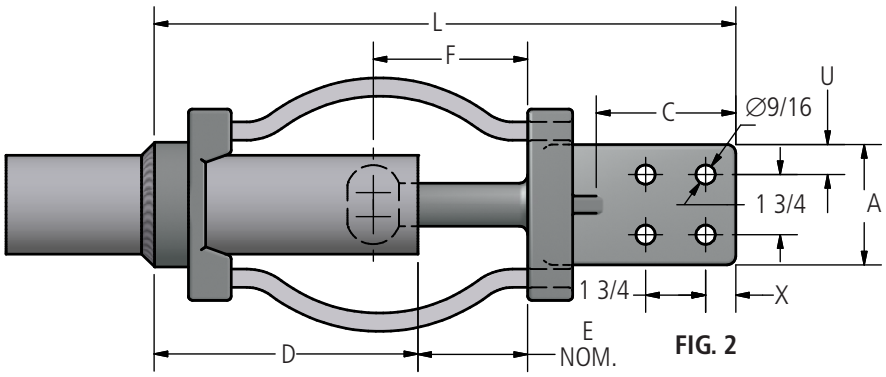

FIG. 2

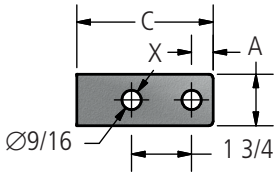

FIG. 1

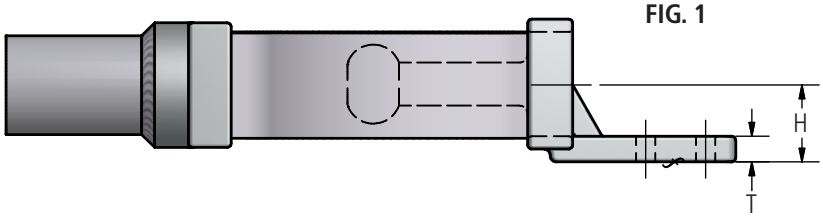

© 2011, AFL, all rights reserved. PP-3-00586, Revision 1, 9.21.2023
Specifications are subject to change without notice.

DOSSERT®

TYPE WXLO-AA, WXLO-E-AA

Ordering Information

CATALOG NUMBER		PIPE SIZE	FIG. NO.	DIMENSIONS IN INCHES									
SCH 40	SCH 80			A	C	D	E	F	H	L	T	U	X
WXLO100-2N-AA	WXLO100E-2N-AA	1	1	1 3/4	3	5 1/8	1 1/2	3 1/2	1 1/8	10 5/8	5/8	N/A	5/8
WXLO100-4N-AA	WXLO100E-4N-AA	1	2	3	3	5 1/8	1 1/2	3 1/2	1 5/16	10 5/8	1/2	5/8	5/8
WXLO125-2N-AA	WXLO125E-2N-AA	1 1/4	1	2 1/4	3	6	1 1/2	3 1/2	1 5/16	11 1/2	1/2	N/A	5/8
WXLO125-4N-AA	WXLO125E-4N-AA	1 1/4	2	3	3	6	1 1/2	3 1/2	1 5/16	11 1/2	1/2	5/8	5/8
WXLO125-4N4-AA	WXLO125E-4N4-AA	1 1/4	2	4	4	6	1 1/2	3 1/2	1 5/8	12 3/4	1/2	1 1/8	1 1/8
WXLO150-2N-AA	WXLO150E-2N-AA	1 1/2	1	2 1/2	3	7 1/8	1 1/2	3 1/2	1 5/8	12 3/4	5/8	N/A	5/8
WXLO150-4N-AA	WXLO150E-4N-AA	1 1/2	2	3	3	7 1/8	1 1/2	3 1/2	1 5/8	12 3/4	5/8	5/8	5/8
WXLO200-2N-AA	WXLO200E-2N-AA	2	1	2	3	7 3/16	2 1/2	4 1/2	2	14 3/8	3/4	N/A	5/8
WXLO200-4N-AA	WXLO200E-4N-AA	2	2	3	3	7 3/16	2 1/2	4 1/2	2	14 3/8	3/4	3/4	7/8
WXLO200-4N4-AA	WXLO200E-4N4-AA	2	2	4	4	7 3/16	2 1/2	4 1/2	2	15 3/8	3/4	1 1/8	1 1/8
WXLO250-4N-AA	WXLO250E-4N-AA	2 1/2	2	3	3	7 11/16	2 1/2	4 1/2	2 1/4	14 7/8	3/4	1 1/4	1 1/4
WXLO250-4N4-AA	WXLO250E-4N4-AA	2 1/2	2	4	4	7 11/16	2 1/2	4 1/2	2 1/4	15 7/8	3/4	1 1/8	1 1/8
WXLO300-4N-AA	WXLO300E-4N-AA	3	2	3	3	8 3/16	2 1/2	4 1/2	2 5/8	16	7/8	5/8	5/8
WXLO300-4N4-AA	WXLO300E-4N4-AA	3	2	4	4	8 3/16	2 1/2	4 1/2	2 5/8	17	7/8	1 1/8	1 1/8
WXLO350-4N-AA	WXLO350E-4N-AA	3 1/2	2	3	3	9 3/4	2 1/2	4 1/2	2 15/16	17 5/16	7/8	5/8	5/8
WXLO350-4N4-AA	WXLO350E-4N4-AA	3 1/2	2	4	4	9 3/4	2 1/2	4 1/2	2 15/16	18 5/16	7/8	1 1/8	1 1/8
WXLO400-4N-AA	WXLO400E-4N-AA	4	2	3	3	10	2 1/2	4 1/2	3 1/4	18	1	5/8	5/8
WXLO400-4N4-AA	WXLO400E-4N4-AA	4	2	4	4	10	2 1/2	4 1/2	3 1/4	19	1	1 1/8	1 1/8
WXLO500-4N-AA	WXLO500E-4N-AA	5	2	3	3	10	2 1/2	4 1/2	3 1/2	18	1 1/4	5/8	5/8
WXLO500-4N4-AA	WXLO500E-4N4-AA	5	2	4	4	10	2 1/2	4 1/2	3 1/2	19	1 1/4	1 1/8	1 1/8
WXLO600-4N-AA	WXLO600E-4N-AA	6	2	3	3	12	2 1/2	4 1/2	4 1/4	20 3/8	1 3/8	5/8	5/8
WXLO600-4N4-AA	WXLO600E-4N4-AA	6	2	4	4	12	2 1/2	4 1/2	4 1/4	21 3/8	1 3/8	1 1/8	1 1/8

© 2011, AFL, all rights reserved. PP-3-00586, Revision 1, 9.21.2023
Specifications are subject to change without notice.

230 kV Aluminum Welded Connectors

DOSSERT®

Table of Contents

230 kV Aluminum Compression

230 kV Compression Table of Contents 449
Pictorial Index 450

Compression Connectors

Type 2600, 2700 Series 451
Type 2800 Series 452
Type 2930 Series 453
Type 3400 Series 454
Type 5000 Series 455
Type 5400 Series 458
Type S5600, S5100 Series 460
Type S5600-45, S5800 Series 460
Type DP2L-V-EC 471

Pictorial Index

Aluminum Compression Connectors


2600, 2700 SERIES
PG. 451


2800 SERIES
PG. 452


2930 SERIES
PG. 453


3400 SERIES
PG. 454


5000 SERIES
PG. 455


5400 SERIES
PG. 458


S5600, S5100 SERIES
PG. 460


S5600-45, S5800 SERIES
PG. 466


DP2L-V-EC SERIES
PG. 471

Type 2700, 2600 Series

Substation straight terminals are designed for limited space applications as found in substations. Terminals are shorter than conventional terminals which saves space and allows for faster installation. Terminals are installed with standard AFL hex dies. Terminals can be supplied pre filled if required.

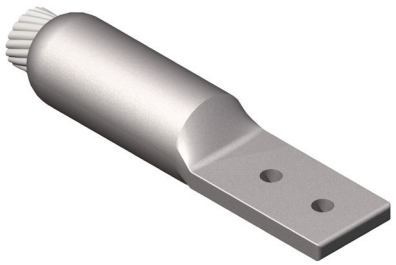

2600

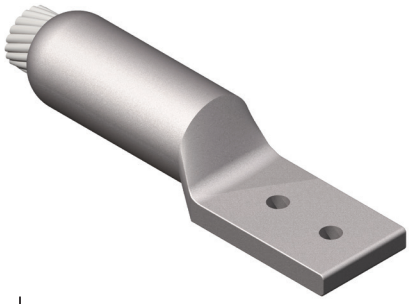

2700

Notes

Other pad sizes can be custom ordered.

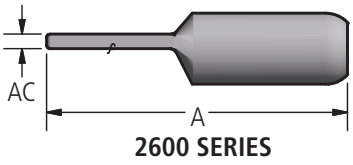

2600 SERIES

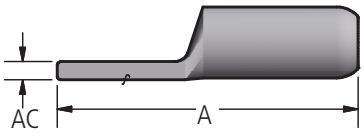

2700 SERIES

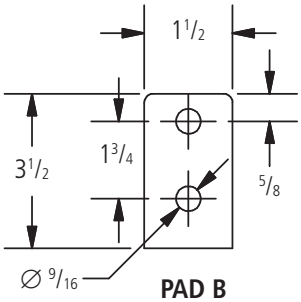

PAD B

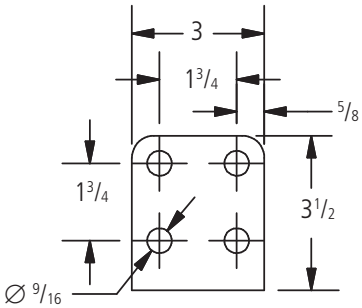

PAD D

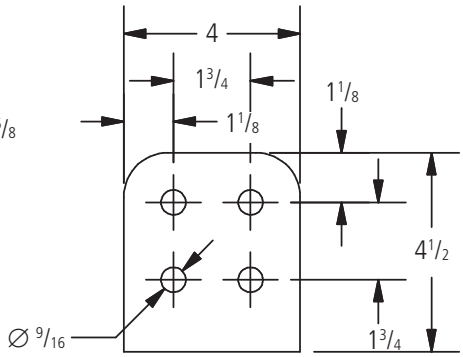

PAD E

Ordering Information

Catalog Number		Conductor Range			Pad Size	Dimensions in Inches		Die size	Nominal Weight lbs
Offset Pad	Center Formed Pad	Diameter	AAC	ACSR		A	AC		
2776.0	2676.0	.447-.593	4/0-266.8	2/0 (6/1)-4/0(6/1)	B	7.08	0.50	76AH	0.58
2776.1	2676.1	.609-.743	300-397.5	266.8(18/1)-397.5(18/1)	B	7.08	0.50	76AH	0.58
2720.1	2620.1	.629-.724	336.4 - 397.5	266.8(6/7) - 336.4(30/7)	B	6.87	0.50	20AH	0.52
2720.2	2620.2	.721-.814	397.5-500	336.4(30/7)-477(18/1)	B	6.87	0.50	20AH	0.52
2724.1	2624.1	.793-.926	477-636	397.5(30/7) - 556.5(24/7)	B	7.21	0.50	24AH	0.69
2724.1D	–	.793-.926	477-636	397.5(30/7) - 556.5(24/7)	D	7.21	0.62	24AH	0.69
2727.1	2627.1	.929-1.025	700 - 750	556.5(30/7)-666.6(24/7)	D	7.49	0.62	27AH	1.2
2727.1B	–	.929-1.025	700 - 750	556.5(30/7)-666.6(24/7)	B	7.49	0.50	27AH	1.2
2730.1	2630.1	1.026 - 1.196	795 - 1033.5	715.5(24/7) - 954(54/7)	D	8.84	0.62	30AH	1.6
2730.1B	–	1.026 - 1.196	795 - 1033.5	715.5(24/7) - 954(54/7)	B	8.84	0.50	30AH	1.6
2734.1	2634.1	1.186 - 1.313	954-1272	954(54.7)-1192.5(45/7)	D	9.19	0.62	34AH	1.9
2734.1E	–	1.186 - 1.313	954-1272	954(54.7)-1192.5(45/7)	E	9.81	0.75	34AH	1.9
2736.1	2636.1	1.314 - 1.399	1300-1431	1192.5(54/19) - 1351.5(45/7)	D	9.45	0.62	36AH	2.1
2738.1	2638.1	1.399 - 1.500	1351.5-1590	1351.5(45/7) - 1510.5(45/7)	D	9.69	0.62	38AH	2.3
2738.1E	–	1.399 - 1.500	1351.5-1590	1351.5(45/7) - 1510.5(45/7)	E	9.69	0.75	38AH	2.3
2740.1	2640.1	1.501 - 1.630	1750 - 2000	1510.5(54/19) - 1780(84/19)	D	10.14	0.62	40AH	2.6
2742.1	2642.1	1.630 - 1.681	2000	2034(72/7)	E	11.11	0.75	42AH	3.5
2744.1	2644.1	1.630 - 1.681	2000	2034(72/7)	E	11.61	0.75	44AH	4.0
2744.2	2644.2	1.669 - 1.823	2250 - 2500	2034(72/7) - 2312(76/19)	E	11.61	0.75	44AH	4.0
2748.1	2648.1	1.823 - 1.996	2500 - 2750	2515(76/19)	E	12.64	0.75	48AH	4.6
2748.2	2648.2	1.996 - 2.158	3000-3500	-	E	12.64	0.75	48AH	4.0

© 2010, AFL, all rights reserved. PP-3-00166, Revision 5, 11.21.2024
Specifications are subject to change without notice.

Type 2800 Series

Substation tee connector is designed for limited space application as found in substations. Run length is shorter than conventional tee taps which saves space and allows faster installation. Tee tap is installed with standard AFL hex dies.

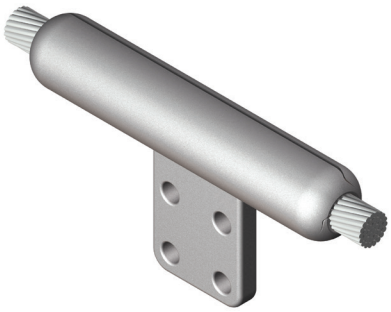

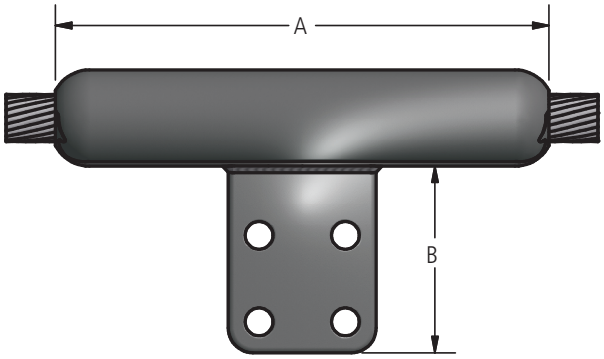

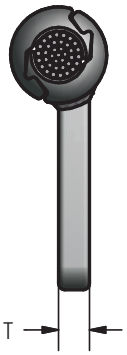

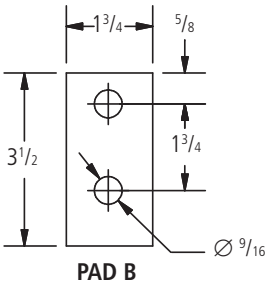

PAD B

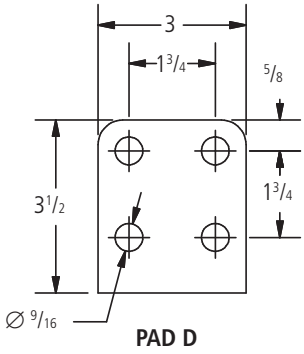

PAD D

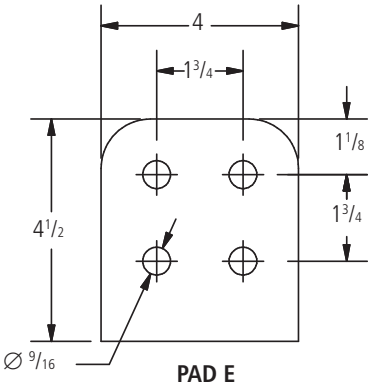

PAD E

Ordering Information

Catalog Number	Conductor Range			Pad Size	Die Size	Alternate Catalog Number	Alternate Pad Size	Dimensions (inches)		Nominal Weight (lbs)
	Diameter Range (inches)	AAC	ACSR					A	T	
		MCM								
2876.1	.609 - .743	300 - 397.5	266.8(18/1) - 336.4(30/7)	B	76AH	2876.1D	D	8.5	0.5	0.73
2820.1	.718 - .840	397.5 - 500	336.4(26/7) - 477(18/1)	B	20AH	2820.1D	D	8.5	0.5	0.91
2824.1	.780 - .933	477 - 650	397.5(26/7) - 556.5(26/7)	B	24AH	2824.1D	D	8.5	0.5	1.2
2827.1	.932 - 1.020	700 - 750	556.5(30/7) - 666.6(24/7)	D	27AH	2827.1B	B	10	0.62	2.1
2830.1	1.021 - 1.196	795 - 1033.5	715.5(24/7) - 954(54/7)	D	30AH	2830.1B	B	10	0.62	2.6
2834.1	1.140 - 1.319	1000 - 1300	795(30/19) - 1192.5(45/7)	D	34AH	2834.1E	E	11.5	0.62	3.4
2836.1	1.320 - 1.417	1351.5 - 1510.5	1192.5(54/19) - 1351.5(45/7)	D	36AH	2836.1E	E	11.5	0.62	3.7
2838.1	1.412 - 1.500	1500 - 1590	1351.5(54/19) - 1510.5(45/7)	D	38AH	2838.1E	E	12	0.62	4.3
2840.1	1.496 - 1.557	1750	1510.5(54/19) - 1590(54/19)	D	40AH	2840.1E	E	12.5	0.62	4.8
2842.1	1.550 - 1.625	-	1780(84/19)	E	42AH	2842.1D	D	14	0.75	6.4
2844.1	1.626 - 1.842	2000 - 2500	2034(72/7) - 2312(76/19)	E	44AH	2844.1D	D	14	0.75	6.3
2848.1	1.843 - 1.996	2750	2515(76/19)	E	48AH	2848.1D	D	16	0.75	7.1

© 2010, AFL, all rights reserved. PP-3-00168, Revision 4, 11.21.2024
Specifications are subject to change without notice.

Type 2900 Series

Substation tee connector is designed for limited space application as found in substations. Run and tap lengths are shorter than conventional tee connectors which saves space and minimizes birdcaging problems. Tee connector is installed with standard AFL hex dies.



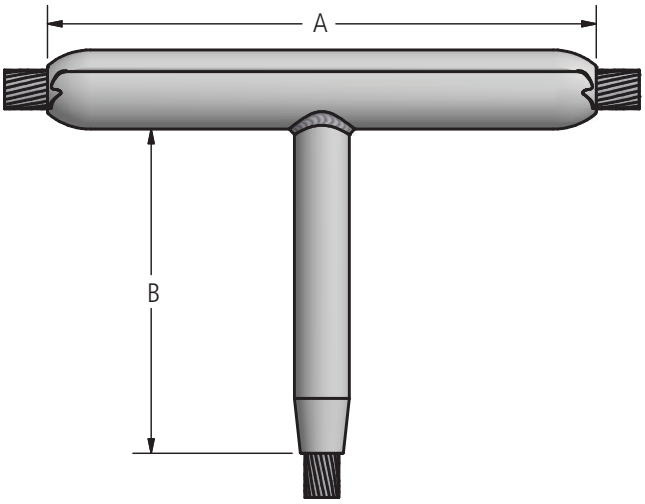

Ordering Information

Catalog Number	Conductor Diameter Range								Dimensins (inches)	
	Run				Tap				A	B
	Diameter	AAC	ACSR	Die Size	Diameter	AAC	ACSR	Die Size		
2976.1-76.1	0.609-0.743	300 - 397.5	266.8 (18/1) - 397.5 (18/1)	76AH	0.609-0.743	300 - 397.5	266.8 (18/1) - 397.5 (18/1)	76AH	8.40	3.58
2920.1-20.1	0.718-0.840	397.5 - 500	336.4 (26/7) - 477 (18/1)	20AH	0.629-0.724	300 - 397.5	266.8 (6/7) - 336.4 (26/7)	20AH	8.50	3.88
2920.1-20.2	0.718-0.840	397.5 - 500	336.4 (26/7) - 477 (18/1)	20AH	0.721-0.814	397.5 - 500	336.4 (30/7) - 477 (18/1)	20AH	8.50	3.88
2924.1-24.1	0.780-0.933	477 - 650	397.5 (26/7) - 556.5 (26/7)	24AH	0.793-0.928	477 - 650	397.5 (30/7) - 556.5 (26/7)	24AH	8.50	4.22
2927.1-27.1	0.932-1.020	700 - 750	556.5 (30/7) - 666.6 (24/7)	27AH	0.929-1.025	700 - 750	556.5 (30/7) - 666.6 (24/7)	27AH	10.00	4.50
2930.1-30.1	1.021-1.196	795 - 1033.5	715.5 (24/7) - 954 (54/7)	30AH	1.026-1.196	795 - 1033.5	715.5 (24/7) - 954 (54/7)	30AH	10.00	5.67
2934.1-34.1	1.197-1.319	1113 - 1300	1033.5 (45/7) - 1192.5 (45/7)	34AH	1.186-1.313	1113 - 1272	1033.5 (36/1) - 1192.5 (45/7)	34AH	11.30	6.03
2936.1-36.1	1.320-1.417	1351.5 - 1510.5	1192.5 (54/19) - 1351.5 (45/7)	36AH	1.314-1.399	1300 - 1431	1192.5 (54/19) - 1351.5 (45/7)	36AH	11.50	6.29
2938.1-30.1	1.412-1.500	1500 - 1590	1351.5 (54/19) - 1510.5 (45/7)	38AH	1.026-1.196	795 - 1033.5	715.5 (24/7) - 954 (54/7)	30AH	12.00	5.67
2938.1-38.1	1.412-1.500	1500 - 1590	1351.5 (54/19) - 1510.5 (45/7)	38AH	1.399-1.500	1500 - 1590	1351.5 (54/19) - 1510.5 (45/7)	38AH	12.00	6.55
2940.1-40.1	1.496-1.557	1750	1510.5 (54/19) - 1590 (54/19)	40AH	1.501-1.630	1750 - 2000	1510.5 (54/19) - 1780 (84/19)	40AH	12.50	7.02
2942.1-42.1	1.550-1.625	2000	1780 (84/19)	42AH	1.630-1.681	2000	2034 (72/7)	42AH	14.00	7.29
2944.1-44.1	1.626-1.843	2000 - 2500	2034 (72/7) - 2312 (76/19)	44AH	1.630-1.681	2000	2034 (72/7)	44AH	15.00	7.74
2944.1-44.2	1.626-1.842	2000 - 2500	2034 (72/7) - 2312 (76/19)	44AH	1.669-1.823	2250 - 2500	2034 (72/7) - 2312 (76/19)	44AH	15.00	7.74
2948.1-48.1	1.843-1.996	2750	2515 (76/19)	48AH	1.823-1.996	2500 - 2750	2515 (76/19)	48AH	16.00	8.77

© 2010, AFL, all rights reserved. PP-3-00171, Revision 2, 11.21.2024
Specifications are subject to change without notice.

Type 3400 Series

Substation 90° terminals are designed for limited space applications as found in substations. Terminals are shorter that conventional terminals which saves space and allows for faster installation. Terminals are installed with standard AFL hex dies. Terminals can be supplied pre-filled if required. Alternate pad sizes available.



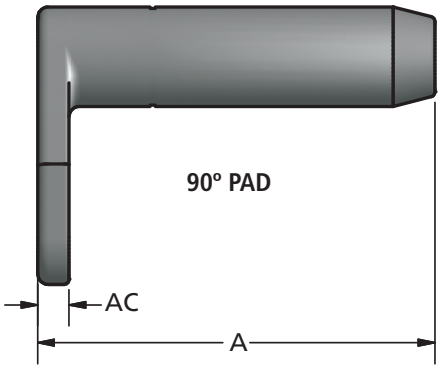

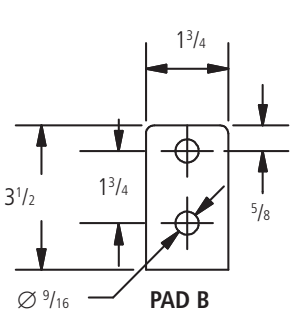

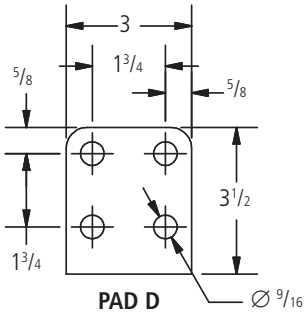

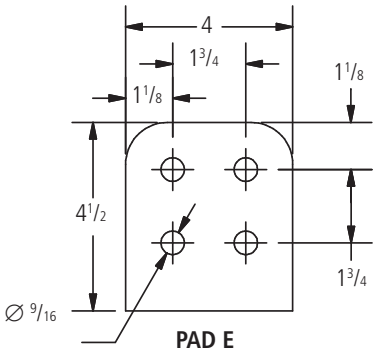

Ordering Information

Catalog Number	Conductor Range			Pad Size	Dimensions (inches)		Die Size	Nominal Weight (lbs)
	Diameter	AAC	ACSR		A	AC		
3420.1	0.629 - 0.724	336.4 - 397.5	266.8 (6/7) - 336.4 (30/7)	B	4.61	0.5	20AH	—
3420.2	0.721 - 0.814	397.5 - 500	336.4 (30/7) - 477 (18/1)	B	4.86	0.5	20AH	—
3424.1	0.793 - 0.928	477 - 636	397.5 (30/7) - 556.5 (24/7)	B	4.86	0.5	24AH	—
3427.1	0.929 - 1.025	700 - 750	556.5 (30/7) - 666.6 (24/7)	D	6.36	0.5	27AH	—
3430.1	1.026 - 1.196	795 - 1033.5	715.5 (24/7) - 954 (54/7)	D	6.03	0.62	30AH	1.3
3434.1	1.186 - 1.313	954 - 1272	954 (54/7) - 1192.5 (45/7)	D	6.44	0.62	34AH	1.6
3436.1	1.314 - 1.399	1300 - 1431	1192.5 (54/19) - 1351.5 (45/7)	D	6.72	0.62	36AH	1.7
3438.1	1.399 - 1.500	1351.5 - 1590	1351.5 (45/7) - 1510.5 (45/7)	D	6.94	0.62	38AH	2.0
3440.1	1.501 - 1.630	1750 - 2000	1510.5 (54/19) - 1780 (84/19)	D	7.38	0.62	40AH	2.2
3442.1	1.630 - 1.681	2000	2034 (72/7)	E	7.81	0.75	42AH	3.0
3444.1	1.630 - 1.681	2000	2034 (72/7)	E	8.22	0.75	44AH	3.4
3444.2	1.669 - 1.823	2250 - 2500	2034 (72/7) - 2312 (76/19)	E	8.22	0.75	44AH	3.3
3448.1	1.823 - 1.996	2500 - 2750	2515 (76/19)	E	9.22	0.75	48AH	4.5
3448.2	1.996 - 2.158	3000 - 3500	—	E	9.22	0.75	48AH	4.0

© 2010, AFL, all rights reserved. PP-3-00176, Revision 3, 11.21.2024
Specifications are subject to change without notice.

Type 5000 Series

The 5000 Series Jumper Connector is designed for AAC conductors. The jumper connector is fabricated from AFL seamless drawn aluminum. All jumper connectors are designed for limited tension use, maintaining a minimum of 40% of the ASTM rated strength of the conductor on which it is being used.



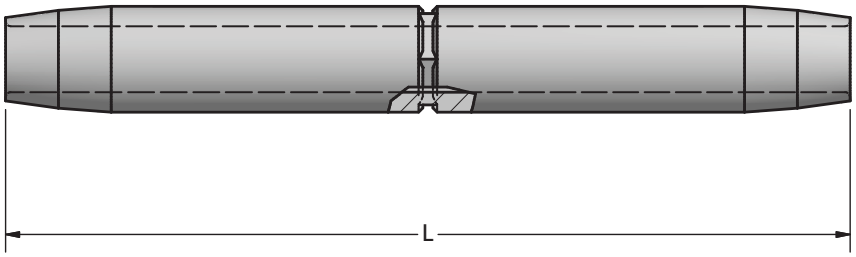

Ordering Information

Catalog Number	Conductor					Die Size Aluminum Hex Die	Dimensions in inches
	ACSR or AAC	Code Word	Size KCMil	Stranding Al/St	Diameter in inches		L
5073.391	AAC	Poppy	1/0	7	0.368	73AH	6.00
5074.438	ACSR	Raven	1/0	6/1	0.398	74AHA	7.00
5074.438	AAC	Aster	2/0	7	0.414	74AHA	7.00
5074.484	ACSR	Quail	2/0	6/1	0.447	74AH	7.00
5074.484	ACSR	Phlox	3/0	7	0.464	74AH	7.00
5075.547	ACSR	Pigeon	3/0	6/1	0.502	75AH	8.00
5075.547	AAC	Oxlip	4/0	7	0.522	75AH	8.00
5075.609	ACSR	Penguin	4/0	6/1	0.563	75AH	8.00
5075.609	AAC	Valerian	250	19	0.575	75AH	8.00
5075.609	AAC	Laurel	266.8	19	0.593	75AH	8.00
5076.650	ACSR	Waxwing	266.8	18/1	0.609	76AH	9.00
5076.650	AAC	Peony	300	19	0.629	76AH	9.00
5076.688	ACSR	Owl	266.8	6/7	0.633	76AH	9.00
5076.688	ACSR	Partridge	266.8	26/7	0.642	76AH	9.00
5076.688	AAC	Tulip	336.4	19	0.666	76AH	9.00
5076.719	ACSR	Ostrich	300	26/7	0.680	76AH	9.00
5076.719	ACSR	Merlin	336.4	18/1	0.684	76AH	9.00
5076.750	AAC	Canna	397.5	19	0.724	76AH	9.00
5076.781	ACSR	Linnet	336.4	26/7	0.720	76AH	9.00
5076.781	ACSR	Chickadee	397.5	18/1	0.743	76AH	9.00
5020.719	AAC	Daffodil	350	19	0.679	20AH	10.00
5020.781	ACSR	Linnet	336.4	26/7	0.720	20AH	10.00
5020.781	ACSR	Oriole	336.4	30/7	0.741	20AH	10.00
5020.781	ACSR	Chickadee	397.5	18/1	0.743	20AH	10.00
5020.812	ACSR	Brant	397.5	24/7	0.772	20AH	10.00
5020.812	AAC	Goldentuft	450	19	0.770	20AH	10.00
5020.812	AAC	Yarrow	450	37	0.772	20AH	10.00
5020.812	AAC	Cosmos	477	19	0.793	20AH	10.00
5020.812	AAC	Syringa	477	37	0.795	20AH	10.00

© 2010, AFL, all rights reserved. PP-3-00201, Revision 1, 11.21.2024
Specifications are subject to change without notice.

Type 5000 Series

Ordering Information

Catalog Number	Conductor					Die Size Aluminum Hex Die	Dimensions in inches
	ACSR or AAC	Code Word	Size KCMil	Stranding Al/St	Diameter in inches		L
5020.844	ACSR	Ibis	397.5	26/7	0.783	20AH	10.00
5020.844	ACSR	Lark	397.5	30/7	0.806	20AH	10.00
5024.875	ACSR	Pelican	477	18/1	0.814	24AH	11.00
5024.875	AAC	Cosmos	477	19	0.793	24AH	11.00
5024.875	AAC	Syringa	477	37	0.795	24AH	11.00
5024.875	AAC	Zinnia	500	19	0.811	24AH	11.00
5024.875	AAC	Hyacinth	500	37	0.813	24AH	11.00
5024.938	ACSR	Flicker	477	24/7	0.846	24AH	11.00
5024.938	ACSR	Hawk	477	26/7	0.858	24AH	11.00
5024.938	ACSR	Hen	477	30/7	0.883	24AH	11.00
5024.938	ACSR	Osprey	556.5	18/1	0.879	24AH	11.00
5024.938	AAC	Dahlia	556.5	19	0.856	24AH	11.00
5024.938	AAC	Mistletoe	556.5	37	0.858	24AH	11.00
5024.938	AAC	Meadowsweet	600	37	0.891	24AH	11.00
5024.969	ACSR	Parakeet	556.5	24/7	0.914	24AH	11.00
5024.969	ACSR	Dove	556.5	26/7	0.927	24AH	11.00
5024.969	AAC	Orchid	636	37	0.918	24AH	11.00
5024.969	AAC	Heuchera	650	37	0.928	24AH	11.00
5027.100	ACSR	Eagle	556.5	30/7	0.953	27AH	12.00
5027.100	ACSR	Peacock	605	24/7	0.953	24AH	12.00
5027.100	ACSR	Squab	605	26/7	0.966	24AH	12.00
5027.100	ACSR	Swift	636	36/1	0.930	24AH	12.00
5027.100	ACSR	Kingbird	636	18/1	0.940	24AH	12.00
5027.100	AAC	Flag	700	61	0.964	24AH	12.00
5027.106	ACSR	Teal	605	30/19	0.994	27AH	12.00
5027.106	ACSR	Rook	636	24/7	0.977	27AH	12.00
5027.106	ACSR	Grosbeak	636	26/7	0.990	27AH	12.00
5027.106	ACSR	Egret	636	30/19	1.019	27AH	12.00
5027.106	ACSR	Flamingo	666.6	24/7	1.000	27AH	12.00
5027.106	AAC	Violet	715.5	37	0.974	27AH	12.00
5027.106	AAC	Nasturtium	715.5	61	0.975	27AH	12.00
5027.106	AAC	Petunia	750	37	0.997	27AH	12.00
5027.106	AAC	Cattail	750	61	0.998	27AH	12.00
5030.109	ACSR	Stilt	715.5	24/7	1.036	30AH	13.00
5030.109	ACSR	Starling	715.5	26/7	1.051	30AH	13.00
5030.109	ACSR	Coot	795	36/1	1.040	30AH	13.00
5030.109	AAC	Arbutus	795	37	1.026	30AH	13.00
5030.109	AAC	Lilac	795	61	1.028	30AH	13.00
5030.109	AAC	—	800	37	1.031	30AH	13.00
5030.109	AAC	Heliotrope	800	61	1.031	30AH	13.00
5030.116	ACSR	Redwing	715.5	30/19	1.081	30AH	13.00
5030.116	ACSR	Tern	795	45/7	1.063	30AH	13.00
5030.116	ACSR	Condor	795	54/7	1.093	30AH	13.00
5030.116	ACSR	Drake	795	26/7	1.108	30AH	13.00
5030.116	ACSR	Cuckoo	795	24/7	1.092	30AH	13.00
5030.116	AAC	Snapdragon	900	61	1.094	30AH	13.00
5030.122	ACSR	Mallard	795	30/19	1.140	30AH	13.00
5030.122	ACSR	Ruddy	900	45/7	1.131	30AH	13.00
5030.122	ACSR	Canary	900	54/7	1.162	30AH	13.00
5030.122	ACSR	Catbird	954	36/1	1.140	30AH	13.00
5030.122	ACSR	Rail	954	45/7	1.165	30AH	13.00
5030.122	AAC	Magnolia	954	37	1.124	30AH	13.00

© 2010, AFL, all rights reserved. PP-3-00201, Revision 1, 11.21.2024
Specifications are subject to change without notice.

Type 5000 Series

Ordering Information

Catalog Number	Conductor					Die Size Aluminum Hex Die	Dimensions in inches
	ACSR or AAC	Code Word	Size KCMil	Stranding Al/St	Diameter in inches		L
5030.122	AAC	Goldenrod	954	61	1.126	30AH	13.00
5030.122	AAC	Camellia	1000	61	1.152	30AH	13.00
5030.122	AAC	Bluebell	1033.5	37	1.170	30AH	13.00
5030.122	AAC	Larkspur	1033.5	61	1.172	30AH	13.00
5030.125	ACSR	Cardinal	954	54/7	1.196	30AH	13.00
5030.125	ACSR	Tanager	1033.5	36/1	1.186	30AH	13.00
5034.128	ACSR	Ortolan	1033.5	45/7	1.212	34AH	14.00
5034.128	AAC	Marigold	1113	61	1.216	34AH	14.00
5034.134	ACSR	Curlew	1033.5	54/7	1.244	34AH	14.00
5034.134	ACSR	Bluejay	1113	45/7	1.259	34AH	14.00
5034.134	AAC	Hawthorn	1192.5	61	1.258	34AH	14.00
5034.134	AAC	Narcissus	1272	61	1.300	34AH	14.00
5034.138	ACSR	Bunting	1192.5	45/7	1.302	34AH	14.00
5034.138	ACSR	Finch	1113	54/19	1.293	34AH	14.00
5036.144	ACSR	Bittern	1272	45/7	1.345	36AH	15.00
5036.144	ACSR	Grackle	1192.5	54/19	1.333	36AH	15.00
5036.144	AAC	Columbine	1351	61	1.340	36AH	15.00
5036.144	AAC	Carnation	1431	61	1.379	36AH	15.00
5036.147	ACSR	Pheasant	1272	54/19	1.382	36AH	15.00
5036.147	ACSR	Dipper	1351.5	45/7	1.386	36AH	15.00
5036.147	ACSR	—	1500	91	1.412	36AH	15.00
5036.147	AAC	Gladiolus	1510.5	61	1.187	36AH	15.00
5038.150	ACSR	Martin	1351.5	54/19	1.424	38AH	16.00
5038.150	ACSR	Bobolink	1431	45/7	1.427	38AH	16.00
5038.156	ACSR	Plover	1431	54/19	1.465	38AH	16.00
5038.156	ACSR	Nuthatch	1510.5	45/7	1.466	38AH	16.00
5038.156	AAC	Coreopsis	1590	61	1.250	38AH	16.00
5038.156	AAC	Dogwood	1590	91	1.454	38AH	16.00
5040.162	ACSR	Parrot	1510.5	54/19	1.506	40AH	17.00
5040.162	ACSR	Lapwing	1590	45/7	1.504	40AH	17.00
5040.162	ACSR	Falcon	1590	54/19	1.545	40AH	17.00
5040.162	AAC	Jessamine	1750	61	1.525	40AH	17.00
5042.178	ACSR	Chukar	1780	84/19	1.602	42AH	17.00
5042.178	ACSR	—	2034	72/7	1.681	42AH	17.00
5042.178	AAC	Cowslip	2000	91	1.630	42AH	17.00
5044.181	ACSR	Kiwi	2167	72/7	1.737	44AH	17.00
5044.181	AAC	Sagebrush	2250	91	1.729	44AH	17.00
5044.181	AAC	—	2300	61	1.750	44AH	17.00
5044.181	AAC	—	2300	91	1.750	44AH	17.00
5044.184	ACSR	Bluebird	2156	84/19	1.762	44AH	17.00
5044.188	ACSR	Thrasher	2312	76/19	1.802	44AH	17.00
5044.188	AAC	Lupine	2500	91	1.823	44AH	17.00
5048.197	ACSR	Joree	2515	76/19	1.880	48AH	19.00
5048.197	AAC	Bitterroot	2750	91	1.912	48AH	19.00

© 2010, AFL, all rights reserved. PP-3-00201, Revision 1, 11.21.2024
Specifications are subject to change without notice.

TYPE 5400 Series

Tee Connector-Closed Run Compression

For Stranded EC and ACSR Conductions

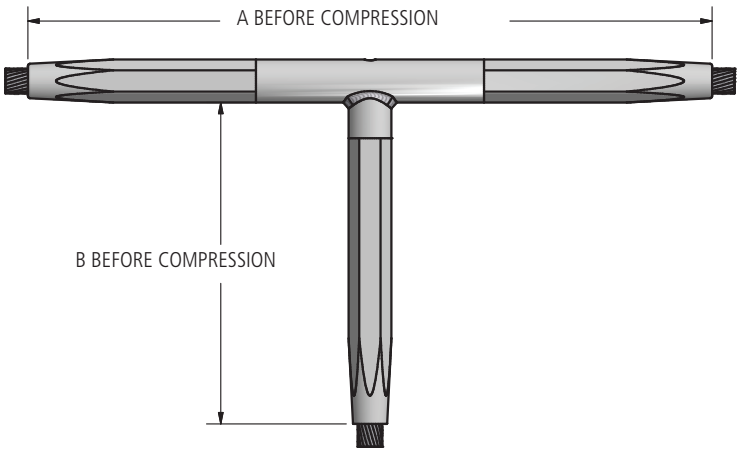



Ordering Information

Catalog Number	Conductor					Die Size Aluminum Hex Die	Dimension in Inches	
	ACSR or AAC	Code Word	Size KCMIL	Stranding Al/St	Dimension in Inches		A	B
5430.109-30.109	ACSR	Stilt	715.5	24/7	1.036	30AH	19.12	9.44
5430.109-30.109	ACSR	Starling	715.5	26/7	1.051	30AH	19.12	9.44
5430.109-30.109	ACSR	Coot	795	36/1	1.040	30AH	19.12	9.44
5430.109-30.109	AAC	Arbutus	795	37	1.026	30AH	19.12	9.44
5430.109-30.109	AAC	Lilac	795	61	1.028	30AH	19.12	9.44
5430.109-30.109	AAC	—	800	37	1.031	30AH	19.12	9.44
5430.109-30.109	AAC	Heliotrope	800	61	1.031	30AH	19.12	9.44
5430.116-30.116	ACSR	Redwing	715.5	30/19	1.081	30AH	19.12	9.44
5430.116-30.116	ACSR	Tern	795	45/7	1.063	30AH	19.12	9.44
5430.116-30.116	ACSR	Condor	795	54/7	1.093	30AH	19.12	9.44
5430.116-30.116	ACSR	Drake	795	26/7	1.108	30AH	19.12	9.44
5430.116-30.116	ACSR	Cuckoo	795	24/7	1.092	30AH	19.12	9.44
5430.116-30.116	AAC	Snapdragon	900	61	1.094	30AH	19.12	9.44
5430.122-30.122	ACSR	Mallard	795	30/19	1.140	30AH	19.12	9.44
5430.122-30.122	ACSR	Ruddy	900	45/7	1.131	30AH	19.12	9.44
5430.122-30.122	ACSR	Canary	900	54/7	1.162	30AH	19.12	9.44
5430.122-30.122	ACSR	Catbird	954	36/1	1.140	30AH	19.12	9.44
5430.122-30.122	ACSR	Rail	954	45/7	1.165	30AH	19.12	9.44
5430.122-30.122	AAC	Magnolia	954	37	1.124	30AH	19.12	9.44
5430.122-30.122	AAC	Goldenrod	954	61	1.126	30AH	19.12	9.44
5430.122-30.122	AAC	Camellia	1000	61	1.152	30AH	19.12	9.44
5430.122-30.122	AAC	Bluebell	1033.5	37	1.170	30AH	19.12	9.44
5430.122-30.122	AAC	Larkspur	1033.5	61	1.172	30AH	19.12	9.44

© 2010, AFL, all rights reserved. PP-3-00203, Revision 2, 11.21.2024
Specifications are subject to change without notice.

TYPE 5400 Series

Tee Connector-Closed Run Compression

Ordering Information

Catalog Number	Conductor					Die Size Aluminum Hex Die	Dimension in Inches	
	ACSR or AAC	Code Word	Size KCMIL	Stranding Al/St	Dimension in Inches		A	B
5430.125-30.125	ACSR	Cardinal	954	54/7	1.196	30AH	19.12	9.44
5430.125-30.125	ACSR	Tanager	1033.5	36/1	1.186	30AH	19.12	9.44
5434.128-34.128	ACSR	Ortolan	1033.5	45/7	1.212	34AH	20.12	10.06
5434.128-34.128	AAC	Marigold	1113	61	1.216	34AH	20.12	10.06
5434.138-34.138	ACSR	Bunting	1192.5	45/7	1.302	34AH	20.12	10.06
5434.138-34.138	ACSR	Finch	1113	54/19	1.293	34AH	20.12	10.06
5436.144-36.144	ACSR	Bittern	1272	45/7	1.345	36AH	21.00	10.62
5436.144-36.144	ACSR	Grackle	1192.5	54/19	1.333	36AH	21.00	10.62
5436.144-36.144	AAC	Columbine	1351	61	1.340	36AH	21.00	10.62
5436.144-36.144	AAC	Carnation	1431	61	1.379	36AH	21.00	10.62
5436.147-36.147	ACSR	Pheasant	1272	54/19	1.382	36AH	21.00	10.62
5436.147-36.147	ACSR	Dipper	1351.5	45/7	1.386	36AH	21.00	10.62
5436.147-36.147	ACSR	—	1500	91	1.412	36AH	21.00	10.62
5436.147-36.147	AAC	Gladiolus	1510.5	61	1.187	36AH	21.00	10.62
5438.156-38.156	ACSR	Plover	1431	54/19	1.465	38AH	21.88	10.62
5438.156-38.156	ACSR	Nuthatch	1510.5	45/7	1.466	38AH	21.88	10.62
5438.156-38.156	AAC	Coreopsis	1590	61	1.250	38AH	21.88	10.62
5438.156-38.156	AAC	Dogwood	1590	91	1.454	38AH	21.88	10.62
5440.162-40.162	ACSR	Parrot	1510.5	54/19	1.506	40AH	22.75	11.75
5440.162-40.162	ACSR	Lapwing	1590	45/7	1.504	40AH	22.75	11.75
5440.162-40.162	ACSR	Falcon	1590	54/19	1.545	40AH	22.75	11.75
5440.162-40.162	AAC	Jessamine	1750	61	1.525	40AH	22.75	11.75
5442.178-42.175	ACSR	Chukar	1780	84/19	1.602	42AH	23.62	12.38
5442.178-42.175	ACSR	—	2034	72/7	1.681	42AH	23.62	12.38
5442.178-42.175	AAC	Cowslip	2000	91	1.630	42AH	23.62	12.38
5444.184-44.184	ACSR	Bluebird	2156	84/19	1.762	44AH	26.75	12.00
5444.188-44.188	ACSR	Thrasher	2312	76/19	1.802	44AH	26.75	12.00
5444.188-44.188	AAC	Lupine	2500	91	1.823	44AH	26.75	12.00

© 2010, AFL, all rights reserved. PP-3-00203, Revision 2, 11.21.2024
Specifications are subject to change without notice.

S5600 Series, S5100 Series Terminal Connectors

The S5600, S5100 Series Terminal Connector is designed for ACSR and AAC conductors. The terminal is fabricated from ACA seamless drawn aluminum.



S5600



S5100

Notes

Other pads sizes can be custom ordered.

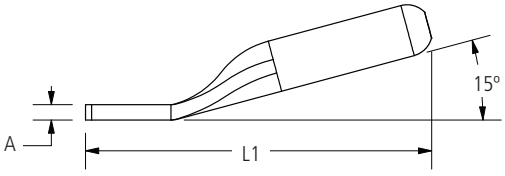

S5100

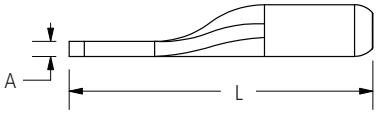

S5600

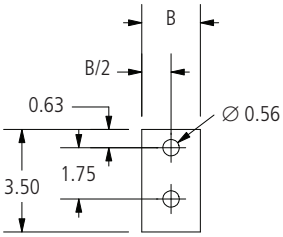

PAD B

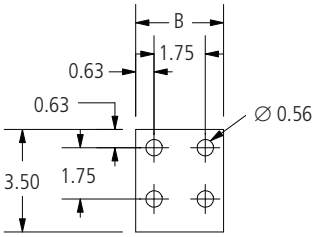

PAD D

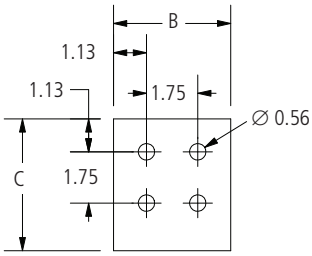

PAD E

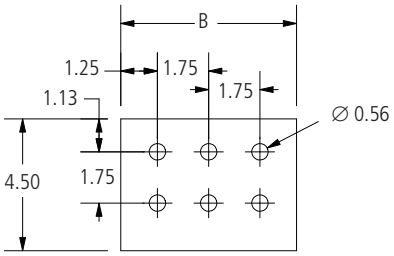

PAD G

Ordering Information

Catalog Number		Conductor					Die Size Aluminum Hex Die	Dimensions in Inches					Pad Size
Straight	15 Degree	ACSR or AAC	Code Word	Size KCMil	Stranding Al/St	Diameter in Inches		A	B	C	L	L1	
S5673.391	S5173.391	AAC	Poppy	1/0	7	0.368	73AH	0.20	1.00	—	7.44	6.44	B
S5673.391D	S5173.391D	AAC	Poppy	1/0	7	0.368	73AH	0.50	3.00	—	7.84	6.44	D
S5674.438	S5174.438	ACSR	Raven	1/0	6/1	0.398	74AH	0.30	1.00	—	7.81	7.31	B
		AAC	Aster	2/0	7	0.414							
S5674.438D	S5174.438D	ACSR	Raven	1/0	6/1	0.398	74AH	0.50	3.00	—	7.84	7.31	D
		AAC	Aster	2/0	7	0.414							
S5674.484	S5174.484	ACSR	Quail	2/0	6/1	0.447	74AH	0.30	1.00	—	7.81	7.31	B
		ACSR	Phlox	3/0	7	0.464							
S5675.547	S5175.547	ACSR	Pigeon	3/0	6/1	0.502	75AH	0.50	1.00	—	8.38	7.00	B
		AAC	Oxlip	4/0	7	0.522							
S5675.547D	S5175.547D	ACSR	Pigeon	3/0	6/1	0.502	75AH	0.50	3.00	—	8.20	6.88	D
		AAC	Oxlip	4/0	7	0.522							
S5675.609	S5175.609	ACSR	Penguin	4/0	6/1	0.563	75AH	0.50	1.00	—	8.38	7.00	B
		AAC	Valerian	250	19	0.575							
		AAC	Laurel	266.8	19	0.593							

© 2010, AFL, all rights reserved. PP-3-00435, Revision 9, 11.14.2024
Specifications are subject to change without notice.

S5600 Series, S5100 Series Terminal Connectors (cont.)

Ordering Information

Catalog Number		Conductor					Die Size Aluminum Hex Die	Dimensions in Inches					Pad Size
Straight	15 Degree	ACSR or AAC	Code Word	Size KCMil	Stranding Al/St	Diameter in Inches		A	B	C	L	L1	
S5675.609D	S5175.609D	ACSR	Penguin	4/0	6/1	0.563	75AH	0.50	3.00	—	8.18	7.00	D
		AAC	Valerian	250	19	0.575							
		AAC	Laurel	266.8	19	0.593							
S5676.656	S5176.656	ACSR	Waxwing	266.8	18/1	0.609	76AH	0.60	1.30	—	8.81	9.00	B
		AAC	Peony	300	19	0.629							
S5676.656D	S5176.656D	ACSR	Waxwing	266.8	18/1	0.609	76AH	0.50	3.00	—	7.36	9.00	D
		AAC	Peony	300	19	0.629							
S5676.688	S5176.688	ACSR	Owl	266.8	6/7	0.633	76AH	0.60	1.30	—	8.81	9.00	B
		ACSR	Partridge	266.8	26/7	0.642							
		AAC	Tulip	336.4	19	0.666							
S5676.688D	S5176.688D	ACSR	Owl	266.8	6/7	0.633	76AH	0.50	3.00	—	7.34	9.00	D
		ACSR	Partridge	266.8	26/7	0.642							
		AAC	Tulip	336.4	19	0.666							
S5620.719	S5120.719	AAC	Daffodil	350	19	0.679	20AH	0.50	1.30	—	10.50	8.50	B
S5676.719	S5176.719	ACSR	Ostrich	300	26/7	0.680	76AH	0.50	1.30	—	8.81	9.00	B
		ACSR	Merlin	336.4	18/1	0.684							
S5676.719D	S5176.719D	ACSR	Ostrich	300	26/7	0.680	76AH	0.50	3.00	—	7.33	8.76	D
		ACSR	Merlin	336.4	18/1	0.684							
S5620.781	S5120.781	ACSR	Linnet	336.4	26/7	0.720	20AH	0.50	1.30	—	10.50	8.50	B
		ACSR	Oriole	336.4	30/7	0.741							
		ACSR	Chickadee	397.5	18/1	0.743							
S5620.781D	S5120.781D	ACSR	Linnet	336.4	26/7	0.720	20AH	0.50	3.00	—	7.61	8.50	D
		ACSR	Oriole	336.4	30/7	0.741							
		ACSR	Chickadee	397.5	18/1	0.743							
S5676.781	S5176.781	ACSR	Linnet	336.4	26/7	0.720	76AH	0.50	1.30	—	8.81	9.00	B
		ACSR	Chickadee	397.5	18/1	0.743							
S5676.781D	S5176.781D	ACSR	Linnet	336.4	26/7	0.720	76AH	0.50	3.00	—	7.36	9.00	D
		ACSR	Chickadee	397.5	18/1	0.743							
S5676.750	S5176.750	AAC	Canna	397.5	19	0.724	76AH	0.50	1.30	—	8.81	9.00	B
S5676.750D	S5176.750D	AAC	Canna	397.5	19	0.724	76AH	0.50	3.00	—	8.31	9.00	D
S5620.812	S5120.812	ACSR	Brant	397.5	24/7	0.772	20AH	0.50	1.30	—	10.50	8.50	B
		AAC	Goldentuft	450	19	0.770							
		AAC	Yarrow	450	37	0.772							
		AAC	Cosmos	477	19	0.793							
		AAC	Syringa	477	37	0.795							
S5620.812D	S5120.812D	ACSR	Brant	397.5	24/7	0.772	20AH	0.50	3.00	—	8.47	8.50	D
		AAC	Goldentuft	450	19	0.770							
		AAC	Yarrow	450	37	0.772							
		AAC	Cosmos	477	19	0.793							
		AAC	Syringa	477	37	0.795							
S5620.844	S5120.844	ACSR	Ibis	397.5	26/7	0.783	20AH	0.50	1.30	—	10.50	8.50	B
		ACSR	Lark	397.5	30/7	0.806							
S5624.875	S5124.875	ACSR	Pelican	477	18/1	0.814	24AH	0.60	1.50	—	11.46	10.25	B
		AAC	Cosmos	477	19	0.793							
		AAC	Syringa	477	37	0.795							
		AAC	Zinnia	500	19	0.811							
		AAC	Hyacinth	500	37	0.813							

© 2010, AFL, all rights reserved. PP-3-00435, Revision 9, 11.14.2024
Specifications are subject to change without notice.

S5600 Series, S5100 Series Terminal Connectors (cont.)

Ordering Information

Catalog Number		Conductor					Die Size Aluminum Hex Die	Dimensions in Inches					Pad Size
Straight	15 Degree	ACSR or AAC	Code Word	Size KCMil	Stranding Al/St	Diameter in Inches		A	B	C	L	L1	
S5624.875D	S5124.875D	ACSR	Pelican	477	18/1	0.814	24AH	0.50	3.00	—	8.78	10.25	D
		AAC	Cosmos	477	19	0.793							
		AAC	Syringa	477	37	0.795							
		AAC	Zinnia	500	19	0.811							
		AAC	Hyacinth	500	37	0.813							
S5624.938	S5124.938	ACSR	Flicker	477	24/7	0.846	24AH	0.60	1.50	—	11.46	10.25	B
		ACSR	Hawk	477	26/7	0.858							
		ACSR	Hen	477	30/7	0.883							
		ACSR	Osprey	556.5	18/1	0.879							
		AAC	Dahlia	556.5	19	0.856							
		AAC	Mistletoe	556.5	37	0.858							
		AAC	Meadowsweet	600	37	0.891							
S5624.938D	S5124.938D	ACSR	Flicker	477	24/7	0.846	24AH	0.50	3.00	—	9.25	10.25	D
		ACSR	Hawk	477	26/7	0.858							
		ACSR	Hen	477	30/7	0.883							
		ACSR	Osprey	556.5	18/1	0.879							
		AAC	Dahlia	556.5	19	0.856							
		AAC	Mistletoe	556.5	37	0.858							
		AAC	Meadowsweet	600	37	0.891							
S5624.969	S5124.969	ACSR	Parakeet	556.5	24/7	0.914	24AH	0.60	1.50	—	11.46	10.25	B
		ACSR	Dove	556.5	26/7	0.927							
		AAC	Orchid	636	37	0.918							
		AAC	Heuchera	650	37	0.928							
S5624.969D	S5124.969D	ACSR	Parakeet	556.5	24/7	0.914	24AH	0.50	3.00	—	9.23	10.25	D
		ACSR	Dove	556.5	26/7	0.927							
		AAC	Orchid	636	37	0.918							
		AAC	Heuchera	650	37	0.928							
S5624.969E	S5124.969E	ACSR	Parakeet	556.5	24/7	0.914	24AH	0.50	4.00	4.00	9.83	10.25	E
		ACSR	Dove	556.5	26/7	0.927							
		AAC	Orchid	636	37	0.918							
		AAC	Heuchera	650	37	0.928							
S5627.100	S5127.100	ACSR	Eagle	556.5	30/7	0.953	27AH	0.40	3.00	—	11.72	10.82	D
		ACSR	Peacock	605	24/7	0.953							
		ACSR	Squab	605	26/7	0.966							
		ACSR	Swift	636	36/1	0.930							
		ACSR	Kingbird	636	18/1	0.940							
		AAC	Flag	700	61	0.964							
S5627.106	S5127.106	ACSR	Teal	605	30/19	0.994	27AH	0.40	3.00	—	11.72	10.82	D
		ACSR	Rook	636	24/7	0.977							
		ACSR	Grosbeak	636	26/7	0.990							
		ACSR	Egret	636	30/19	1.019							
		ACSR	Flamingo	666.6	24/7	1.000							
		AAC	Violet	715.5	37	0.974							
		AAC	Nasturtium	715.5	61	0.975							
		AAC	Petunia	750	37	0.997							
		AAC	Cattail	750	61	0.998							

© 2010, AFL, all rights reserved. PP-3-00435, Revision 9, 11.14.2024
Specifications are subject to change without notice.

S5600 Series, S5100 Series Terminal Connectors (cont.)

Ordering Information

Catalog Number		Conductor					Die Size Aluminum Hex Die	Dimensions in Inches					Pad Size
Straight	15 Degree	ACSR or AAC	Code Word	Size KCMil	Stranding Al/St	Diameter in Inches		A	B	C	L	L1	
S5627.106E	S5127.106E	ACSR	Teal	605	30/19	0.994	27AH	0.50	4.00	4.00	10.06	10.07	E
		ACSR	Rook	636	24/7	0.977							
		ACSR	Grosbeak	636	26/7	0.990							
		ACSR	Egret	636	30/19	1.019							
		ACSR	Flamingo	666.6	24/7	1.000							
		AAC	Violet	715.5	37	0.974							
		AAC	Nasturtium	715.5	61	0.975							
		AAC	Petunia	750	37	0.997							
		AAC	Cattail	750	61	0.998							
S5630.109	S5130.109	ACSR	Stilt	715.5	24/7	1.036	30AH	0.50	3.00	—	12.50	11.27	D
		ACSR	Starling	715.5	26/7	1.051							
		ACSR	Coot	795	36/1	1.040							
		AAC	Arbutus	795	37	1.026							
		AAC	Lilac	795	61	1.028							
		AAC	—	800	37	1.031							
		AAC	Heliotrope	800	61	1.031							
S5630.109E	S5130.109E	ACSR	Stilt	715.5	24/7	1.036	30AH	0.50	4.00	4.00	9.74	9.67	E
		ACSR	Starling	715.5	26/7	1.051							
		ACSR	Coot	795	36/1	1.040							
		AAC	Arbutus	795	37	1.026							
		AAC	Lilac	795	61	1.028							
		AAC	—	800	37	1.031							
		AAC	Heliotrope	800	61	1.031							
S5630.109G	S5130.109G	ACSR	Stilt	715.5	24/7	1.036	30AH	0.50	6.00	—	13.75	13.75	G
		ACSR	Starling	715.5	26/7	1.051							
		ACSR	Coot	795	36/1	1.040							
		AAC	Arbutus	795	37	1.026							
		AAC	Lilac	795	61	1.028							
		AAC	—	800	37	1.031							
		AAC	Heliotrope	800	61	1.031							
S5630.116	S5130.116	ACSR	Redwing	715.5	30/19	1.081	30AH	0.50	3.00	—	12.50	11.27	D
		ACSR	Tern	795	45/7	1.063							
		ACSR	Condor	795	54/7	1.093							
		ACSR	Drake	795	26/7	1.108							
		ACSR	Cuckoo	795	24/7	1.092							
		AAC	Snapdragon	900	61	1.094							
S5630.116B	S5130.116B	ACSR	Redwing	715.5	30/19	1.081	30AH	0.69	1.75	—	12.50	12.75	B
		ACSR	Tern	795	45/7	1.063							
		ACSR	Condor	795	54/7	1.093							
		ACSR	Drake	795	26/7	1.108							
		ACSR	Cuckoo	795	24/7	1.092							
		AAC	Snapdragon	900	61	1.094							
S5630.116E	S5130.116E	ACSR	Redwing	715.5	30/19	1.081	30AH	1.00	4.00	4.50	13.75	11.22	E
		ACSR	Tern	795	45/7	1.063							
		ACSR	Condor	795	54/7	1.093							
		ACSR	Drake	795	26/7	1.108							
		ACSR	Cuckoo	795	24/7	1.092							
		AAC	Snapdragon	900	61	1.094							

© 2010, AFL, all rights reserved. PP-3-00435, Revision 9, 11.14.2024
Specifications are subject to change without notice.

S5600 Series, S5100 Series Terminal Connectors (cont.)

Ordering Information

Catalog Number		Conductor					Die Size Aluminum Hex Die	Dimensions in Inches					Pad Size
Straight	15 Degree	ACSR or AAC	Code Word	Size KCMil	Stranding Al/St	Diameter in Inches		A	B	C	L	L1	
S5630.122	S5130.122	ACSR	Mallard	795	30/19	1.140	30AH	0.40	3.00	—	12.50	11.27	D
		ACSR	Ruddy	900	45/7	1.131							
		ACSR	Canary	900	54/7	1.162							
		ACSR	Catbird	954	36/1	1.140							
		ACSR	Rail	954	45/7	1.165							
		AAC	Magnolia	954	37	1.124							
		AAC	Goldenrod	954	61	1.126							
		AAC	Camellia	1000	61	1.152							
		AAC	Bluebell	1033.5	37	1.170							
		AAC	Larkspur	1033.5	61	1.172							
S5630.122E	—	ACSR	Mallard	795	30/19	1.140	30AH	0.50	4.00	4.00	10.05	—	E
		ACSR	Ruddy	900	45/7	1.131							
		ACSR	Canary	900	54/7	1.162							
		ACSR	Catbird	954	36/1	1.140							
		ACSR	Rail	954	45/7	1.165							
		AAC	Magnolia	954	37	1.124							
		AAC	Goldenrod	954	61	1.126							
		AAC	Camellia	1000	61	1.152							
		AAC	Bluebell	1033.5	37	1.170							
		AAC	Larkspur	1033.5	61	1.172							
—	S5130.122E	ACSR	Mallard	795	30/19	1.140	30AH	1.00	4.00	4.50	—`	11.27	E
		ACSR	Ruddy	900	45/7	1.131							
		ACSR	Canary	900	54/7	1.162							
		ACSR	Catbird	954	36/1	1.140							
		ACSR	Rail	954	45/7	1.165							
		AAC	Magnolia	954	37	1.124							
		AAC	Goldenrod	954	61	1.126							
		AAC	Camellia	1000	61	1.152							
		AAC	Bluebell	1033.5	37	1.170							
		AAC	Larkspur	1033.5	61	1.172							
S5630.125	S5130.125	ACSR	Cardinal	954	54/7	1.196	30AH	0.40	3.00	—	12.50	11.27	B
		ACSR	Tanager	1033.5	36/1	1.186							
S5630.125E	—	ACSR	Cardinal	954	54/7	1.196	30AH	0.50	4.00	4.00	10.03	—	E
		ACSR	Tanager	1033.5	36/1	1.186							
—	S5130.125E	ACSR	Cardinal	954	54/7	1.196	30AH	1.00	4.00	4.50	—	11.25	E
		ACSR	Tanager	1033.5	36/1	1.186							
S5634.128	S5134.128	ACSR	Ortolan	1033.5	45/7	1.212	34AH	0.60	3.00	—	12.20	12.44	D
		AAC	Marigold	1113	61	1.216							
S5634.134	S5134.134	ACSR	Curlew	1033.5	54/7	1.244	34AH	0.60	3.00	—	12.20	12.44	D
		ACSR	Bluejay	1113	45/7	1.259							
		AAC	Hawthorn	1192.5	61	1.258							
		AAC	Narcissus	1272	61	1.300							
S5634.134E	S5134.134E	ACSR	Curlew	1033.5	54/7	1.244	34AH	1.00	4.00	4.50	11.02	10.83	E
		ACSR	Bluejay	1113	45/7	1.259							
		AAC	Hawthorn	1192.5	61	1.258							
		AAC	Narcissus	1272	61	1.300							
S5634.138	S5134.138	ACSR	Bunting	1192.5	45/7	1.302	34AH	0.60	3.00	—	12.20	12.44	D
		ACSR	Finch	1113	54/19	1.293							

© 2010, AFL, all rights reserved. PP-3-00435, Revision 9, 11.14.2024
Specifications are subject to change without notice.

AFL | AFLglobal.com
1 (800) 890-8878

S5600 Series, S5100 Series Terminal Connectors (cont.)

Ordering Information

Catalog Number		Conductor					Die Size Aluminum Hex Die	Dimensions in Inches					Pad Size
Straight	15 Degree	ACSR or AAC	Code Word	Size KCMil	Stranding Al/St	Diameter in Inches		A	B	C	L	L1	
S5636.144	S5136.144	ACSR	Bittern	1272	45/7	1.345	36AH	0.60	3.00	—	13.76	12.50	D
		ACSR	Grackle	1192.5	54/19	1.333							
		AAC	Columbine	1351	61	1.340							
		AAC	Carnation	1431	61	1.379							
S5636.144E	S5136.144E	ACSR	Bittern	1272	45/7	1.345	36AH	1.00	4.00	4.50	10.85	10.73	E
		ACSR	Grackle	1192.5	54/19	1.333							
		AAC	Columbine	1351	61	1.340							
		AAC	Carnation	1431	61	1.379							
S5636.147	S5136.147	ACSR	Pheasant	1272	54/19	1.382	36AH	0.60	3.00	—	13.76	12.50	D
		ACSR	Dipper	1351.5	45/7	1.386							
		ACSR	—	1500	91	1.412							
		AAC	Gladiolus	1510.5	61	1.187							
S5638.150	S5138.150	ACSR	Martin	1351.5	54/19	1.424	38AH	0.80	3.00	—	13.94	13.69	D
		ACSR	Bobolink	1431	45/7	1.427							
S5638.150E	S5138.150E	ACSR	Martin	1351.5	54/19	1.424	38AH	1.00	4.00	4.50	11.44	13.69	E
		ACSR	Bobolink	1431	45/7	1.427							
S5638.156	S5138.156	ACSR	Plover	1431	54/19	1.465	38AH	0.70	3.00	—	13.94	13.69	D
		ACSR	Nuthatch	1510.5	45/7	1.466							
		AAC	Coreopsis	1590	61	1.250							
		AAC	Dogwood	1590	91	1.454							
S5638.156E	S5138.156E	ACSR	Plover	1431	54/19	1.465	38AH	1.00	4.00	4.50	11.41	14.69	E
		ACSR	Nuthatch	1510.5	45/7	1.466							
		AAC	Coreopsis	1590	61	1.250							
		AAC	Dogwood	1590	91	1.454							
S5640.162	S5140.162	ACSR	Parrot	1510.5	54/19	1.506	40AH	0.70	4.00	4.50	15.58	14.88	E
		ACSR	Lapwing	1590	45/7	1.504							
		ACSR	Falcon	1590	54/19	1.545							
		AAC	Jessamine	1750	61	1.525							
S5640.162E	S5140.162E	ACSR	Parrot	1510.5	54/19	1.506	40AH	1.00	4.00	4.50	11.83	11.92	E
		ACSR	Lapwing	1590	45/7	1.504							
		ACSR	Falcon	1590	54/19	1.545							
		AAC	Jessamine	1750	61	1.525							
S5642.178	S5142.178	ACSR	Chukar	1780	84/19	1.602	42AH	0.66	4.00	4.50	15.91	15.50	E
		ACSR	—	2034	72/7	1.681							
		AAC	Cowslip	2000	91	1.630							
S5644.181	S5144.181	ACSR	Kiwi	2167	72/7	1.737	44AH	0.70	4.00	4.50	17.84	16.00	E
		AAC	Sagebrush	2250	91	1.729							
		AAC	—	2300	61	1.750							
		AAC	—	2300	91	1.750							
S5644.184	S5144.184	ACSR	Bluebird	2156	84/19	1.762	44AH	0.70	4.00	4.50	17.84	16.00	E
S5644.188	S5144.188	ACSR	Thrasher	2312	76/19	1.802	44AH	0.72	4.00	4.50	17.84	16.00	E
		AAC	Lupine	2500	91	1.823							
S5648.197	S5148.197	ACSR	Joree	2515	76/19	1.880	48AH	0.80	4.00	4.50	18.72	17.31	E
		AAC	Bitterroot	2750	91	1.912							

© 2010, AFL, all rights reserved. PP-3-00435, Revision 9, 11.14.2024
Specifications are subject to change without notice.

S5600-45 Series, S5800 Series Terminal Connectors

The S5600-45, S5800 Series Terminal Connector is designed for ACSR and AAC conductors. The terminal is fabricated from ACA seamless drawn aluminum.

Notes

Other pads sizes can be custom ordered.



S5600-45

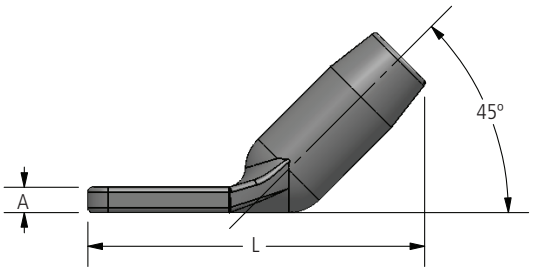

S5600-45

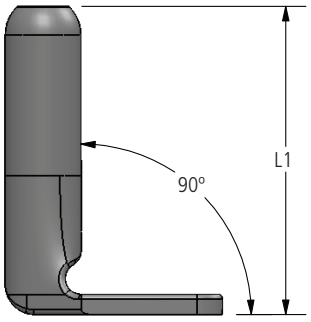

S5800



S5800

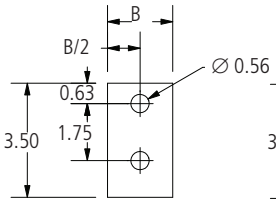

PAD B

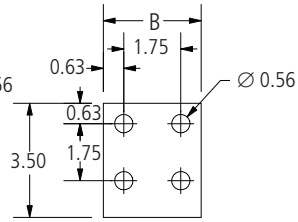

PAD D

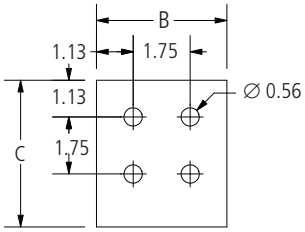

PAD E

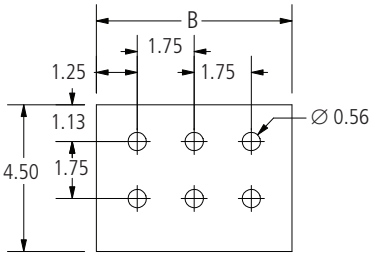

PAD G

Ordering Information

Catalog Number		Conductor					Die Size Aluminum Hex Die	Dimensions in inches					Pad Size
45 Degree	90 Degree	ACSR or AAC	Code Word	Size KCMIL	Stranding Al/St	Dimensions in inches		A	B	C	L	L1	
S5673.391-45	S5873.391	AAC	Poppy	1/0	7	0.368	73AH	0.20	1.00	—	5.04	5.04	B
S5674.438-45	S5874.438	ACSR AAC	Raven Aster	1/0 2/0	6/1 7	0.398 0.414	74AH	0.30	1.00	—	5.28	5.28	B
S5674.484-45	S5874.484	ACSR ACSR	Quail Phlox	2/0 3/0	6/1 7	0.447 0.464	74AH	0.30	1.00	—	5.28	5.28	B
S5675.547-45	S5875.547	ACSR AAC	Pigeon Oxlip	3/0 4/0	6/1 7	0.502 0.522	75AH	0.50	1.00	—	5.71	5.71	B
S5675.547D-45	S5875.547D	ACSR AAC	Pigeon Oxlip	3/0 4/0	6/1 7	0.502 0.522	75AH	0.50	3.00	—	6.89	5.71	D
S5675.609-45	S5875.609	ACSR AAC AAC	Penguin Valerian Laurel	4/0 250 266.8	6/1 19 19	0.563 0.575 0.593	75AH	0.50	1.00	—	5.71	5.71	B
—	S5875.609D	ACSR AAC AAC	Penguin Valerian Laurel	4/0 250 266.8	6/1 19 19	0.563 0.575 0.593	75AH	0.50	3.00	—	—	4.82	D
S5676.656-45	S5876.656	ACSR AAC	Waxwing Peony	266.8 300	18/1 19	0.609 0.629	76AH	0.60	1.30	—	5.35	5.35	B
S5676.688-45	S5876.688	ACSR ACSR AAC	Owl Partridge Tulip	266.8 266.8 336.4	6/7 26/7 19	0.633 0.642 0.666	76AH	0.60	1.30	—	5.35	5.35	B

© 2010, AFL, all rights reserved. PP-3-00437, Revision 10, 9.3.2024
Specifications are subject to change without notice.

S5600-45 Series, S5800 Series Terminal Connectors

Ordering Information

Catalog Number		Conductor					Die Size Aluminum Hex Die	Dimensions in inches					Pad Size
45 Degree	90 Degree	ACSR or AAC	Code Word	Size KCMIL	Stranding Al/St	Dimensions in inches		A	B	C	L	L1	
S5676.688D-45	S5876.688D	ACSR ACSR AAC	Owl Partridge Tulip	266.8 266.8 336.4	6/7 26/7 19	0.633 0.642 0.666	76AH	0.50	3.00	—	7.02	5.35	D
S5620.719-45	S5820.719	AAC	Daffodil	350	19	0.679	20AH	0.50	1.30	—	6.13	6.13	B
S5676.719-45	S5876.719	ACSR ACSR	Ostrich Merlin	300 336.4	26/7 18/1	0.680 0.684	76AH	0.50	1.30	—	5.35	5.35	B
S5620.781-45	S5820.781	ACSR ACSR ACSR	Linnet Oriole Chickadee	336.4 336.4 397.5	26/7 30/7 18/1	0.720 0.741 0.743	20AH	0.50	1.30	—	6.13	6.13	B
S5620.781D-45	S5820.781D	ACSR ACSR ACSR	Linnet Oriole Chickadee	336.4 336.4 397.5	26/7 30/7 18/1	0.720 0.741 0.743	20AH	0.50	3.00	—	7.16	5.25	D
S5676.781-45	S5876.781	ACSR ACSR	Linnet Chickadee	336.4 397.5	26/7 18/1	0.720 0.743	76AH	0.50	1.30	—	5.35	5.35	B
S5676.750-45	S5876.750	AAC	Canna	397.5	19	0.724	76AH	0.50	1.30	—	5.35	5.35	B
S5676.750D-45	S5876.750D	AAC	Canna	397.5	19	0.724	76AH	0.50	3.00	—	7.02	3.98	D
S5620.812-45	S5820.812	ACSR AAC AAC AAC AAC	Brant Goldentuft Yarrow Cosmos Syringa	397.5 450 450 477 477	24/7 19 37 19 37	0.772 0.770 0.772 0.793 0.795	20AH	0.50	1.30	—	6.13	6.13	B
S5620.812D-45	S5820.812D	ACSR AAC AAC AAC AAC	Brant Goldentuft Yarrow Cosmos Syringa	397.5 450 450 477 477	24/7 19 37 19 37	0.772 0.770 0.772 0.793 0.795	20AH	0.50	3.00	—	7.16	5.25	D
S5620.844-45	S5820.844	ACSR ACSR	Ibis Lark	397.5 397.5	26/7 30/7	0.783 0.806	20AH	0.50	1.30	—	6.13	6.13	B
S5624.875-45	S5824.875	ACSR AAC AAC AAC AAC	Pelican Cosmos Syringa Zinnia Hyacinth	477 477 477 500 500	18/1 19 37 19 37	0.814 0.793 0.795 0.811 0.813	24AH	0.60	1.50	—	7.58	7.58	B
S5624.875D-45	S5824.875D	ACSR AAC AAC AAC AAC	Pelican Cosmos Syringa Zinnia Hyacinth	477 477 477 500 500	18/1 19 37 19 37	0.814 0.793 0.795 0.811 0.813	24AH	0.50	3.00	—	8.27	6.81	D
S5624.938-45	S5824.938	ACSR ACSR ACSR ACSR AAC AAC AAC	Flicker Hawk Hen Osprey Dahlia Mistletoe Meadowsweet	477 477 477 556.5 556.5 556.5 600	24/7 26/7 30/7 18/1 19 37 37	0.846 0.858 0.883 0.879 0.856 0.858 0.891	24AH	0.60	1.50	—	7.58	7.58	B
S5624.938D-45	S5824.938D	ACSR ACSR ACSR ACSR AAC AAC AAC	Flicker Hawk Hen Osprey Dahlia Mistletoe Meadowsweet	477 477 477 556.5 556.5 556.5 600	24/7 26/7 30/7 18/1 19 37 37	0.846 0.858 0.883 0.879 0.856 0.858 0.891	24AH	0.50	3.00	—	8.47	5.90	D
S5624.969-45	S5824.969	ACSR ACSR AAC AAC	Parakeet Dove Orchid Heuchera	556.5 556.5 636 650	24/7 26/7 37 37	0.914 0.927 0.918 0.928	24AH	0.60	1.50	—	7.58	7.58	B
S5624.969D-45	S5824.969D	ACSR ACSR AAC AAC	Parakeet Dove Orchid Heuchera	556.5 556.5 636 650	24/7 26/7 37 37	0.914 0.927 0.918 0.928	24AH	0.50	3.00	—	8.83	5.34	D

© 2010, AFL, all rights reserved. PP-3-00437, Revision 10, 9.3.2024
Specifications are subject to change without notice.

AFL | AFLglobal.com
1 (800) 890-8878

S5600-45 Series, S5800 Series Terminal Connectors

Ordering Information

CATALOG NUMBER		CONDUCTOR					DIE SIZE ALUMINUM HEX DIE	DIMENSIONS (inches)					PAD SIZE
45 DEGREE	90 DEGREE	ACSR OR AAC	CODE WORD	SIZE KCMil	STRANDING Al/St	DIAMETER IN INCHES		A	B	C	L	L1	
S5627.100-45	S5827.100	ACSR	Eagle	556.5	30/7	0.953	27AH	0.40	3.00	—	7.35	7.35	D
		ACSR	Peacock	605	24/7	0.953							
		ACSR	Squab	605	26/7	0.966							
		ACSR	Swift	636	36/1	0.930							
		ACSR	Kingbird	636	18/1	0.940							
		AAC	Flag	700	61	0.964							
S5627.106-45	S5827.106	ACSR	Teal	605	30/19	0.994	27AH	0.40	3.00	—	7.35	7.35	D
		ACSR	Rook	636	24/7	0.977							
		ACSR	Grosbeak	636	26/7	0.990							
		ACSR	Egret	636	30/19	1.019							
		ACSR	Flamingo	666.6	24/7	1.000							
		AAC	Violet	715.5	37	0.974							
		AAC	Nasturtium	715.5	61	0.975							
		AAC	Petunia	750	37	0.997							
		AAC	Cattail	750	61	0.998							
S5630.109-45	S5830.109	ACSR	Stilt	715.5	24/7	1.036	30AH	0.50	3.00	—	10.38	7.63	D
		ACSR	Starling	715.5	26/7	1.051							
		ACSR	Coot	795	36/1	1.040							
		AAC	Arbutus	795	37	1.026							
		AAC	Lilac	795	61	1.028							
		AAC	—	800	37	1.031							
		AAC	Heliotrope	800	61	1.031							
S5630.109E-45	—	ACSR	Stilt	715.5	24/7	1.036	30AH	1.00	4.00	4.50	9.75	—	E
		ACSR	Starling	715.5	26/7	1.051							
		ACSR	Coot	795	36/1	1.040							
		AAC	Arbutus	795	37	1.026							
		AAC	Lilac	795	61	1.028							
		AAC	—	800	37	1.031							
		AAC	Heliotrope	800	61	1.031							
—	S5830.109E	ACSR	Stilt	715.5	24/7	1.036	30AH	0.50	4.00	4.50	—	7.63	E
		ACSR	Starling	715.5	26/7	1.051							
		ACSR	Coot	795	36/1	1.040							
		AAC	Arbutus	795	37	1.026							
		AAC	Lilac	795	61	1.028							
		AAC	—	800	37	1.031							
		AAC	Heliotrope	800	61	1.031							
S5630.109G-45	S5830.109G	ACSR	Stilt	715.5	24/7	1.036	30AH	0.50	6.00	—	7.63	7.63	G
		ACSR	Starling	715.5	26/7	1.051							
		ACSR	Coot	795	36/1	1.040							
		AAC	Arbutus	795	37	1.026							
		AAC	Lilac	795	61	1.028							
		AAC	—	800	37	1.031							
		AAC	Heliotrope	800	61	1.031							
S5630.116-45	S5830.116	ACSR	Redwing	715.5	30/19	1.081	30AH	0.50	3.00	—	10.38	7.63	D
		ACSR	Tern	795	45/7	1.063							
		ACSR	Condor	795	54/7	1.093							
		ACSR	Drake	795	26/7	1.108							
		ACSR	Cuckoo	795	24/7	1.092							
		AAC	Snapdragon	900	61	1.094							
S5630.116E-45	—	ACSR	Redwing	715.5	30/19	1.081	30AH	1.00	4.50	4.50	9.75	—	E
		ACSR	Tern	795	45/7	1.063							
		ACSR	Condor	795	54/7	1.093							
		ACSR	Drake	795	26/7	1.108							
		ACSR	Cuckoo	795	24/7	1.092							
		AAC	Snapdragon	900	61	1.094							
—	S5830.116E	ACSR	Redwing	715.5	30/19	1.081	30AH	0.50	4.00	4.00	—	7.63	E
		ACSR	Tern	795	45/7	1.063							
		ACSR	Condor	795	54/7	1.093							
		ACSR	Drake	795	26/7	1.108							
		ACSR	Cuckoo	795	24/7	1.092							
		AAC	Snapdragon	900	61	1.094							

© 2010, AFL, all rights reserved. PP-3-00437, Revision 10, 9.3.2024
Specifications are subject to change without notice.

AFL | AFLglobal.com
1 (800) 890-8878

S5600-45 Series, S5800 Series Terminal Connectors

Ordering Information

CATALOG NUMBER		CONDUCTOR					DIE SIZE ALUMINUM HEX DIE	DIMENSIONS (inches)					PAD SIZE
45 DEGREE	90 DEGREE	ACSR OR AAC	CODE WORD	SIZE KCMil	STRANDING Al/St	DIAMETER IN INCHES		A	B	C	L	L1	
S5630.122-45	S5830.122	ACSR	Mallard	795	30/19	1.140	30AH	0.40	3.00	—	10.38	7.63	D
		ACSR	Ruddy	900	45/7	1.131							
		ACSR	Canary	900	54/7	1.162							
		ACSR	Catbird	954	36/1	1.140							
		ACSR	Rail	954	45/7	1.165							
		AAC	Magnolia	954	37	1.124							
		AAC	Goldenrod	954	61	1.126							
		AAC	Camellia	1000	61	1.152							
		AAC	Bluebell	1033.5	37	1.170							
		AAC	Larkspur	1033.5	61	1.172							
S5630.125-45	S5830.125	ACSR	Cardinal	954	54/7	1.196	30AH	0.40	3.00	—	10.38	7.63	D
		ACSR	Tanager	1033.5	36/1	1.186							
S5634.128-45	S5834.128	ACSR	Ortolan	1033.5	45/7	1.212	34AH	0.60	3.00	—	10.50	8.20	D
		AAC	Marigold	1113	61	1.216							
S5634.134-45	S5834.134	ACSR	Curlew	1033.5	54/7	1.244	34AH	0.60	3.00	—	10.50	8.20	D
		ACSR	Bluejay	1113	45/7	1.259							
		AAC	Hawthorn	1192.5	61	1.258							
		AAC	Narcissus	1272	61	1.300							
S5634.134E-45	—	ACSR	Curlew	1033.5	54/7	1.244	34AH	1.00	4.00	4.50	10.08	—	E
		ACSR	Bluejay	1113	45/7	1.259							
		AAC	Hawthorn	1192.5	61	1.258							
		AAC	Narcissus	1272	61	1.300							
—	S5834.134E	ACSR	Curlew	1033.5	54/7	1.244	34AH	1.00	4.00	4.00	—	10.08	E
		ACSR	Bluejay	1113	45/7	1.259							
		AAC	Hawthorn	1192.5	61	1.258							
		AAC	Narcissus	1272	61	1.300							
S5634.138-45	S5834.138	ACSR	Bunting	1192.5	45/7	1.302	34AH	0.60	3.00	—	10.50	8.20	D
		ACSR	Finch	1113	54/19	1.293							
S5636.144-45	S5836.144	ACSR	Bittern	1272	45/7	1.345	36AH	0.60	3.00	—	10.70	8.23	D
		ACSR	Grackle	1192.5	54/19	1.333							
		AAC	Columbine	1351	61	1.340							
		AAC	Carnation	1431	61	1.379							
S5636.144E-45	S5836.144E	ACSR	Bittern	1272	45/7	1.345	36AH	1.00	4.00	3.63	10.70	10.70	E
		ACSR	Grackle	1192.5	54/19	1.333							
		AAC	Columbine	1351	61	1.340							
		AAC	Carnation	1431	61	1.379							
S5636.147-45	S5836.147	ACSR	Pheasant	1272	54/19	1.382	36AH	0.60	3.00	—	10.70	8.23	D
		ACSR	Dipper	1351.5	45/7	1.386							
		ACSR	—	1500	91	1.412							
		AAC	Gladiolus	1510.5	61	1.187							
S5638.150-45	S5838.150	ACSR	Martin	1351.5	54/19	1.424	38AH	0.80	3.00	—	10.86	8.85	D
		ACSR	Bobolink	1431	45/7	1.427							
S5638.150E-45	S5838.150E	ACSR	Martin	1351.5	54/19	1.424	38AH	0.50	4.00	4.00	10.86	8.69	E
		ACSR	Bobolink	1431	45/7	1.427							
S5638.156-45	S5838.156	ACSR	Plover	1431	54/19	1.465	38AH	0.70	3.00	—	10.86	8.85	D
		ACSR	Nuthatch	1510.5	45/7	1.466							
		AAC	Coreopsis	1590	61	1.250							
		AAC	Dogwood	1590	91	1.454							
S5638.156E-45	—	ACSR	Plover	1431	54/19	1.465	38AH	1.00	4.50	4.50	10.60	—	E
		ACSR	Nuthatch	1510.5	45/7	1.466							
		AAC	Coreopsis	1590	61	1.250							
		AAC	Dogwood	1590	91	1.454							
—	S5838.156E	ACSR	Plover	1431	54/19	1.465	38AH	0.50	4.00	4.00	—	8.69	E
		ACSR	Nuthatch	1510.5	45/7	1.466							
		AAC	Coreopsis	1590	61	1.250							
		AAC	Dogwood	1590	91	1.454							
S5640.162-45	S5840.162	ACSR	Parrot	1510.5	54/19	1.506	40AH	0.70	3.00	—	9.95	9.95	D
		ACSR	Lapwing	1590	45/7	1.504							
		ACSR	Falcon	1590	54/19	1.545							
		AAC	Jessamine	1750	61	1.525							
S5640.162E-45	S5840.162E	ACSR	Parrot	1510.5	54/19	1.506	40AH	1.00	4.00	4.50	12.18	7.52	E
		ACSR	Lapwing	1590	45/7	1.504							
		ACSR	Falcon	1590	54/19	1.545							
		AAC	Jessamine	1750	61	1.525							

© 2010, AFL, all rights reserved. PP-3-00437, Revision 10, 9.3.2024
Specifications are subject to change without notice.

S5600-45 Series, S5800 Series Terminal Connectors

Ordering Information

CATALOG NUMBER		CONDUCTOR					DIE SIZE ALUMINUM HEX DIE	DIMENSIONS (inches)					PAD SIZE
45 DEGREE	90 DEGREE	ACSR OR AAC	CODE WORD	SIZE KCMil	STRANDING Al/St	DIAMETER IN INCHES		A	B	C	L	L1	
S5642.178-45	S5842.178	ACSR	Chukar	1780	84/19	1.602	42AH	0.70	4.00	4.50	12.37	10.28	E
		ACSR	—	2034	72/7	1.681							
		AAC	Cowslip	2000	91	1.630							
S5644.181-45	S5844.181	ACSR	Kiwi	2167	72/7	1.737	44AH	0.70	4.00	4.50	12.68	10.34	E
		AAC	Sagebrush	2250	91	1.729							
		AAC	—	2300	61	1.750							
		AAC	—	2300	91	1.750							
S5644.184-45	S5844.184	ACSR	Bluebird	2156	84/19	1.762	44AH	0.70	4.00	4.50	12.68	10.34	E
S5644.188-45	S5844.188	ACSR	Thrasher	2312	76/19	1.802	44AH	0.70	4.00	4.50	12.68	10.34	E
		AAC	Lupine	2500	91	1.823							
S5648.197-45	S5848.197	ACSR	Joree	2515	76/19	1.880	48AH	0.80	4.00	4.50	13.38	11.35	E
		AAC	Bitterroot	2750	91	1.912							

© 2010, AFL, all rights reserved. PP-3-00437, Revision 10, 9.3.2024
Specifications are subject to change without notice.

AFL | AFLglobal.com
1 (800) 890-8878

TYPE DP2L-N-V-EC

Substation Compression Terminal

Use for cable to terminal application.

Notes

Terminals to be identified with Catalog Number or assembly drawing and letter, conductor diameter range and die size.

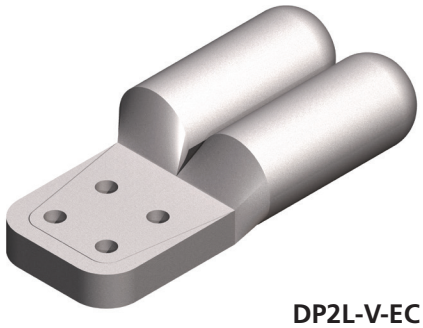

DP2L-V-EC

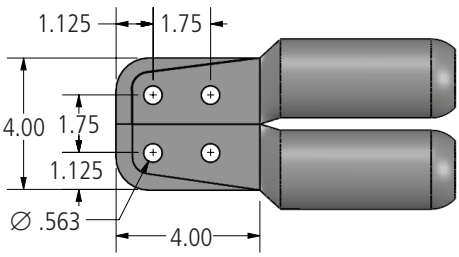

DP2L-4N4-V-EC SERIES

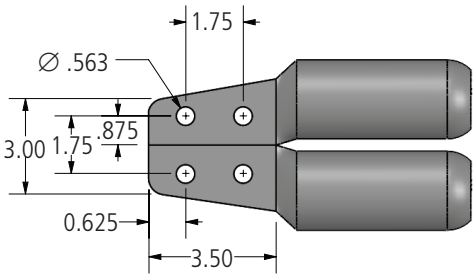

DP2L-4N-V-EC SERIES

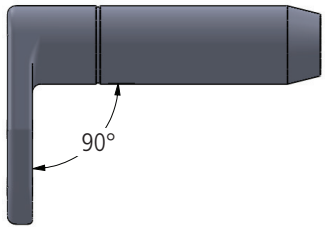

DP2LA-N-90-V-EC SERIES

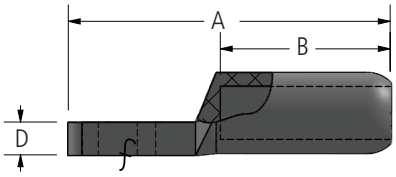

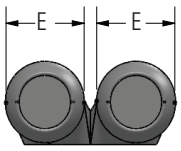

Ordering Information

Catalog Number	Conductor Range			Dimensions in inches				Die Size
	inches	AAC	ACSR	A	B	T	E	
DP2L100-4N-V-EC	1.026 - 1.196	795 - 900	715.5(26/7) - 954(54/7)	8.84	4.09	1.00	1.88	30AH
DP2L100-4N4-V-EC				9.46				
DP2L127-4N-V-EC	1.186 - 1.313	954 - 1272	954(54/7) - 1192.5(45/7)	9.19	4.44	1.00	2.12	34AH
DP2L127-4N4-V-EC				9.82				
DP2L151-4N4-V-EC	1.314 - 1.399	1300 - 1431	1192.5(54/19) - 1351.5(45/7)	10.08	4.70	1.00	2.25	36H
DP2L151-4N4-90-V-EC				—				
DP2L160-4N-V-EC	1.399 - 1.500	1500 - 1590	1351.5(45/7) - 1510.5(45/7)	9.69	4.94	1.00	2.38	38AH
DP2L160-4N4-V-EC				10.32				
DP2L180-4N-V-EC	1.501 - 1.630	1750 - 2000	1510.5(54/19) - 1780(84/19)	10.14	—	1.00	2.50	40AH
DP2L180-4N4-V-EC				11.14				
DP2L250-4N4-V-EC	18.02 - 1.857	2500	2300(76/19) - 2312(76/19)	13.88	8.50	1.13	2.75	44AH

© 2011, AFL, all rights reserved. PP-3-00317, Revision 4, 11.21.2024
Specifications are subject to change without notice.

© 2011, AFL, all rights reserved. PP-3-00317, Revision 4, 11.21.2024
Specifications are subject to change without notice.

Table of Contents

345 kV and 500 kV

345 kV and 500 kV Table of Contents . . . 473
Pictorial Index . . . 475

Bus Supports
Type PSD-V-AA, PSD-V-CH-AA . . . 479
Type HPS-HV-AA . . . 480
Type WPS-V-AA, WPS-V-CH-AA . . . 481
Type WPSSL-V-AA . . . 483
Type 34700 EHV . . . 485
Type WXBC-V-AA . . . 486
Type WXBC-HV-AA . . . 487
Type C2SWB-V-AA . . . 488
Type 15700 EHV . . . 491
Type 32800 EHV . . . 492
Type 35700 EHV . . . 492
Type 33800 EHV . . . 494

Couplers
Type CP-V-AA . . . 495
Type CPV-V-AA . . . 496
Type WWC-AA, WWC-E-AA . . . 497
Type WWCR-V-AA . . . 498
Type XWWC-V-AA, XWWC-HV-AA . . . 498
Type XWWCT-HV-AA . . . 500
Type WRP3C-8-V-AA . . . 501
Type 35300 EHV . . . 502

Vibration Dampers
Type 1705-EHV, 1706-EHV . . . 503

Corona Bells
Type CXBHV-AA, CXWHV-AA . . . 504

Tee Connectors
Type BAP-V-AA . . . 505
Type PFTS-V-AA . . . 506
Type BPA-75-V-AA . . . 508
Type WT-AA, WTA-75-AA, WTA-80-AA . . . 509
Type WTC-V-AA, WTF-V-AA . . . 512
Type WVBP-20-V-AA, WVBP-30-V-AA . . . 513
Type BPC-V-AA . . . 515
Type CFT-V-AA . . . 516
Type VBP-30-V-AA . . . 517

Tee Connectors
Type 1000-EHV . . . 518
Type WT3C-8-V-AA . . . 520
Type 3500-EHV . . . 521
Type BC-V-AA . . . 523
Type 34900-EHV . . . 525
Type 34992-EHV, 34993-EHV . . . 528
Type 34996-EHV, 34997-EHV . . . 531

A-Frames
Type A-Frame Assemblies . . . 534

Connectors
Type 15100-EHV . . . 535
Type 14700-EHV . . . 536

Terminal Connectors
Type TP-4N4-V-AA, TPA-4N4-90-V-AA . . . 537
Type WTPC-4N4-V-AA . . . 539
Type WTPI-V-AA, WTPIA-90-V-AA . . . 540
Type WTPIC-V-AA, WTPIC-E-V-AA . . . 542
Type WXL-V-AA, WXL-HV-AA . . . 543
Type TC-V-AA, T2C-V-AA . . . 544
Type WPC-V-AA, WP2C-V-AA . . . 546
Type WPCA-45-V-AA, WP2CA-45-V-AA . . . 549
Type 34200E-EHV . . . 551
Type 34300-EHV . . . 552
Type APTV-V-AA . . . 553
Type APT-V-AA . . . 554
Type TWTC-4N4-8-V-AA . . . 555
Type 34994-EHV, 34995E-EHV . . . 556
Type 34999E-EHV . . . 559
Type 33900, 34000 INLINE . . . 562
Type 38900-EHV . . . 564

Elbows
Type WEPI-AA, WEPI-30-AA, WEPI-45-AA, WEPI-60-AA . . . 565
Type 35400, 35500 . . . 567

Ground Jumpers
Type WGPHV-AA . . . 568
Type 34600-EHV . . . 569
Type 34650-EHV . . . 570
Type 34620-EHV . . . 571

© 2011, AFL, all rights reserved. PP-3-00621, Revision 15, 3.30.2023
Specifications are subject to change without notice.

Table of Contents

345 kV and 500 kV

Spacer Clamps

Type 1800-EHV 572
Type CAS-V-AA 573
Type CAS-N-V-AA, CAS-N-90-V-AA 576
Type 38100-EHV 579
Type 38400-EHV, 38500-EHV 580
Type 38300-EHV 581

Hardware Shields

Type CSBE-V-AA, 4040-EHV, 6040-EHV 582

Parallel Clamps

Type PC-V-AA 583
Type 35600-EHV 585

Stud Connector

Type SCB-F-V-AA. 586

Compression Connectors

Type 2800-EHV, 5300-EHV 587
Type 2900-EHV 588
Type 5400. 589
Type 5500. 590
Type 5000-EHV 592
Type 2500-EHV 593
Type 2600, 2700. 594
Type 3400-EHV 595
Type S5600-EHV, S5100-EHV. 596
Type S5600-45-EHV, S5800-EHV 599
Type DP2L-V-EC 604

© 2011, AFL, all rights reserved. PP-3-00621, Revision 15, 3.30.2023
Specifications are subject to change without notice.

345/500 kV Aluminum Accessories

345/500 kV Aluminum Bus Supports



PSD-V-AA, PSD-V-CH-AA SERIES

PG. 479



HPS-HV-AA SERIES

PG. 480



WPS-V-AA, WPS-V-CH-AA SERIES

PG. 481



WPSSL-V-AA SERIES

PG. 483



34700 EHV SERIES

PG. 485



WXBC-V-AA SERIES

PG. 486



WXBC-HV-AA SERIES

PG. 487



C2SWB-V-AA SERIES

PG. 488



15700 EHV SERIES

PG. 491



32800 EHV SERIES

PG. 492



35700 EHV SERIES

PG. 493



33800 EHV SERIES

PG. 494

345/500 kV Aluminum Couplers



CP-V-AA SERIES

PG. 495



CPV-V-AA SERIES

PG. 496



WWC-AA, WWC-E-AA SERIES

PG. 497



WWCR-V-AA SERIES

PG. 498



XWWC-V-AA, XWWC-HV-AA SERIES

PG. 499



XWWCT-HV-AA SERIES

PG. 500



WRP3C-8-V-AA SERIES

PG. 501



35300 EHV SERIES

PG. 502

345/500 kV Aluminum Vibration Damper



1705-EHV, 1706-EHV SERIES

PG. 503

345/500 kV Aluminum Corona Bells



CXBHV-AA, CXWHV-AA SERIES

PG. 504

345/500 kV Aluminum Tee Connectors



BAP-V-AA SERIES

PG. 505



PFTS-V-AA SERIES

PG. 506



BPA-75-V-AA SERIES

PG. 508

© 2011, AFL, all rights reserved. PP-3-00623, Revision 8, 3.28.2023
Specifications are subject to change without notice.

345/500 kV Aluminum Accessories

	WT-AA, WTA-75-AA, -80 SERIES
	PG. 509
	WTC-V-AA, WTF-V-AA SERIES
	PG. 512
	WVBP-20-V-AA, WVBP-30-V-AA SERIES
	PG. 513
	BPC-V-AA SERIES
	PG. 515
	CFT-AA SERIES
	PG. 516
	VBP-30-V-AA SERIES
	PG. 517
	1000-EHV SERIES
	PG. 518
	WT3C-8-V-AA SERIES
	PG. 520
	3500-EHV SERIES
	PG. 521

	BC-V-AA SERIES
	PG. 523
	34900-EHV SERIES
	PG. 525
	34992-EHV, 34993-EHV SERIES
	PG. 528
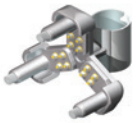	34996-EHV, 34997-EHV SERIES
	PG. 531

345/500 kV Aluminum A-Frames

	A-FRAME SERIES
	PG. 534

345/500 kV Aluminum Connectors

	15100-EHV SERIES
	PG. 535
	14700-EHV SERIES
	PG. 536

345/500 kV Aluminum Terminal Connectors

	TP-4N4-V-AA, TPA-4N4-90-V-AA SERIES
	PG. 537
	WTPC-4N4-V-AA SERIES
	PG. 539
	WTPI-V-AA, WTPIA-90-V-AA SERIES
	PG. 540
	WTPIC-V-AA , WTPIC-E-V-AA SERIES
	PG. 542
	WXL-V-AA, WXL-HV-AA SERIES
	PG. 543
	TC-V-AA, T2C-V-AA SERIES
	PG. 544
	WPC-V-AA, WP2C-V-AA SERIES
	PG. 546
	WPCA-45-V-AA WP2CA-45-V-AA SERIES
	PG. 549

© 2011, AFL, all rights reserved. PP-3-00623, Revision 8, 3.28.2023
Specifications are subject to change without notice.

345/500 kV Aluminum Accessories

	34200E-EHV SERIES PG. 551
	34300-EHV SERIES PG. 552
	APTV-AA SERIES PG. 553
	APT-AA SERIES PG. 554
	TWTC-N-V-AA SERIES PG. 555
	34994E-EHV, 34995E-EHV SERIES PG. 556
	34999E-EHV SERIES PG. 559
	33900, 34000 INLINE SERIES PG. 562
	38900-EHV SERIES PG. 564

345/500 kV Aluminum Elbows

	WEPI-AA SERIES PG. 565
	35400, 35500 SERIES PG. 567

345/500 kV Aluminum Ground Jumpers

	WGPHV-AA SERIES PG. 568
	34600-EHV SERIES PG. 569
	34650-EHV SERIES PG. 570
	34620-EHV SERIES PG. 571

345/500 kV Aluminum Spacer Clamps

	1800-EHV SERIES PG. 572
	CAS-V-AA SERIES PG. 573

	CAS-N-V-AA SERIES PG. 576
	CAS-N-90-V-AA SERIES PG. 576
	38100-EHV SERIES PG. 579
	38400-EHV SERIES PG. 580
	38500-EHV SERIES PG. 580
	38300-EHV SERIES PG. 581

345/500 kV Aluminum Hardware Shields

	CSBE-V-AA SERIES PG. 582
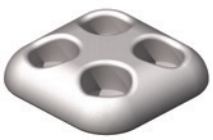	4040-EHV SERIES PG. 582
	6040-EHV SERIES PG. 582

© 2011, AFL, all rights reserved. PP-3-00623, Revision 8, 3.28.2023
Specifications are subject to change without notice.

345/500 kV Aluminum Accessories

345/500 kV Aluminum Parallel Clamps	
	PC-V-AA SERIES
	PG. 583
	35600-EHV SERIES
	PG. 585
345/500 kV Aluminum Stud Connectors	
	SCB-F-V-AA SERIES
	PG. 586
345/500 kV Aluminum Compression	
	2800-EHV, 5300-EHV
	PG. 587
	2900-EHV
	PG. 588
	5400
	PG. 589
	5500
	PG. 590
	5000-EHV
	PG. 592

	2500-EHV
	PG. 593
	2600
	PG. 594
	2700
	PG. 594
	3400-EHV
	PG. 595
	S5600-EHV, S5100 -EHV
	PG. 596
	S5600-45-EHV, S5800-EHV
	PG. 599
	DP2L-V-EC
	PG. 604

© 2011, AFL, all rights reserved. PP-3-00623, Revision 8, 3.28.2023
Specifications are subject to change without notice.

DOSSERT®

TYPE PSD-V-AA, PSD-V-CH-AA

Bolted Bus Support, Pipe, Slide or Tight Fit

Double ring support is designed to be corona free for 345 kV and 500 kV service. Support is designed to be slip or tight fit depending on top caps.

Material

Aluminum Alloy

Hardware

Galvanized steel bolts and lockwashers for mounting.
Yellow anodized aluminum bolts, nuts, and lockwashers.

Notes

- For Grade Five galvanized steel hardware, add "-GS5" to catalog number. EX: PSD400-7-V-AA-GS5



PSD-V-AA



PSD-V-CH-AA

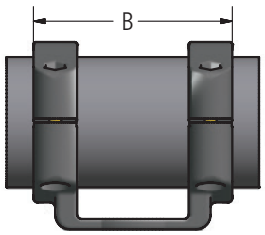

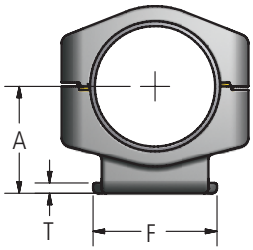

TIGHT FIT



SLIP FIT

Ordering Information

CATALOG NUMBER		S.P.S.	BOLT CIRCLE	DIMENSIONS IN INCHES				BOLT SIZE
STANDARD	WITH CHATTER SPRING			A	B	F	T	
PSD250-5-V-AA	PSD250-5-V-CH-AA	2 1/2	5	3 1/8	9 7/8	6 1/4	17/32	1/2
PSD300-3-V-AA	PSD300-3-V-CH-AA	3	3	3 5/8	10 1/8	4 1/4	5/8	5/8
PSD300-5-V-AA	PSD300-5-V-CH-AA	3	5	3 5/8	10 1/4	6 1/4	1/2	5/8
PSD300-7-V-AA	PSD300-7-V-CH-AA	3	7	3 5/8	14 1/2	8 1/2	1/2	5/8
PSD350-5-V-AA	PSD350-5-V-CH-AA	3 1/2	5	4	10 1/4	6 1/4	1/2	5/8
PSD350-7-V-AA	PSD350-7-V-CH-AA	3 1/2	7	4	14 1/2	8 1/2	1/2	5/8
PSD400-3-V-AA	PSD400-3-V-CH-AA	4	3	4 1/2	10 1/8	4 1/4	9/16	5/8
PSD400-5-V-AA	PSD400-5-V-CH-AA	4	5	4 1/2	10 1/4	6 3/8	9/16	5/8
PSD400-7-V-AA	PSD400-7-V-CH-AA	4	7	4 1/2	14 1/2	8 1/2	1/2	5/8
PSD500-3-V-AA	PSD500-3-V-CH-AA	5	3	5	10 1/8	4 1/4	9/16	5/8
PSD500-5-V-AA	PSD500-5-V-CH-AA	5	5	5	10 1/4	6 1/4	1/2	5/8
PSD500-5/7-V-AA	PSD500-5/7-V-CH-AA	5	5 & 7	5	12 3/4	8 1/2	5/8	5/8
PSD500-7-V-AA	PSD500-7-V-CH-AA	5	7	5	12 3/4	8 1/2	5/8	5/8
PSD600-5-V-AA	PSD600-5-V-CH-AA	6	5	5 1/2	10 1/4	6 1/4	1/2	5/8
PSD600-7-V-AA	PSD600-7-V-CH-AA	6	7	5 1/2	12 3/4	8 1/2	5/8	5/8
PSD800R-5-V-AA	PSD800R-5-V-CH-AA	8 DIA	5	7 1/2	10 1/4	6 1/4	1/2	5/8
PSD800R-7-V-AA	PSD800R-7-V-CH-AA	8 DIA	7	7 1/2	12 3/4	8 1/2	5/8	5/8
PSD800-5-V-AA	PSD800-5-V-CH-AA	8	5	6 7/8	10 1/4	6 1/4	1/2	5/8
PSD800-7-V-AA	PSD800-7-V-CH-AA	8	7	6 7/8	12 3/4	8 1/2	5/8	5/8

© 2011, AFL, all rights reserved. PP-3-00408, Revision 4, 2.14.18
Specifications are subject to change without notice.

345/500 kV Bus Supports

DOSSERT®

TYPE HPS-HV-AA

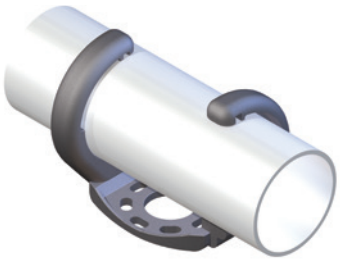

Hook support is designed to be corona free for 345 kV and 500 kV service. Support is designed for slip or tight fit applications; for tight fit application bus is field welded to support.

Material

Aluminum Alloy

Mounting Hardware

Galvanized steel bolts and lockwashers.

Notes

Weld in field for rigid support.

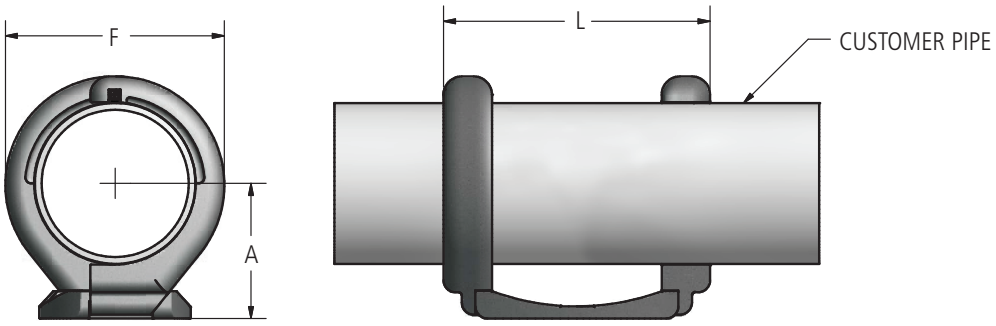

Ordering Information

CATALOG NUMBER		SPS / EHPS	BOLT CIRCLE	DIMENSIONS IN INCHES		
STANDARD	WITH CHATTER SPRING			A	B	L
HPS250-3-HV-AA	HPS250-3-HV-CH-AA	2 1/2	3	3	5 1/16	9 3/8
HPS300-3-HV-AA	HPS300-3-HV-CH-AA	3	3	3 5/8	5 1/4	9 3/8
HPS350-5-HV-AA	HPS350-5-HV-CH-AA	3 1/2	5	4	5 7/8	10 7/8
HPS400-5-HV-AA	HPS400-5-HV-CH-AA	4	5	4 1/2	6 7/8	11
HPS400-7-HV-AA	HPS400-7-HV-CH-AA	4	7	4 1/2	6 7/8	13 1/2
HPS500-5-HV-AA	HPS500-5-HV-CH-AA	5	5	5	8 1/8	11
HPS500-7-HV-AA	HPS500-7-HV-CH-AA	5	7	5	7 7/8	13 7/8
HPS600-5-HV-AA	HPS600-5-HV-CH-AA	6	5	5 1/2	9 1/8	10 7/8
HPS600-7-HV-AA	HPS600-7-HV-CH-AA	6	7	5 1/2	9 1/8	10 7/8
HPS800-5-HV-AA	HPS800-5-HV-CH-AA	8	5	6 1/2	11 3/16	11
HPS800-10-HV-AA	HPS800-10-HV-CH-AA	8	10	6 1/2	11 1/16	17 5/8

© 2011, AFL, all rights reserved. PP-3-00375, Revision 1, 12.9.2022
Specifications are subject to change without notice.

DOSSERT®

TYPE WPS-V-AA, WPS-V-CH-AA

Welded Ring Bus Support



Double ring support is designed to be corona free for 345 kV and 500 kV service. Support is designed to be slip or tight fit; for tight fit bus is field weld to support.

Material

Aluminum Alloy

Mounting Hardware

Galvanized steel bolts and lockwashers.

Notes

- For a 5" pipe, with a 5" BC, high voltage, with a chatter spring, use WPS500-5-V-CH-AA.

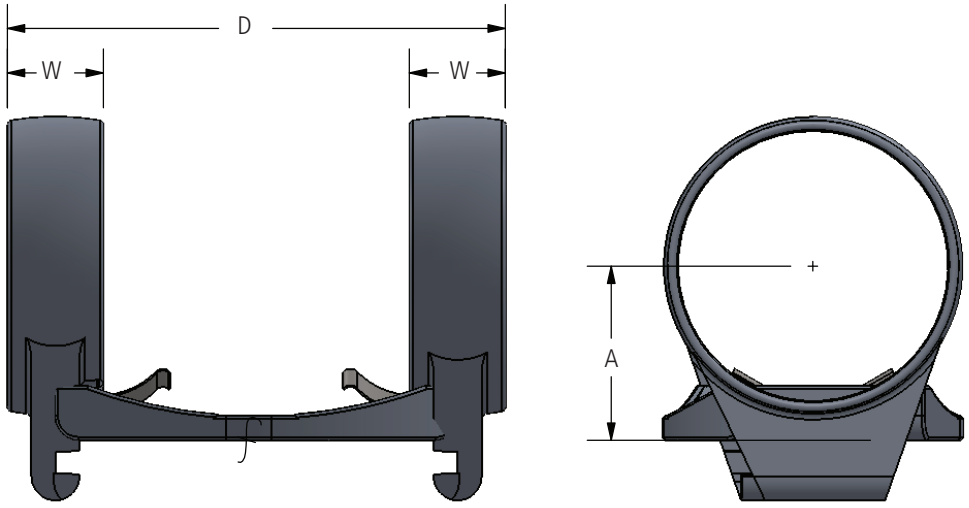

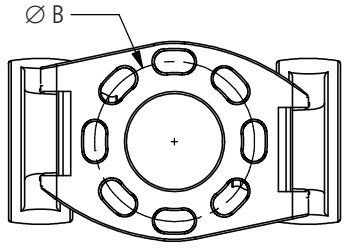

PAD DETAIL A

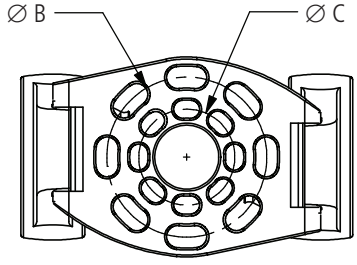

PAD DETAIL B

continued

© 2011, AFL, all rights reserved. PP-3-00542, Revision 1, 5.18.18
Specifications are subject to change without notice.

DOSSERT®

TYPE WPS-V-AA, WPS-V-CH-AA

Welded Ring Bus Support

Ordering Information

CATALOG NUMBER		SPS	DETAIL	DIMENSIONS IN INCHES				
STANDARD	WITH CHATTER SPRING			A	B	C	D	W
WPS250-3-V-AA	WPS250-3-V-CH-AA	2.5	A	4.13	3.00	-	7.25	1.50
WPS250-5-V-AA	WPS250-5-V-CH-AA	2.5	A	4.13	5.00	-	10.00	1.50
WPS300-3-V-AA	WPS300-3-V-CH-AA	3	A	3.63	3.00	-	9.13	2.00
WPS300-3/5-V-AA	WPS300-3/5-V-CH-AA	3	B	3.63	3.00	5.00	10.38	2.00
WPS300-5-V-AA	WPS300-5-V-CH-AA	3	A	3.63	5.00	-	10.38	2.00
WPS300-5/7-V-AA	WPS300-5/7-V-CH-AA	3	B	3.63	5.00	7.00	12.88	2.00
WPS300-7-V-AA	WPS300-7-V-CH-AA	3	A	3.63	7.00	-	12.88	2.00
WPS350-3-V-AA	WPS350-3-V-CH-AA	3.5	A	4.00	3.00	-	9.13	2.00
WPS350-3/5-V-AA	WPS350-3/5-V-CH-AA	3.5	B	4.00	3.00	5.00	10.38	2.00
WPS350-5-V-AA	WPS350-5-V-CH-AA	3.5	A	4.00	5.00	-	10.38	2.00
WPS350-5/7-V-AA	WPS350-5/7-V-CH-AA	3.5	B	4.00	5.00	7.00	12.88	2.00
WPS350-7-V-AA	WPS350-7-V-CH-AA	3.5	A	4.00	7.00	-	12.88	2.00
WPS400-3-V-AA	WPS400-3-V-CH-AA	4	A	4.50	3.00	-	9.13	2.00
WPS400-3/5-V-AA	WPS400-3/5-V-CH-AA	4	B	4.50	3.00	5.00	10.38	2.00
WPS400-5-V-AA	WPS400-5-V-CH-AA	4	A	4.50	5.00	-	11.00	2.25
WPS400-5/7-V-AA	WPS400-5/7-V-CH-AA	4	B	4.50	5.00	7.00	12.88	2.00
WPS400-7-V-AA	WPS400-7-V-CH-AA	4	A	4.50	7.00	-	12.88	2.00
WPS500-3/5-V-AA	WPS500-3/5-V-CH-AA	5	B	5.00	3.00	5.00	10.38	2.00
WPS500-5-V-AA	WPS500-5-V-CH-AA	5	A	5.03	5.00	-	11.00	2.00
WPS500-5/7-V-AA	WPS500-5/7-V-CH-AA	5	B	5.00	5.00	7.00	12.88	2.00
WPS500-7-V-AA	WPS500-7-V-CH-AA	5	A	5.00	7.00	-	12.88	2.00
WPS600-3/5-V-AA	WPS600-3/5-V-CH-AA	6	B	5.50	3.00	5.00	10.38	2.00
WPS600-5-V-AA	WPS600-5-V-CH-AA	6	A	5.50	5.00	-	11.50	2.50
WPS600-5/7-V-AA	WPS600-5/7-V-CH-AA	6	B	5.50	5.00	7.00	12.88	2.00
WPS600-7-V-AA	WPS600-7-V-CH-AA	6	A	5.50	7.00	-	12.88	2.00

© 2011, AFL, all rights reserved. PP-3-00542, Revision 1, 5.18.18
Specifications are subject to change without notice.

DOSSERT®
TYPE WPSSL-V-AA
Aluminum Welded Bus Support, Slide or Fixed Type



Pipe or bus tube is welded to support. Designed for 500 kV service. The support is then bolted directly into the insulator. Bolt sleeves allow the whole support to slide on the insulator. Bolt sleeves for rigid fix support can be ordered.

Material
Aluminum Alloy

Mounting Hardware
Galvanized steel bolts and lockwashers.

Notes
Add "-R" to catalog number for rigid fit order:
WPSSL300-5-R-V-AA

Add "-SR" for slip and rigid fix order:
WPSSL300-5-SR-V-AA

For chatter spring add "-CH" to catalog number order: WPSSL300-5-CH-V-AA

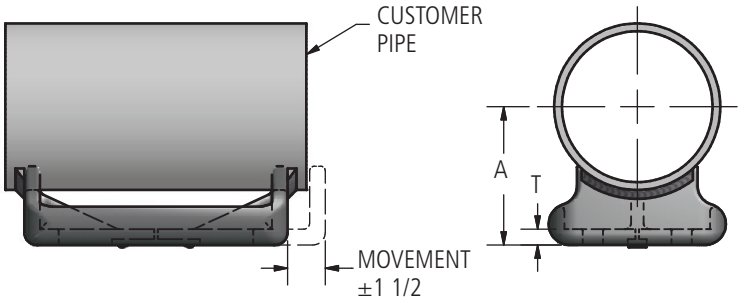

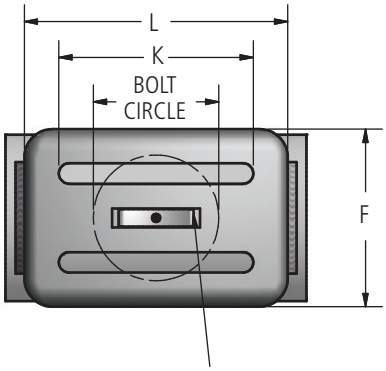

"-CH" CHATTER SPRING - ST. STEEL
(FOR ASSEMBLY TYPE 1 ONLY)

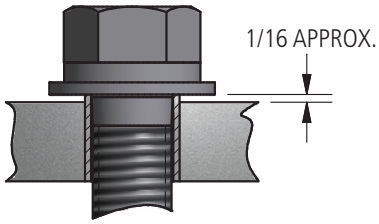

SLIDE BUS SUPPORT
ASSEMBLY 1

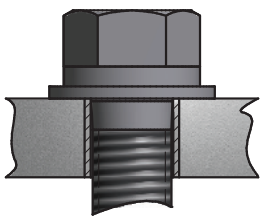

RIGID FIXED BUS SUPPORT
ASSEMBLY 2

© 2011, AFL, all rights reserved. PP-3-00540, Revision 1, 3.28.14
Specifications are subject to change without notice.

DOSSERT®
TYPE WPSSL-V-AA
Aluminum Welded Bus Support, Slide or Fixed Type

Ordering Information

CATALOG NUMBER		SPS ALUM	BOLT CIRCLE	DIMENSIONS IN INCHES					BOLT SIZE
STANDARD	WITH CHATTER SPRING			A	F	K	L	T	
WPSSL250-3-V-AA	WPSSL250-3-CH-V-AA	2 1/2	3	3 1/8	4 3/4	5 1/2	8 1/2	1/2	1/2
WPSSL250-5-V-AA	WPSSL250-5-CH-V-AA	2 1/2	5	3 1/8	6 3/4	7 1/2	10 1/2	1/2	5/8
WPSSL250-7-V-AA	WPSSL250-7-CH-V-AA	2 1/2	7	3 1/8	8 3/4	9 1/2	12 1/2	1/2	3/4
WPSSL300-3-V-AA	WPSSL300-3-CH-V-AA	3	3	3 5/8	4 3/4	5 1/2	8 1/2	1/2	1/2
WPSSL300-5-V-AA	WPSSL300-5-CH-V-AA	3	5	3 5/8	6 3/4	7 1/2	10 1/2	1/2	5/8
WPSSL300-7-V-AA	WPSSL300-7-CH-V-AA	3	7	3 5/8	8 3/4	9 1/2	12 1/2	1/2	3/4
WPSSL350-3-V-AA	WPSSL350-3-CH-V-AA	3 1/2	3	4	4 3/4	5 1/2	8 1/2	5/8	1/2
WPSSL350-5-V-AA	WPSSL350-5-CH-V-AA	3 1/2	5	4	6 3/4	7 1/2	10 1/2	5/8	5/8
WPSSL350-7-V-AA	WPSSL350-7-CH-V-AA	3 1/2	7	4	8 3/4	9 1/2	12 1/2	5/8	3/4
WPSSL400-3-V-AA	WPSSL400-3-CH-V-AA	4	3	4 1/2	4 3/4	5 1/2	8 1/2	5/8	1/2
WPSSL400-5-V-AA	WPSSL400-5-CH-V-AA	4	5	4 1/2	6 3/4	7 1/2	10 1/2	5/8	5/8
WPSSL400-7-V-AA	WPSSL400-7-CH-V-AA	4	7	4 1/2	8 3/4	9 1/2	12 1/2	5/8	3/4
WPSSL500-3-V-AA	WPSSL500-3-CH-V-AA	5	3	5	4 3/4	5 1/2	8 1/2	5/8	1/2
WPSSL500-5-V-AA	WPSSL500-5-CH-V-AA	5	5	5	6 3/4	7 1/2	10 1/2	5/8	5/8
WPSSL500-7-V-AA	WPSSL500-7-CH-V-AA	5	7	5	8 3/4	9 1/2	12 1/2	5/8	3/4
WPSSL600-3-V-AA	WPSSL600-3-CH-V-AA	6	3	5 1/2	4 3/4	5 1/2	8 1/2	5/8	1/2
WPSSL600-5-V-AA	WPSSL600-5-CH-V-AA	6	5	5 1/2	6 3/4	7 1/2	10 1/2	5/8	5/8
WPSSL600-7-V-AA	WPSSL600-7-CH-V-AA	6	7	5 1/2	8 3/4	9 1/2	12 1/2	5/8	3/4
WPSSL800R-3-V-AA	WPSSL800R-3-CH-V-AA	8" O.D.	3	6 1/2	4 3/4	5 1/2	8 1/2	5/8	1/2
WPSSL800R-5-V-AA	WPSSL800R-5-CH-V-AA	8" O.D.	5	6 1/2	6 3/4	7 1/2	10 1/2	5/8	5/8
WPSSL800R-7-V-AA	WPSSL800R-7-CH-V-AA	8" O.D.	7	6 1/2	8 3/4	9 1/2	12 1/2	5/8	3/4

© 2011, AFL, all rights reserved. PP-3-00540, Revision 1, 3.28.14
Specifications are subject to change without notice.

DOSSERT®
TYPE 34700 EHV

Welded Vertical Bus Support

Vertical end support is designed to be corona free for 345 kV and 500 kV service. Slotted bolt holes in base provide for misalignment of insulator.

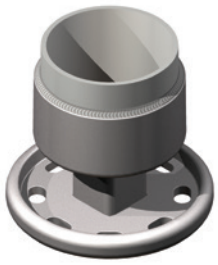

Material

Aluminum Alloy

Mounting Hardware

Galvanized steel bolts and lockwashers.

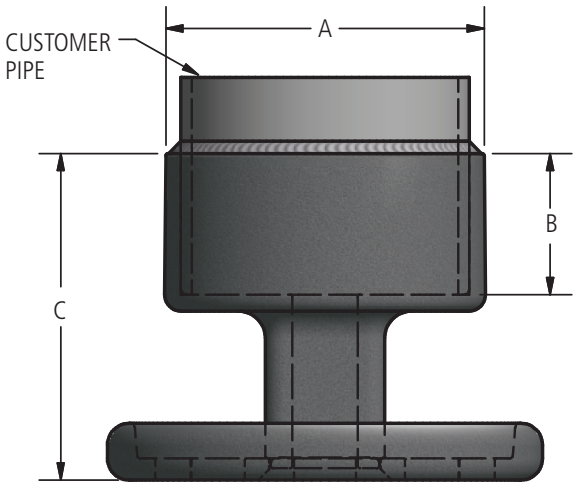

Ordering Information

CATALOG NUMBER	CONDUCTOR SIZE	DIMENSIONS IN INCHES			NOMINAL WEIGHT LBS
	SPS & EPHS	A	B	C	
5" BOLT CIRCLE					
34708-5 EHV	3	4.12	1.75	6.25	6.1
34709-5 EHV	3-1/2	4.69	2.00	6.50	6.4
34710-5 EHV	4	5.19	2.25	6.75	6.8
34712-5 EHV	5	6.25	2.75	7.25	7.5
34713-5 EHV	6	7.38	3.25	7.75	9.0
7" BOLT CIRCLE					
34708-7 EHV	3	4.12	1.75	6.25	8.1
34709-7 EHV	3-1/2	4.69	2.00	6.50	8.4
34710-7 EHV	4	5.19	2.25	6.75	8.8
34712-7 EHV	5	6.25	2.75	7.25	9.5
34713-7 EHV	6	7.38	3.25	7.75	11.0
34715-7 EHV	8 OD	9	4.25	8.75	13.0
34716-7 EHV	8	9.38	4.25	8.75	13.0

© 2011, AFL, all rights reserved. PP-3-00186, Revision 0, 3.3.11
Specifications are subject to change without notice.

DOSSERT®
TYPE WXBC-V-AA

Welded Expansion Bus Support Rated for 345 kV

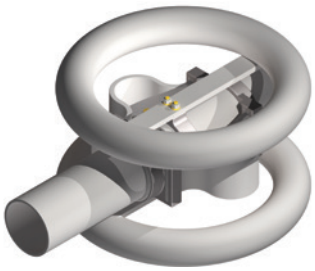

Material
Aluminum Alloy

Hardware
Galvanized steel mounting hardware included.
Stainless steel bolts, lockwashers, and flatwashers.

Notes
For chatter spring add "-CH" to catalog number, order: WXBC500-5-V-CH-AA.

For end plugs add "-WP" to catalog number, order: WXBC500-5-V-AA-WP.

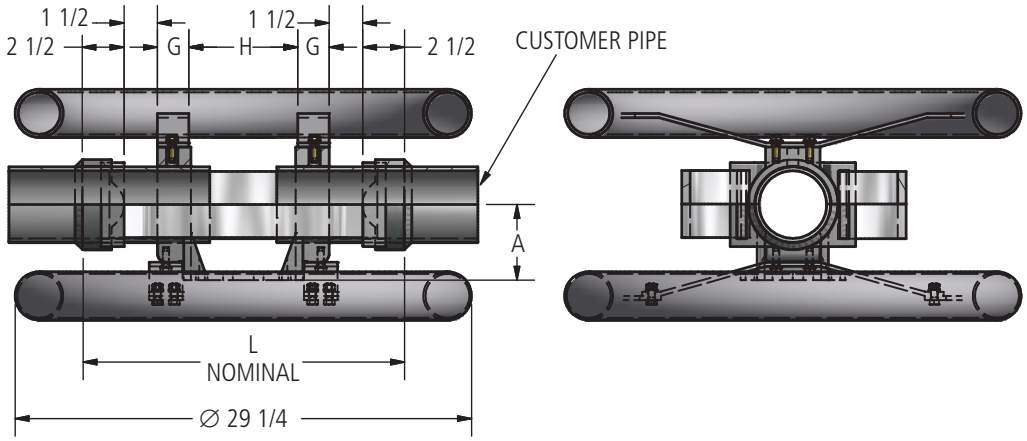

Ordering Information

CATALOG NUMBER		SPS	SCHEDULE NUMBER	BOLT CIRCLE	DIMENSIONS IN INCHES			
STANDARD	WITH CHATTER SPRING				A	G	H	L
WXBC300-5-V-AA	WXBC300-5-V-CH-AA	3	40	5	3 5/8	1 1/4	6 1/4	16 3/8
WXBC350-5-V-AA	WXBC350-5-V-CH-AA	3 1/2	40	5	4	1 1/4	6 1/4	16 3/8
WXBC400-5-V-AA	WXBC400-5-V-CH-AA	4	40	5	4 1/2	2	6 1/4	18 1/4
WXBC400-7-V-AA	WXBC400-7-V-CH-AA	4	40	7	4 1/2	2	8 1/2	20 1/2
WXBC400E-5-V-AA	WXBC400E-5-V-CH-AA	4	80	5	4 1/2	2	6 1/4	18 1/4
WXBC500-5-V-AA	WXBC500-5-V-CH-AA	5	40	5	5	2	6 1/4	18 1/4
WXBC500E-5-V-AA	WXBC500E-5-V-CH-AA	5	80	5	5	2	6 1/4	18 1/4
WXBC500-7- V-AA	WXBC500-7-V-CH-AA	5	40	7	5	2	8 1/2	20 1/2
WXBC600-5-V-AA	WXBC600-5-V-CH-AA	6	40	5	5 1/2	2	6 1/4	18 1/4
WXBC600-7-V-AA	WXBC600-7-V-CH-AA	6	40	7	5 1/2	2	8 1/2	20 1/2
WXBC600E-5-V-AA	WXBC600E-5-V-CH-AA	6	80	5	5 1/2	2	6 1/4	18 1/4
WXBC800E-5-V-AA	WXBC800E-5-V-CH-AA	8	80	5	6 7/8	2	6 1/4	18 1/4
WXBC800R-5-V-AA	WXBC800R-5-V-CH-AA	8" O.D.	-	5	7 1/2	2	6 1/4	18 1/4

Each item should be either SCH 40 or SCH 80 (E).

© 2011, AFL, all rights reserved. PP-3-00583, Revision 0, 3.9.11
Specifications are subject to change without notice.

345/500 kV
Bus Supports

DOSSERT®

TYPE WXBC-HV-AA

Welded Expansion Bus Support Rated for 500 kV



Material

Aluminum Alloy

Mounting Hardware

Galvanized mounting hardware included.

Hardware

Stainless steel bolts, lockwashers, and flatwashers.

Notes

For chatter spring add "-CH" to catalog number, order: WXBC500-5-HV-CH-AA.

For end plugs add "-WP" to catalog number, order: WXBC500-5-HV-AA-WP.

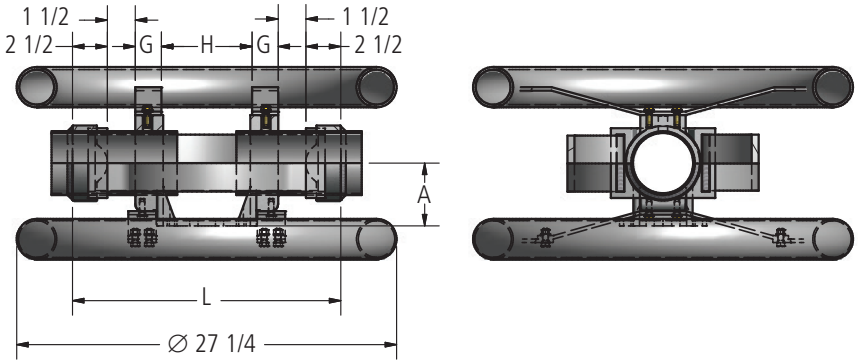

Ordering Information

CATALOG NUMBER		SPS	SCHEDULE NUMBER	BOLT CIRCLE	DIMENSIONS IN INCHES			
STANDARD	WITH CHATTER SPRING				A	G	H	L
WXBC400-5-HV-AA	WXBC400-5-HV-CH-AA	4	40	5	4 1/2	2	6 1/4	18 1/4
WXBC400-7-HV-AA	WXBC400-7-HV-CH-AA	4	40	7	4 1/2	2	8 1/2	20 1/2
WXBC400E-5-HV-AA	WXBC400E-5-HV-CH-AA	4	80	5	4 1/2	2	6 1/4	18 1/4
WXBC400E-7-HV-AA	WXBC400E-7-HV-CH-AA	4	80	7	4 1/2	2	8 1/2	20 1/2
WXBC500-5-HV-AA	WXBC500-5-HV-CH-AA	5	40	5	5	2	6 1/4	18 1/4
WXBC500-7- HV-AA	WXBC500-7-HV-CH-AA	5	40	7	5	2	8 1/2	20 1/2
WXBC500E-5-HV-AA	WXBC500E-5-HV-CH-AA	5	80	5	5	2	6 1/4	18 1/4
WXBC600-5-HV-AA	WXBC600-5-HV-CH-AA	6	40	5	5 1/2	2	6 1/4	18 1/4
WXBC600-7-HV-AA	WXBC600-7-HV-CH-AA	6	40	7	5 1/2	2	8 1/2	20 1/2
WXBC600E-5-HV-AA	WXBC600E-5-HV-CH-AA	6	80	5	5 1/2	2	6 1/4	18 1/4
WXBC800E-5-S-HV-AA	WXBC800E-5-S-HV-CH-AA	8	80	5	6 7/8	2	6 1/4	18 1/4
WXBC800R-5-S-HV-AA	WXBC800R-5-S-HV-CH-AA	8" OD	-	5	7 1/2	2	6 1/4	18 1/4
WXBC800R-7-S-HV-AA	WXBC800R-7-S-HV-CH-AA	8" OD	-	7	7 1/2	2 1/2	9 1/8	22 1/8

Each item should be either SCH 40 or SCH 80 (E).

© 2011, AFL, all rights reserved. PP-3-00582, Revision 0, 3.2.11
Specifications are subject to change without notice.

DOSSERT®
TYPE C2SWB-V-AA
Cable Support Clamp



Two-conductor strain bus support is desigend to be corona free for 500 kV service.

Material
Aluminum Alloy

Hardware
Aluminum bolts, lockwashers and nuts.

Mounting Hardware
Galvanized steel bolts and lockwashers.

Notes
1. For Stainless Steel Hardware, add "-SS" to catalog number.
   Example: C2SWB360-8-2-V-AA-SS
2. For Stainless Steel Bolts, Lockwashers and Everdur nuts, add "-SSHBN" to catalog number. Example: C2SWB250-8-5-V-AA-SSHBN

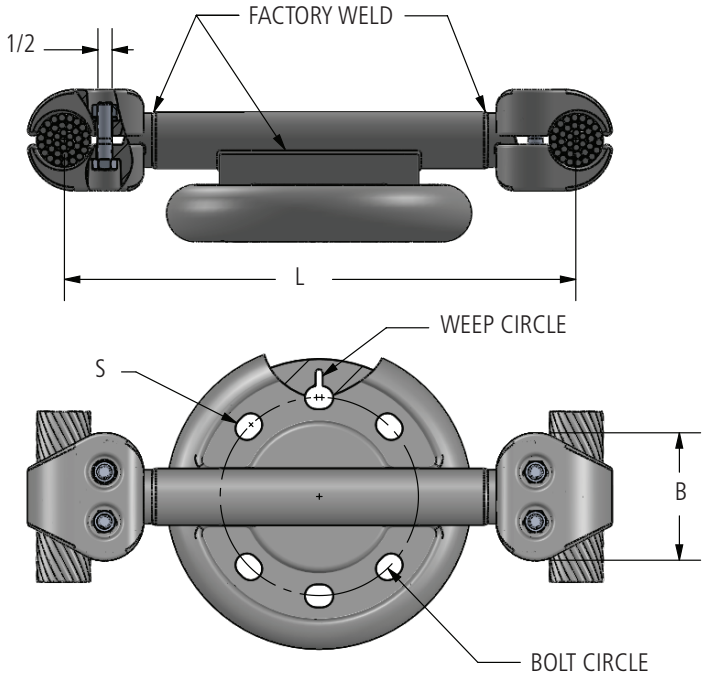

© 2011, AFL, all rights reserved. PP-3-00264, Revision 4, 9.4.18
Specifications are subject to change without notice.

DOSSERT®

TYPE C2SWB-V-AA

Cable Support Clamp

Ordering Information

CATALOG NUMBER	CABLE RANGE			BOLT CIRCLE	DIMENSIONS IN INCHES		
	ALUMINUM		ACSR				
	MIN	MAX			B	S	L
C2SWB79-12-5-V-AA	750MCM	795MCM	636 (18/1) (24/7) (26/7)	5	2	11/16	12
C2SWB79-18-5-V-AA	750MCM	795MCM	636 (18/1) (24/7) (26/7)	5	2	11/16	18
C2SWB95-8-5-V-AA	800MCM	954MCM	795 (45/7) (24/7) (26/7)	5	2	11/16	8
C2SWB95-10-5-V-AA	800MCM	954MCM	795 (45/7) (24/7) (26/7)	5	2	11/16	10
C2SWB95-12-5-V-AA	800MCM	954MCM	795 (45/7) (24/7) (26/7)	5	2	11/16	12
C2SWB95-18-5-V-AA	800MCM	954MCM	795 (45/7) (24/7) (26/7)	5	2	11/16	18
C2SWB95-18-7-V-AA	800MCM	954MCM	795 (45/7) (24/7) (26/7)	7	2	13/16	18
C2SWB103-6-5-V-AA	1000MCM	1033.5MCM	954 (45/7) (54/7)	5	2	11/16	6
C2SWB103-6-7-V-AA	1000MCM	1033.5MCM	954 (45/7) (54/7)	7	2	13/16	6
C2SWB103-12-5-V-AA	1000MCM	1033.5MCM	954 (45/7) (54/7)	5	2	11/16	12
C2SWB103-12-7-V-AA	1000MCM	1033.5MCM	954 (45/7) (54/7)	7	2	13/16	12
C2SWB103-18-5-V-AA	1000MCM	1033.5MCM	954 (45/7) (54/7)	5	2	11/16	18
C2SWB103-18-7-V-AA	1000MCM	1033.5MCM	954 (45/7) (54/7)	7	2	13/16	18
C2SWB127-12-5-V-AA	1113MCM	1272MCM	1033(54/7), 1113 (45/7) (54/19)	5	4 1/2	11/16	12
C2SWB127-12-7-V-AA	1113MCM	1272MCM	1033(54/7), 1113 (45/7) (54/19)	7	4 1/2	13/16	12
C2SWB127-18-5-V-AA	1113MCM	1272MCM	1033(54/7), 1113 (45/7) (54/19)	5	4 1/2	11/16	18
C2SWB127-18-7-V-AA	1113MCM	1272MCM	1033(54/7), 1113 (45/7) (54/19)	7	4 1/2	13/16	18
C2SWB143-12-5-V-AA	1300MCM	1431MCM	1272 (45/7) (54/19)	5	4 1/2	11/16	12
C2SWB143-18-5-V-AA	1300MCM	1431MCM	1272 (45/7) (54/19)	5	4 1/2	11/16	18
C2SWB143-18-7-V-AA	1300MCM	1431MCM	1272 (45/7) (54/19)	7	4 1/2	13/16	18
C2SWB160-6-5-V-AA	1500MCM	1600MCM 1272 ROPE L.	1431 (45/7) (54/19)	5	4 1/2	11/16	6
C2SWB160-6-7-V-AA	1500MCM	1600MCM 1272 ROPE L.	1431 (45/7) (54/19)	7	4 1/2	11/16	6
C2SWB160-12-5-V-AA	1500MCM	1600MCM 1272 ROPE L.	1431 (45/7) (54/19)	5	4 1/2	11/16	12
C2SWB160-12-7-V-AA	1500MCM	1600MCM 1272 ROPE L.	1431 (45/7) (54/19)	7	4 1/2	11/16	12
C2SWB160-18-5-V-AA	1500MCM	1600MCM 1272 ROPE L.	1431 (45/7) (54/19)	5	4 1/2	11/16	18
C2SWB160-18-7-V-AA	1500MCM	1600MCM 1272 ROPE L.	1431 (45/7) (54/19)	7	4 1/2	13/16	18
C2SWB180-8-5-V-AA	1700MCM	1800MCM	1590 (45/7) (54/19)	5	4 1/2	11/16	8
C2SWB180-12-5-V-AA	1700MCM	1800MCM	1590 (45/7) (54/19)	5	4 1/2	11/16	12
C2SWB180-18-5-V-AA	1700MCM	1800MCM	1590 (45/7) (54/19)	5	4 1/2	11/16	18
C2SWB180-18-7-V-AA	1700MCM	1800MCM	1590 (45/7) (54/19)	7	4 1/2	13/16	18
C2SWB205-6-5-V-AA	2000MCM	2049MCM	1780(84/19), 2034.5(72/7)	5	4 1/2	11/16	6
C2SWB205-12-5-V-AA	2000MCM	2049MCM	1780(84/19), 2034.5(72/7)	5	4 1/2	11/16	12
C2SWB205-13-5-V-AA	2000MCM	2049MCM	1780(84/19), 2034.5(72/7)	5	4 1/2	11/16	13

© 2011, AFL, all rights reserved. PP-3-00264, Revision 4, 9.4.18
Specifications are subject to change without notice.

DOSSERT®
TYPE C2SWB-V-AA
Cable Support Clamp

Ordering Information

CATALOG NUMBER	CABLE RANGE			BOLT CIRCLE	DIMENSIONS IN INCHES		
	ALUMINUM		ACSR				
	MIN	MAX			B	S	L
C2SWB205-18-5-V-AA	2000MCM	2049MCM	1780(84/19), 2034.5(72/7)	5	4 1/2	11/16	18
C2SWB205-18-7-V-AA	2000MCM	2049MCM	1780(84/19), 2034.5(72/7)	7	4 1/2	13/16	18
C2SWB205-43-5-V-AA	2000MCM	2049MCM	1780(84/19), 2034.5(72/7)	5	4 1/2	11/16	43
C2SWB240R-14-5-V-AA	—	2.40 O.D.	—	5	4 1/2	11/16	14
C2SWB250-8-5-V-AA	2250MCM	2500MCM	2156(84/19), 2300(96/19)	5	4 1/2	11/16	8
C2SWB250-12-5-V-AA	2250MCM	2500MCM	2156(84/19), 2300(96/19)	5	4 1/2	11/16	12
C2SWB250-13-5-V-AA	2250MCM	2500MCM	2156(84/19), 2300(96/19)	5	4 1/2	11/16	13
C2SWB250-14-7-V-AA	2250 MCM	2500MCM	2156(84/19), 2300(96/19)	7	4 1/2	11/16	14
C2SWB250-18-5-V-AA	2250MCM	2500MCM	2156(84/19), 2300(96/19)	5	4 1/2	11/16	18
C2SWB250-18-7-V-AA	2250MCM	2500MCM	2156(84/19), 2300(96/19)	7	4 1/2	13/16	18
C2SWB275-18-5-V-AA	—	2750MCM	2515(76/19)	5	4 1/2	11/16	18
C2SWB275-18-7-V-AA	—	2750MCM	2515(76/19)	7	4 1/2	13/16	18
C2SWB300-12-7-V-AA	2750MCM	3000MCM	—	7	4 1/2	13/16	12
C2SWB350-6-5-V-AA	—	3500MCM	—	5	5 1/2	11/16	6
C2SWB350-13-5-V-AA	—	3500 MCM	—	5	5 1/2	11/16	13

© 2011, AFL, all rights reserved. PP-3-00264, Revision 4, 9.4.18
Specifications are subject to change without notice.

DOSSERT®
TYPE 15700 EHV

Support, Bolted, Slip & Fixed

Single ring support is designed to be corona free for 345 kV and 500 kV service. Support is designed to be slip or tight fit; for tight fit bus is field welded to support. Stainless steel chatter springs are supplied as standard item for slip fit applications.

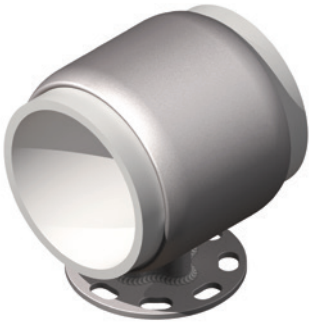

Material

Aluminum Alloy

Mounting Hardware

Galvanized steel bolts and lockwashers.

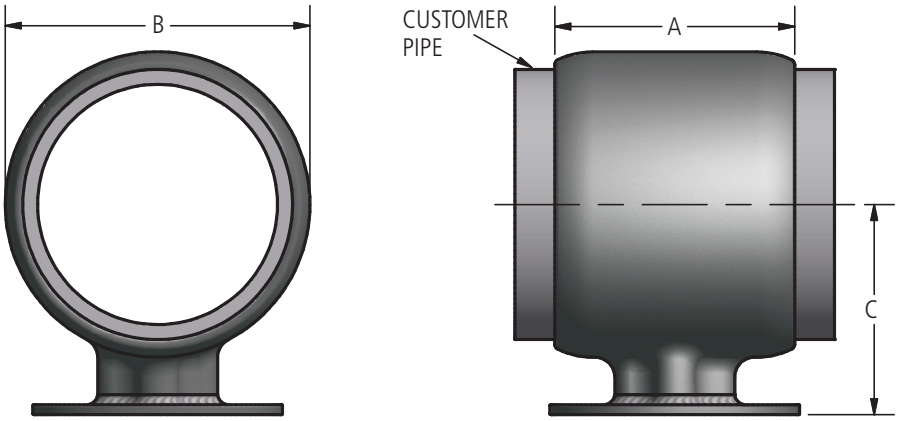

Ordering Information

CATALOG NUMBER	CONDUCTOR SIZE	DIMENSIONS IN INCHES			NOMINAL WEIGHT LBS
	SPS & EPHS	A	B	C	
5" BOLT CIRCLE					
15708-5 EHV	3	3.00	4.44	3.62	3.2
15709-5 EHV	3 1/2	3.50	5.00	4.00	3.8
15710-5 EHV	4	4.00	5.56	4.50	4.6
15712-5 EHV	5	5.00	6.44	5.00	5.4
15713-5 EHV	6	6.00	7.62	5.50	7.7
7" BOLT CIRCLE					
15708-7 EHV	3	3.00	4.44	3.62	4.3
15709-7 EHV	3 1/2	3.50	5.00	4.00	4.9
15710-7 EHV	4	4.00	5.56	4.50	5.7
15712-7 EHV	5	5.00	6.44	5.00	6.5
15713-7 EHV	6	6.00	7.62	5.50	8.8

© 2011, AFL, all rights reserved. PP-3-00156, Revision 0, 3.3.11
Specifications are subject to change without notice.

DOSSERT®
TYPE 32800 EHV



Support, Bolted, Wave Trap-Type

Wave trap support is designed to be corona free for 345 kV and 500 kV service. Support is combination wave trap support and tight fit bus support designed with standard bolt circle pattern on top and bottom mounting surfaces. Support is supplied with bus clamp hardware and two sets of insulator mounting hardware. Distance from the centerline of the bus to top and bottom mounting surfaces is standard NEMA center line distance.

Material

Aluminum Alloy

Mounting Hardware

Galvanized steel bolts and lockwashers.

Hardware

Yellow anodized aluminum bolts, nuts, and lockwashers.

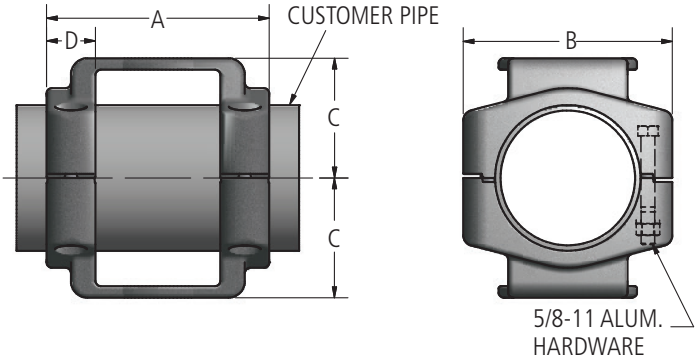

Ordering Information

CATALOG NUMBER	CONDUCTOR SIZE	DIMENSIONS IN INCHES				NOMINAL WEIGHT LBS
	SPS AND EPHS	A	B	C	D	
5" BOLT CIRCLE						
32807-5EHV	2 1/2	10.50	6.00	3.13	2.00	7.8
32808-5 EHV	3	10.50	7.25	3.62	2.00	8.8
32809-5 EHV	3 1/2	11.00	7.75	4.00	2.25	13.1
32810-5 EHV	4	11.00	8.25	4.50	2.25	15.8
32812-5 EHV	5	11.50	9.50	5.00	2.50	19.1
32813-5 EHV	6	11.50	10.50	5.50	2.50	19.7
7" BOLT CIRCLE						
32808-7 EHV	3	12.75	7.25	3.62	2.00	11.0
32809-7 EHV	3 1/2	13.25	7.75	4.00	2.25	14.9
32810-7 EHV	4	13.25	8.25	4.50	2.25	17.6
32812-7 EHV	5	13.75	9.50	5.00	2.50	20.9
32813-7 EHV	6	13.75	10.50	5.50	2.50	21.5

© 2011, AFL, all rights reserved. PP-3-00173, Revision 1, 2.8.18
Specifications are subject to change without notice.

DOSSERT®
TYPE 35700 EHV

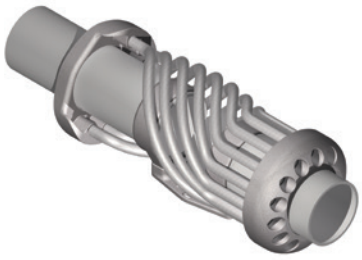

Expansion support is designed to be corona free for 500 kV service. Rope lay expansion provides for 2.6" (66 mm) of expansion or contraction. Dimension "D" shown is for an installation temperature of 68° F (20° C). For other installation temperatures, see the General Information Section on page 11 in the Substation Accessories catalog. Stainless steel chatter springs are supplied; weld end plugs can be supplied if required.

Material
Aluminum Alloy

Mounting Hardware
Galvanized steel bolts and lockwashers.

Notes
- For end plugs, add "-WP" to catalog number for Schedule 40 pipe, "-WPE" for Schedule 80. EX: 35712-7EHV-WPE.

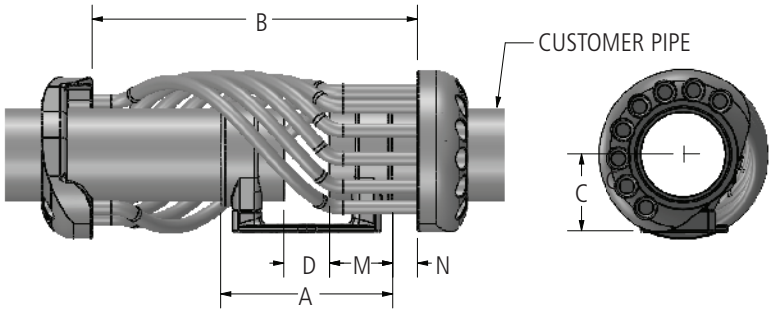

Ordering Information

CATALOG NUMBER	CONDUCTOR SIZE	DIMENSIONS IN INCHES						NOMINAL WEIGHT LBS
	SPS & EPHS	A	B	C	D	M	N	
5" BOLT CIRCLE								
35708-5 EHV	3	10.50	20.50	3.62	3.25	3.62	1.75	21.0
35709-5 EHV	3 1/2	11.00	21.94	4.00	3.25	3.88	1.75	22.0
35710-5 EHV	4	11.00	21.94	4.50	3.25	3.88	1.75	23.0
35712-5 EHV	5	11.50	20.62	5.00	3.25	4.12	1.75	26.0
35713-5 EHV	6	11.50	23.12	5.50	3.25	4.12	1.75	34.0
35714-5 EHV	8	12.75	25.00	6.91	3.25	6.50	1.75	40.0
7" BOLT CIRCLE								
35708-7 EHV	3	12.75	22.75	3.62	3.25	4.75	1.75	22.0
35709-7 EHV	3 1/2	13.25	24.19	4.00	3.25	5.00	1.75	23.0
35710-7 EHV	4	13.25	24.19	4.50	3.25	5.00	1.75	24.0
35712-7 EHV	5	13.75	22.88	5.00	3.25	5.25	1.75	27.0
35713-7 EHV	6	13.75	25.38	5.50	3.25	5.25	1.75	35.0

© 2011, AFL, all rights reserved. PP-3-00196. Revision 3, 4.25.19
Specifications are subject to change without notice.

DOSSERT®
TYPE 33800 EHV
Cable Support

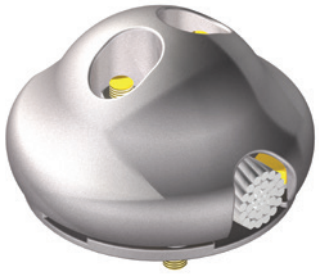

Single conductor strain bus support is designed to be corona free for 345 kV service. Support is designed with universal groove to accept conductors with diameter from 1.545" to 2.158".

Material
Aluminum Alloy

Mounting Hardware
Galvanized steel bolts and lockwashers.

Hardware
Yellow anodized aluminum bolts, nuts, and lockwashers.

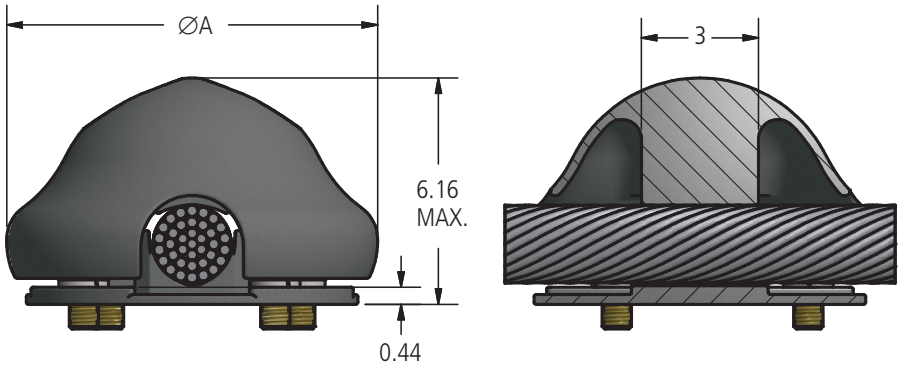

Ordering Information

CATALOG NUMBER	CONDUCTOR DIAMETER RANGE	DIMENSIONS IN INCHES	NOMINAL WEIGHT LBS
		A	
5" BOLT CIRCLE			
33805-5 EHV	1.545 - 2.158	7.25	4.5
7" BOLT CIRCLE			
33805-7 EHV	1.545 - 2.158	9.5	6.6

© 2011, AFL, all rights reserved. PP-3-00174, Revision 0, 3.3.11
Specifications are subject to change without notice.

DOSSERT®

TYPE CP-V-AA



Pipe-to-Pipe Coupler

Joins two pipes of the same size together corona free up to 500 kV.

Material

Aluminum Alloy

Hardware

Yellow anodized aluminum nuts, bolts, and lockwashers.

Notes

- For Grade Five Galvanized Steel Hardware add "-GS5" to catalog number. EX: CP400-V-AA-GS5
- For Stainless Steel bolts, lockwashers and Everdur nuts add "-SSHBN" to catalog number. EX: CP400-V-AASSHBN

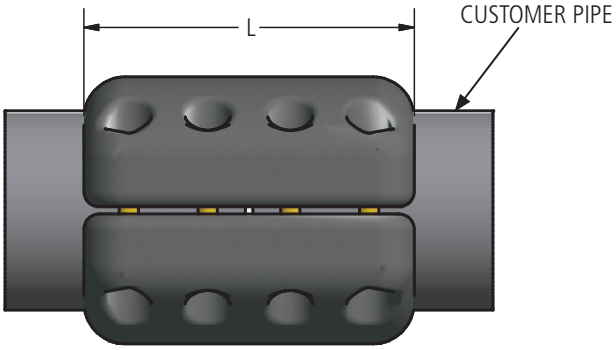

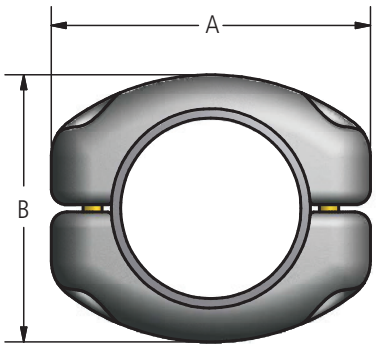

Ordering Information

CATALOG NUMBER	SPS	DIMENSIONS IN INCHES			BOLT SIZE	NUMBER BOLTS
		A	B	L		
CP250-V-AA	2 1/2	5 3/4	4 7/8	8 1/4	1/2	8
CP300-V-AA	3	7 3/8	5 1/8	10 1/4	5/8	8
CP350-V-AA	3 1/2	7 7/8	6 1/8	10 1/4	5/8	8
CP400-V-AA	4	8 3/8	6 5/8	12 1/4	5/8	8
CP500-V-AA	5	9 3/8	7 7/8	16 1/4	5/8	12
CP600-V-AA	6	10 5/8	8 7/8	11	5/8	8
CP800R-V-AA	8" OD	12	11 1/8	18 1/4	5/8	12
CP800-V-AA	8	11 7/8	10 7/8	18 1/4	5/8	12

© 2011, AFL, all rights reserved. PP-3-00289, Revision 1, 9.20.18
Specifications are subject to change without notice.

DOSSERT®

TYPE CPV-V-AA

Variable Angle Pipe Coupler

Pipe coupler is designed to be corona free for 345 kV and 500 kV service. Coupler designed to change angle to the installers suit.

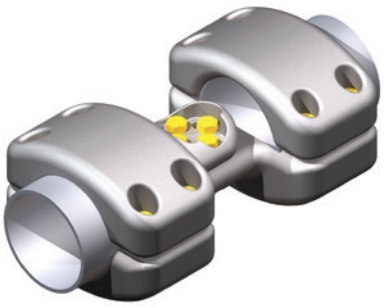

Material

Aluminum Alloy

Hardware

Yellow anodized aluminum bolts, nuts, and lockwashers.

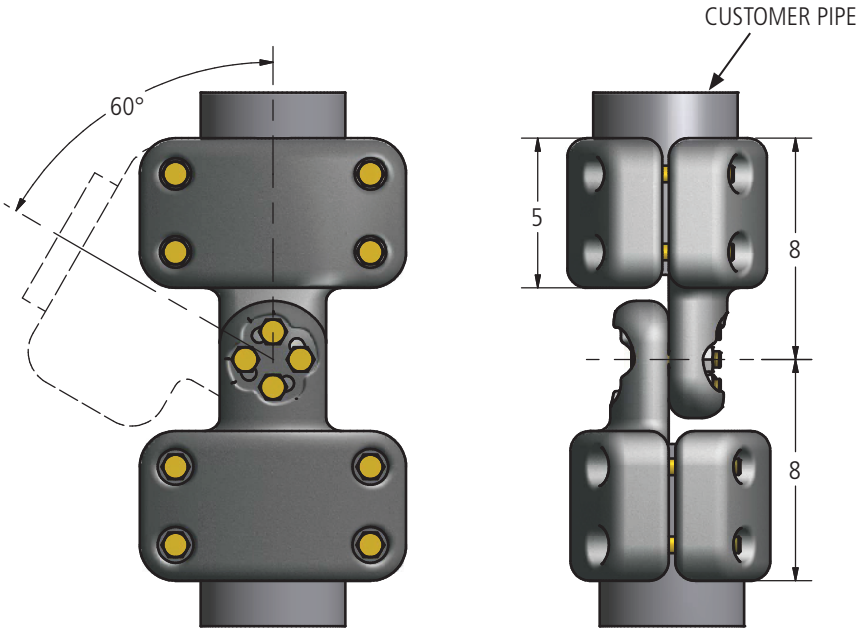

Ordering Information

CATALOG NUMBER	SPS	NOMINAL WEIGHT LBS
CPV400-V-AA	4	26
CPV500-V-AA	5	47
CPV600-V-AA	6	54

© 2011, AFL, all rights reserved. PP-3-00290, Revision 0, 3.3.11
Specifications are subject to change without notice.

DOSSERT®

TYPE WWC-AA, WWC-E-AA

Aluminum Welded Coupler Rated for 500 kV

Coupler is designed to make connections with high mechanical strength and high electrical conductivity.



Material

Aluminum tubing

Hardware

Aluminum cotter pin

Notes

For pipe sizes greater than 6 inch or special I.D. and O.D. applications, please contact AFL. A shorter version of this coupler is Type WS.

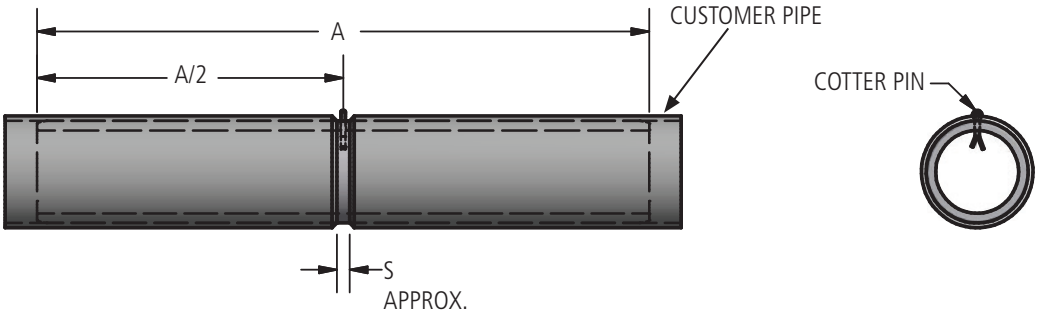

Ordering Information

CATALOG NUMBER		SPS / EPHS	DIMENSIONS (INCHES)	
SCHEDULE 40	SCHEDULE 80		A	S
WWC75-AA	WWC75E-AA	3/4	4-1/2	1/4
WWC100-AA	WWC100E-AA	1	6	1/4
WWC125-AA	WWC125E-AA	1-1/4	7-1/2	3/8
WWC150-AA	WWC150E-AA	1-1/2	9	3/8
WWC200-AA	WWC200E-AA	2	12	3/8
WWC250-AA	WWC250E-AA	2-1/2	15	1/2
WWC300-AA	WWC300E-AA	3	18	1/2
WWC350-AA	WWC350E-AA	3-1/2	21	1/2
WWC400-AA	WWC400E-AA	4	24	1/2
WWC450-AA	WWC450E-AA	4-1/2	24	1/2
WWC500-AA	WWC500E-AA	5	24	1/2
WWC600-AA	WWC600E-AA	6	24	5/8
WWC600-5/8-AA	—	6-5/8 WALL	12	5/8
WWC600R38-AA	—	6 OD 3/8 WALL	38	5/8
WWC800-AA	WWC800E-AA	8	24	5/8
WWC800R38-AA	—	8 OD 3/8 WALL	38	5/8
WWC800R-AA	—	8 OD 1/2 WALL	24	5/8
WWC800R9/32-AA	—	8 OD 9/32 WALL	12	5/8

© 2011, AFL, all rights reserved. PP-3-00576, Revision 1, 10.10.17
Specifications are subject to change without notice.

345/500 kV Aluminum Welded Couplers

DOSSERT®

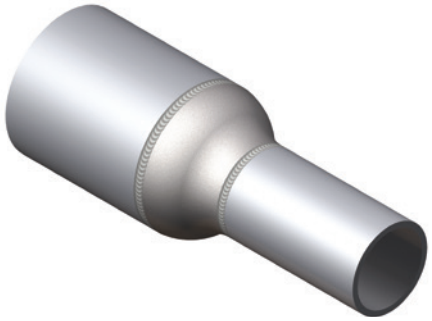

TYPE WWCR-V-AA

Welded Reducing Coupler

Reducing coupler for joining aluminum pipe of different diameters. Designed to be corona free for 500 kV service. Provides maximum structural reinforcement at the joint as well as neat and corona free installation. Pipe is easily aligned and held during welding.

Material

Aluminum Alloy

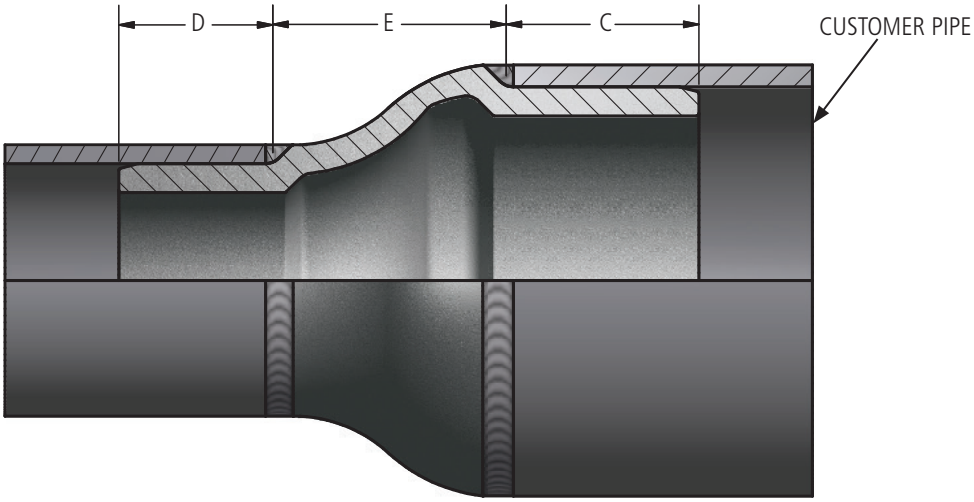

Ordering Information

CATALOG NUMBER	SPS		DIMENSIONS IN INCHES		
	RUN	REDUCED	C	D	E
WWCR400-300-V-AA	4	3	2 1/4	2	1 5/16
WWCR400-350-V-AA	4	3 1/2	2 1/4	2	1
WWCR500-250-V-AA	5	2 1/2	2 1/2	2	3
WWCR500-300-V-AA	5	3	2 1/2	2	3
WWCR500-350-V-AA	5	3 1/2	2 1/2	2	1 13/16
WWCR500-400-V-AA	5	4	2 1/2	2 1/4	1 3/8
WWCR500E-400E-V-AA	5 SCH80	4 SCH80	2 3/4	2 1/4	2 1/8
WWCR600-300-V-AA	6	3	3	2	2 1/2
WWCR600-350-V-AA	6	3 1/2	3	2	2 1/2
WWCR600-400-V-AA	6	4	3	2 1/4	2 3/4
WWCR600-500-V-AA	6	5	3	2 1/2	2 1/2
WWCR800R-400-V-AA	8 OD	4	4	3	3 5/16
WWCR800-500-V-AA	8	5	4	3	3

© 2011, AFL, all rights reserved. PP-3-00578, Revision 3, 7.20.2020
Specifications are subject to change without notice.

DOSSERT®

TYPE XWWC-V-AA, XWWC-HV-AA

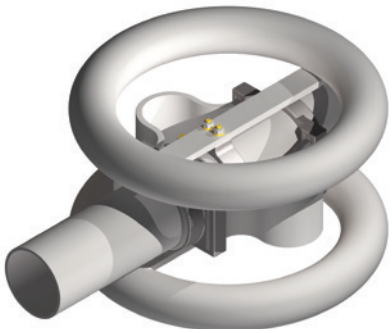

Expansion Coupler

Expansion coupler for aluminum pipe connections. Provided with alignment guide for field weld.

Material

Aluminum Alloy

Hardware

Aluminum bolts, nuts, and lockwashers.

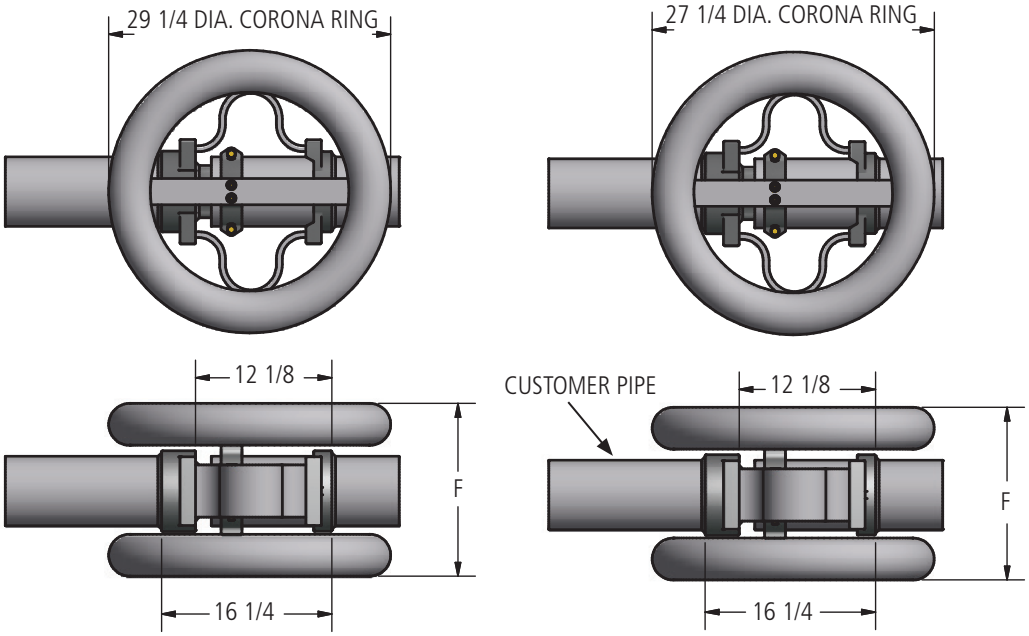

XWWC-V-AA
345 kV

XWWC-HV-AA
500 kV

Ordering Information

CATALOG NUMBER				SPS / EPHS	DIMENSIONS IN INCHES
345 kV		500 kV			
SCHEDULE 40	SCHEDULE 80	SCHEDULE 40	SCHEDULE 80		F
XWWC250-V-AA	XWWC250E-V-AA	XWWC250-HV-AA	XWWC250E-HV-AA	2 1/2	10 1/4
XWWC300-V-AA	XWWC300E-V-AA	XWWC300-HV-AA	XWWC300E-HV-AA	3	11 1/4
XWWC400-V-AA	XWWC400E-V-AA	XWWC400-HV-AA	XWWC400E-HV-AA	4	12 1/8
XWWC500-V-AA	XWWC500E-V-AA	XWWC500-HV-AA	XWWC500E-HV-AA	5	13 1/8
XWWC600-V-AA	XWWC600E-V-AA	XWWC600-HV-AA	XWWC600E-HV-AA	6	14 1/4
XWWC800-V-AA	XWWC800E-V-AA	XWWC800-HV-AA	XWWC800E-HV-AA	8	15 1/4

© 2011, AFL, all rights reserved. PP-3-00602, Revision 0, 3.3.11
Specifications are subject to change without notice.

DOSSERT®
TYPE XWWCT-HV-AA

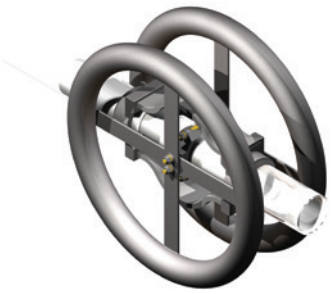

Expansion Coupler

Expansion coupler for aluminum pipe connections. Part is designed to be corona free from 345 kV to 500 kV. Provided with alignment guide for field weld.

Material

Aluminum Alloy

Hardware

Aluminum bolts, nuts, and lockwashers.

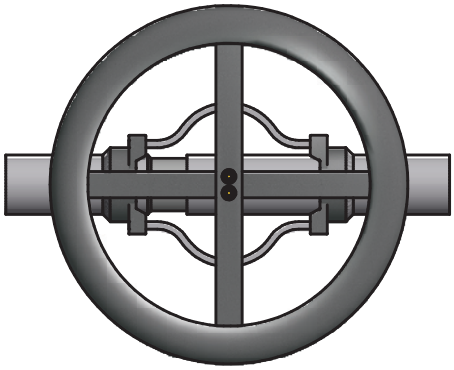

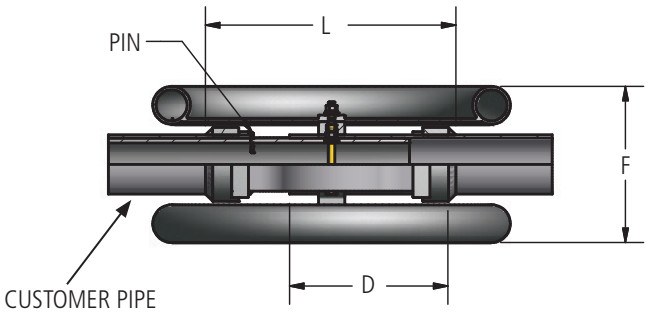

Ordering Information

CATALOG NUMBER		SPS / EPHS	DIMENSIONS IN INCHES		
SCHEDULE 40	SCHEDULE 80		D	F	L
XWWCT200-HV-AA	XWWCT200E-HV-AA	2	10 1/4	6	17 3/8
XWWCT250-HV-AA	XWWCT250E-HV-AA	2 1/2	10 1/4	6	17 1/2
XWWCT300-HV-AA	XWWCT300E-HV-AA	3	11 1/4	6	17 1/2
XWWCT350-HV-AA	XWWCT350E-HV-AA	3 1/2	11 1/4	6	17 1/2
XWWCT400-HV-AA	XWWCT400E-HV-AA	4	12 1/8	7	18
XWWCT500-HV-AA	XWWCT500E-HV-AA	5	13 1/8	7	18
XWWCT600-HV-AA	XWWCT600E-HV-AA	6	14 1/4	7	18
XWWCT800-HV-AA	XWWCT800E-HV-AA	8	18	7	18

© 2011, AFL, all rights reserved. PP-3-00601, Revision 0, 3.3.11
Specifications are subject to change without notice.

DOSSERT®

TYPE WRP3C-8-V-AA

Welded Terminal to Three NEMA Pads

Pipe ending going to three NEMA pads. Part is designed to be corona free for 345 kV and 500 kV service.

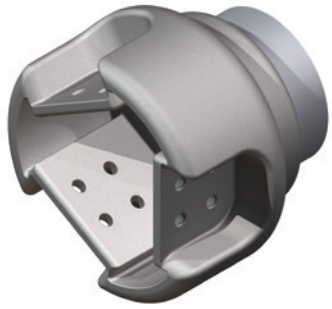

Material

Aluminum Alloy

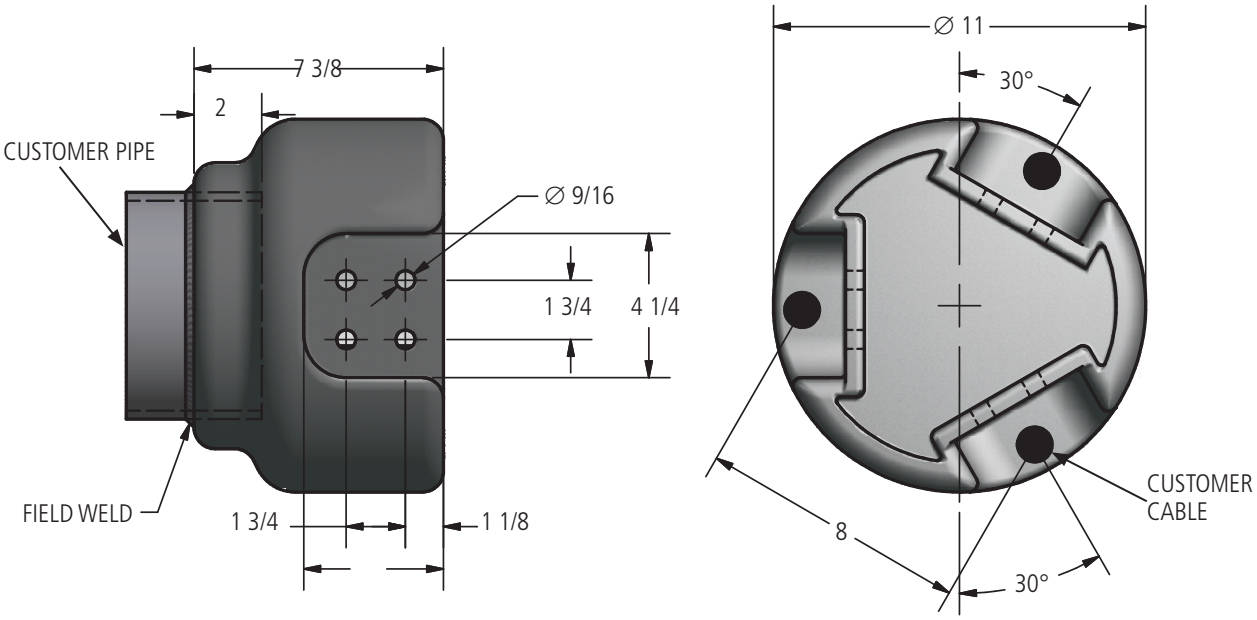

Ordering Information

CATALOG NUMBER	SPS
WRP3C350-8-V-AA	3 1/2
WRP3C400-8-V-AA	4
WRP3C500-8-V-AA	5
WRP3C600-8-V-AA	6
WRP3C800R-8-V-AA	8 OD

© 2011, AFL, all rights reserved. PP-3-00544, Revision 0, 3.3.11
Specifications are subject to change without notice.

DOSSERT®

TYPE 35300 EHV

Welded Expansion Coupler (Tube)

Expansion coupler is designed to be corona free for 500 kV service. Rope lay expansion provides for 2.6" of expansion or contraction.



Material

Aluminum Alloy

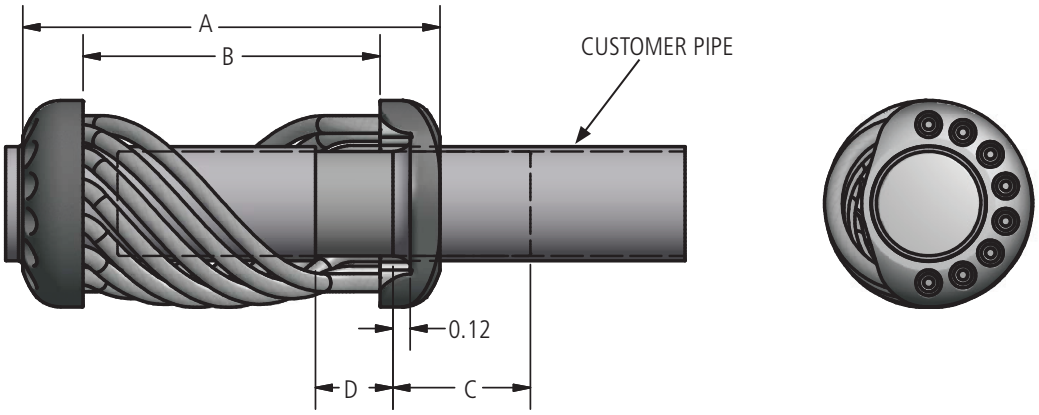

Ordering Information

CATALOG NUMBER	CONDUCTOR SIZE	DIMENSIONS IN INCHES				NOMINAL WEIGHT LBS
	SPS & EPHS	A	B	C	D	
35308 EHV	3 SPS	21.38	15.38	6.56	3.25	30.3
35328 EHV	3 EHPS	21.38	15.38	6.56	3.25	31.1
35309 EHV	3 1/2 SPS	21.38	15.38	6.81	3.25	29.3
35329 EHV	3 1/2 EHPS	21.38	15.38	6.81	3.25	30.6
35310 EHV	4 SPS	21.38	15.38	7.25	3.25	30.0
35330 EHV	4 EHPS	21.38	15.38	7.25	3.25	32.0
35312 EHV	5 SPS	22.00	15.00	8.00	3.25	35.3
35332 EHV	5 EHPS	22.00	15.00	8.00	3.25	38.7
35313 EHV	6 SPS	24.25	17.25	8.88	3.25	45.0
35333 EHV	6 EHPS	24.25	17.25	8.88	3.25	49.4

© 2011, AFL, all rights reserved. PP-3-00193, Revision 0, 3.3.11
Specifications are subject to change without notice.

DOSSERT®

TYPE 1705-EHV, 1706-EHV

Internal and External Vibration Damper

Internal and external damper is designed to be corona free (see chart below for voltage ratings). Internal damper is designed to be welded inside bus, to be corona free, and to present a "clean" appearance to the substation. External damper is to be bolted to outside of tube. External damper can be installed during construction or at a later time to correct vibration problems not originally anticipated.

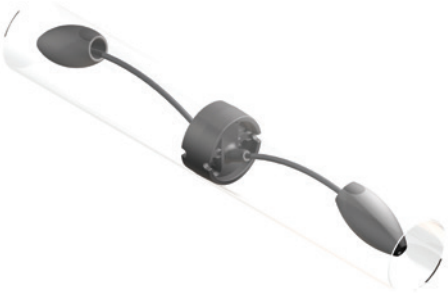

1705-EHV

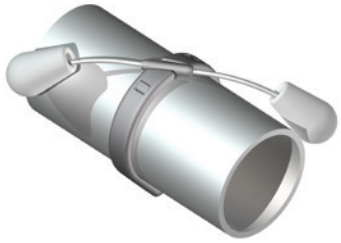

1706-EHV

Material

Aluminum Alloy

Hardware

Aluminum nuts, bolts, and lockwashers.

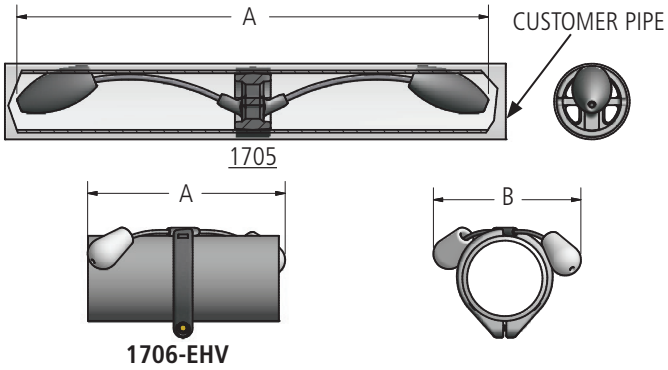

1706-EHV

Ordering Information

INTERNAL DAMPER				
CATALOG NUMBER	CONDUCTOR SIZE	DIMENSIONS IN INCHES	NOMINAL WEIGHT IN LBS	
		A	ALUMINUM	TOTAL
1705-504	5 SPS	36.88	2.7	13.3
1705-576	6 EHPS	35.25	3.3	14.0
1705-607	6 SPS	35.25	4.0	14.7
1705-762	8 EHPS	36.88	3.3	13.9
1705-798	8 SPS	36.88	3.4	14.0
1705-700	8" OD x 1/2 WALL	36.88	3.2	13.8
1705-725	8" OD x 3/8 WALL	36.88	3.2	13.8

EXTERNAL DAMPER						
CATALOG NUMBER	VOLTAGE RATING	CONDUCTOR SIZE SPS & EHPS	DIMENSIONS IN INCHES		NOMINAL WEIGHT IN LBS	
			A	B	ALUMINUM	TOTAL
1706-008 EHV	345 kV	3	28.0	12.6	1.9	15.6
1706-009 EHV	345 kV	3 1/2	27.8	13.2	2.0	15.7
1706-010 EHV	345 kV	4	27.6	13.6	2.1	15.8
1706-012 EHV	345 kV	5	26.8	15.4	2.5	16.2
1706-013 EHV	345 kV	6	26.2	17.8	2.7	16.4
1706-014 EHV	500 kV	8" OD	24.8	18.6	3.9	17.6

© 2011, AFL, all rights reserved. PP-3-00163, Revision 3, 8.12.15
Specifications are subject to change without notice.

DOSSERT®

TYPE CXBHV-AA, CXWHV-AA

Bolted Corona Ball



Bolted and welded corona bell is designed to be corona free for 345 kV and 500 kV service.

Material

Aluminum Alloy

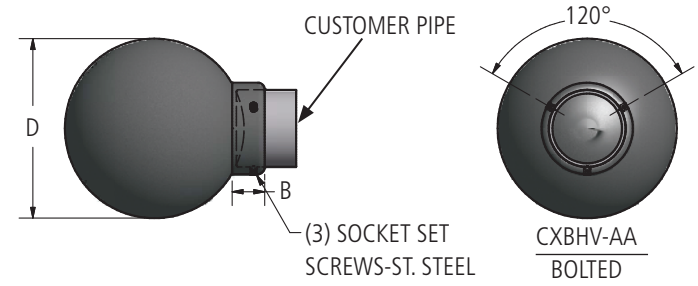

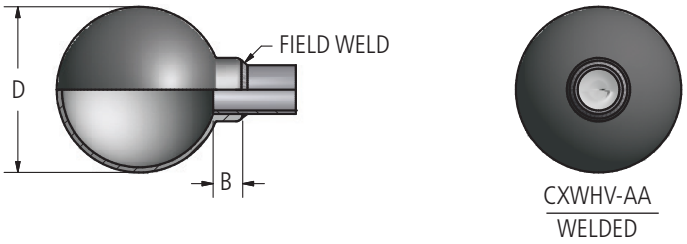

Ordering Information

CATALOG NUMBER		SPS	DIMENSIONS IN INCHES	
BOLTED	WELDED		B	D
CXBHV250-AA	CXWHV250-AA	2 1/2	2 1/16	10
CXBHV300-AA	CXWHV300-AA	3	2 1/16	13
CXBHV350-AA	CXWHV350-AA	3 1/2	2 1/16	13
CXBHV400-AA	CXWHV400-AA	4	2 1/16	13
CXBHV500-AA	CXWHV500-AA	5	2 7/16	13
CXBHV600-AA	CXWHV600-AA	6	2 7/8	13
CXBHV800-AA	CXWHV800-AA	8	3 3/4	14
CXBHV800R-AA	CXWHV800R-AA	8 OD	3 5/16	13

© 2011, AFL, all rights reserved. PP-3-00301, Revision 2, 11.27.17
Specifications are subject to change without notice.

DOSSERT®

TYPE BAP-V-AA

Bolted Tee for Pipe

Bolted tee connector is designed to be corona free for 345 kV and 500 kV service.

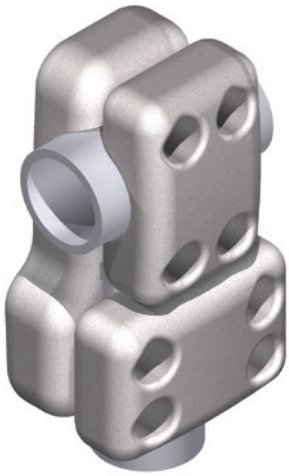

Material

Aluminum Alloy

Hardware

Aluminum nuts, bolts, and lockwashers.

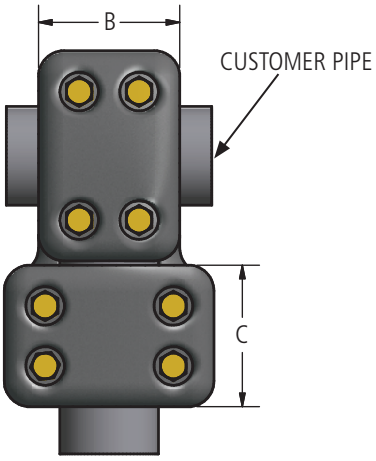



Ordering Information

CATALOG NUMBER	SPS		DIMENSIONS IN INCHES			BOLT SIZE
	RUN	TAP	B	C	L	
BAP250-250-V-AA	2 1/2	2 1/2	4 1/8	4 1/8	10	1/2
BAP300-300-V-AA	3	3	5	5	12 1/2	5/8
BAP300-600-V-AA	3	6	5	6 1/4	13 13/16	5/8
BAP400-200-V-AA	4	2	4 1/8	4 1/2	11 5/8	1/2
BAP400-300-V-AA	4	3	6	5	13 7/8	5/8
BAP400-400-V-AA	4	4	6	6	21 1/2	5/8
BAP500-300-V-AA	5	3	5 3/4	5	15 1/2	5/8
BAP500-400-V-AA	5	4	5 3/4	6	15 5/8	5/8
BAP500-500-V-AA	5	5	7	7	17	5/8
BAP600-300-V-AA	6	3	6	5	15 3/4	5/8
BAP800R-400-V-AA	8 OD	4	6	5 1/4	15 5/8	5/8
BAP800-600-V-AA	8	6	7 1/2	7	17 3/4	5/8

© 2011, AFL, all rights reserved. PP-3-00240, Revision 1, 2.1.19
Specifications are subject to change without notice.

DOSSERT®

TYPE PFTS-N-V-AA

Bolted Pipe Tee to Four-Hole Pad



A clamp type tee connector for joining a bus to a tubular bus main. Special bearing surfaces insure maximum contact efficiency. Designed for 345 kV and 500 kV service.

Material

Aluminum Alloy

Hardware

Yellow anodized aluminum nuts, bolts, and lockwashers.

Notes

- For Terminal Pad Hardware Shield, add "-CSBV" to catalog number.
  EX: PFTS250-4N4-V-AA-CSBV
- For Grade Five Galvanized Steel Hardware, add "-GS5" to catalog number.
  EX: PFTS600-4N4-V-AA-GS5
- For Stainless Steel bolts, lockwashers and Everdur nuts, add "-SSHB" to catalog number.
  EX: PFTS600-4N4-V-AA-SSHBN

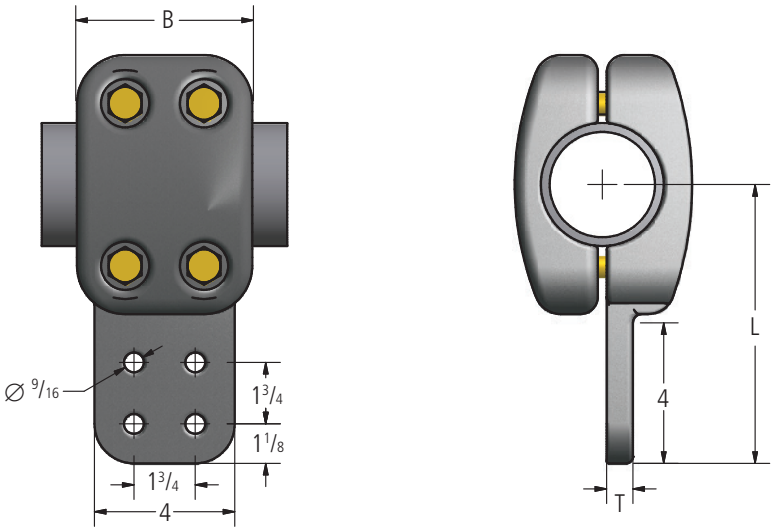

FIG. 1

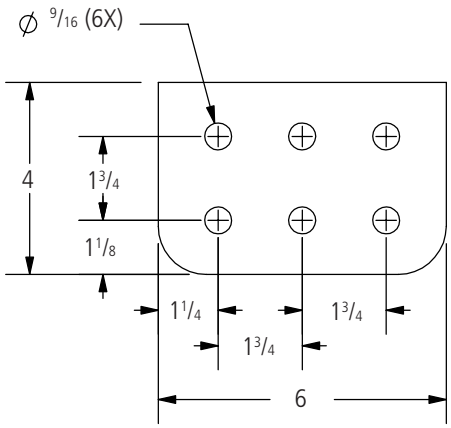

FIG. 2

© 2011, AFL, all rights reserved. PP-3-00396, Revision 2, 12.18.18
Specifications are subject to change without notice.

DOSSERT®

TYPE PFTS-N-V-AA

Bolted Pipe Tee to Four-Hole Pad

Ordering Information

CATALOG NUMBER	SPS	FIG. NO.	DIMENSIONS IN INCHES			BOLT SIZE
			B	L	T	
PFTS250-4N4-V-AA	2 1/2	1	4.13	7.31	0.75	1/2
PFTS300-4N4-V-AA	3	1	5.00	7.94	0.75	5/8
PFTS350-4N4-V-AA	3 1/2	1	4.88	8.00	0.88	5/8
PFTS400-4N4-V-AA	4	1	6.00	8.50	0.88	5/8
PFTS500-4N4-V-AA	5	1	5.75	9.31	1.00	5/8
PFTS500-6N4-V-AA	5	2	5.75	9.38	1.00	5/8
PFTS600-4N4-V-AA	6	1	5.00	9.44	1.00	5/8
PFTS600-6N4-V-AA	6	2	5.00	9.44	1.00	5/8

© 2011, AFL, all rights reserved. PP-3-00396, Revision 2, 12.18.18
Specifications are subject to change without notice.

DOSSERT®
TYPE BPA-75-V-AA

75-Degree Bolted Tee

Bolted tee connector at 75° is designed to be corona free for 345 kV and 525 kV service.

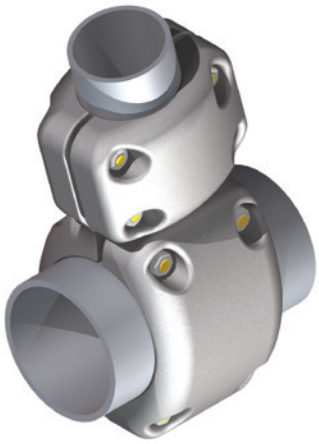

Material

Aluminum Alloy

Hardware

Yellow anodized aluminum nuts, bolts, and lockwashers.

Notes

- For Stainless Steel bolt, lockwasher and Everdur nut, add "-SSHBN" to catalog number.
  EX: BPA200-200-75-V-AA-SSHBN

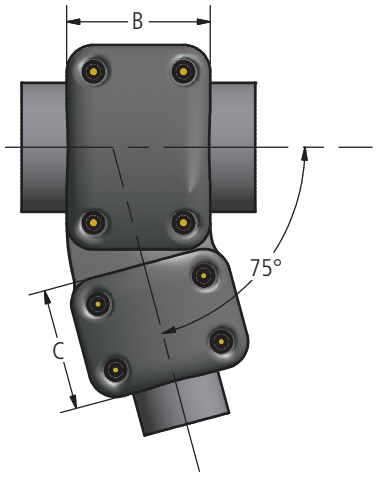



Ordering Information

CATALOG NUMBER	PIPE SIZE		DIMENSIONS IN INCHES	
	RUN	TAP	B	C
BPA200-200-75-V-AA	2	2	5	5
BPA250-125-75-V-AA	2 1/2	1 1/4	4 1/8	4 1/8
BPA250-250-75-V-AA	2 1/2	2 1/2	4 1/8	4 1/8
BPA300-300-75-V-AA	3	3	5	5
BPA400-200-75-V-AA	4	2	6	5
BPA400-400-75-V-AA	4	4	6	6
BPA500-300-75-V-AA	5	3	5 3/4	5
BPA500-400-75-V-AA	5	4	5 3/4	6
BPA600-300-75-V-AA	6	3	5	5
BPA600-350-75-V-AA	6	3 1/2	5	4 7/8
BPA800R-500-75-V-AA	8 OD	5	6	5 3/4
BPA800-300-75-V-AA	8	3	4 3/4	5

© 2011, AFL, all rights reserved. PP-3-00251, Revision 1, 9.20.18
Specifications are subject to change without notice.

DOSSERT®

TYPE WT-AA, WTA-75-AA, WTA-80-AA

Welded Tee Rated for 500 kV

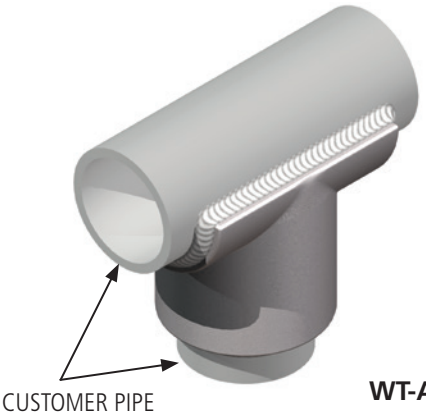

WT-AA

Material

Aluminum Alloy

Notes

1. For a welded tee at 75° for 1" to 1" pipe order: WTA100-100-75-AA
2. For a welded tee at 80° for 1" to 1" pipe order: WTA100-100-80-AA

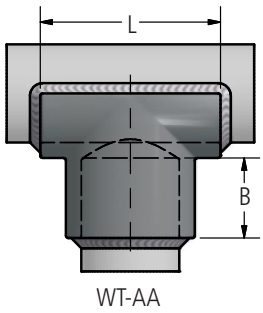

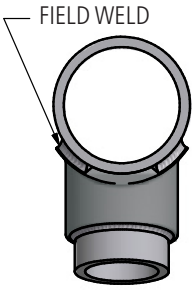

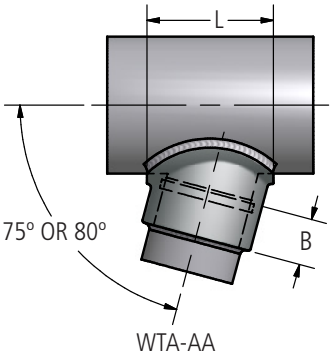



WTA-AA

Ordering Information

SPS		CATALOG NUMBER			DIMENSIONS IN INCHES	
RUN	TAP OR BRANCH	90 DEGREE	75 DEGREE	80 DEGREE	B	L
3/4	3/4	WT75-75-AA	WTA75-75-75-AA	WTA75-75-75-80-AA	3/4	2 1/8
1	3/4	WT100-75-AA	WTA100-75-75-AA	WTA100-75-80-AA	3/4	2 1/8
1	1	WT100-100-AA	WTA100-100-75-AA	WTA100-100-80-AA	3/4	2 1/4
1 1/4	3/4	WT125-75-AA	WTA125-75-75-AA	WTA125-75-80-AA	3/4	2 1/8
1 1/4	1	WT125-100-AA	WTA125-100-75-AA	WTA125-100-80-AA	3/4	2 1/4
1 1/4	1 1/4	WT125-125-AA	WTA125-125-75-AA	WTA125-125-80-AA	1	2 3/4
1 1/4	2 1/2	WT125-250-AA	WTA125-250-75-AA	WTA125-250-80-AA	1 1/2	3 1/2
1 1/2	3/4	WT150-75-AA	WTA150-75-75-AA	WTA150-75-80-AA	3/4	2 1/8
1 1/2	1	WT150-100-AA	WTA150-100-75-AA	WTA150-100-80-AA	3/4	2 1/4
1 1/2	1 1/4	WT150-125-AA	WTA150-125-75-AA	WTA150-125-80-AA	1	2 1/2
1 1/2	1 1/2	WT150-150-AA	WTA150-150-75-AA	WTA150-150-80-AA	1	3 1/8
1 1/2	2	WT150-200-AA	WTA150-200-75-AA	WTA150-200-80-AA	1 1/4	3 11/16
2	3/4	WT200-75-AA	WTA200-75-75AA	WTA200-75-80-AA	3/4	2 1/8
2	1	WT200-100-AA	WTA200-100-75-AA	WTA200-100-80-AA	7/8	2 1/4
2	1 1/4	WT200-125-AA	WTA200-125-75-AA	WTA200-125-80-AA	1 1/4	2 11/16
2	1 1/2	WT200-150-AA	WTA200-150-75-AA	WTA200-150-80-AA	1	2 3/4
2	2	WT200-200-AA	WTA200-200-75-AA	WTA200-200-80-AA	1 1/4	3 11/16
2	2 1/2	WT200-250-AA	WTA200-250-75-AA	WTA200-250-80-AA	1 1/2	4 1/8
2	3	WT200-300-AA	WTA200-300-75-AA	WTA200-300-80-AA	1 3/4	4 3/8

© 2011, AFL, all rights reserved. PP-3-00549, Revision 3, 10.17.2022
Specifications are subject to change without notice.

DOSSERT®

TYPE WT-AA, WTA-75-AA, WTA-80-AA (cont.)

Welded Tee Rated for 500 kV

Ordering Information

SPS		CATALOG NUMBER			DIMENSIONS IN INCHES	
RUN	TAP OR BRANCH	90 DEGREE	75 DEGREE	80 DEGREE	B	L
2	4	WT200-400-AA	WTA200-400-75-AA	WTA200-400-80-AA	2 1/4	5 1/2
2	5	WT200-500-AA	WTA200-500-75-AA	WTA200-500-80-AA	2 3/4	6 7/16
2	6	WT200-600-AA	WTA200-600-75-AA	WTA200-600-80-AA	3 1/4	8 1/4
2 1/2	3/4	WT250-75-AA	WTA250-75-75-AA	WTA250-75-80-AA	3/4	2 5/8
2 1/2	1	WT250-100-AA	WTA250-100-75-AA	WTA250-100-80-AA	3/4	2 1/8
2 1/2	1 1/4	WT250-125-AA	WTA250-125-75-AA	WTA250-125-80-AA	1	3 1/8
2 1/2	1 1/2	WT250-150-AA	WTA250-150-75-AA	WTA250-150-80-AA	1	3 1/8
2 1/2	2	WT250-200-AA	WTA250-200-75-AA	WTA250-200-80-AA	1 1/4	3 11/16
2 1/2	2 1/2	WT250-250-AA	WTA250-250-75-AA	WTA250-250-80-AA	1 1/2	3 3/4
3	3/4	WT300-75-AA	WTA300-75-75-AA	WTA300-75-80-AA	3/4	2 1/8
3	1	WT300-100-AA	WTA300-100-75-AA	WTA300-100-80-AA	3/4	2 1/8
3	1 1/4	WT300-125-AA	WTA300-125-75-AA	WTA300-125-80-AA	1	2 1/2
3	1 1/2	WT300-150-AA	WTA300-150-75-AA	WTA300-150-80-AA	1	2 3/4
3	2	WT300-200-AA	WTA300-200-75-AA	WTA300-200-80-AA	1 1/4	3 1/4
3	2 1/2	WT300-250 -AA	WTA300-250-75-AA	WTA300-250-80-AA	1 1/2	3 3/4
3	3	WT300-300 -AA	WTA300-300-75-AA	WTA300-300-80-AA	1 3/4	4 3/8
3	3 1/2	WT300-350-AA	WTA300-350-75-AA	WTA300-350-80-AA	2	4 7/8
3	4	WT300-400-AA	WTA300-400-75-AA	WTA300-400-80-AA	2 1/4	5 3/8
3	5	WT300-500-AA	WTA300-500-75-AA	WTA300-500-80-AA	2 3/4	6 7/16
3 1/2	3/4	WT350-75-AA	WTA350-75-75-AA	WTA350-75-80-AA	3/4	2 1/8
3 1/2	1	WT350-100-AA	WTA350-100-75-AA	WTA350-100-80-AA	3/4	2 1/4
3 1/2	1 1/4	WT350-125-AA	WTA350-125-75-AA	WTA350-125-80-AA	1	2 1/2
3 1/2	1 1/2	WT350-150-AA	WTA350-150-75-AA	WTA350-150-80-AA	1	2 3/4
3 1/2	2	WT350-200-AA	WTA350-200-75-AA	WTA350-200-80-AA	1 1/4	3 7/8
3 1/2	2 1/2	WT350-250-AA	WTA350-250-75-AA	WTA350-250-80-AA	1 1/2	3 3/4
3 1/2	3	WT350-300-AA	WTA350-300-75-AA	WTA350-300-80-AA	1 3/4	4 7/8
3 1/2	3 1/2	WT350-350-AA	WTA350-350-75-AA	WTA350-350-80-AA	2	5 3/8
4	3/4	WT400-75-AA	WTA400-75-75-AA	WTA400-75-80-AA	3/4	2 1/8
4	1	WT400-100-AA	WTA400-100-75-AA	WTA400-100-80-AA	7/8	3 1/8
4	1 1/4	WT400-125-AA	WTA400-125-75-AA	WTA400-125-80-AA	1	2 1/2
4	1 1/2	WT400-150-AA	WTA400-150-75-AA	WTA400-150-80-AA	1	3 1/8
4	2	WT400-200-AA	WTA400-200-75-AA	WTA400-200-80-AA	2	4 3/8
4	2 1/2	WT400-250-AA	WTA400-250-75-AA	WTA400-250-80-AA	1 1/2	4 1/4
4	3	WT400-300-AA	WTA400-300-75-AA	WTA400-300-80-AA	1 3/4	4 7/8
4	3 1/2	WT400-350-AA	WTA400-350-75-AA	WTA400-350-80-AA	2	5 1/2
4	4	WT400-400-AA	WTA400-400-75-AA	WTA400-400-80-AA	2 1/4	6 1/8

© 2011, AFL, all rights reserved. PP-3-00549, Revision 3, 10.17.2022
Specifications are subject to change without notice.

DOSSERT®

TYPE WT-AA, WTA-75-AA, WTA-80-AA (cont.)

Welded Tee Rated for 500 kV

Ordering Information

SPS		CATALOG NUMBER			DIMENSIONS IN INCHES	
RUN	TAP OR BRANCH	90 DEGREE	75 DEGREE	80 DEGREE	B	L
5	1	WT500-100-AA	WTA500-100-75-AA	WTA500-100-80-AA	3/4	2 1/4
5	1 1/4	WT500-125-AA	WTA500-125-75-AA	WTA500-125-80-AA	1	2 1/2
5	1 1/2	WT500-150-AA	WTA500-150-75-AA	WTA500-150-80-AA	1	2 3/4
5	2	WT500-200-AA	WTA500-200-75-AA	WTA500-200-80-AA	1 1/4	3 1/4
5	2 1/2	WT500-250-AA	WTA500-250-75-AA	WTA500-250-80-AA	1 1/2	3 3/4
5	3	WT500-300-AA	WTA500-300-75-AA	WTA500-300-80-AA	1 3/4	4 7/8
5	3 1/2	WT500-350-AA	WTA500-350-75-AA	WTA500-350-80-AA	2	5 13/16
5	4	WT500-400-AA	WTA500-400-75-AA	WTA500-400-80-AA	2 1/4	5 15/16
5	5	WT500-500-AA	WTA500-500-75-AA	WTA500-500-80-AA	2 3/4	7 1/16
6	1	WT600-100-AA	WTA600-100-75-AA	WTA600-100-80-AA	3/4	2 1/4
6	1 1/4	WT600-125-AA	WTA600-125-75-AA	WTA600-125-80-AA	1	2 1/2
6	1 1/2	WT600-150-AA	WTA600-150-75-AA	WTA600-150-80-AA	1	2 3/4
6	2	WT600-200-AA	WTA600-200-75-AA	WTA600-200-80-AA	1 1/4	3 1/4
6	2 1/2	WT600-250-AA	WTA600-250-75-AA	WTA600-250-80-AA	1 1/2	3 3/4
6	3	WT600-300-AA	WTA600-300-75-AA	WTA600-300-80-AA	1 3/4	4 11/16
6	3 1/2	WT600-350-AA	WTA600-350-75-AA	WTA600-350-80-AA	2	5 3/8
6	4	WT600-400-AA	WTA600-400-75-AA	WTA600-400-80-AA	2 1/4	5 15/16
6	5	WT600-500-AA	WTA600-500-75-AA	WTA600-500-80-AA	2 3/4	6 7/16
6	6	WT600-600-AA	WTA600-600-75-AA	WTA600-600-80-AA	2 3/4	8 1/4
8	6	WT800-600-AA	WTA800-600-75-AA	WTA800-600-80-AA	2 3/4	8 1/2
8	4	WT800R-400-AA	WTA800R-400-75-AA	WTA800R-400-80-AA	2 1/4	5 15/16
8	5	WT800R-500-AA	WTA800R-500-75-AA	WTA800R-500-80-AA	2 3/4	6 7/16
8	8" O.D.	WT800R-800R-AA	WTA800R-800R-75-AA	WTA800R-800R-80-AA	2 3/4	10

© 2011, AFL, all rights reserved. PP-3-00549, Revision 3, 10.17.2022
Specifications are subject to change without notice.

DOSSERT®

TYPE WTC-V-AA, WTF-V-AA

Pipe Tap

Tee taps are designed to be corona free for 345 kV and 500 kV operation when pad covers are used to shield terminal hardware.

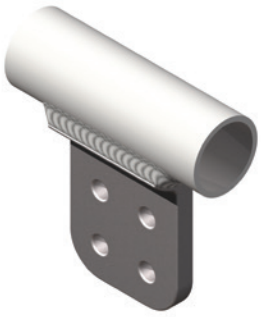

WTC-V-AA

Material

Aluminum Alloy

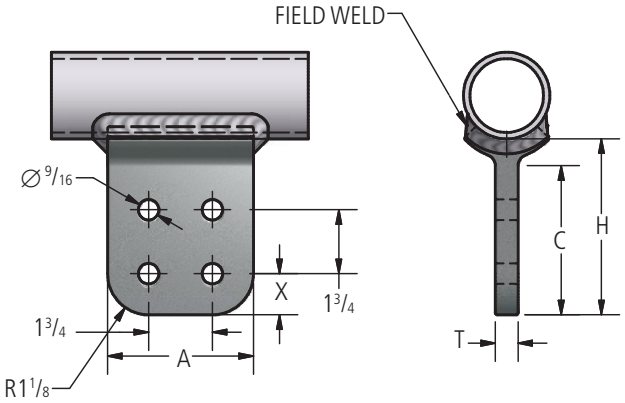

FIG. 1 WTC-V-AA



WTF-V-AA

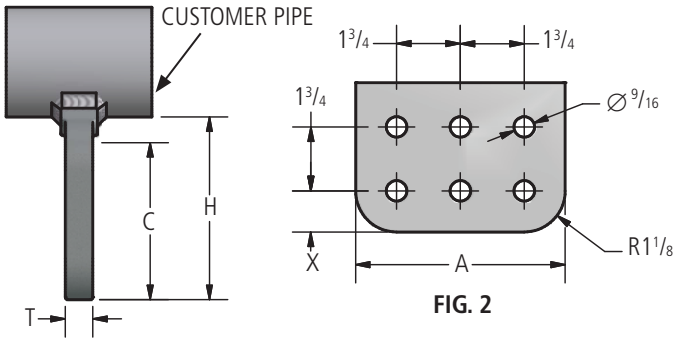

FIG. 2 WTF-V-AA

Ordering Information

CATALOG NUMBER		SPS RANGE	FIG. NO.	DIMENSIONS IN INCHES				
IN-LINE	90 DEGREES			A	C	H	T	X
WTC250-4N-V-AA	WTF250-4N-V-AA	1 THRU 2 1/2	1	3	3 1/4	3 7/8	1/2	5/8
WTC250-4N4-V-AA	WTF250-4N4-V-AA	1 THRU 2 1/2	1	4	4 1/4	4 7/8	5/8	1 1/8
WTC600-4N-V-AA	WTF600-4N-V-AA	3 THRU 6	1	3	3 1/4	4	3/4	5/8
WTC600-4N4-V-AA	WTF600-4N4-V-AA	3 THRU 6	1	4	4 1/4	5	3/4	1 1/8
WTC600-6N4-V-AA	WTF600-6N4-V-AA	3 THRU 6	2	6	4 1/4	5	3/4	1 1/8
WTC800R-4N4-V-AA	WTF800R-4N4-V-AA	8" O.D.	1	4	4 1/4	5	3/4	1 1/8
WTC800-4N4-V-AA	WTF800-4N4-V-AA	8	1	4	4 1/4	5	3/4	1 1/8

© 2011, AFL, all rights reserved. PP-3-00551, Revision 1, 11.12.13
Specifications are subject to change without notice.

DOSSERT®

TYPE WVBP-20-V-AA, WVBP-30-V-AA

Angle Welded Vee and Welded Tee Connector

Welded A-frame connectors are designed to be corona free for 345 kV and 500 kV service. Connectors are designed to be welded on outside of pipe allowing use on both schedule 40 and schedule 80 pipe. Socket design allows for slight inaccuracies in field cut length of pipe.

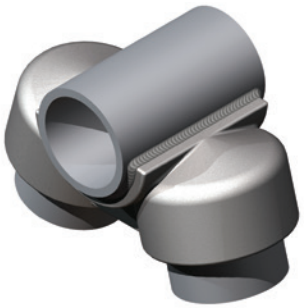

WVBP-20-V-AA

Material

Aluminum Alloy

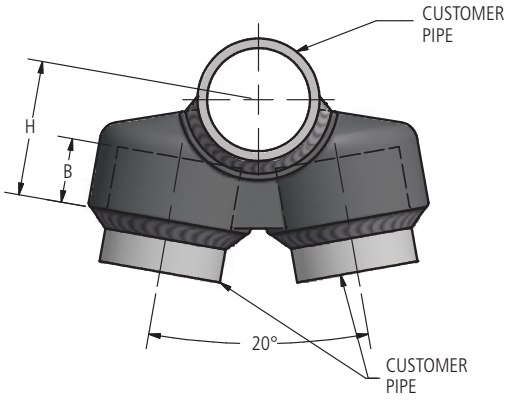

WVBP-20-V-AA

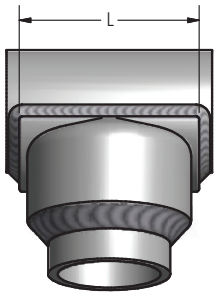

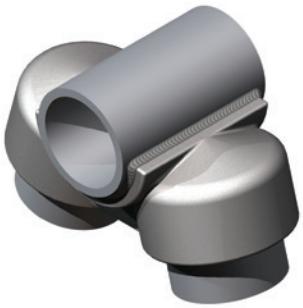

WVBP-20-V-AA

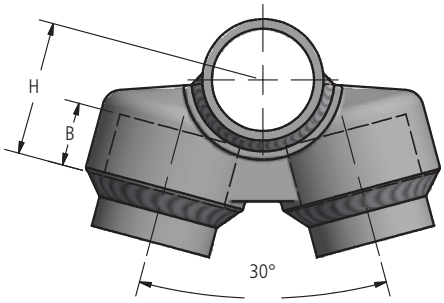

WVBP-30-V-AA

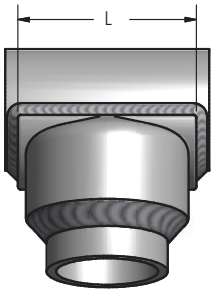

© 2011, AFL, all rights reserved. PP-3-00574, Revision 1, 9.28.11
Specifications are subject to change without notice.

DOSSERT®

TYPE WVBP-20-V-AA, WVBP-30-V-AA

Angle Welded Vee and Welded Tee Connector

Ordering Information

CATALOG NUMBER		SPS		DIMENSIONS IN INCHES		
20 DEGREE	30 DEGREE	RUN	TAP	B	H	L
WVBP300-125-20-V-AA	WVBP300-125-30-V-AA	3	1-1/4	1	2-15/16	2-5/8
WVBP300-150-20-V-AA	WVBP300-150-30-V-AA	3	1-1/2	1	2-15/16	2-7/8
WVBP300-200-20-V-AA	WVBP300-200-30-V-AA	3	2	1-1/4	3-3/16	3-1/2
WVBP300-250-20-V-AA	WVBP300-250-30-V-AA	3	2-1/2	1-1/2	3-7/16	4
WVBP300-300-20-V-AA	WVBP300-300-30-V-AA	3	3	1-3/4	3-11/16	4-5/8
WVBP350-100-20-V-AA	WVBP350-100-30-V-AA	3-1/2	1	3/4	2-5/8	2-1/4
WVBP350-150-20-V-AA	WVBP350-150-30-V-AA	3-1/2	1-1/2	1	3-1/4	2-7/8
WVBP350-200-20-V-AA	WVBP350-200-30-V-AA	3-1/2	2	1-1/4	3-1/2	3-1/2
WVBP350-250-20-V-AA	WVBP350-250-30-V-AA	3-1/2	2-1/2	1-1/2	3-3/4	4
WVBP350-300-20-V-AA	WVBP350-300-30-V-AA	3-1/2	3	1-3/4	4	4-5/8
WVBP350-350-20-V-AA	WVBP350-350-30-V-AA	3-1/2	3-1/2	2	4-1/4	5-1/8
WVBP400-150-20-V-AA	WVBP400-150-30-V-AA	4	1-1/2	1	3-1/2	2-7/8
WVBP400-200-20-V-AA	WVBP400-200-30-V-AA	4	2	1-1/4	3-3/4	3-1/2
WVBP400-250-20-V-AA	WVBP400-250-30-V-AA	4	2-1/2	1-1/2	4	4
WVBP400-300-20-V-AA	WVBP400-300-30-V-AA	4	3	1-3/4	4-1/4	4-5/8
WVBP400-350-20-V-AA	WVBP400-350-30-V-AA	4	3-1/2	2	4-1/2	5-1/8
WVBP400-400-20-V-AA	WVBP400-400-30-V-AA	4	4	2-1/4	4-3/4	5-7/8
WVBP500-150-20-V-AA	WVBP500-150-30-V-AA	5	1-1/2	1	4	2-7/8
WVBP500-200-20-V-AA	WVBP500-200-30-V-AA	5	2	1-1/4	4-1/4	3-1/2
WVBP500-250-20-V-AA	WVBP500-250-30-V-AA	5	2-1/2	1-1/2	4-1/2	4
WVBP500-300-20-V-AA	WVBP500-300-30-V-AA	5	3	1-3/4	4-3/4	4-5/8
WVBP500-350-20-V-AA	WVBP500-350-30-V-AA	5	3-1/2	2	5	5-1/8
WVBP500-400-20-V-AA	WVBP500-400-30-V-AA	5	4	2-1/4	5-1/4	5-7/8
WVBP500-500-20-V-AA	WVBP500-500-30-V-AA	5	5	2-3/4	5-3/4	6-15/16
WVBP600-200-20-V-AA	WVBP600-200-30-V-AA	6	2	1-1/4	4-13/16	3-1/2
WVBP600-250-20-V-AA	WVBP600-250-30-V-AA	6	2-1/2	1-1/2	5-1/16	4
WVBP600-300-20-V-AA	WVBP600-300-30-V-AA	6	3	1-3/4	5-5/16	4-5/8
WVBP600-350-20-V-AA	WVBP600-350-30-V-AA	6	3-1/2	2	5-9/16	5-1/8
WVBP600-400-20-V-AA	WVBP600-400-30-V-AA	6	4	2-1/4	5-13/16	5-7/8
WVBP600-500-20-V-AA	WVBP600-500-30-V-AA	6	5	2-3/4	6-5/16	6-15/16
WVBP600-600-20-V-AA	WVBP600-600-30-V-AA	6	6	3-1/4	6-13/16	8

© 2011, AFL, all rights reserved. PP-3-00574, Revision 1, 9.28.11
Specifications are subject to change without notice.

DOSSERT®

TYPE BPC-V-AA

Bolted Tee, Pipe to Cable

A clamp type tee connector for joining a cable to a tubular bus main. Designed to be corona free for 345 kV and 500 kV service. Special bearing surfaces insure maximum contact efficiency.



Material

Aluminum Alloy

Hardware

Yellow anodized aluminum nuts, bolts and lockwashers.

Notes

- For stainless steel bols, lockwashers and Everdur nuts, add "-SSHBN" to catalog number.
  EX: BPC600-127-V-AA-SSHBN
- For grade five galvanized steel hardware, add "-GS5" to catalog number. EX: BPC600-127-V-AA-GS5

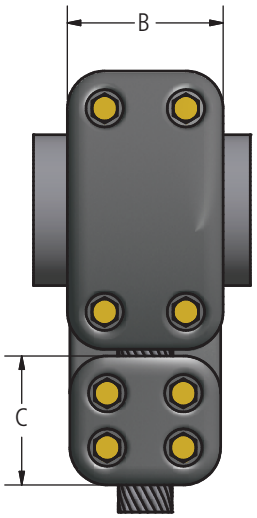

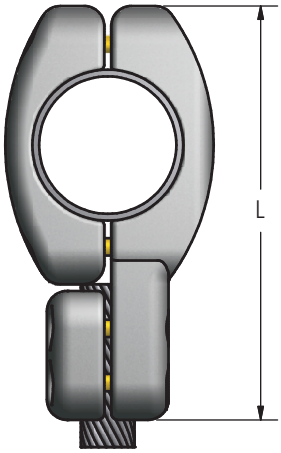

Ordering Information

CATALOG NUMBER	SPS	CABLE RANGE			DIMENSIONS IN INCHES			BOLT SIZE
		ALUMINUM		ACSR	B	C	L	
		MIN	MAX					
BPC250-79-V-AA	2 1/2	750 MCM	795 MCM	636 (18/1;24/7;26/7)	4 1/2	4 1/2	10 3/8	1/2
BPC250-95-V-AA	2 1/2	800 MCM	954 MCM	495 (47/7;24/7;26/7)	4 1/2	4 1/2	10 3/8	1/2
BPC250-127-V-AA	2 1/2	1113 MCM	1272 MCM	1113 (45/7)(54/19)	4 1/8	4 1/2	10 3/4	1/2
BPC300-95-V-AA	3	800 MCM	954 MCM	495 (47/7;24/7;26/7)	4 3/4	4 1/2	12	5/8
BPC300-160-V-AA	3	1500 MCM	1600 MCM	1431 (45/7;54/19) 1351.5 (54/19)	4 3/4	4 3/4	12	5/8
BPC350-127-V-AA	3 1/2	1113 MCM	1272 MCM	1113 (45/7)(54/19)	4 3/4	4 1/2	13	1/2
BPC350-160-V-AA	3 1/2	1500 MCM	1600 MCM	1431 (45/7;54/19) 1351.5 (54/19)	5	4 3/4	12 31/32	1/2
BPC400-127-V-AA	4	1113 MCM	1272 MCM	1113 (45/7)(54/19)	6	4 1/2	13 1/8	5/8
BPC400-180-V-AA	4	1700 MCM	1800 MCM	1590 (45/7)(54/9)	6	4 3/4	13 3/8	5/8
BPC450-200-V-AA	4.5	1900 MCM	2000 MCM	1780 (84/19) 1843.2 MCM	5	4 3/4	13 3/4	5/8
BPC500-180-V-AA	5	1700 MCM	1800 MCM	1590 (45/7)(54/9)	5 3/4	4 3/4	14 7/16	5/8
BPC500-250-V-AA	5	2400 MCM	2500 MCM	2156 (84/19)	5 3/4	4 3/4	14 7/16	5/8
BPC500-300-V-AA	5	2750 MCM	3000 MCM	2515 (76/19)	5 3/4	4 3/4	14 7/16	5/8
BPC500-350-V-AA	5	3250 MCM	3500 MCM	3015 (54/19)	5 3/4	4 3/4	14 7/16	5/8
BPC600-127-V-AA	6	1113 MCM	1272 MCM	1113 (45/7)(54/19)	5	4 1/2	14 7/8	5/8
BPC600-160-V-AA	6	1500 MCM	1600 MCM	1431 (45/7;54/19) 1351.5 (54/19)	5	4 3/4	15 3/8	5/8
BPC600-200-V-AA	6	1900 MCM	2000 MCM	1780 (84/19) & 1843.2 MCM	5	4 3/4	15 5/16	5/8
BPC600-300-V-AA	6	2750 MCM	3000 MCM	2515(76/19)	5	4 3/4	15 5/16	5/8

© 2011, AFL, all rights reserved. PP-3-00253, Revision 5, 11.3.2022
Specifications are subject to change without notice.

DOSSERT®
TYPE CFT-N-V-AA



Cable to Flat Tee Connector

Bolted tap is designed to be corona free for 345 kV and 500 kV operation when pad covers are used to shield terminal hardware.

Material

Aluminum Alloy

Hardware

Aluminum nuts, bolts and lockwashers.

Notes

- For Finished Surface on both sides of Pad, add "F" to catalog number.
  EX: CFT79-4N4F-V-AA
- For Grade Five Galvanized Steel Hardware, add "-GS5" to catalog number.
  EX: CFT79-4N4-V-AA-GS5
- For Hardware Shield, add "-CSBV" to catalog number.
  EX: CFT79-4N4-V-AA-CSBV

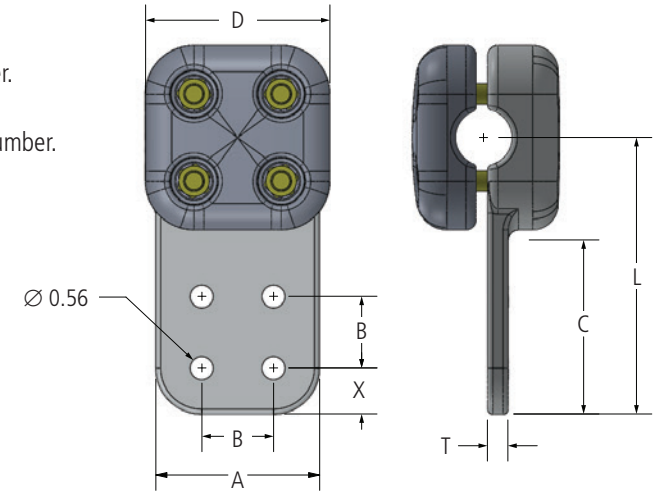

Ordering Information

CATALOG NO.	CABLE RANGE				DIMENSIONS IN INCHES						
	MIN	MAX	ACSR	DIAMETER	A	B	C	D	L	T	X
CFT79-4N4-V-AA	750 MCM	795 MCM	636 (18/1;24/7;26/7)	0.940 - 1.026	4.00	1.75	4.00	4.50	6.38	0.50	1.13
CFT95-4N4-V-AA	800 MCM	954 MCM	795 (47/7;24/7;26/7)	1.032 - 1.140	4.00	1.75	4.00	4.50	6.50	0.50	1.13
CFT103-4N-V-AA	1000 MCM	1033.5 MCM	954 (45/7) (54/7)	1.151 - 1.196	3.00	1.75	3.00	4.50	5.63	0.50	0.63
CFT103-4N4-V-AA	1000 MCM	1033.5 MCM	954 (45/7) (54/7)	1.151 - 1.196	4.00	1.75	4.00	4.50	6.63	0.50	1.13
CFT127-4N4-V-AA	1113 MCM	1272 MCM	1033.5 (54/7), 1113 (45/7) (54/19)	1.216 - 1.300	4.00	1.75	4.00	4.50	6.75	0.50	1.13
CFT140-4N4-V-AA	1300 MCM	1400 MCM	1272 (45/7) (54/19)	1.315 - 1.382	4.00	1.75	4.00	4.50	6.75	0.50	1.13
CFT160-4N4-V-AA	1500 MCM	1600 MCM	1431 (45/7) (54/19)	1.413 - 1.464	4.00	1.75	4.00	4.75	6.75	0.50	1.13
CFT180-4N4-V-AA	1700 MCM	1800 MCM	1590 (45/7) (54/19)	1.504 - 1.545	4.00	1.75	4.00	4.75	6.75	0.69	1.13
CFT180-4S4-V-AA	1700 MCM	1800 MCM	1590 (45/7) (54/19)	1.504 - 1.545	4.00	2.00	4.00	4.75	6.75	0.69	1.00
CFT200-4N-V-AA	1900 MCM	2000 MCM	1780 (84/19)	1.631	3.00	1.75	3.00	4.75	5.88	0.75	0.63
CFT200-4N4-V-AA	1900 MCM	2000 MCM	1780 (84/19)	1.631	4.00	1.75	4.00	4.75	6.88	0.75	1.13
CFT216A-4N4-V-AA	—	—	2156	1.762	4.00	1.75	4.00	4.75	5.75	0.75	1.13
CFT250-4N4-V-AA	2400 MCM	2500 MCM	2156 (84/19)	1.762 - 1.823	4.00	1.75	4.00	4.75	7.00	0.75	1.13
CFT300-4N4-V-AA	2750 MCM	3000 MCM	2515 (76/19)	1.912 - 1.880	4.00	1.75	4.00	4.75	7.00	1.00	1.13
CFT350-4N4-V-AA	—	3500 MCM	—	2.158	4.00	1.75	4.00	4.75	7.25	1.00	1.13

© 2011, AFL, all rights reserved. PP-3-00282, Revision 3, 12.18.18
Specifications are subject to change without notice.

DOSSERT®

TYPE VBP-30-V-AA

30 Degree Bolted Tee Rated for 500 kV



Material

Aluminum

Hardware

Aluminum nuts, bolts and lockwashers.

Notes

- For Stainless Steel Hardware add "-SS" to catalog number. EX: VBP250-125-V-AA-SS
- For Stainless Steel bolts, lockwashers and Everdur nuts add "-SSHBN" to catalog number. EX: VBP250-125-V-AA-SSHBN
- For Grade Five Galvanized Steel Hardware add "-GS5" to catalog number. EX: VBP250-125-V-AA-GS5

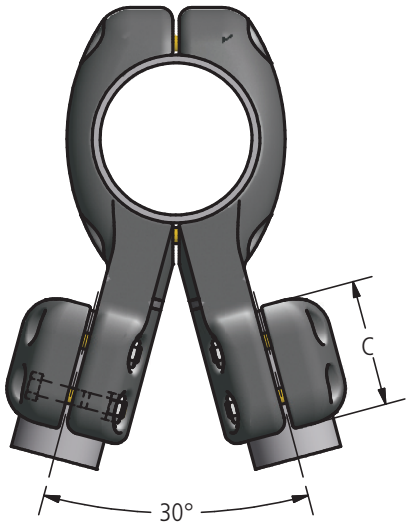

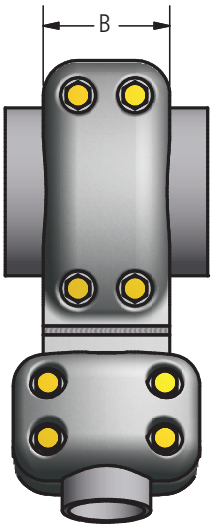

Ordering Information

CATALOG NUMBER	SPS		DIMENSIONS IN INCHES		BOLT SIZE
	RUN	TAP	B	C	
VBP250-125-30-V-AA	2 1/2	1 1/4	4 1/8	4 1/8	1/2
VBP250-250-30-V-AA	2 1/2	2 1/2	4 1/8	4 1/8	1/2
VBP400-200-30-V-AA	4	2	6	5	5/8
VBP400-250-30-V-AA	4	2 1/2	6	4 1/8	5/8
VBP400-300-30-V-AA	4	3	6	6	5/8
VBP400-400-30-V-AA	4	4	6	6	5/8
VBP500-300-30-V-AA	5	3	5 3/4	5	5/8
VBP500-400-30-V-AA	5	4	4	6	5/8
VBP600-300-30-V-AA	6	3	5	6	5/8
VBP600-400-30-V-AA	6	4	5	6	5/8

© 2011, AFL, all rights reserved. PP-3-00519, Revision 2, 1.10.2023
Specifications are subject to change without notice.

DOSSERT®

TYPE 1000-EHV

Welded Tee Pipe to Cable

Tee adapter is designed to be corona free for 345 kV and 500 kV service. Connector is saddle type which allows clamping to bus run during welding. Cable is "puddle" welded to connector; connector is then welded to bus tube. Not recommended for use on ACSR.

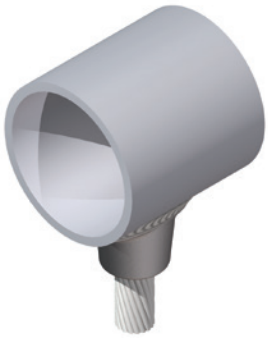

Material

Aluminum Alloy

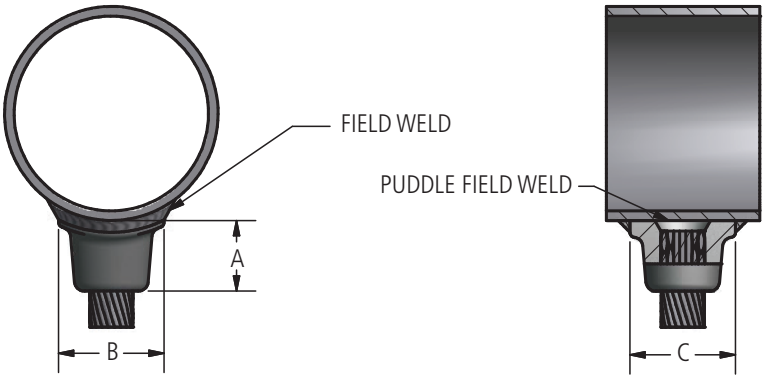

Ordering Information

TABLE 1				
CATALOG SERIES	DIMENSIONS IN INCHES			NOMINAL WEIGHT LBS
	A	B	L	
1006	1.50	1.62	2.81	0.28
1008	1.75	1.88	3.12	0.38
1009	2.00	2.25	3.50	0.62
1010	2.00	2.25	3.50	0.62
1012	2.75	2.50	3.88	0.75
1013	2.75	2.88	4.25	1.1
1014	2.75	2.88	4.25	1.1

© 2011, AFL, all rights reserved. PP-3-00149, Revision 1, 3.17.2021
Specifications are subject to change without notice.

DOSSERT®

TYPE 1000-EHV

Welded Tee Pipe to Cable

Ordering Information

TABLE 2						
STANDARD CONDUCTOR DIAMETER RANGE	AAC CONDUCTOR RANGE	CATALOG NUMBER				
		RUN CONDUCTOR (SPS & EHPS)				
IN.	MIN	3	3 1/2	4	5	6
1.048 - 1.110	900 KCMIL	1006.112 EHV	1006.112 EHV	1006.112 EHV	1006.112 EHV	1006.112 EHV
1.111 - 1.173	954 KCMIL	1008.119 EHV	1008.119 EHV	1008.119 EHV	1008.119 EHV	1008.119 EHV
1.174 - 1.235	1113 KCMIL - 1192.5 KCMIL	1008.125 EHV	1008.125 EHV	1008.125 EHV	1008.125 EHV	1008.125 EHV
1.236 - 1.297	1192.5 KCMIL	1008.131 EHV	1008.131 EHV	1008.131 EHV	1008.131 EHV	1008.131 EHV
1.298 - 1.360	1272 KCMIL - 1351.5 KCMIL	1009.138 EHV	1010.138 EHV	1010.138 EHV	1010.138 EHV	1010.138 EHV
1.361 - 1.423	1431 KCMIL - 1510.5 KCMIL	1009.144 EHV	1010.144 EHV	1010.144 EHV	1010.144 EHV	1010.144 EHV
1.424 - 1.485	1590 KCMIL	1009.150 EHV	1010.150 EHV	1010.150 EHV	1010.150 EHV	1010.150 EHV
1.486 - 1.542	1750 KCMIL	1009.156 EHV	1010.156 EHV	1010.156 EHV	1010.156 EHV	1010.156 EHV
1.543 - 1.605	-	1012.162 EHV	1012.162 EHV	1012.162 EHV	1012.162 EHV	1012.162 EHV
1.606 - 1.668	2000 KCMIL	1012.169 EHV	1012.169 EHV	1012.169 EHV	1012.169 EHV	1012.169 EHV
1.669 - 1.730	2250 KCMIL	1012.175 EHV	1012.175 EHV	1012.175 EHV	1012.175 EHV	1012.175 EHV
1.731 - 1.792	-	1012.181 EHV	1012.181 EHV	1012.181 EHV	1012.181 EHV	1012.181 EHV
1.793 - 1.855	2500 KCMIL	1012.188 EHV	1012.188 EHV	1012.188 EHV	1012.188 EHV	1012.188 EHV
1.856 - 1.918	2750 KCMIL	1013.194 EHV	1014.194 EHV	1014.194 EHV	1014.194 EHV	1014.194 EHV
1.919 - 1.980	-	1013.200 EHV	1014.200 EHV	1014.200 EHV	1014.200 EHV	1014.200 EHV
1.981 - 2.042	3000 KCMIL	1013.206 EHV	1014.206 EHV	1014.206 EHV	1014.206 EHV	1014.206 EHV
2.043 - 2.105	-	1013.212 EHV	1014.212 EHV	1014.212 EHV	1014.212 EHV	1014.212 EHV

© 2011, AFL, all rights reserved. PP-3-00149, Revision 1, 3.17.2021
Specifications are subject to change without notice.

DOSSERT®

TYPE WT3C-8-V-AA

Welded Tee Pipe to Three NEMA Pad

Welded tee pipe with three NEMA pads is designed to be corona free for 345 kV and 500 kV service.

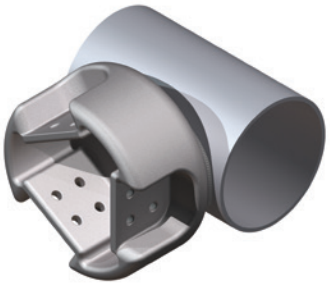

Material

Aluminum Alloy

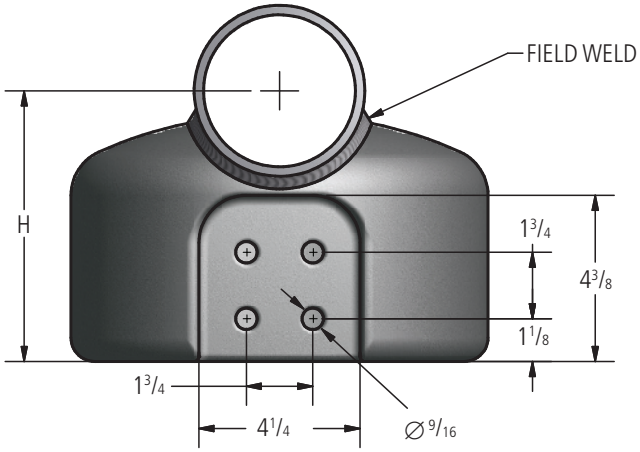

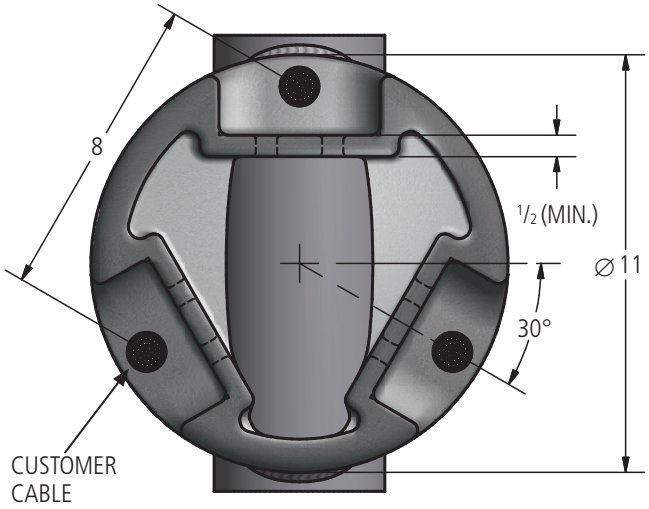

Ordering Information

CATALOG NUMBER	SPS	H IN INCHES
WT3C400-8-V-AA	4	7 1/8
WT3C500-8-V-AA	5	7 21/32
WT3C600-8-V-AA	6	8 11/16
WT3C800-8-V-AA	8	9 15/16
WT3C800R-8-V-AA	8 O.D.	9 5/8

© 2011, AFL, all rights reserved. PP-3-00547, Revision 2, 4.28.14
Specifications are subject to change without notice.

DOSSERT®
TYPE 3500-EHV



Tee Adapter

Bolted-compression tee adapters are designed to have better corona characteristics than the conductors on which it is installed. Designed to be corona free for 345 kV and 500 kV service. Contact surfaces are protected with oxide inhibitor.

Material

Aluminum Alloy

Mounting Hardware

Galvanized steel bolts and lockwashers.

Hardware

Yellow anodized aluminum bolts, nuts, and lockwashers.

Notes

Connector is ordered by combining partial catalog number for pipe run (Table 1) with partial catalog number for stranded branch (Table 2).

Example: 6" SPS run to 1590 KCM (1.454") tap. Order by Cat. No. "3513.3-38.156EHV"



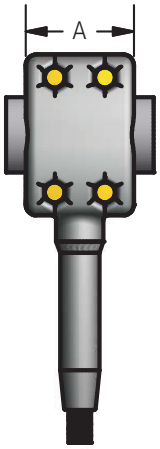

Ordering Information

TABLE 1

PARTIAL CATALOG NUMBER	RUN CONDUCTOR SIZE SPS & EHPS	BRANCH CONDUCTOR DIAMETER RANGE ACSR OR STR. ALUM.	DIMENSIONS IN INCHES		NO. OF BOLTS	PARTIAL WEIGHT RUN
			A	B		
3508.1	3	1.026 - 1.196	5.12	4.56	4	7.2
3508.2	3	1.212 - 1.417	5.12	4.56	4	7.4
3508.3	3	1.424 - 1.545	5.12	4.56	4	7.5
3509.1	3 1/2	1.026 - 1.196	5.12	5.12	4	11.1
3509.2	3 1/2	1.212 - 1.417	5.12	5.12	4	11.3
3509.3	3 1/2	1.424 - 1.545	5.12	5.12	4	11.4
3510.1	4	1.026 - 1.196	5.12	5.62	4	15.0
3510.2	4	1.212 - 1.417	5.12	5.62	4	15.2
3510.3	4	1.424 - 1.545	5.12	5.62	4	15.3
3512.2	5	1.212 - 1.417	11.80	6.62	6	18.8
3512.3	5	1.424 - 1.545	11.80	6.62	6	19.0
3512.4	5	1.602 - 1.823	11.80	6.62	6	19.1
3513.2	6	1.212 - 1.417	11.80	7.69	6	20.0
3513.3	6	1.424 - 1.545	11.80	7.69	6	20.2
3513.4	6	1.602 - 1.823	11.80	7.69	6	20.3

© 2011, AFL, all rights reserved. PP-3-00192, Revision 0, 3.7.11
Specifications are subject to change without notice.

DOSSERT®

TYPE 3500-EHV

Tee Adapter

Ordering Information

TABLE 2

PARTIAL CATALOG NUMBER	CONDUCTOR				DIE SIZE	PARTIAL WEIGHT RUN
	KCMIL	STRAND		DIAMETER		
		AL	ST			LBS
-30.109 EHV	795.0	37 & 61	-	1.026	30 AH	1.7
-30.116 EHV	795.0	26	7	1.108	30 AH	1.6
-30.122 EHV	954.0	37 & 61	-	1.124	30 AH	1.6
-30.122 EHV	954.0	45	7	1.165	30 AH	1.5
-30.125 EHV	954.0	54	7	1.196	30 AH	1.5
-34.128 EHV	1033.5	45	7	1.212	34 AH	2.3
-34.128 EHV	1113.0	61	-	1.216	34 AH	2.3
-34.128 EHV	1195.5	45	7	1.302	34 AH	2.1
-36.144 EHV	1272.0	45	7	1.345	36 AH	2.6
-36.147 EHV	1351.5	45	7	1.385	36 AH	2.4
-38.156 EHV	1590.0	61 & 91	-	1.454	38 AH	2.9
-40.162 EHV	1590.0	45	7	1.504	40 AH	3.4
-42.178 EHV	1780.0	84	19	1.602	42 AH	3.9
-44.184 EHV	2156.0	84	19	1.7625	44 AH	3.6
-44.188 EHV	2500.0	91	-	1.823	44 AH	3.4

© 2011, AFL, all rights reserved. PP-3-00192, Revision 0, 3.7.11
Specifications are subject to change without notice.

DOSSERT®

TYPE BC-V-AA



Tee Connector

Tee connector is designed to be corona free for 500 kV service.

Material

Aluminum Alloy

Hardware

Yellow anodized aluminum nuts, bolts, and lockwashers.

Notes

- For Stainless Steel bolts, lockwashers and Everdur nuts, add "-SSHBN" to catalog number.
  EX: BC103-127-AA-SSHBN
- For Grade Five Galvanized Steel hardware, add "-GS5" to catalog number.
  EX: BC140-140-V-AA-GS5

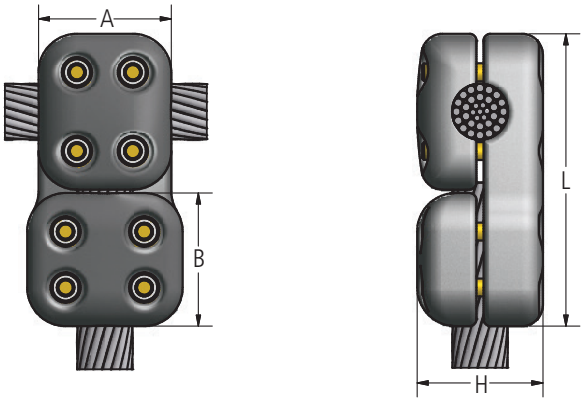

Ordering Information

CATALOG NUMBER	CABLE RANGE						DIMENSIONS IN INCHES			
	RUN			TAP						
	ALUMINUM		ACSR	ALUMINUM		ACSR	A	B	H	L
	MIN	MAX		MIN	MAX					
BC79-79-V-AA	750 MCM	795 MCM	636 (18/1;24/7;26/7)	750 MCM	795 MCM	636 (18/1;24/7;26/7)	4.50	4.50	3.38	8.75
BC95-95-V-AA	800 MCM	954 MCM	795 (47/7;24/7;26/7)	800 MCM	954 MCM	795 (47/7;24/7;26/7)	4.00	4.00	3.69	8.00
BC95A-95A-V-AA	-	954 MCM	954 (45/7;54/7)	–	954 MCM	954 (45/7;54/7)	4.50	4.50	3.69	9.13
BC103-103-V-AA	1000 MCM	1033.5 MCM	954 (45/7;54/7)	1000 MCM	1033.5 MCM	954 (45/7;54/7)	4.00	4.00	3.88	8.13
BC103-127-V-AA	1000 MCM	1033.5 MCM	954 (45/7;54/7)	1113 MCM	1272 MCM	1113 (45/7;54/7)	4.50	4.50	3.63	9.00
BC103-250-V-AA	1000 MCM	1033.5 MCM	954 (45/7;54/7)	-	2500 MCM	2156 (84/19)	4.50	4.50	4.00	9.00
BC127-79-V-AA	1113 MCM	1272 MCM	1113 (45/7;54/7)	750 MCM	795 MCM	636 (18/1;24/7;26/7)	4.50	4.50	3.63	9.06
BC127-95-V-AA	1113 MCM	1272 MCM	1113 (45/7;54/7)	800 MCM	954 MCM	795 (47/7;24/7;26/7)	4.00	4.50	3.63	9.06
BC127-127-V-AA	1113 MCM	1272 MCM	1113 (45/7;54/7)	1113 MCM	1272 MCM	1113 (45/7;54/7)	4.50	4.50	3.63	9.13
BC140-140-V-AA	1300 MCM	1400 MCM	1272 (45/7;54/19) 1351.5 (45/7)	1300 MCM	1400 MCM	1272 (45/7;54/19) 1351.5 (45/7)	4.50	4.50	3.50	9.13

© 2011, AFL, all rights reserved. PP-3-00244, Revision 5, 1.10.2023
Specifications are subject to change without notice.

345/500 kV Tee Connectors

DOSSERT®

TYPE BC-V-AA

Tee Connector

Ordering Information

CATALOG NUMBER	CABLE RANGE						DIMENSIONS IN INCHES			
	RUN			TAP						
	ALUMINUM		ACSR	ALUMINUM		ACSR	A	B	H	L
	MIN	MAX		MIN	MAX					
BC140-200-V-AA	1300 MCM	1400 MCM	1272 (45/7;54/19) 1351.5 (45/7)	1900 MCM	2000 MCM	1780 (84/19)	4.50	4.50	3.63	9.13
BC160-160-V-AA	1500 MCM	1600 MCM	1431 (45/7;54/19) 1351.5 (54/19)	1500 MCM	1600 MCM	1431 (45/7;54/19) 1351.5 (54/19)	4.75	4.75	4.03	9.75
BC180-180-V-AA	1700 MCM	1800 MCM	1590 (45/7;54/19)	1700 MCM	1800 MCM	1590 (45/7;54/19)	4.75	4.75	4.00	9.88
BC200-200-V-AA	1900 MCM	2000 MCM	1780 (84/19)	1900 MCM	2000 MCM	1780 (84/19)	5.13	4.75	4.00	10.00
BC205-95-V-AA	2000 MCM	2049 MCM	1780 (84/19) 2034 (72/7)	800 MCM	954 MCM	795 (47/7;24/7;26/7)	4.75	4.50	4.00	8.00
BC205-160-V-AA	2000 MCM	2049 MCM	1780 (84/19) 2034 (72/7)	1500 MCM	1600 MCM	1431 (45/7;54/19) 1351.5 (54/19)	4.75	4.75	4.00	9.63
BC205-205-V-AA	2000 MCM	2049 MCM	1780 (84/19) 2034 (72/7)	2000 MCM	2049 MCM	1780 (84/19) 2034 (72/7)	5.00	5.00	4.00	10.25
BC250-103-V-AA	–	2500 MCM	2156 (84/19)	1000 MCM	1033.5 MCM	954 (45/7;54/7)	4.50	4.50	3.81	9.63
BC250-160-V-AA	–	2500 MCM	2156 (84/19)	1500 MCM	1600 MCM	1431 (45/7;54/19) 1351.5 (54/19)	4.50	4.50	3.81	9.63
BC250-250-V-AA	–	2500 MCM	2156 (84/19)	–	2500 MCM	2156 (84/19)	4.50	4.50	3.81	9.63
BC250-350-V-AA	–	2500 MCM	2156 (84/19)	–	3500 MCM	–	4.50	4.50	4.25	9.63
BC300-160-V-AA	2750 MCM	3000 MCM	2515 (76/19)	1500 MCM	1600 MCM	1431 (45/7;54/19) 1351.5 (54/19)	4.75	4.75	4.50	10.44
BC300-300-V-AA	2750 MCM	3000 MCM	2515 (76/19)	2750 MCM	3000 MCM	2515 (76/19)	4.75	4.75	4.75	9.88
BC350-127-V-AA	–	3500 MCM	-	1113 MCM	1272 MCM	1113 (45/7; 54/7)	5.50	4.50	4.50	10.38
BC350-200-V-AA	–	3500 MCM	–	1900 MCM	2000 MCM	1780 (84/19)	5.50	4.75	4.50	10.63
BC350-350-V-AA	–	3500 MCM	–	–	3500 MCM	–	5.50	5.50	4.50	11.50

© 2011, AFL, all rights reserved. PP-3-00244, Revision 5, 1.10.2023
Specifications are subject to change without notice.

DOSSERT®

TYPE 34900-EHV

Welded Straight Adapter

Bi-conductor and tri-conductor adapter is designed to be corona free for 345 kV and 500 kV service. Conductor adapters are furnished as complete assembly consisting of the conductor adapter, 90° EHV compression terminals and necessary aluminum hardware. Weights shown do not include compression terminals.

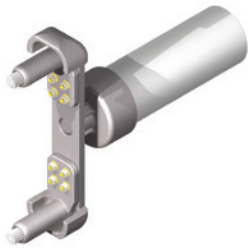

34928-EHV

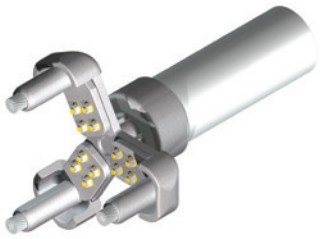

34908-EHV

Material

Aluminum Alloy

Mounting Hardware

Galvanized steel bolts and lockwashers.

Hardware

Yellow anodized aluminum bolts, nuts, and lockwashers.

Notes

For conductor adapters without terminals, do not include Die Size or Bore Code in part number. Example: for a tri-conductor adapter to 6" SPS, order 34913EHV.

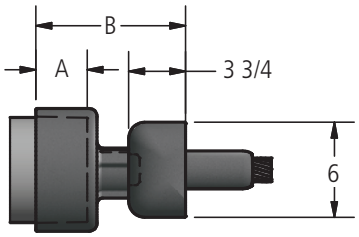

BI-CONDUCTOR

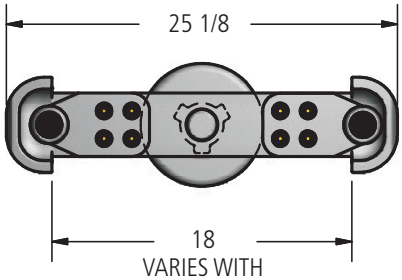

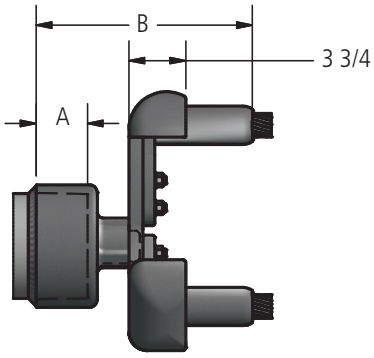

TRI-CONDUCTOR

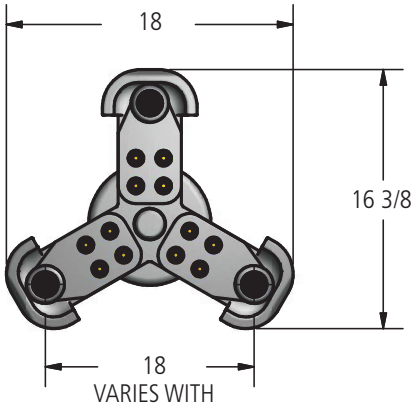

© 2011, AFL, all rights reserved. PP-3-00187, Revision 1, 3.16.2021
Specifications are subject to change without notice.

DOSSERT®

TYPE 34900-EHV

Welded Straight Adapter

Ordering Information

SPS & EHPS	CATALOG NUMBER		DIMENSIONS IN INCHES		NOMINAL WEIGHT IN LBS	
	BI-CONDUCTOR	TRI-CONDUCTOR	A	B	BI-CONDUCTOR	TRI-CONDUCTOR
3	34928EHV.XX.YYY	34908EHV.XX.YYY	1.75	7.97	13.6	15.3
3 1/2	34929EHV.XX.YYY	34909EHV.XX.YYY	2.00	8.22	14.1	15.8
4	34930EHV.XX.YYY	34910EHV.XX.YYY	2.25	8.47	14.7	16.4
5	34932EHV.XX.YYY	34912EHV.XX.YYY	2.75	8.97	16.0	17.7
6	34933EHV.XX.YYY	34913EHV.XX.YYY	3.25	9.47	17.6	19.3

34933 EHV.XX.YYY

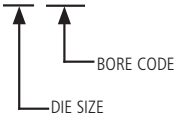

CODE	CONDUCTOR				DIE SIZE ALUMINUM HEX DIE
	ACSR OR AAC	SIZE KCMIL	STRANDING AL/ST	DIAMETER IN INCHES	
30.109	ACSR	715.5	24/7	1.036	30AH
	ACSR	715.5	26/7	1.051	
	ACSR	795	36/1	1.040	
	AAC	795	37	1.026	
	AAC	795	61	1.028	
	AAC	800	37	1.031	
	AAC	800	61	1.031	
30.116	ACSR	715.5	30/19	1.081	30AH
	ACSR	795	45/7	1.063	
	ACSR	795	54/7	1.093	
	ACSR	795	26/7	1.108	
	ACSR	795	24/7	1.092	
	AAC	900	61	1.094	
30.122	ACSR	795	30/19	1.140	30AH
	ACSR	900	45/7	1.131	
	ACSR	900	54/7	1.162	
	ACSR	954	36/1	1.140	
	ACSR	954	45/7	1.165	
	AAC	954	37	1.124	
	AAC	954	61	1.126	
	AAC	1000	61	1.152	
	AAC	1033.5	37	1.170	
	AAC	1033.5	61	1.172	
30.125	ACSR	954	54/7	1.196	30AH
	ACSR	1033.5	36/1	1.186	

© 2011, AFL, all rights reserved. PP-3-00187, Revision 1, 3.16.2021
Specifications are subject to change without notice.

DOSSERT®

TYPE 34900-EHV

Welded Straight Adapter

CODE	CONDUCTOR				DIE SIZE ALUMINUM HEX DIE
	ACSR OR AAC	SIZE KCMIL	STRANDING AL/ST	DIAMETER IN INCHES	
34.128	ACSR	1033.5	45/7	1.212	34AH
	AAC	1113	61	1.216	
34.134	ACSR	1033.5	54/7	1.244	34AH
	ACSR	1113	45/7	1.259	
	AAC	1192.5	61	1.258	
	AAC	1272	61	1.300	
34.138	ACSR	1192.5	45/7	1.302	34AH
	ACSR	1113	54/19	1.293	
36.144	ACSR	1272	45/7	1.345	36AH
	ACSR	1192.5	54/19	1.333	
	AAC	1351	61	1.340	
	AAC	1431	61	1.379	
36.147	ACSR	1272	54/19	1.382	36AH
	ACSR	1351.5	45/7	1.386	
	ACSR	1500	91	1.412	
	AAC	1510.5	61	1.187	
38.150	ACSR	1351.5	54/19	1.424	38AH
	ACSR	1431	45/7	1.427	
38.156	ACSR	1431	54/19	1.465	38AH
	ACSR	1510.5	45/7	1.466	
	AAC	1590	61	1.250	
	AAC	1590	91	1.454	
40.162	ACSR	1510.5	54/19	1.506	40AH
	ACSR	1590	45/7	1.504	
	ACSR	1590	54/19	1.545	
	AAC	1750	61	1.525	
42.178	ACSR	1780	84/19	1.602	42AH
	ACSR	2034	72/7	1.681	
	AAC	2000	91	1.630	
44.181	ACSR	2167	72/7	1.737	44AH
	AAC	2250	91	1.729	
	AAC	2300	61	1.750	
	AAC	2300	91	1.750	
44.184	ACSR	2156	84/19	1.762	44AH
44.188	ACSR	2312	76/19	1.802	44AH
	AAC	2500	91	1.823	
48.197	ACSR	2515	76/19	1.880	48AH
	AAC	2750	91	1.912	

© 2011, AFL, all rights reserved. PP-3-00187, Revision 1, 3.16.2021
Specifications are subject to change without notice.

DOSSERT®

TYPE 34992-EHV, 34993-EHV

Welded Tee Adapter

Bi-conductor tee adapter is designed to be corona free for 345 kV and 500 kV service.
Bi-conductor tee adapter is furnished as complete assembly consisting of bi-conductor adapter, two 90° EHV compression terminals and necessary aluminum hardware.
Complete assembly is ordered by specifying catalog number and size of stranded conductor.



Material

Aluminum Alloy

Mounting Hardware

Galvanized steel bolts and lockwashers.

Hardware

Yellow anodized aluminum bolts, nuts, and lockwashers.

Notes

For conductor adapters without terminals, do not include Die Size or Bore Code in part number. Example: for a Bi-conductor adapter to 6" SPS, order 34993EHV.

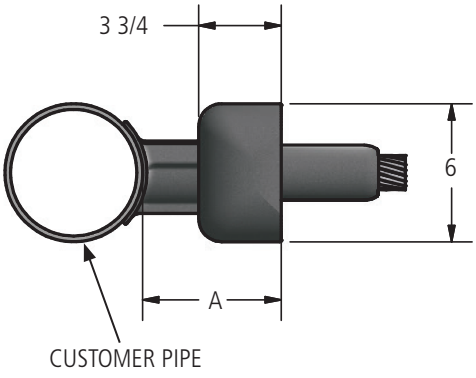

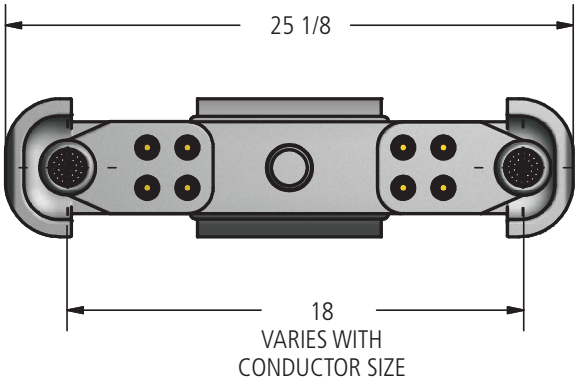

Ordering Information

CONDUCTOR SIZE SPS & EHPS	CATALOG NUMBER	DIMENSIONS IN INCHES	NOMINAL WEIGHT
		A	LBS
3 THRU 4	34992EHV.XX.YYY	6.16	11.9
5 & 6	34993EHV.XX.YYY	6.36	13.6

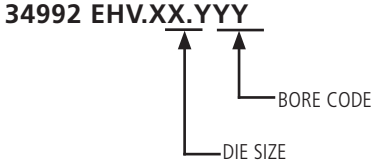

© 2011, AFL, all rights reserved. PP-3-00188, Revision 3, 3.16.2021
Specifications are subject to change without notice.

DOSSERT®

TYPE 34992-EHV, 34993-EHV

Welded Tee Adapter

CODE	CONDUCTOR				DIE SIZE ALUMINUM HEX DIE
	ACSR OR AAC	SIZE KCMIL	STRANDING AL/ST	DIAMETER IN INCHES	
30.109	ACSR	715.5	24/7	1.036	30AH
	ACSR	715.5	26/7	1.051	
	ACSR	795	36/1	1.040	
	AAC	795	37	1.026	
	AAC	795	61	1.028	
	AAC	800	37	1.031	
	AAC	800	61	1.031	
30.116	ACSR	715.5	30/19	1.081	30AH
	ACSR	795	45/7	1.063	
	ACSR	795	54/7	1.093	
	ACSR	795	26/7	1.108	
	ACSR	795	24/7	1.092	
	AAC	900	61	1.094	
30.122	ACSR	795	30/19	1.140	30AH
	ACSR	900	45/7	1.131	
	ACSR	900	54/7	1.162	
	ACSR	954	36/1	1.140	
	ACSR	954	45/7	1.165	
	AAC	954	37	1.124	
	AAC	954	61	1.126	
	AAC	1000	61	1.152	
	AAC	1033.5	37	1.170	
	AAC	1033.5	61	1.172	
30.125	ACSR	954	54/7	1.196	30AH
	ACSR	1033.5	36/1	1.186	
34.128	ACSR	1033.5	45/7	1.212	34AH
	AAC	1113	61	1.216	
34.134	ACSR	1033.5	54/7	1.244	34AH
	ACSR	1113	45/7	1.259	
	AAC	1192.5	61	1.258	
	AAC	1272	61	1.300	
34.138	ACSR	1192.5	45/7	1.302	34AH
	ACSR	1113	54/19	1.293	
36.144	ACSR	1272	45/7	1.345	36AH
	ACSR	1192.5	54/19	1.333	
	AAC	1351	61	1.340	
	AAC	1431	61	1.379	

© 2011, AFL, all rights reserved. PP-3-00188, Revision 3, 3.16.2021
Specifications are subject to change without notice.

DOSSERT®

TYPE 34992-EHV, 34993-EHV

Welded Tee Adapter

CODE	CONDUCTOR				DIE SIZE ALUMINUM HEX DIE
	ACSR OR AAC	SIZE KCMIL	STRANDING AL/ST	DIAMETER IN INCHES	
36.147	ACSR	1272	54/19	1.382	36AH
	ACSR	1351.5	45/7	1.386	
	ACSR	1500	91	1.412	
	AAC	1510.5	61	1.187	
38.150	ACSR	1351.5	54/19	1.424	38AH
	ACSR	1431	45/7	1.427	
38.156	ACSR	1431	54/19	1.465	38AH
	ACSR	1510.5	45/7	1.466	
	AAC	1590	61	1.250	
	AAC	1590	91	1.454	
40.162	ACSR	1510.5	54/19	1.506	40AH
	ACSR	1590	45/7	1.504	
	ACSR	1590	54/19	1.545	
	AAC	1750	61	1.525	
42.178	ACSR	1780	84/19	1.602	42AH
	ACSR	2034	72/7	1.681	
	AAC	2000	91	1.630	
44.181	ACSR	2167	72/7	1.737	44AH
	AAC	2250	91	1.729	
	AAC	2300	61	1.750	
	AAC	2300	91	1.750	
44.184	ACSR	2156	84/19	1.762	44AH
44.188	ACSR	2312	76/19	1.802	44AH
	AAC	2500	91	1.823	
48.197	ACSR	2515	76/19	1.880	48AH
	AAC	2750	91	1.912	

© 2011, AFL, all rights reserved. PP-3-00188, Revision 3, 3.16.2021
Specifications are subject to change without notice.

DOSSERT®

TYPE 34996-EHV, 34997-EHV

Welded Tee Adapter

Tri-conductor tee adapter is designed to be corona free for 345 kV and 500 kV service. Tri-conductor tee adapter is furnished as complete assembly consisting of tri-conductor adapter, three 90° EHV compression terminals and necessary aluminum hardware. Weights shown do not include compression terminals.

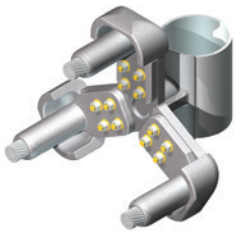

34996-EHV

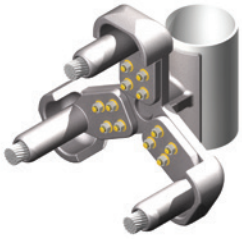

34997-EHV

Material

Aluminum Alloy

Mounting Hardware

Galvanized steel bolts and lockwashers.

Hardware

Yellow anodized aluminum bolts, nuts, and lockwashers.

Notes

For conductor adapters without terminals, do not include Die Size or Bore Code in part number. Example: for a Tri-conductor adapter to 6" SPS, order 34997EHV.

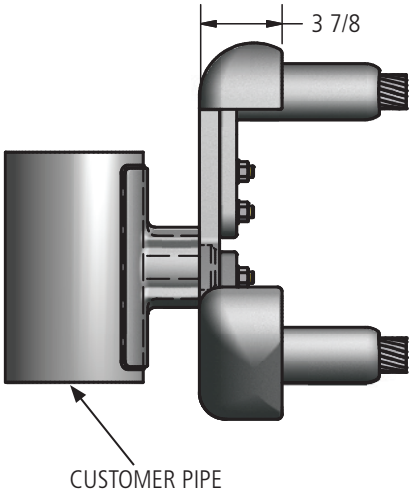

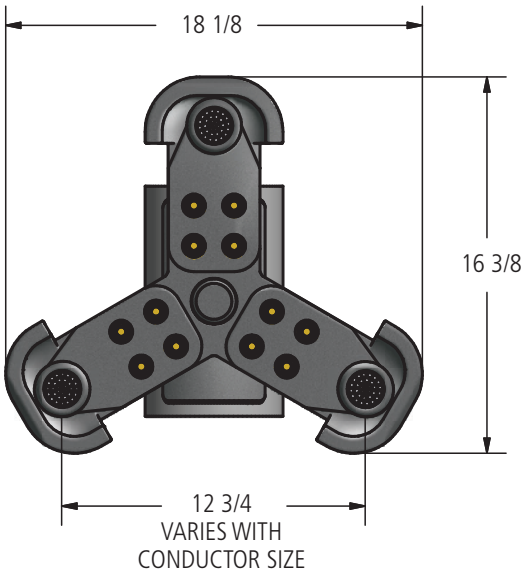

Ordering Information

CONDUCTOR SIZE SPS & EHPS	CATALOG NUMBER	DIMENSIONS IN INCHES	NOMINAL WEIGHT
		A	LBS
3 THRU 4	34996 EHV.XX.YYY	6.16	13.8
5 & 6	34997 EHV.XX.YYY	6.36	15.5

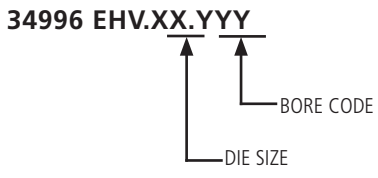

© 2011, AFL, all rights reserved. PP-3-00190, Revision 1, 3.16.2021
Specifications are subject to change without notice.

DOSSERT®

TYPE 34996-EHV, 34997-EHV

Welded Tee Adapter

CODE	CONDUCTOR				DIE SIZE ALUMINUM HEX DIE
	ACSR OR AAC	SIZE KCMIL	STRANDING AL/ST	DIAMETER IN INCHES	
30.109	ACSR	715.5	24/7	1.036	30AH
	ACSR	715.5	26/7	1.051	
	ACSR	795	36/1	1.040	
	AAC	795	37	1.026	
	AAC	795	61	1.028	
	AAC	800	37	1.031	
	AAC	800	61	1.031	
30.116	ACSR	715.5	30/19	1.081	30AH
	ACSR	795	45/7	1.063	
	ACSR	795	54/7	1.093	
	ACSR	795	26/7	1.108	
	ACSR	795	24/7	1.092	
	AAC	900	61	1.094	
30.122	ACSR	795	30/19	1.140	30AH
	ACSR	900	45/7	1.131	
	ACSR	900	54/7	1.162	
	ACSR	954	36/1	1.140	
	ACSR	954	45/7	1.165	
	AAC	954	37	1.124	
	AAC	954	61	1.126	
	AAC	1000	61	1.152	
	AAC	1033.5	37	1.170	
	AAC	1033.5	61	1.172	
30.125	ACSR	954	54/7	1.196	30AH
	ACSR	1033.5	36/1	1.186	
34.128	ACSR	1033.5	45/7	1.212	34AH
	AAC	1113	61	1.216	
34.134	ACSR	1033.5	54/7	1.244	34AH
	ACSR	1113	45/7	1.259	
	AAC	1192.5	61	1.258	
	AAC	1272	61	1.300	
34.138	ACSR	1192.5	45/7	1.302	34AH
	ACSR	1113	54/19	1.293	
36.144	ACSR	1272	45/7	1.345	36AH
	ACSR	1192.5	54/19	1.333	
	AAC	1351	61	1.340	
	AAC	1431	61	1.379	

© 2011, AFL, all rights reserved. PP-3-00190, Revision 1, 3.16.2021
Specifications are subject to change without notice.

DOSSERT®

TYPE 34996-EHV, 34997-EHV

Welded Tee Adapter

CODE	CONDUCTOR				DIE SIZE ALUMINUM HEX DIE
	ACSR OR AAC	SIZE KCMIL	STRANDING AL/ST	DIAMETER IN INCHES	
36.147	ACSR	1272	54/19	1.382	36AH
	ACSR	1351.5	45/7	1.386	
	ACSR	1500	91	1.412	
	AAC	1510.5	61	1.187	
38.150	ACSR	1351.5	54/19	1.424	38AH
	ACSR	1431	45/7	1.427	
38.156	ACSR	1431	54/19	1.465	38AH
	ACSR	1510.5	45/7	1.466	
	AAC	1590	61	1.250	
	AAC	1590	91	1.454	
40.162	ACSR	1510.5	54/19	1.506	40AH
	ACSR	1590	45/7	1.504	
	ACSR	1590	54/19	1.545	
	AAC	1750	61	1.525	
42.178	ACSR	1780	84/19	1.602	42AH
	ACSR	2034	72/7	1.681	
	AAC	2000	91	1.630	
44.181	ACSR	2167	72/7	1.737	44AH
	AAC	2250	91	1.729	
	AAC	2300	61	1.750	
	AAC	2300	91	1.750	
44.184	ACSR	2156	84/19	1.762	44AH
44.188	ACSR	2312	76/19	1.802	44AH
	AAC	2500	91	1.823	
48.197	ACSR	2515	76/19	1.880	48AH
	AAC	2750	91	1.912	

© 2011, AFL, all rights reserved. PP-3-00190, Revision 1, 3.16.2021
Specifications are subject to change without notice.

DOSSERT®
TYPE A-Frame Assemblies

Welded (Tube)

AFL can supply prefabricated A-frame assemblies ready for field mounting and welding. Assemblies are factory fabricated from standard A-frame fittings and pipe carefully welded and inspected to insure accuracy and best performance.

A-frame fittings are designed to make fast, reliable A-frame assemblies. Fittings are designed to be welded on the outside of the pipe allowing use of both Schedule 40 and Schedule 80 pipe. Socket design allows for slight inaccuracies in field cut length of pipe.



A-Frame Assemblies

Notes

For bus conductor information, see AFL Bus Conductor catalog.

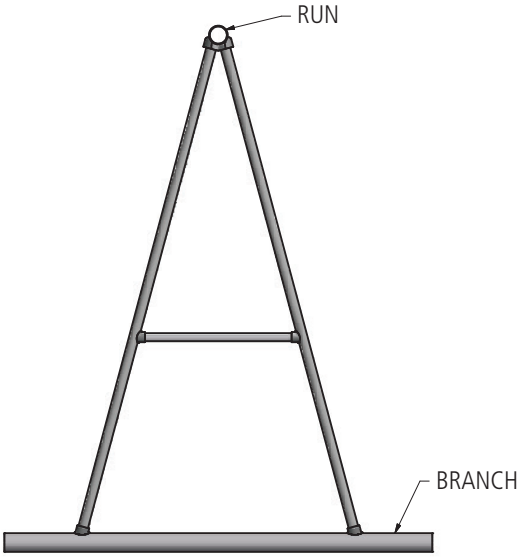

Ordering Information

To order, contact customer service with angle, top and bottom run sizes, leg size, centerline height and crossbrace size and spacing if required.

© 2011, AFL, all rights reserved. PP-3-00211, Revision 1, 7.1.13
Specifications are subject to change without notice.

DOSSERT®
TYPE 15100-EHV

Reducer Connector for Pipe

Reducer connector is designed to connect unequal pipe sizes with minimum amount of trouble. Designed for 345 kV and 500 kV service. Connector is welded on outside of pipe allowing use on both schedule 40 and schedule 80 pipe.

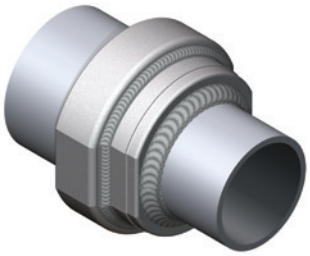

Material

Aluminum Alloy

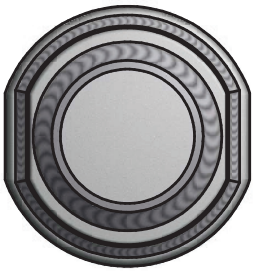

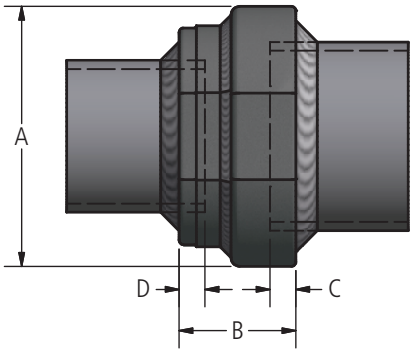

Ordering Information

CATALOG NUMBER	CONDUCTOR SIZE SPS / EHPS		DIMENSIONS IN INCHES				NOMINAL WEIGHT LBS
	RUN	BRANCH	A	B	C	D	
15108-7EHV	3	2 1/2	4.12	1.75	0.44	0.44	1.3
15109-7EHV	3 1/2	2 1/2	4.69	1.75	0.44	0.44	1.5
15109-8EHV	3 1/2	3	4.69	1.88	0.44	0.44	1.9
15110-7EHV	4	2 1/2	5.19	1.81	0.5	0.44	1.7
15110-8EHV	4	3	5.19	1.94	0.5	0.44	2.1
15110-9EHV	4	3 1/2	5.19	1.94	0.5	0.44	2.3
15112-7EHV	5	2 1/2	6.25	1.81	0.5	0.44	2.2
15112-8EHV	5	3	6.25	1.94	0.5	0.44	2.6
15112-9EHV	5	3 1/2	6.25	1.94	0.5	0.44	2.8
15112-10EHV	5	4	6.25	2.00	0.5	0.50	3.1
15113-7EHV	6	2 1/2	7.38	1.81	0.5	0.44	2.8
15113-8EHV	6	3	7.38	1.94	0.5	0.44	3.2
15113-9EHV	6	3 1/2	7.38	1.94	0.5	0.44	3.4
15113-10EHV	6	4	7.38	2.00	0.5	0.50	3.7
15113-12EHV	6	5	7.38	2.00	0.5	0.50	4.3

© 2011, AFL, all rights reserved. PP-3-00154, Revision 0, 3.4.11
Specifications are subject to change without notice.

DOSSERT®

TYPE 14700-EHV

Straight Adapter Tube to Cable

Adapter is designed to make inline connection between pipe and stranded cable. Designed for 345 kV service. Cable is "puddle" welded to connector; connector is then welded to tube. Not recommended for use on ACSR conductors due to difficulty welding steel core.

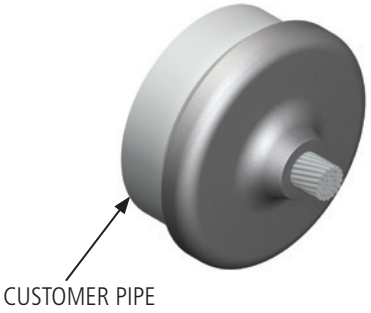

Material

Aluminum Alloy

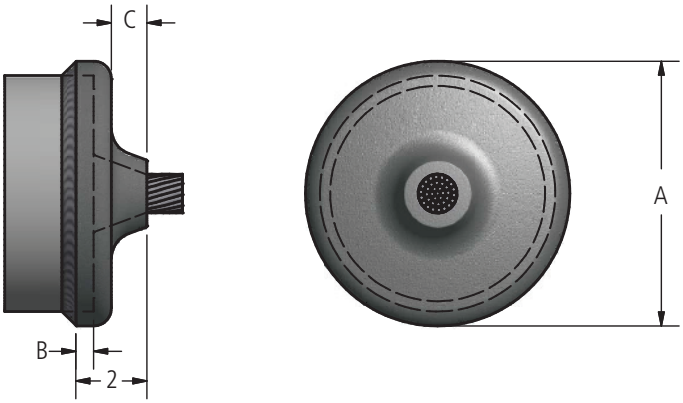

Ordering Information

TABLE 1					
SPS	CATALOG NUMBER	DIMENSIONS IN INCHES			NOMINAL WEIGHT LBS
		A	B	C	
3	14708	4.22	0.44	1.06	1.20
3 1/2	14709	4.66	0.44	1.06	1.30
4	14710	5.22	0.50	1.00	1.50
5	14712	6.38	0.50	1.00	1.90
6	14713	7.44	0.50	1.00	2.60

TABLE 2							
STANDARD CONDUCTOR RANGE			CATALOG NUMBER				
			RUN CONDUCTOR (SPS & EHPS)				
MIN	MAX	DIAMETER	3	3 1/2	4	5	6
900 MCM	-	1.048 - 1.110	14708.112 EHV	14709.112 EHV	14710.112 EHV	14712.112 EHV	14713.112 EHV
954 MCM	1033.5 MCM	1.111 - 1.173	14708.119 EHV	14709.119 EHV	14710.119 EHV	14712.119 EHV	14713.119 EHV
1113 MCM	-	1.174 - 1.235	14708.125 EHV	14709.125 EHV	14710.125 EHV	14712.125 EHV	14713.125 EHV
1192.5 MCM	1250 MCM	1.236 - 1.297	14708.131 EHV	14709.131 EHV	14710.131 EHV	14712.131 EHV	14713.131 EHV
1272 MCM	1351.5 MCM	1.298 - 1.360	14708.138 EHV	14709.138 EHV	14710.138 EHV	14712.138 EHV	14713.138 EHV
1431 MCM	1510.5 MCM	1.361 - 1.423	14708.144 EHV	14709.144 EHV	14710.144 EHV	14712.144 EHV	14713.144 EHV
1590 MCM	-	1.424 - 1.485	14708.150 EHV	14709.150 EHV	14710.150 EHV	14712.150 EHV	14713.150 EHV
1750 MCM	-	1.486 - 1.542	14708.156 EHV	14709.156 EHV	14710.156 EHV	14712.156 EHV	14713.156 EHV

© 2011, AFL, all rights reserved. PP-3-00152, Revision 0, 3.4.11
Specifications are subject to change without notice.

DOSSERT®

TYPE TP-N-V-AA, TPA-N-90-V-AA

Bolted Terminal to Pipe Rated for 500 kV

Bolted terminal for installation to pipe.



TP-N-V-AA



TPA-N-90-V-AA

Material

Aluminum Alloy

Hardware

Yellow anodized aluminum nuts, bolts, and lockwashers.

Notes

For a 3" pipe with a 4" terminal pad, at 90°, high voltage, use TPA300-4N4-90-V-AA.

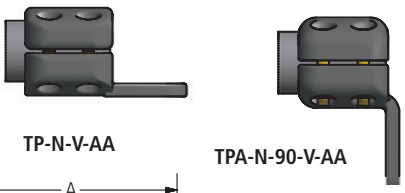

TP-N-V-AA

TPA-N-90-V-AA

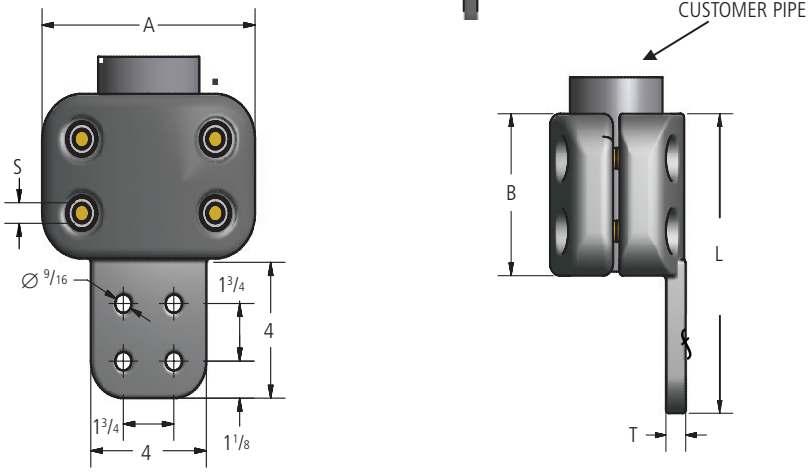

Fig. 1

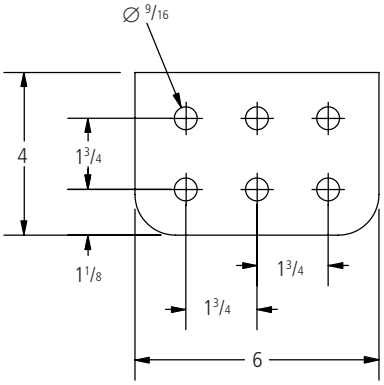

Fig. 2

© 2011, AFL, all rights reserved. PP-3-00479, Revision 3, 12.16.2021
Specifications are subject to change without notice.

DOSSERT®

TYPE TP-N-V-AA, TPA-N-90-V-AA

Bolted Terminal to Pipe Rated for 500 kV

Ordering Information

CATALOG NUMBER		SPS	FIG. NO.	DIMENSIONS IN INCHES				
STANDARD	90 DEG			A	B	L	S	T
TP250-4N4-V-AA	TPA250-4N4-90-V-AA	2 1/2	1	5 3/4	4 1/2	9	1/2	3/4
TP300-4N4-V-AA	TPA300-4N4-90-V-AA	3	1	7 3/8	5	9 1/2	5/8	3/4
TP350-4N4-V-AA	TPA350-4N4-90-V-AA	3 1/2	1	7 7/8	5	9 1/2	5/8	7/8
TP400-4N4-V-AA	TPA400-4N4-90-V-AA	4	1	8 3/8	5	10 1/2	5/8	7/8
TP400-6N4-V-AA	TPA400-6N4-90-V-AA	4	2	8 3/8	5	10 1/2	5/8	7/8
TP500-4N4-V-AA	TPA500-4N4-90-V-AA	5	1	9 9/16	6 1/4	11 31/32	5/8	1 1/8
TP500-6N4-V-AA	TPA500-6N4-90-V-AA	5	2	9 9/16	6 1/4	10 5/8	5/8	1 1/8
TP600-4N4-V-AA	TPA600-4N4-90-V-AA	6	1	10 3/8	5	9 1/2	5/8	1 1/4
TP600-6N4-V-AA	TPA600-6N4-90-V-AA	6	2	10 5/8	6 1/4	10 1/2	5/8	1 1/4
TP800R-4N4-V-AA	TPA800R-4N4-90-V-AA	8 OD	1	11 1/4	6	10 1/2	5/8	1 1/2
TP800-4N4-V-AA	TP800-4N4-90-V-AA	8	1	11	6	10 1/2	5/8	1 1/2

© 2011, AFL, all rights reserved. PP-3-00479, Revision 3, 12.16.2021
Specifications are subject to change without notice.

DOSSERT®

TYPE WTPC-N-V-AA

Welded External Centerform Terminal

Terminal is designed to be corona free for 345 kV and 500 kV service when pad covers are used to shield terminal hardware.



Material

Aluminum Alloy

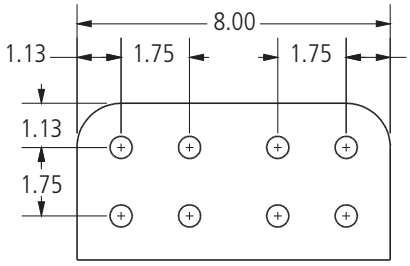

FIG. 2

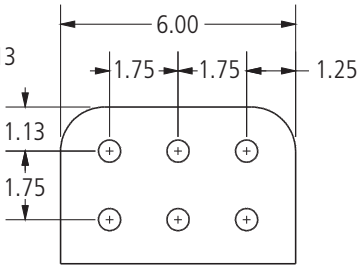

FIG. 3

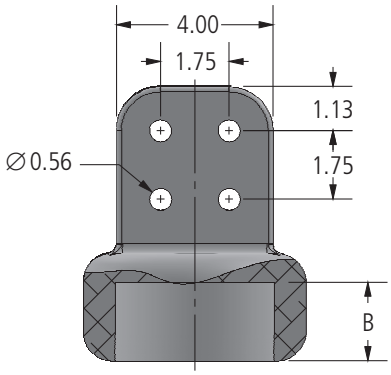

FIG. 1

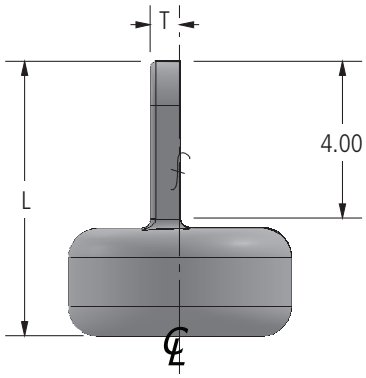

Ordering Information

CATALOG NUMBER	SPS	FIG. NO.	DIMENSIONS IN INCHES		
			B	L	T
WTPC200-4N4-V-AA	2	1	1.50	6.00	0.50
WTPC200-6N4-V-AA	2	3	1.50	6.00	0.50
WTPC300-4N4-V-AA	3	1	1.75	6.75	0.63
WTPC350-4N4-V-AA	3 1/2	1	2.00	7.00	0.75
WTPC400-4N4-V-AA	4	1	2.00	6.75	0.88
WTPC500-4N4-V-AA	5	1	2.75	7.75	0.88
WTPC500-6N4-V-AA	5	3	2.75	7.75	0.88
WTPC600-4N4-V-AA	6	1	3.00	8.00	1.00
WTPC600E-8N4-V-AA	6	2	3.00	8.00	1.00
WTPC800R-4N4-V-AA	8 OD	1	3.00	8.00	1.00
WTPC800-4N4-V-AA	8	1	3.00	8.00	1.00

© 2011, AFL, all rights reserved. PP-3-00555, Revision 2, 7.20.18
Specifications are subject to change without notice.

DOSSERT®

TYPE WTPI-N-V-AA, WTPIA-N-90-V-AA

Welded Internal Offset Terminal

Welded internal terminal standard and at 90° is designed to be corona free for 345 kV and 500 kV service.



WTPI-N-V-AA

Material

Aluminum Alloy

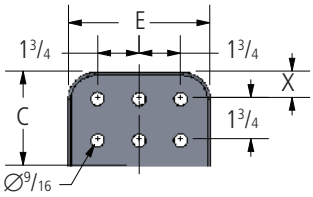

FIG. 2

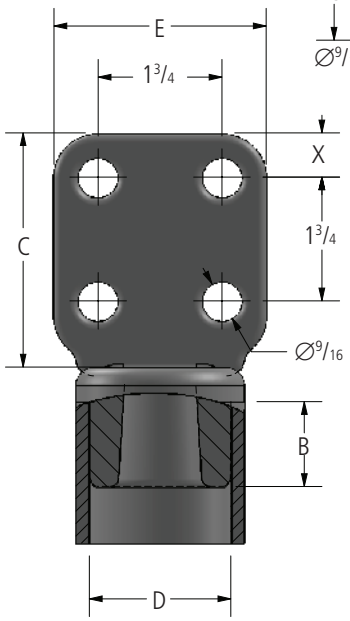

FIG. 1

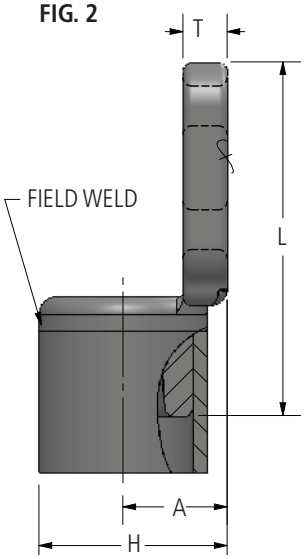

WTPI-N-V-AA

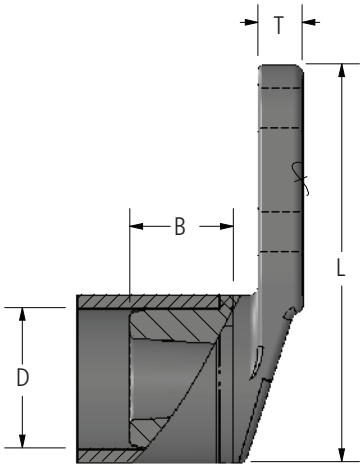

WTPIA-N-90-V-AA



WTPIA-N-90-V-AA

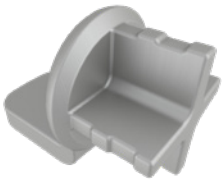

*CROSS DESIGN

continued

© 2011, AFL, all rights reserved. PP-3-00567, Revision 4, 2.27.19
Specifications are subject to change without notice.

DOSSERT®

TYPE WTPI-N-V-AA, WTPIA-N-90-V-AA

Welded Internal Offset Terminal

Ordering Information

CATALOG NUMBER		SPS	FIG. NO.	DIMENSIONS IN INCHES								
STANDARD	90 DEGREE			A	B	C	D	E	H	L	T	X
WTPI200-4N-V-AA	WTPIA200-4N-90-V-AA	2	1	1.50	1.25	3.00	2.000	3.00	2.69	4.75	0.63	0.63
WTPI200E-4N4-V-AA	WTPIA200E-4N4-90-V-AA	2	1	1.50	1.94	4.00	1.872	4.00	2.88	6.63	0.63	1.13
WTPI250-4N4-V-AA	WTPIA250-4N4-90-V-AA	2 1/2	1	1.75	1.50	4.00	2.390	4.00	3.19	6.75	0.63	1.13
WTPI400-4N4-V-AA	WTPIA400-4N4-90-V-AA	4	1	2.50	2.25	4.00	3.995	4.00	4.75	7.75	0.75	1.13
WTPI400E-4N4-V-AA	WTPIA400E-4N4-90-V-AA	4 EHPS	1	2.50	2.25	4.00	3.764	4.00	4.75	7.75	0.75	1.13
WTPI500-4N4-V-AA*	WTPIA500-4N4-90-V-AA	5	1	3.00	2.88	4.00	4.984	4.00	5.91	8.25	0.88	1.13
WTPI500-6N4-V-AA	WTPIA500-6N4-90-V-AA*	5	2	3.00	3.00	4.00	4.984	6.00	5.91	9.81	1.13	1.13
WTPI500E-4N4-V-AA	WTPIA500E-4N4-90-V-AA	5 EHPS	1	3.00	2.88	4.00	4.750	4.00	5.91	8.25	0.88	1.13
WTPI600-4N4-V-AA	WTPIA600-4N4-90-V-AA*	6	1	3.50	3.38	4.00	6.000	4.00	6.81	10.88	1.00	1.13
WTPI600E-4N4-V-AA	WTPIA600E-4N4-90-V-AA*	6	1	3.50	3.38	4.00	5.683	4.00	6.81	10.88	1.00	1.13
WPTI600-6N4-V-AA	WTPIA600-6N4-90-V-AA	6	2	3.50	3.38	4.00	6.000	6.00	6.81	10.88	1.13	1.13
WTPI800R-4N4-V-AA	WTPIA800R-4N4-90-V-AA	8 OD	1	4.50	4.00	4.00	7.154	4.00	7.75	10.00	1.00	1.13
WTPI800-4N4-V-AA	WTPIA800-4N4-90-V-AA	8	1	4.50	4.00	4.00	8.000	4.00	7.75	10.00	1.00	1.13

* Cross Design

© 2011, AFL, all rights reserved. PP-3-00567, Revision 4, 2.27.19
Specifications are subject to change without notice.

DOSSERT®

TYPE WTPIC-N-V-AA, WTPIC-E-N-V-AA



Welded Internal Terminal

Welded internal terminal is designed to be corona free for 345 kV and 500 kV service.

Material

Aluminum Alloy

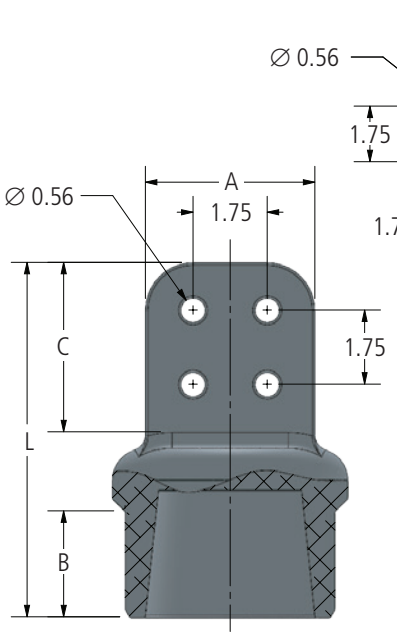

FIG. 1

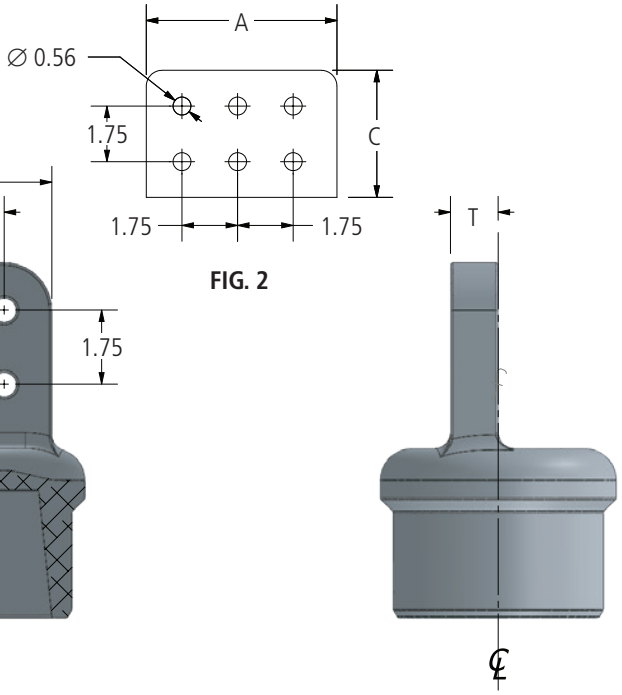

FIG. 2

Ordering Information

CATALOG NUMBER		SPS	FIG. NO.	DIMENSIONS IN INCHES				
SCHEDULE 40	SCHEDULE 80			A	B	C	L	T
WTPIC250-4N4-V-AA	WTPIC250E-4N4-V-AA	2 1/2	1	4.00	1.50	4.00	6.88	0.63
WTPIC300-4N4-V-AA	WTPIC300E-4N4-V-AA	3	1	4.00	2.00	4.00	7.38	0.63
WTPIC300-6N4-V-AA	WTPIC300E-6N4-V-AA	3	2	6.00	2.00	4.00	7.38	0.63
WTPIC350-4N4-V-AA	WTPIC350E-4N4-V-AA	3 1/2	1	4.00	2.00	4.00	7.38	0.75
WTPIC400-4N4-V-AA	WTPIC400E-4N4-V-AA	4	1	4.00	2.31	4.00	7.75	0.75
WTPIC400-6N4-V-AA	WTPIC400E-6N4-V-AA		2	6.00	2.31	4.00	7.75	0.75
WTPIC400-6N6-V-AA	WTPIC400E-6N6-V-AA		2	6.00	2.31	6.00	7.75	0.75
WTPIC500-4N4-V-AA	WTPIC500E-4N4-V-AA	5	1	4.00	3.00	4.00	8.56	1.13
WTPIC500-6N6-V-AA	WTPIC500E-6N6-V-AA		2	6.00	2.50	6.00	8.13	0.88
WTPIC600-4N4-V-AA	WTPIC600E-4N4-V-AA	6	1	4.00	3.50	4.00	9.31	1.00
WTPIC600-6N6-V-AA	WTPIC600E-6N6-V-AA		2	6.00	3.50	6.00	9.31	1.00

© 2011, AFL, all rights reserved. PP-3-00570, Revision 4, 6.1.18
Specifications are subject to change without notice.

DOSSERT®

TYPE WXL-V-AA, WXL-HV-AA

Expansion Terminal Connector

Expansion terminals are to be corona free for 345 kV and 500 kV service. Aluminum terminals can be connected to aluminum or copper terminals. Laminated straps provide for 1.75" (44.5 mm) expansion or contraction. Static steel static eliminator springs are are supplied for slip fit end of corona ring assembly.



Material

Aluminum Alloy

Hardware

Yellow anodized aluminum bolts, nuts, and lockwashers. Stainless steel bolts, nuts, and lockwashers.

Notes

If hardware sheild is required add -CSBV-to catalog
Example: WXL500E-4N4-V-AA-CSBV

For SCH 80 bus pipe, add "E" to catalog number.
Example: For 4 in SCH 80 bus pipe to 4 hole 4 in NEMA pad order: WXL400E-4N4-V-AA.

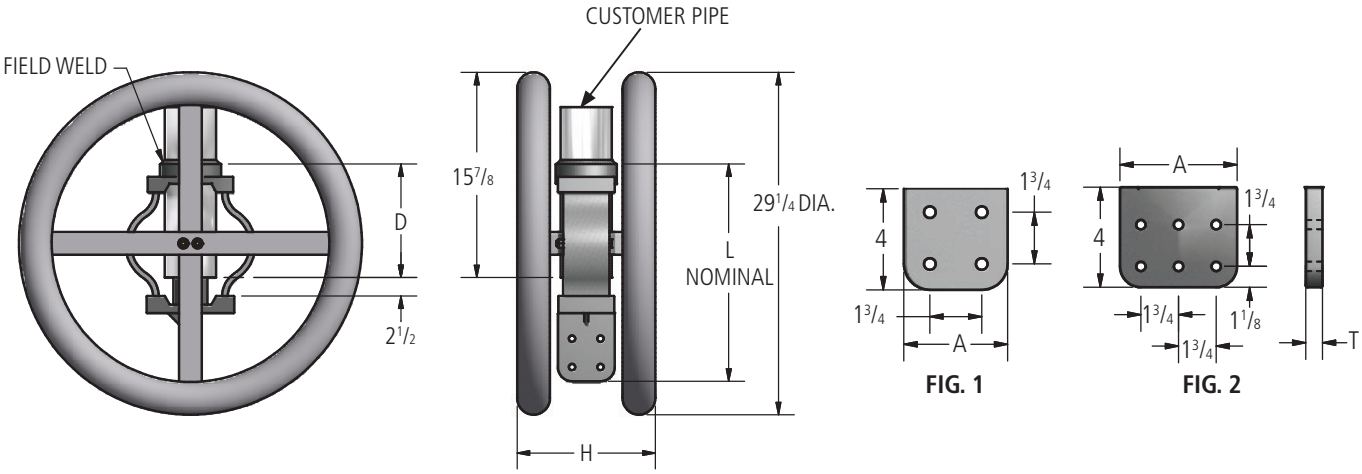

Ordering Information

CATALOG NUMBER				SPS	FIG. NO.	DIMENSIONS IN INCHES				
345 KV		500 KV				A	D	H	L	T
SCH 40	SCH 80	SCH 40	SCH 80							
WXL250-4N4-V-AA	WXL250E-4N4-V-AA	WXL250-4N4-HV-AA	WXL250E-4N4-HV-AA	2 1/2	1	4	7 11/16	10 5/8	15 7/8	5/8
WXL300-4N4-V-AA	WXL300E-4N4-V-AA	WXL300-4N4-HV-AA	WXL300E-4N4-HV-AA	3	1	4	8 3/16	11 1/8	17	5/8
WXL350-4N4-V-AA	WXL350E-4N4-V-AA	WXL350-4N4-HV-AA	WXL350E-4N4-HV-AA	3 1/2	1	4	9 3/4	11 5/8	18 5/16	3/4
WXL400-4N4-V-AA	WXL400E-4N4-V-AA	WXL400-4N4-HV-AA	WXL400E-4N4-HV-AA	4	1	4	10	12 1/8	19	3/4
WXL500-4N4-V-AA	WXL500E-4N4-V-AA	WXL500-4N4-HV-AA	WXL500E-4N4-HV-AA	5	1	4	10	13 1/8	19	7/8
WXL500-6N-V-AA	WXL500E-6N-V-AA	WXL500-6N-HV-AA	WXL500E-6N-HV-AA	5	2	5 3/4	10	13 1/8	19	7/8
WXL600-4N4-V-AA	WXL600E-4N4-V-AA	WXL600-4N4-HV-AA	WXL600E-4N4-HV-AA	6	1	4	12	14 1/4	21	1
WXL600-6N4-V-AA	WXL600E-6N4-V-AA	WXL600-6N4-HV-AA	WXL600E-6N4-HV-AA	6	2	5 3/4	12	14 1/4	21	1

© 2011, AFL, all rights reserved. PP-3-00587, Revision 2, 12.4.13
Specifications are subject to change without notice.

DOSSERT®

TYPE TC-N-V-AA, T2C-N-V-AA, TCA-N-V-AA,T2CA-N-V-A

Bolted Cable Terminal

Bolted terminal for connection to cable with NEMA Pad.



TC-N-V-AA

Material

Aluminum Alloy

Hardware

Yellow anodized aluminum nuts, bolts, and lockwashers.



T2C-N-V-AA

Notes

- For Stainless Steel Hardware add "-SS" to catalog number. Example: T2C300-4N4-V-AA-SS
- For Stainless Steel bolts, lockwashers and Everdur nuts add "-SSHBN" to catalog number. Example: T2C300-4N4-V-AA-SSHBN
- For Grade Five Galvanized Steel Hardware add "-GS5" to catalog number. Example: TCA127-4N4-90-V-AA-GS5
- For Hardware Shield add "-CSBV" to catalog number. Example: T2C127-4N4-V-AA-CSBV
- For Angled Pad add "A" to prefix and angle to catalog number. Example: TCA127-4N4-90-V-AA
- For "X" dimensions larger than listed, add spacing to the catalog number. Example: T2C300-4N4-6-V-AA
- Custom pad thicknesses are available.

6N4 PAD

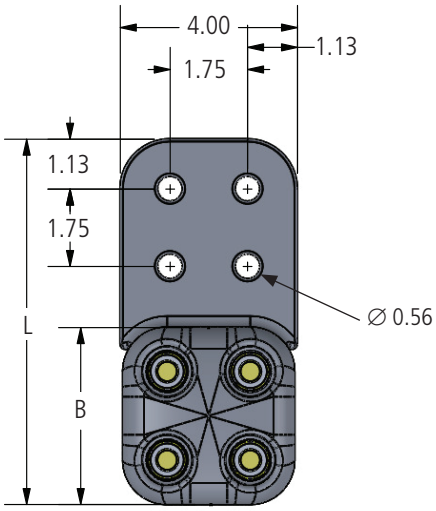

TC-N-V-AA

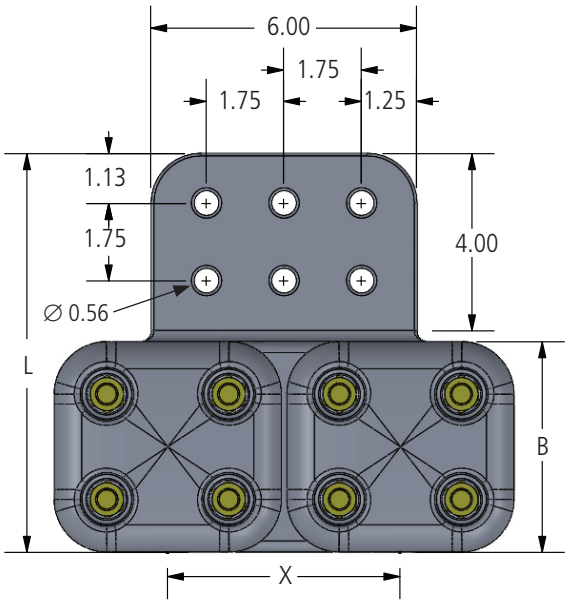

T2C-N-V-AA

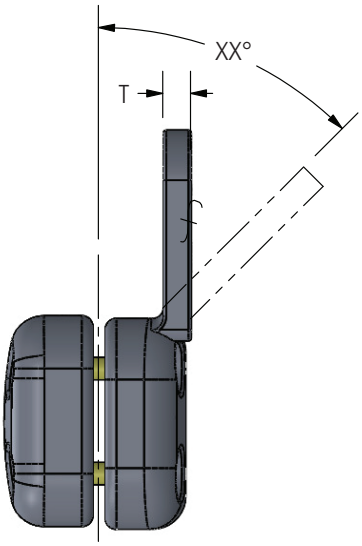

TCA-N-XX-V-AA

continued

© 2011, AFL, all rights reserved. PP-3-00471, Revision 7, 3.30.2023
Specifications are subject to change without notice.

DOSSERT®

TYPE TC-N-V-AA, T2C-N-V-AA, TCA-N-V-AA,T2CA-N-V-A

Bolted Cable Terminal

Ordering Information

CATALOG NUMBER		CABLE RANGE			DIMENSIONS IN INCHES				BOLT SIZE
		ALUMINUM		ACSR					
SINGLE CABLE	DOUBLE CABLE	MIN	MAX		B	L	T	X	
TC79-4N4-V-AA	T2C79-4N4-V-AA	750 MCM	795 MCM	636(18/1;24/7;26/7)	4.00	8.25	0.50	4.00	1/2
TC95-4N4-V-AA	T2C95-4N4-V-AA	800 MCM	945 MCM	795(47/7;24/7;26/7	4.00	8.25	0.50	4.00	1/2
TC103-4N4-V-AA	T2C103-4N4-V-AA	1000 MCM	1033.5 MCM	954(45/7;54/7)	4.00	8.25	0.50	4.00	1/2
TC127-4N4-V-AA	T2C127-4N4-V-AA	1113 MCM	1272 MCM	1033(54/7); 1113(45/7)(54/19)	4.50	8.75	0.63	4.63	1/2
–	T2C127-4N4-6-V-AA	1113 MCM	1272 MCM	1033(54/7); 1113(45/7)(54/19)	4.50	9.00	1.00	6.00	1/2
TC127-6N4-V-AA	–	1113 MCM	1272 MCM	1033(54/7); 1113(45/7)(54/19)	4.00	8.25	0.50	–	1/2
–	T2C127-6N4-6-V-AA	1113 MCM	1272 MCM	1033(54/7); 1113(45/7)(54/19)	4.00	8.25	0.50	6.00	1/2
TC140-4N4-V-AA	T2C140-4N4-V-AA	1300 MCM	1400 MCM	1272(45/7;54/19) 1351.5(45/7)	4.50	8.75	0.64	4.63	1/2
TC160-4N4-V-AA	T2C160-4N4-V-AA	1500 MCM	1600 MCM	1431(45/7;54/19) 1351.5(54/19)	4.75	9.00	0.63	5.13	1/2
–	T2C160-4N4-6-V-AA	1500 MCM	1600 MCM	1431(45/7;54/19) 1351.5(54/19)	4.75	9.00	0.75	6.00	1/2
–	T2C160-4N4-8-V-AA	1500 MCM	1600 MCM	1431(45/7;54/19) 1351.5(54/19)	4.75	9.00	0.75	8.00	1/2
TC160-6N4-V-AA	T2C160-6N4-V-AA	1500 MCM	1600 MCM	1431(45/7;54/19) 1351.5(54/19)	4.75	9.00	0.75	5.00	1/2
–	T2C160-6N4-6-V-AA	1500 MCM	1600 MCM	1431(45/7;54/19) 1351.5(54/19)	4.75	9.00	0.75	6.00	1/2
–	T2C160-6N4-8-V-AA	1500 MCM	1600 MCM	1431(45/7;54/19) 1351.5(54/19)	4.75	9.00	0.75	8.00	1/2
TC180-4N4-V-AA	T2C180-4N4-V-AA	1700 MCM	1800 MCM	1590(45/7;54/19)	4.75	9.00	0.63	5.19	1/2
TC200-4N4-V-AA	T2C200-4N4-V-AA	1900 MCM	2000 MCM	1780(84/19)	4.75	9.00	0.75	5.25	1/2
–	T2C200-4N4-6-V-AA	1900 MCM	2000 MCM	1780(84/19)	4.75	9.00	0.75	6.00	1/2
–	T2C200-4N4-12-V-AA	1900 MCM	2000 MCM	1780(84/19)	4.75	9.00	0.75	12.00	1/2
TC200-6N4-V-AA	T2C200-6N4-V-AA	1900 MCM	2000 MCM	1780(84/19)	4.75	9.00	0.75	5.25	1/2
–	T2C200-6N4-6-V-AA	1900 MCM	2000 MCM	1780(84/19)	4.75	9.00	0.75	6.00	1/2
TC205-4N4-V-AA	–	2000 MCM	2049 MCM	1780(84/19) 2034(72/7)	4.75	9.00	0.63	–	1/2
TC250-4N4-V-AA	T2C250-4N4-V-AA	2250 MCM	2500 MCM	2156(84/19)	4.75	9.00	0.88	5.50	5/8
–	T2C250-6N4-V-AA	2250 MCM	2500 MCM	2156(84/19)	4.75	9.00	0.88	5.50	5/8
TC300-4N4-V-AA	T2C300-4N4-V-AA	2750 MCM	3000 MCM	2515(76/19)	4.75	9.00	1.00	5.63	5/8
–	T2C300-4N4-6-V-AA	2750 MCM	3000 MCM	2515(76/19)	4.75	9.00	1.00	6.00	5/8
TC300-6N4-6-V-AA	T2C300-6N4-6-V-AA	2750 MCM	3000 MCM	2515(76/19)	4.75	9.25	1.25	6.00	5/8
TC300-6N4-V-AA	–	2750 MCM	3000 MCM	2515(76/19)	4.75	9.00	1.00	–	5/8
*TC350-4N4-V-AA	*T2C350-4N4-V-AA	3250 MCM	3500 MCM	3156(84/19)	5.50	9.00	1.00	6.00	5/8
–	*T2C350-6N4-13-V-AA	3250 MCM	3500 MCM	3156(84/19)	5.50	10.00	1.00	13.00	5/8
*TC364-4N4-V-AA	–	3640 MCM	–	–	5.50	9.75	1.00	–	5/8

* Design has 6 bolts per cable

© 2011, AFL, all rights reserved. PP-3-00471, Revision 7, 3.30.2023
Specifications are subject to change without notice.

DOSSERT®

TYPE WPC-N-V-AA, WP2C-N-V-AA

Welded Terminal Connector

Terminal connector is designed to be corona free for 345 kV and 500 kV service.



WPC-N-V-AA



WP2C-N-V-AA

Material

Aluminum Alloy

Notes

- For Hardware Shield, add "-CSBV" to catalog number. EX: WPC250-4N4-V-AA-CSBV.
- For (2) Hardware Shields, add "-2CSBV" to catalog number. EX: WPC250-4N4-V-AA-2CSBV.

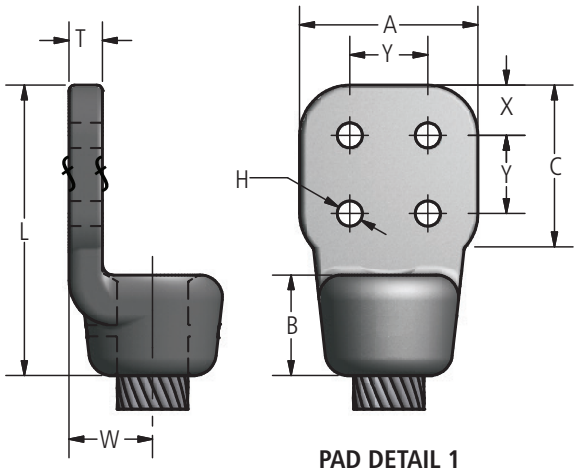

PAD DETAIL 1
WPC-N-V-AA

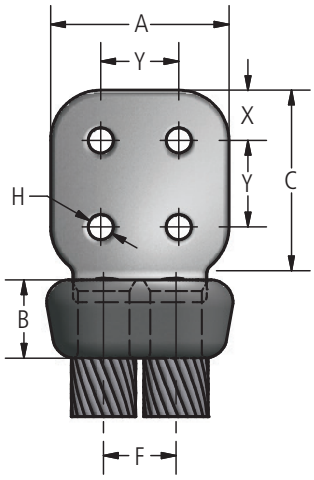

WP2C-N-V-AA

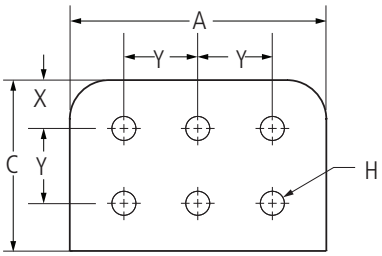

PAD DETAIL 2

Ordering Information

CATALOG NUMBER		CABLE RANGE		PAD DETAIL	DIMENSIONS IN INCHES									
		ACSR	ALUMINUM		A	B	C	F	H	L	T	W	X	Y
WPC65-4N4-V-AA	WP2C65-4N4-V-AA	556.5 (18/2, 24/7, 26/7) 636 (30/19)	600 (37, 61, 91) 636 (37) 650 (37, 61, 91)	1	4.00	1.50	4.00	1.63	0.56	5.75	0.50	1.31	0.63	1.75
WPC80-4N-V-AA	WP2C80-4N-V-AA	636 (30/19) 666.6 (24/7,26/7) 715.5 (24/7)	750 (37,61,91) 795 (37,61) 800 (61,91)	1	3.00	1.50	3.00	1.63	0.56	3.00	0.50	1.31	0.63	1.75
WPC80-4N4-V-AA	WP2C80-4N4-V-AA	636 (30/19) 666.6 (24/7,26/7) 715.5 (24/7)	750 (37,61,91) 795 (37,61) 800 (61,91)	1	4.00	1.50	4.00	1.63	0.56	4.00	0.50	1.31	1.13	1.75
WPC80-4S4-V-AA	WP2C80-4S4-V-AA	636 (30/19) 666.6 (24/7,26/7) 715.5 (24/7)	750 (37,61,91) 795 (37,61) 800 (61,91)	1	4.00	1.50	4.00	1.63	0.69	4.00	0.50	1.31	1.00	2.00
WPC90-4N4-V-AA	WP2C90-4N4-V-AA	715.5 (30/19) 795 (36/1, 45/7, 24/7, 54/7)	800 (61,91) 874.5 (37,61) 900 (37,61,91)	1	4.00	1.50	4.00	1.63	0.56	6.25	0.50	1.31	1.13	1.75

© 2011, AFL, all rights reserved. PP-3-00536, Revision 5, 7.20.18
Specifications are subject to change without notice.

DOSSERT®

TYPE WPC-N-V-AA, WP2C-N-V-AA (cont.)

Welded Terminal Connector

Ordering Information

CATALOG NUMBER		CABLE RANGE		PAD DETAIL	DIMENSIONS IN INCHES									
		ACSR	ALUMINUM		A	B	C	F	H	L	T	W	X	Y
WPC90-4S4-V-AA	WP2C90-4S4-V-AA	715.5 (30/19) 795 (36/1, 45/7, 24/7, 54/7)	800 (61,91) 874.5 (37,61) 900 (37,61,91)	1	4.00	1.50	4.00	1.63	0.69	6.25	0.50	1.31	1.00	2.00
WPC95-4N4-V-AA	WP2C95-4N4-V-AA	795 (30/19, 26/7) 874.5 (54/7) 900 (45/7, 54/7)	900 (37,61,91) 954 (37,61)	1	4.00	1.75	4.00	1.63	0.56	6.00	0.50	1.38	1.13	1.75
WPC95-4S4-V-AA	WP2C95-4S4-V-AA	795 (30/19, 26/7) 874.5 (54/7) 900 (45/7, 54/7)	900 (37,61,91) 954 (37,61)	1	4.00	1.75	4.00	1.63	0.69	6.00	0.50	1.38	1.00	2.00
WPC103-4N4-V-AA	WP2C103-4N4-V-AA	954 (36/1, 45/7, 54/7)	954 (37,61) 1000 (37, 61, 91) 1033.5 (37, 61)	1	4.00	1.75	4.00	1.75	0.56	6.00	0.50	1.38	1.13	1.75
WPC103-4S4-V-AA	WP2C103-4S4-V-AA	954 (36/1, 45/7, 54/7)	954 (37,61) 1000 (37,61,91) 1033.5 (37,61)	1	4.00	1.75	4.00	1.75	0.69	6.00	0.50	1.38	1.00	2.00
WPC103-6N4-V-AA	WP2C103-6N4-V-AA	954 (36/1, 45/7, 54/7)	954 (37,61) 1000 (37, 61, 91) 1033.5 (37, 61)	2	6.00	1.75	4.00	1.75	0.56	6.00	0.50	1.38	1.13	1.75
WPC111-4N4-V-AA	WP2C111-4N4-V-AA	1033.5 (36/1, 45/7, 54/7)	1100 (91,127) 1113 (61)	1	4.00	1.75	4.00	-	0.56	6.00	0.50	1.38	1.13	1.75
WPC111-4S4-V-AA	WP2C111-4S4-V-AA	1033.5 (36/1, 45/7, 54/7)	1100 (91,127) 1113 (61)	1	4.00	1.75	4.00	-	0.69	6.00	0.50	1.38	1.00	2.00
WPC127R-4N4-V-AA	WP2C127R-4N4-V-AA	-	1272 MCM ROPELAY	1	4.00	2.00	4.00	2.25	0.56	6.25	0.75	1.75	1.13	1.75
WPC127R-4S4-V-AA	WP2C127R-4S4-V-AA	-	1272 MCM ROPELAY	1	4.00	2.00	4.00	2.25	0.69	6.25	0.69	1.56	1.00	2.00
WPC135-4N4-V-AA	WP2C135-4N4-V-AA	1113 (45/7, 54/19) 1192.5 (45/7, 54/19)	1192.5 (61) 1200 (91,127) 1250 (91,127) 1271 (61) 1300 (91, 127) 1351.5 (61)	1	4.00	2.00	4.00	2.00	0.56	6.25	0.63	1.63	1.13	1.75
WPC135-4S4-V-AA	WP2C135-4S4-V-AA	1113 (45/7, 54/19) 1192.5 (45/7, 54/19)	1192.5 (61) 1200 (91,127) 1250 (91,127) 1271 (61) 1300 (91, 127) 1351.5 (61)	1	4.00	2.00	4.00	2.25	0.69	6.25	0.56	1.50	1.00	2.00
WPC151-4N4-V-AA	WP2C151-4N4-V-AA	1272 (45/7, 54/19) 1351 (45/7, 54/19)	1400 (91,127) 1431 (61) 1500 (91,127) 1510.5 (61)	1	4.00	2.00	4.00	2.25	0.56	6.25	0.69	1.69	1.13	1.75
WPC151-4S4-V-AA	WP2C151-4S4-V-AA	1272 (45/7, 54/19) 1351 (45/7, 54/19)	1400 (91,127) 1431 (61) 1500 (91,127) 1510.5 (61)	1	4.00	2.00	4.00	2.25	0.69	6.25	0.69	1.69	1.00	2.00

© 2011, AFL, all rights reserved. PP-3-00536, Revision 5, 7.20.18
Specifications are subject to change without notice.

DOSSERT®

TYPE WPC-N-V-AA, WP2C-N-V-AA (cont.)

Welded Terminal Connector

Ordering Information

CATALOG NUMBER		CABLE RANGE		PAD DETAIL	DIMENSIONS IN INCHES									
		ACSR	ALUMINUM		A	B	C	F	H	L	T	W	X	Y
WPC170-4N4-V-AA	WP2C170-4N4-V-AA	1431 (45/7, 54/19) 1510.5 (45/7, 54/19)	1590 (61) 1600 (127, 169) 1700 (127, 169)	1	4.00	2.00	4.00	2.25	0.56	6.50	0.69	1.69	1.13	1.75
WPC170-4S4-V-AA	WP2C170-4S4-V-AA	1431 (45/7, 54/19) 1510.5 (45/7, 54/19)	1590 (61) 1600 (127, 169) 1700 (127, 169)	1	4.00	2.00	4.00	2.25	0.69	6.50	0.69	1.69	1.00	2.00
WPC170-6N4-V-AA	WP2C170-6N4-V-AA	1431 (45/7, 54/19) 1510.5 (45/7, 54/19)	1590 (61) 1600 (127, 169) 1700 (127, 169)	2	6.00	2.00	4.00	2.25	0.56	6.50	0.69	1.69	1.13	1.75
WPC190-4N4-V-AA	WP2C190-4N4-V-AA	1590 (45/7, 54/19) 1780 (84/19)	1750 (127, 169) 1800 (127, 169) 1900 (127, 169)	1	4.00	2.25	4.00	2.25	0.56	6.50	0.69	1.75	1.13	1.75
WPC190-6N4-V-AA	WP2C190-6N4-V-AA	1590 (45/7, 54/19) 1780 (84/19)	1750 (127, 169) 1800 (127, 169) 1900 (127, 169)	2	6.00	2.25	4.00	2.25	0.56	6.63	0.88	2.25	1.13	1.75
WPC190-4S4-V-AA	WP2C190-4S4-V-AA	1590 (45/7, 54/19) 1780 (84/19)	1750 (127, 169) 1800 (127, 169) 1900 (127, 169)	1	4.00	2.25	4.00	2.25	0.69	6.50	0.69	1.75	1.00	2.00
WPC225-4N4-V-AA	WP2C225-4N4-V-AA	2167 (72/7)	2000 (91, 127, 169) 2250 (91)	1	4.00	2.25	4.00	2.38	0.56	6.50	0.75	1.88	1.13	1.75
WPC225-6N4-V-AA	WP2C225-6N4-V-AA	2167 (72/7)	2000 (91, 127, 169) 2250 (91)	2	6.00	2.25	4.00	2.38	0.56	6.50	0.75	1.88	1.13	1.75
WPC225-4S4-V-AA	WP2C225-4S4-V-AA	2167 (72/7)	2000 (91, 127, 169) 2250 (91)	1	4.00	2.25	4.00	2.38	0.69	6.50	0.75	1.88	1.00	2.00
WPC240R-4N4-V-AA	WP2C240R-4N4-V-AA	-	2.40 DIA.	1	4.00	2.75	4.00	-	0.56	6.25	1.00	2.50	1.13	1.75
WPC240R-4S4-V-AA	WP2C240R-4S4-V-AA	-	2.40 DIA.	1	4.00	2.75	4.00	-	0.69	6.25	1.00	2.50	1.00	2.50
WPC250-4N4-V-AA	WP2C250-4N4-V-AA	2156 (84/19)	2500 (91, 127, 169) 2493 (ACAR)	1	4.00	2.25	4.00	2.63	0.56	6.50	0.75	1.94	1.13	1.75
WPC250-4S4-V-AA	WP2C250-4S4-V-AA	2156 (84/19)	2500 (91, 127, 169) 2493 (ACAR)	1	4.00	2.25	4.00	2.63	0.69	6.50	0.75	1.94	1.00	2.00
WPC300-4N4-V-AA	WP2C300-4N4-V-AA	-	2750 (91) 3000 (127, 169)	1	4.00	2.25	4.00	-	0.56	6.88	0.88	2.13	1.13	1.75
WPC300-4S4-V-AA	WP2C300-4S4-V-AA	-	2750 (91) 3000 (127, 169)	1	4.00	2.25	4.00	-	0.69	6.88	0.88	2.13	1.00	2.00

© 2011, AFL, all rights reserved. PP-3-00536, Revision 5, 7.20.18
Specifications are subject to change without notice.

DOSSERT®

TYPE WPCA-45-V-AA, WP2CA-45-V-AA

Welded 45 Degree Cable Terminal

Cable terminal at 45° is designed to be corona free for 345 kV and 500 kV service.



WPCA-45-V-AA



WP2CA-45-V-AA

Material

Aluminum Alloy

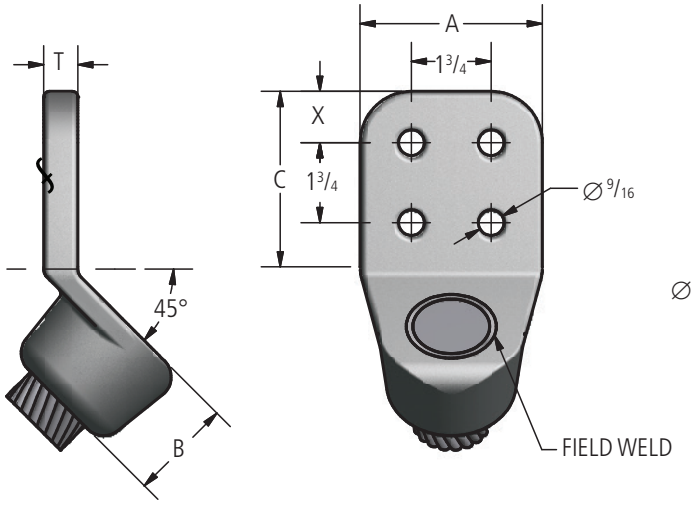

WPCA-45-V-AA

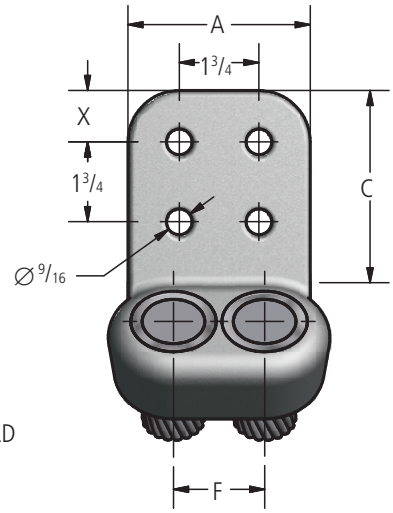

WP2CA-45-V-AA

Ordering Information

CATALOG NUMBER		CABLE RANGE		DIMENSIONS IN INCHES					
		ALUMINUM	ACSR	A	B	C	F	T	X
WPCA65-4N-45-V-AA	WP2CA65-4N-45-V-AA	600 (37,61,91) 636 (37) 650 (37,61,91)	556.5 (18/1,24/7,26/7) 636 (36/1, 18/1)	3	1 1/2	3	1 5/8	1/2	5/8
WPCA65-4N4-45-V-AA	WP2CA65-4N4-45-V-AA	600 (37,61,91) 636 (37) 650 (37,61,91)	556.5 (18/1,24/7,26/7) 636 (36/1, 18/1)	4	1 1/2	4	1 5/8	1/2	1 1/8
WPCA71-4N-45-V-AA	WP2CA71-4N-45-V-AA	650 (37,61,91) 700 (37,61,91) 715.5 (37,61)	636 (24/7, 26/7) 605 (24/7, 26/7, 30/19)	3	1 1/2	3	1 5/8	1/2	5/8
WPCA71-4N4-45-V-AA	WP2CA71-4N4-45-V-AA	650 (37,61,91) 700 (37,61,91) 715.5 (37,61)	636 (24/7, 26/7) 605 (24/7, 26/7, 30/19)	4	1 1/2	4	1 5/8	1/2	1 1/8
WPCA80-4N-45-V-AA	WP2CA80-4N-45-V-AA	750 (37,61,91) 795 (37,61) 800 (61,91)	636 (30/19) 666.6 (24/7, 26/7) 715.5 (24/7)	3	1 1/2	3	1 5/8	1/2	5/8
WPCA80-4N4-45-V-AA	WP2CA80-4N4-45-V-AA	750 (37,61,91) 795 (37,61) 800 (61,91)	636 (30/19) 666.6 (24/7, 26/7) 715.5 (24/7)	4	1 1/2	4	1 5/8	1/2	1 1/8
WPCA90-4N-45-V-AA	WP2CA90-4N-45-V-AA	800 (61,91) 874.5 (37,61) 900 (37,61,91)	715.5 (30/19) 795 (36/1, 45/7, 24/7, 54/7)	3	1 1/2	3	1 5/8	1/2	5/8
WPCA90-4N4-45-V-AA	WP2CA90-4N4-45-V-AA	800 (61,91) 874.5 (37,61) 900 (37,61,91)	715.5 (30/19) 795 (36/1, 45/7, 24/7, 54/7)	4	1 1/2	4	1 5/8	1/2	1 1/8

© 2011, AFL, all rights reserved. PP-3-00534, Revision 2, 6.22.18
Specifications are subject to change without notice.

DOSSERT®

TYPE WPCA-45-V-AA, WP2CA-45-V-AA (cont.)

Welded 45 Degree Cable Terminal

Ordering Information

CATALOG NUMBER		CABLE RANGE		DIMENSIONS IN INCHES					
		ALUMINUM	ACSR	A	B	C	F	T	X
WPCA95-4N-45-V-AA	WP2CA95-4N-45-V-AA	900 (37,61,91) 954 (37,61)	795 (30/19) 874.5 (34/7) 900 (45/7, 54/7)	3	1 3/4	3	1 5/8	1/2	5/8
WPCA95-4N4-45-V-AA	WP2CA95-4N4-45-V-AA	900 (37,61,91) 954 (37,61)	795 (30/19) 874.5 (34/7) 900 (45/7, 54/7)	4	1 3/4	4	1 5/8	1/2	1 1/8
WPCA103-4N-45-V-AA	WP2CA103-4N-45-V-AA	954 (37,61) 1000 (37,61,91) 1033.5 (37,61)	954 (36/1, 45/7, 54/7)	3	1 3/4	3	1 3/4	1/2	5/8
WPCA103-4N4-45-V-AA	WP2CA103-4N4-45-V-AA	954 (37,61) 1000 (37,61,91) 1033.5 (37,61)	954 (36/1, 45/7, 54/7)	4	1 3/4	4	1 3/4	1/2	1 1/8
WPCA111-4N-45-V-AA	WP2CA111-4N-45-V-AA	1100 (91,127) 1113 (61)	1033.5 (36/1, 45/7, 54/7)	3	1 3/4	3	1 7/8	1/2	5/8
WPCA111-4N4-45-V-AA	WP2CA111-4N4-45-V-AA	1100 (91,127) 1113 (61)	1033.5 (36/1, 45/7, 54/7)	4	1 3/4	4	1 7/8	1/2	1 1/8
WPCA135-4N-45-V-AA	WP2CA135-4N-45-V-AA	1192.5 (61) 1200 (91,127) 1250 (91,127) 1272 (61) 1300 (91,127) 1351.5 (61)	1113 (45/7, 54/19) 1192.5 (45/7, 54/19)	3	2	3	2 1/4	11/16	5/8
WPCA135-4N4-45-V-AA	WP2CA135-4N4-45-V-AA	1192.5 (61) 1200 (91,127) 1250 (91,127) 1272 (61) 1300 (91,127) 1351.5 (61)	1113 (45/7, 54/19) 1192.5 (45/7, 54/19)	4	2	4	2 1/4	11/16	1 1/8
WPCA151-4N-45-V-AA	WP2CA151-4N-45-V-AA	1400 (91,127) 1431 (61) 1500 (91,127) 1510.5 (61)	1272 (45/7, 54/19) 1351.5 (45/7, 54/19)	3	2	3	2 1/4	11/16	5/8
WPCA151-4N4-45-V-AA	WP2CA151-4N4-45-V-AA	1400 (91,127) 1431 (61) 1500 (91,127) 1510.5 (61)	1272 (45/7, 54/19) 1351.5 (45/7, 54/19)	4	2	4	2 1/4	11/16	1 1/8
WPCA170-4N-45-V-AA	WP2CA170-4N-45-V-AA	1590 (61) 1600 (127, 169) 1700 (127,169)	1431 (45/7, 54/19) 1510.5 (45/7, 54/19)	3	2	3	2 1/4	11/16	5/8
WPCA170-4N4-45-V-AA	WP2CA170-4N4-45-V-AA	1590 (61) 1600 (127, 169) 1700 (127,169)	1431 (45/7, 54/19) 1510.5 (45/7, 54/19)	4	2 1/4	4	2 1/4	3/4	1 1/8
WPCA190-4N-45-V-AA	WP2CA190-4N-45-V-AA	1750 (127,169) 1800 (127,169) 1900 (127,169)	1590 (45/7, 54/19) 1780 (85/19)	3	2 1/4	3	2 1/4	11/16	5/8
WPCA190-4N4-45-V-AA	WP2CA190-4N4-45-V-AA	1750 (127,169) 1800 (127,169) 1900 (127,169)	1590 (45/7, 54/19) 1780 (85/19)	4	2 1/4	4	2 1/4	11/16	1 1/8
WPCA225-4N-45-V-AA	WP2CA225-4N-45-V-AA	2000 (91,127,169) 2250 (91)	2167 (72/7)	3	2 1/4	3	2 1/4	3/4	5/8
WPCA225-4N4-45-V-AA	WP2CA225-4N4-45-V-AA	2000 (91,127,169) 2250 (91)	2167 (72/7)	4	2 1/4	4	2 1/4	3/4	1 1/8
WPCA250-4N-45-V-AA	WP2CA250-4N-45-V-AA	2500 (91,127,169)	2156 (84,19)	3	2 1/4	3	2 1/2	3/4	5/8
WPCA250-4N4-45-V-AA	WP2CA250-4N4-45-V-AA	2500 (91,127,169)	2156 (84,19)	4	2 1/4	4	2 1/2	3/4	1 1/8
WPCA300-4N-45-V-AA	WP2CA300-4N-45-V-AA	2750 (91) 3000 (127,169)	-	3	2 1/4	3	2 3/4	7/8	5/8
WPCA300-4N4-45-V-AA	WP2CA300-4N4-45-V-AA	2750 (91) 3000 (127,169)	-	4	2 1/4	4	2 3/4	7/8	1 1/8

© 2011, AFL, all rights reserved. PP-3-00534, Revision 2, 6.22.18
Specifications are subject to change without notice.

DOSSERT®
TYPE 34200E-EHV

Terminal Connector, Welded, Offset

Terminal is designed to be corona free for 345 kV and 500 kV service when pad covers are used to shield terminal hardware. Pad covers are not supplied with terminal; see catalog 4040 EHV pad covers on page 514. Aluminum terminal can be connected to aluminum or copper terminals.



Material

Aluminum Alloy

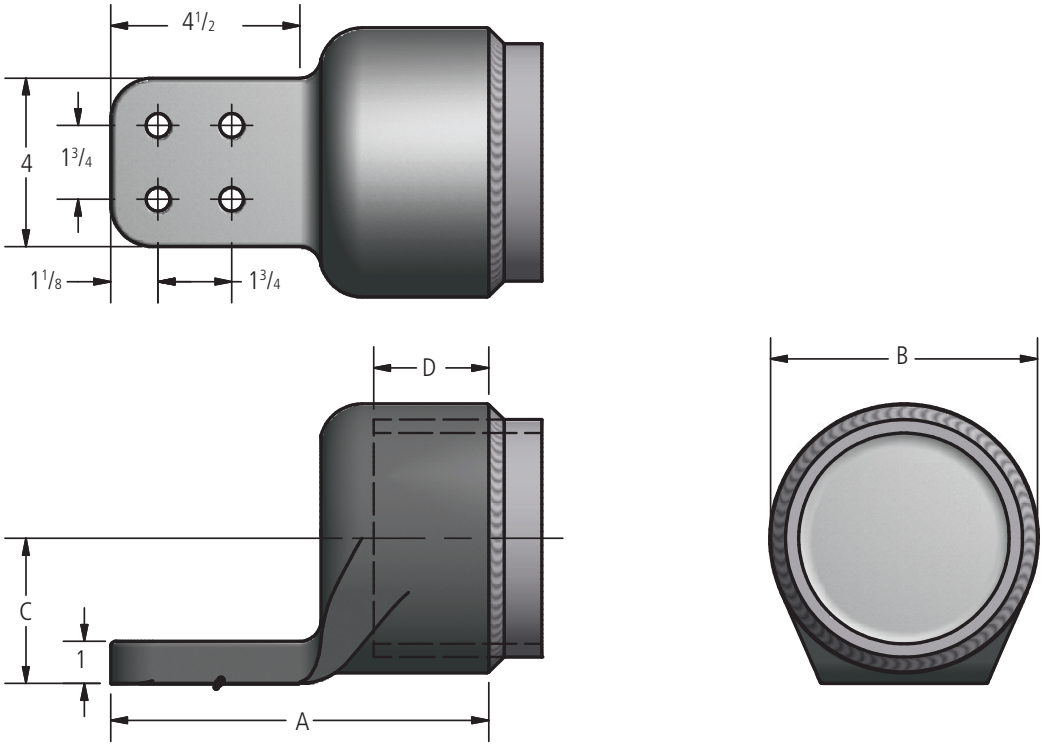

Ordering Information

CATALOG NUMBER	SPS & EPHS	DIMENSIONS IN INCHES			
		A	B	C	D
34208EEHV	3	7.62	4.12	2.62	1.75
34209EEHV	3 1/2	8.19	4.69	2.94	2.00
34210EEHV	4	8.44	5.19	3.25	2.25
34212EEHV	5	9.00	6.38	3.44	2.75
34213EEHV	6	9.50	7.56	4.25	3.25

© 2011, AFL, all rights reserved. PP-3-00178, Revision 2, 3.28.14
Specifications are subject to change without notice.

DOSSERT®
TYPE 34300-EHV



Tube to Flat

Double terminal is designed to be corona free for 345 kV and 500 kV service when pad covers are used to sheild terminal hardware.

Material

Aluminum Alloy

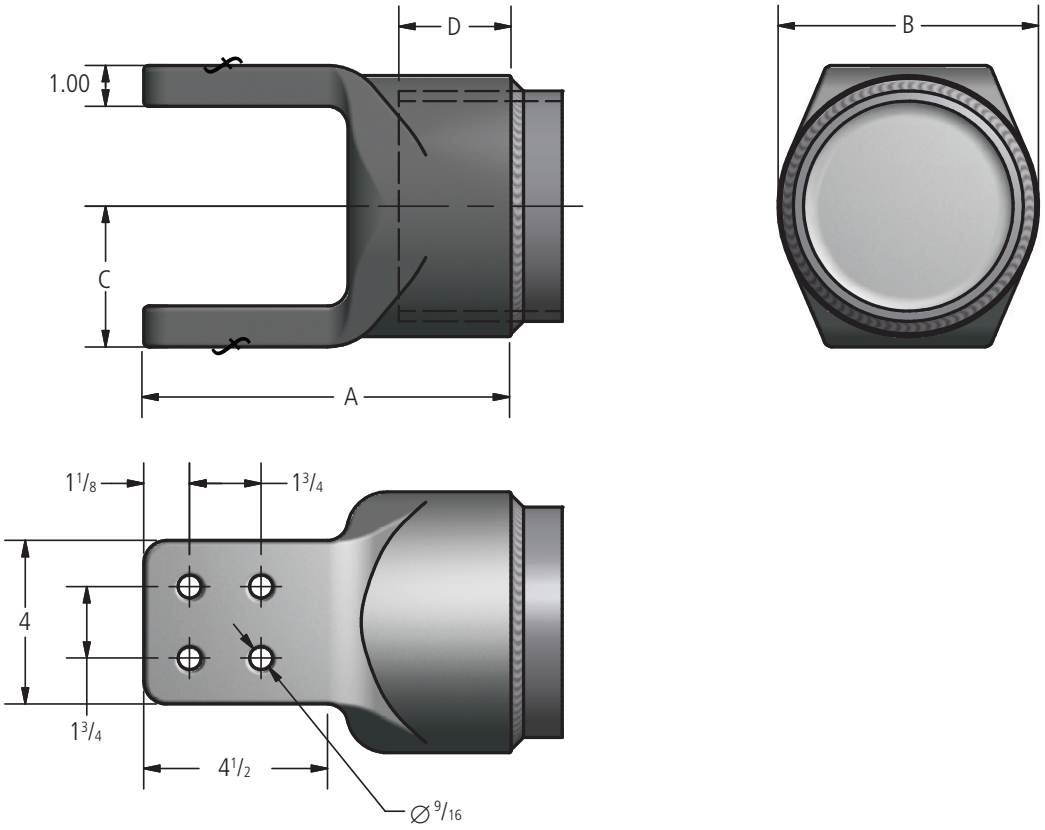

Ordering Information

CATALOG NUMBER	CONDUCTOR SIZE SCH40 & SCH80	DIMENSIONS IN INCHES			
		A	B	C	D
34308EEHV	3	7.62	4.12	2.62	1.75
34309EEHV	3 1/2	8.19	4.69	2.94	2.00
34310EEHV	4	8.44	5.19	3.25	2.25
34312EEHV	5	9.00	6.38	3.44	2.75
34313EEHV	6	9.50	7.56	4.25	3.25

© 2011, AFL, all rights reserved. PP-3-00180, Revision 2, 3.28.14
Specifications are subject to change without notice.

DOSSERT®
TYPE APTV-N-V-AA

Terminal Connector

Expands one NEMA pad to two NEMA pads. Designed for 500 kV service. Useful for connecting twin lines.



Material

Aluminum Alloy

Notes

- For hardware shield, add "-CSBV" to catalog number order: APTV4N4-18-V-AA-CSBV.
- For mounting hardware, add "-TMH" and bolt length to catalog number order: APTV4N4-18-V-AA-TMH2-1/4

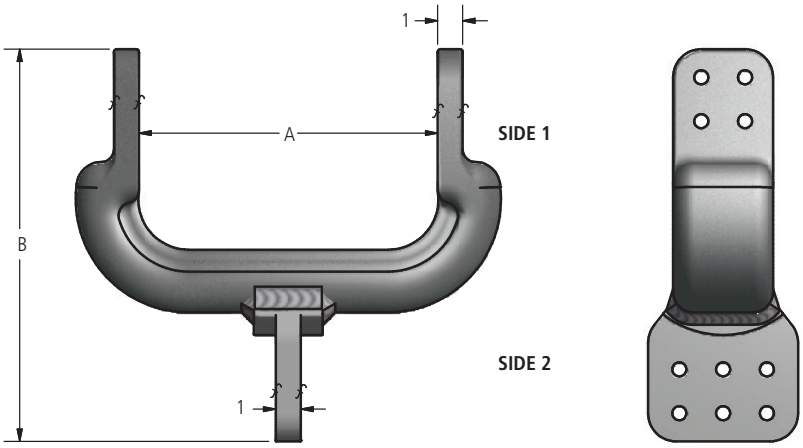

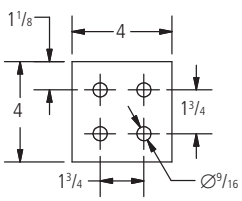

FIG 1

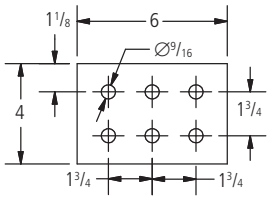

FIG 2

Ordering Information

CATALOG NUMBER	FIGURE NUMBER		DIMENSIONS IN INCHES	
	SIDE 1	SIDE 2	A	B
APTV-4N4-6-V-AA	1	1	6	15
APTV-4N4-8-V-AA	1	1	8	15
APTV-4N4-10-V-AA	1	1	10	15
APTV-4N4-12-V-AA	1	1	12	15
APTV-4N4-6N4-8-V-AA	1	2	8	15.66
APTV-4N4-6N4-12-V-AA	1	2	12	15.63
APTV-4N4-14-V-AA	1	1	14	15
APTV-4N4-16-V-AA	1	1	16	15
APTV-4N4-18-V-AA	1	1	18	15

© 2011, AFL, all rights reserved. PP-3-00216, Revision 3, 6.2.18
Specifications are subject to change without notice.

DOSSERT®
TYPE APT-V-AA



Terminal Connector

Expands one NEMA pad to two NEMA pads. Designed for 500 kV service. Useful for connecting twin lines.

Material

Aluminum Alloy

Notes

- For Mounting Hardware, add "-TMH" to catalog number. EX: APT6N4-18-V-AA-TMH
- For Hardware Shield, add "-CSBV" to catalog number. EX: APT6N4-18-V-AA-CSBV
- For Stainless Steel bolts, lockwashers and Everdur nuts, add "-SSHBN" to catalog number. EX: APT6N4-18-V-AA-SSHBN

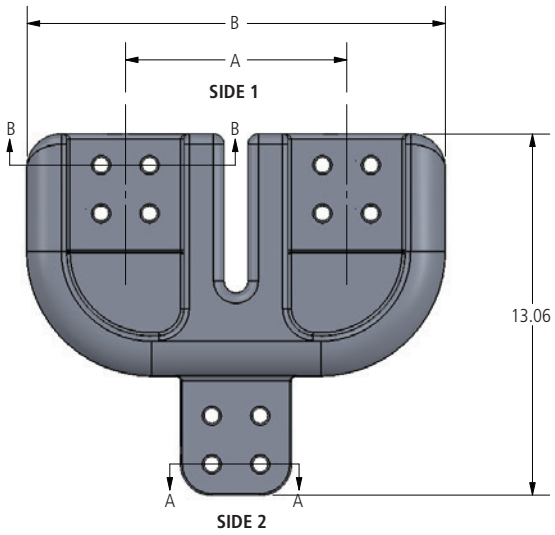

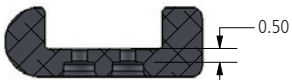

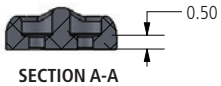

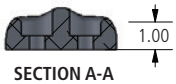

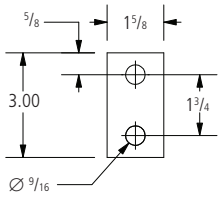

FIG 1

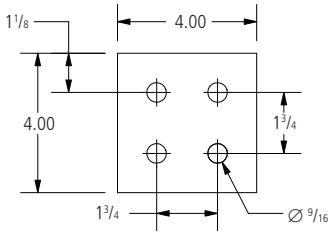

FIG 2

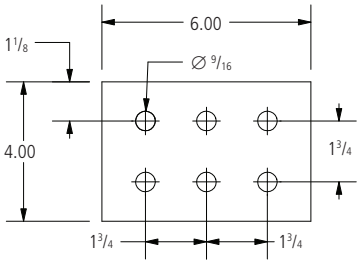

FIG 3

Ordering Information

CATALOG NUMBER	FIGURE NUMBER		SECTION A-A	DIMENSIONS IN INCHES	
	SIDE 1	SIDE 2		A	B
APT2N4-8-V-AA	1	2	—	8.00	15.13
APT4N4-8-V-AA	2	2	—	8.00	15.13
APT4N4-12-V-AA	2	2	—	12.00	19.13
APT4N4-18-V-AA	2	2	—	18.00	25.13
APT4N4-6N4-8-V-AA	2	3	ALTERNATE	8.00	15.13
APT4N4-6N4-12-V-AA	2	3	—	12.00	19.13
APT4N4-6N4-18-V-AA	2	3	ALTERNATE	18.00	25.13
APT6N4-18-V-AA	3	3	—	18.00	27.13

© 2011, AFL, all rights reserved. PP-3-00215, Revision 3, 6.28.18
Specifications are subject to change without notice.

DOSSERT®

TYPE TWTCC-N-8-V-AA

Three-Way Terminal Connector

Connects one four-hole or six-hole terminal to three four-hole terminals. 3600 amps at 30° rise over 40° ambient; 3848 amps at 40° rise over 40° ambient; 4082 amps at 50° rise over 40° ambient. Designed for 500 kV service.



Material

Aluminum Alloy

Ordering Information

Customer to order by catalog number **TWTCC4N4-8-V-AA, TWTCC4N6-8-V-AA, or TWTCC6N4-8-V-AA.**

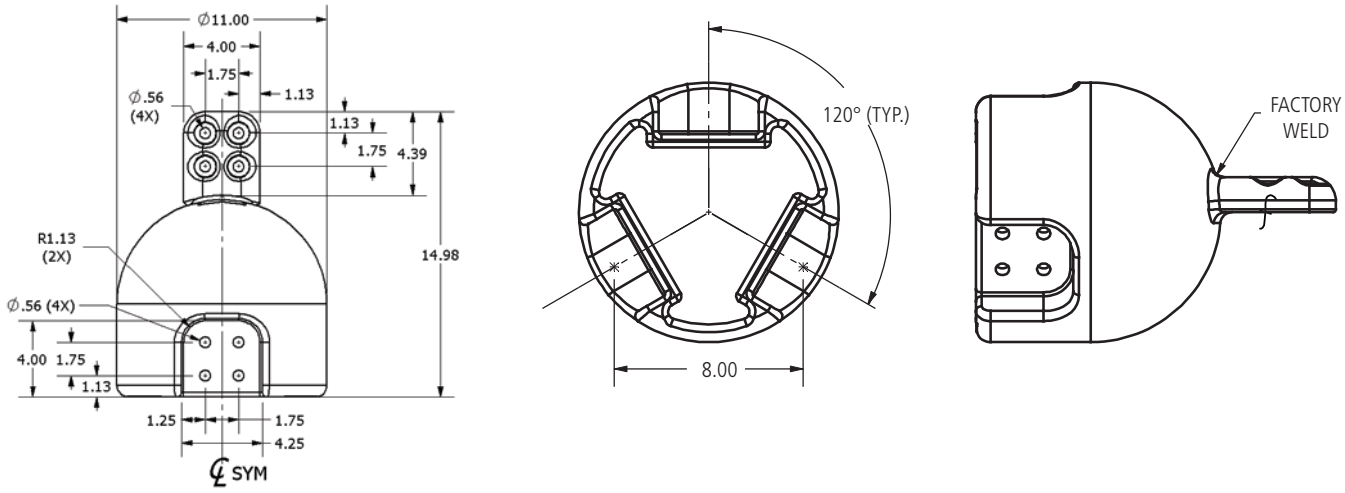

TWTCC4N4-8-V-AA

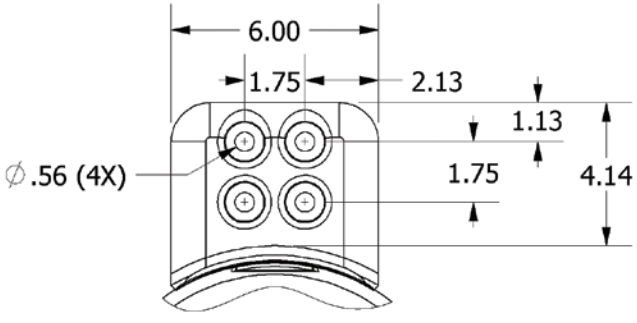

TWTCC4N6-8-V-AA

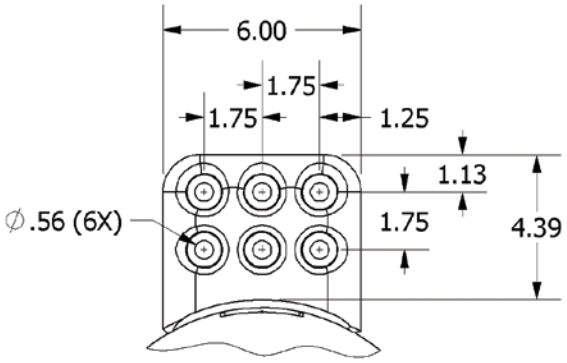

TWTCC6N4-8-V-AA

© 2011, AFL, all rights reserved. PP-3-00485, Revision 2, 4.16.19
Specifications are subject to change without notice.

DOSSERT®

TYPE 34994E-EHV, 34995E-EHV

Bi-conductor and tri-conductor terminal is designed to be corona free for 345 kV and 500 kV service. Aluminum terminal can be connected to aluminum or copper terminals; pad conforms to NEMA standards. Bi-conductor and tri-conductor terminal is furnished as a complete assembly consisting of Bi-conductor and Tri-conductor terminals, two 90° EHV compression terminals and necessary aluminum hardware. Weights shown do not include compression terminals.



34994E-EHV

Material

Aluminum Alloy

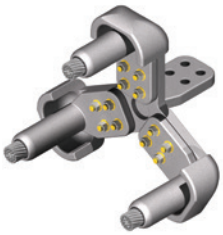

34995E-EHV

Hardware

Yellow anodized aluminum nuts, bolts, and lockwashers.

Notes

For conductor adapters without terminals, do not include Die Size or Bore Code in part number. Example: for a Tri-conductor adapter to E pad, order: 34995EEHV.

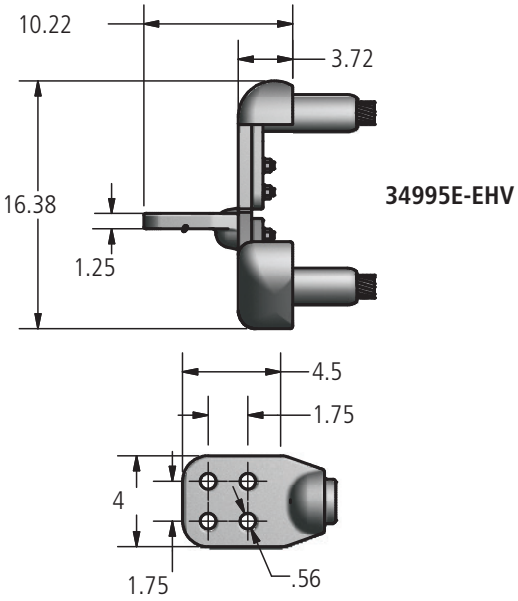

34995E-EHV

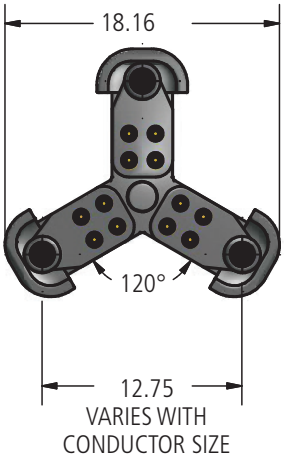

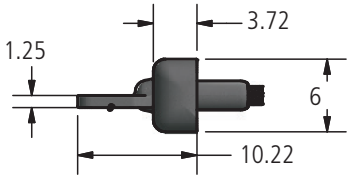

34995E-EHV

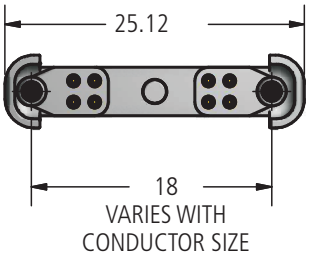

© 2011, AFL, all rights reserved. PP-3-00189, Revision 2, 3.16.2021
Specifications are subject to change without notice.

DOSSERT®

TYPE 34994E-EHV, 34995E-EHV

Ordering Information

CATALOG NUMBER	NOMINAL WEIGHT
	LBS
34994EEHV.XX.YYY	13.8
34995EEHV.XX.YYY	16.0

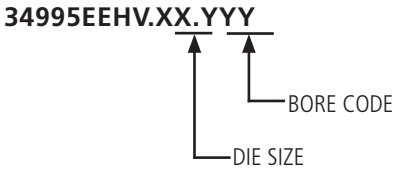

CODE	CONDUCTOR				DIE SIZE ALUMINUM HEX DIE
	ACSR OR AAC	SIZE KCMIL	STRANDING AL/ST	DIAMETER IN INCHES	
30.109	ACSR	715.5	24/7	1.036	30AH
	ACSR	715.5	26/7	1.051	
	ACSR	795	36/1	1.040	
	AAC	795	37	1.026	
	AAC	795	61	1.028	
	AAC	800	37	1.031	
	AAC	800	61	1.031	
30.116	ACSR	715.5	30/19	1.081	30AH
	ACSR	795	45/7	1.063	
	ACSR	795	54/7	1.093	
	ACSR	795	26/7	1.108	
	ACSR	795	24/7	1.092	
	AAC	900	61	1.094	
30.122	ACSR	795	30/19	1.140	30AH
	ACSR	900	45/7	1.131	
	ACSR	900	54/7	1.162	
	ACSR	954	36/1	1.140	
	ACSR	954	45/7	1.165	
	AAC	954	37	1.124	
	AAC	954	61	1.126	
	AAC	1000	61	1.152	
	AAC	1033.5	37	1.170	
	AAC	1033.5	61	1.172	
30.125	ACSR	954	54/7	1.196	30AH
	ACSR	1033.5	36/1	1.186	
34.128	ACSR	1033.5	45/7	1.212	34AH
	AAC	1113	61	1.216	
34.134	ACSR	1033.5	54/7	1.244	34AH
	ACSR	1113	45/7	1.259	
	AAC	1192.5	61	1.258	
	AAC	1272	61	1.300	
34.138	ACSR	1192.5	45/7	1.302	34AH
	ACSR	1113	54/19	1.293	

© 2011, AFL, all rights reserved. PP-3-00189, Revision 2, 3.16.2021
Specifications are subject to change without notice.

DOSSERT®

TYPE 34994E-EHV, 34995E-EHV

CODE	CONDUCTOR				DIE SIZE ALUMINUM HEX DIE
	ACSR OR AAC	SIZE KCMIL	STRANDING AL/ST	DIAMETER IN INCHES	
36.144	ACSR	1272	45/7	1.345	36AH
	ACSR	1192.5	54/19	1.333	
	AAC	1351	61	1.340	
	AAC	1431	61	1.379	
36.147	ACSR	1272	54/19	1.382	36AH
	ACSR	1351.5	45/7	1.386	
	ACSR	1500	91	1.412	
	AAC	1510.5	61	1.187	
38.150	ACSR	1351.5	54/19	1.424	38AH
	ACSR	1431	45/7	1.427	
38.156	ACSR	1431	54/19	1.465	38AH
	ACSR	1510.5	45/7	1.466	
	AAC	1590	61	1.250	
	AAC	1590	91	1.454	
40.162	ACSR	1510.5	54/19	1.506	40AH
	ACSR	1590	45/7	1.504	
	ACSR	1590	54/19	1.545	
	AAC	1750	61	1.525	
42.178	ACSR	1780	84/19	1.602	42AH
	ACSR	2034	72/7	1.681	
	AAC	2000	91	1.630	
44.181	ACSR	2167	72/7	1.737	44AH
	AAC	2250	91	1.729	
	AAC	2300	61	1.750	
	AAC	2300	91	1.750	
44.184	ACSR	2156	84/19	1.762	44AH
44.188	ACSR	2312	76/19	1.802	44AH
	AAC	2500	91	1.823	
48.197	ACSR	2515	76/19	1.880	48AH
	AAC	2750	91	1.912	

© 2011, AFL, all rights reserved. PP-3-00189, Revision 2, 3.16.2021
Specifications are subject to change without notice.

DOSSERT®

TYPE 34999E-EHV

Compression Terminal Connector (Three Cables to Flat)

Tri-conductor terminal is designed to be corona free for 345 kV and 500 kV service. Aluminum terminal can be connected to aluminum or copper terminals, pad conforms to NEMA standards. Tri-conductor terminal is furnished as complete assembly consisting of tri-conductor terminal, three 90° EHV compression terminals and necessary aluminum hardware. Complete assembly is ordered by specifying catalog number and size of stranded conductor.

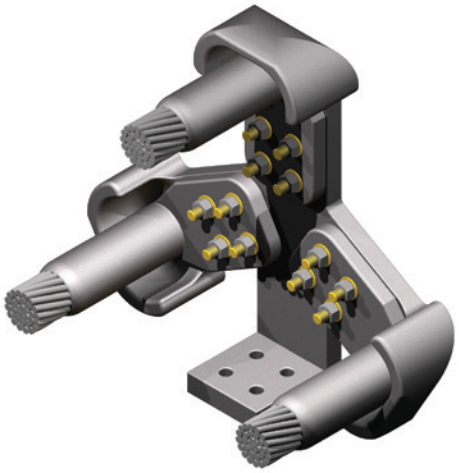

Material

Aluminum Alloy

Hardware

Yellow anodized aluminum nuts, bolts, and lockwashers.

Notes

For conductor adapters without terminals, do not include Die Size or Bore Code in part number. Example: for a Tri-conductor adapter to E pad, ORDER: 34995EEHV.

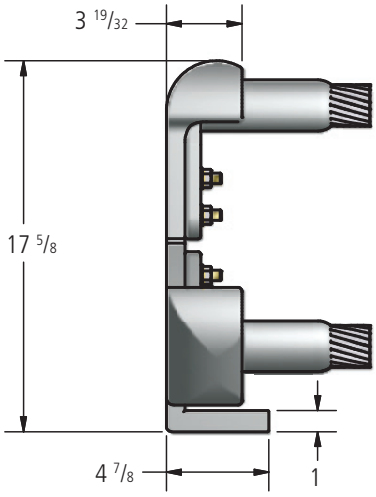

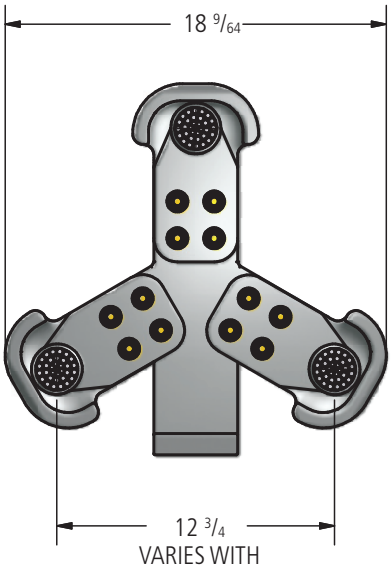

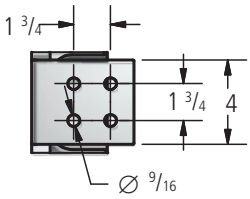

Ordering Information

CATALOG NUMBER	NOMINAL WEIGHT
	LBS
34999E-EHV-XX-YYY	16

34999EEHV.XX.YYY

- XX: DIE SIZE
- YYY: BORE CODE

© 2011, AFL, all rights reserved. PP-3-00191, Revision 2, 3.17.2021
Specifications are subject to change without notice.

DOSSERT®

TYPE 34999E-EHV

Compression Terminal Connector (Three Cables to Flat)

CODE	CONDUCTOR				DIE SIZE ALUMINUM HEX DIE
	ACSR OR AAC	SIZE KCMIL	STRANDING AL/ST	DIAMETER IN INCHES	
30.109	ACSR	715.5	24/7	1.036	30AH
	ACSR	715.5	26/7	1.051	
	ACSR	795	36/1	1.040	
	AAC	795	37	1.026	
	AAC	795	61	1.028	
	AAC	800	37	1.031	
	AAC	800	61	1.031	
30.116	ACSR	715.5	30/19	1.081	30AH
	ACSR	795	45/7	1.063	
	ACSR	795	54/7	1.093	
	ACSR	795	26/7	1.108	
	ACSR	795	24/7	1.092	
	AAC	900	61	1.094	
30.122	ACSR	795	30/19	1.140	30AH
	ACSR	900	45/7	1.131	
	ACSR	900	54/7	1.162	
	ACSR	954	36/1	1.140	
	ACSR	954	45/7	1.165	
	AAC	954	37	1.124	
	AAC	954	61	1.126	
	AAC	1000	61	1.152	
	AAC	1033.5	37	1.170	
	AAC	1033.5	61	1.172	
30.125	ACSR	954	54/7	1.196	30AH
	ACSR	1033.5	36/1	1.186	
34.128	ACSR	1033.5	45/7	1.212	34AH
	AAC	1113	61	1.216	
34.134	ACSR	1033.5	54/7	1.244	34AH
	ACSR	1113	45/7	1.259	
	AAC	1192.5	61	1.258	
	AAC	1272	61	1.300	
34.138	ACSR	1192.5	45/7	1.302	34AH
	ACSR	1113	54/19	1.293	
36.144	ACSR	1272	45/7	1.345	36AH
	ACSR	1192.5	54/19	1.333	
	AAC	1351	61	1.340	
	AAC	1431	61	1.379	

© 2011, AFL, all rights reserved. PP-3-00191, Revision 2, 3.17.2021
Specifications are subject to change without notice.

DOSSERT®

TYPE 34999E-EHV

Compression Terminal Connector (Three Cables to Flat)

CODE	CONDUCTOR				DIE SIZE ALUMINUM HEX DIE
	ACSR OR AAC	SIZE KCMIL	STRANDING AL/ST	DIAMETER IN INCHES	
36.147	ACSR	1272	54/19	1.382	36AH
	ACSR	1351.5	45/7	1.386	
	ACSR	1500	91	1.412	
	AAC	1510.5	61	1.187	
38.150	ACSR	1351.5	54/19	1.424	38AH
	ACSR	1431	45/7	1.427	
38.156	ACSR	1431	54/19	1.465	38AH
	ACSR	1510.5	45/7	1.466	
	AAC	1590	61	1.250	
	AAC	1590	91	1.454	
40.162	ACSR	1510.5	54/19	1.506	40AH
	ACSR	1590	45/7	1.504	
	ACSR	1590	54/19	1.545	
	AAC	1750	61	1.525	
42.178	ACSR	1780	84/19	1.602	42AH
	ACSR	2034	72/7	1.681	
	AAC	2000	91	1.630	
44.181	ACSR	2167	72/7	1.737	44AH
	AAC	2250	91	1.729	
	AAC	2300	61	1.750	
	AAC	2300	91	1.750	
44.184	ACSR	2156	84/19	1.762	44AH
44.188	ACSR	2312	76/19	1.802	44AH
	AAC	2500	91	1.823	
48.197	ACSR	2515	76/19	1.880	48AH
	AAC	2750	91	1.912	

© 2011, AFL, all rights reserved. PP-3-00191, Revision 2, 3.17.2021
Specifications are subject to change without notice.

DOSSERT®

TYPE 33900, 34000

Rope Lay Expansion Terminal

Expansion terminal is designed to be corona free for 500 kV service. Aluminum terminal can be connected to aluminum or copper terminals. Terminal pad conforms to NEMA standards. Rope lay expansion member provides for 1.75" of expansion or contraction. Dimension "B" shown in table includes 2.25", "D" Dimension noted in general information section.



33900E-EHV

Material

Aluminum Alloy



34000E-EHV

34000 SERIES
CENTER FORMED TERMINAL

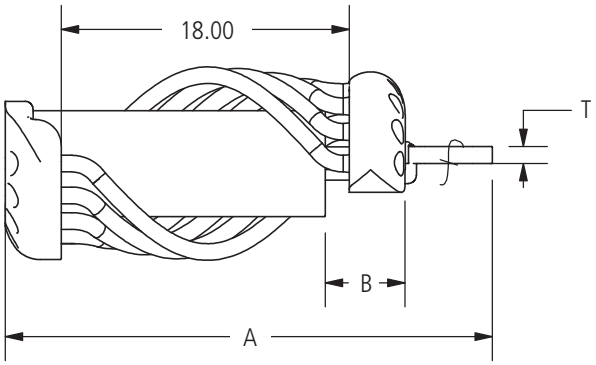

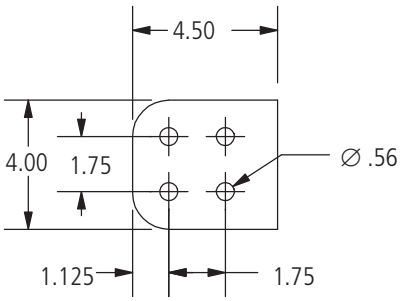

FIG. 1

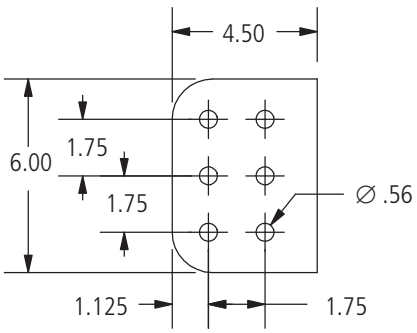

FIG. 2

33900 SERIES
OFFSET TERMINAL

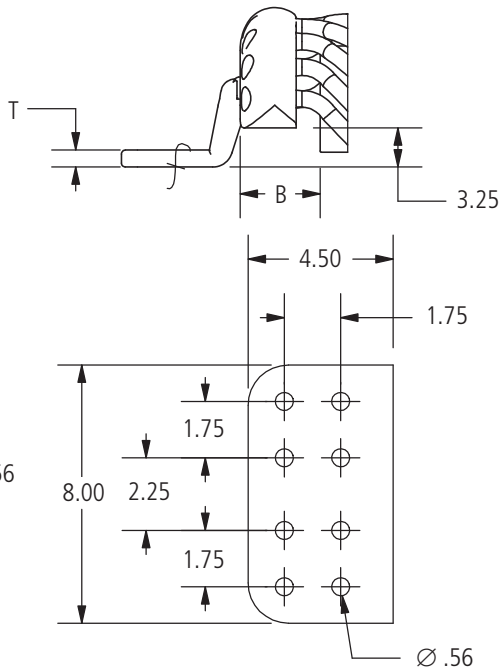

FIG. 3

© 2011, AFL, all rights reserved. PP-3-00175, Revision 1, 6.8.18
Specifications are subject to change without notice.

DOSSERT®

TYPE 33900, 34000 INLINE

Ordering Information

CATALOG NUMBER		CONDUCTOR SIZE	DIMENSIONS IN INCHES			FIG. NO.	NOMINAL WEIGHT IN LBS	
OFFSET TERMINAL	CENTER FORM TERMINAL		A	B	T		OFFSET TERMINAL	CENTER FORM TERMINAL
-	34008EEHV	3 SPS	30.59	3.75	1.00	1	-	26.1
-	34028EEHV	3 EHPS	30.59	3.75	1.00	1	-	26.0
-	34009EEHV	3 1/2 SPS	31.25	3.75	1.00	1	-	26.6
-	34029EEHV	3 1/2 EHPS	31.25	3.75	1.00	1	-	26.5
33910EEHV	34010EEHV	4 SPS	31.06	3.75	1.00	1	28.2	27.5
	34010GEHV	4 SPS	31.06	3.75	1.00	2	-	28.4
33930EEHV	34030EEHV	4 EHPS	31.06	3.75	1.00	1	28.1	27.4
33912EEHV	34012EEHV	5 SPS	31.06	3.75	1.00	1	26.3	26.6
33912GEHV	34012GEHV	5 SPS	31.06	3.75	1.00	2	26.3	26.6
33932EEHV	34032EEHV	5 EHPS	31.06	3.75	1.00	1	27.9	26.8
	34032GEHV	5 EHPS	31.97	3.75	1.13	2	-	28.5
-	34013EEHV	6 SPS	30.81	4.00	1.00	1	-	36.2
-	34013GEHV	6 SPS	30.81	4.00	1.13	2	-	39.7
-	34033EEHV	6 EHPS	32.09	4.00	1.00	1	-	36.1
-	34033-8N4-EHV	6 EHPS	30.81	4.00	1.00	3	-	37.2

© 2011, AFL, all rights reserved. PP-3-00175, Revision 1, 6.8.18
Specifications are subject to change without notice.

DOSSERT®
TYPE 38900-EHV



Expansion stud connector is designed to be corona free for 345 kV and 500 kV service. Laminated straps provide for 1.75" (44.5mm) expansion or contraction. Stainless steel static elimiator springs are supplied for slip fit end of corona ring assembly. Dimension "D" shown in illustration is for installation temperature of 68°F (20°C); for other installation temperatures, see Index/General Info section.

Material
Aluminum Alloy

Hardware
Yellow anodized aluminum nuts, bolts, and lockwashers.

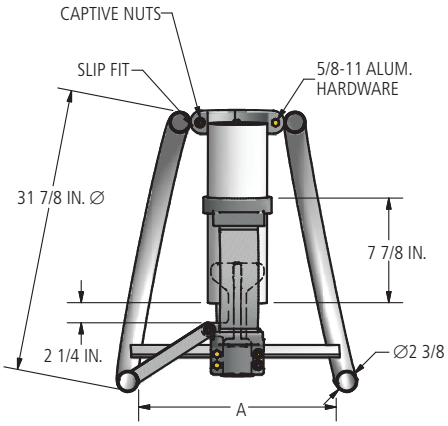

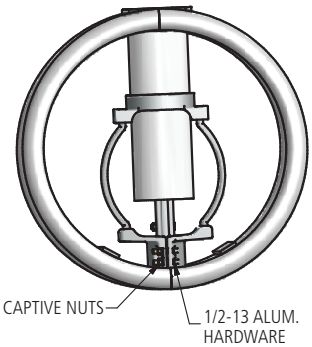

Ordering Information

CONDUCTOR SIZE	STUD SIZE		CATALOG NUMBERS		DIMENSIONS IN INCHES A		NOMINAL WEIGHT
	DIAMETER IN INCHES	THREADS PER INCH	17" DIA. DOME	22" DIA. DOME	17" DIA. DOME	22" DIA. DOME	
3 SPS	1 1/8	12	38908.11 EHV	38928.11 EHV	18.62	22.12	36.2
3 1/2 SPS	1 1/8	12	38909.11 EHV	38929.11 EHV	18.62	22.12	37.2
4 SPS	1 1/8	12	38910.11 EHV	38930.11 EHV	18.62	22.12	41.9
3 SPS	1 1/2	12	38908.14 EHV	38928.14 EHV	18.62	22.12	38.2
3 1/2 SPS	1 1/2	12	38909.14 EHV	38929.14 EHV	18.62	22.12	39.2
4 SPS	1 1/2	12	38910.14 EHV	38930.14 EHV	18.62	22.12	43.9
5 SPS	1 1/2	12	38912.14 EHV	38932.14 EHV	18.62	22.12	48.1
4 SPS	2	12	38910.20 EHV	38930.20 EHV	18.62	22.12	46.1
4 EHPS	2	12	38920.20 EHV	38940.20 EHV	18.62	22.12	46.0
5 SPS	2	12	38912.20 EHV	38932.20 EHV	18.62	22.12	50.3
5 EHPS	2	12	38922.20 EHV	38942.20 EHV	18.62	22.12	50.2
6 SPS	2	12	38913.20 EHV	38933.20 EHV	18.62	22.12	55.4
6 EHPS	2	12	38923.20 EHV	38943.20 EHV	18.62	22.12	55.3
4 SPS	2 1/2	12	38910.24 EHV	38930.24 EHV	18.62	22.12	47.2
4 EHPS	2 1/2	12	38920.24 EHV	38940.24 EHV	18.62	22.12	47.1
5 SPS	2 1/2	12	38912.24 EHV	38932.24 EHV	18.62	22.12	51.4
5 EHPS	2 1/2	12	38922.24 EHV	38942.24 EHV	18.62	22.12	51.3
6 SPS	2 1/2	12	38913.24 EHV	38933.24 EHV	18.62	22.12	56.5
6 EHPS	2 1/2	12	38923.24 EHV	38943.24 EHV	18.62	22.12	56.4

© 2011, AFL, all rights reserved. PP-3-00200, Revision 0, 3.9.11
Specifications are subject to change without notice.

DOSSERT®

TYPE WEPI-AA, WEPI-30-AA, WEPI-45-AA, WEPI-60-AA

Aluminum Welded Pipe Elbow

Welded elbows offer an economical method for field fabrication where angular turns are required. Designed for 500 kV service. Elbows are designed with chamfer to provide ease of welding.



WEPI-AA

Material

Aluminum Alloy

Notes

- For a 30°, add '-30'; for a 45°, add '-45'; and for a 60°, add '-60' to catalog number. Ex: WEPI75-45-AA
- For Schedule 80, add 'E' to pipe size. Ex: WEPI75E-AA

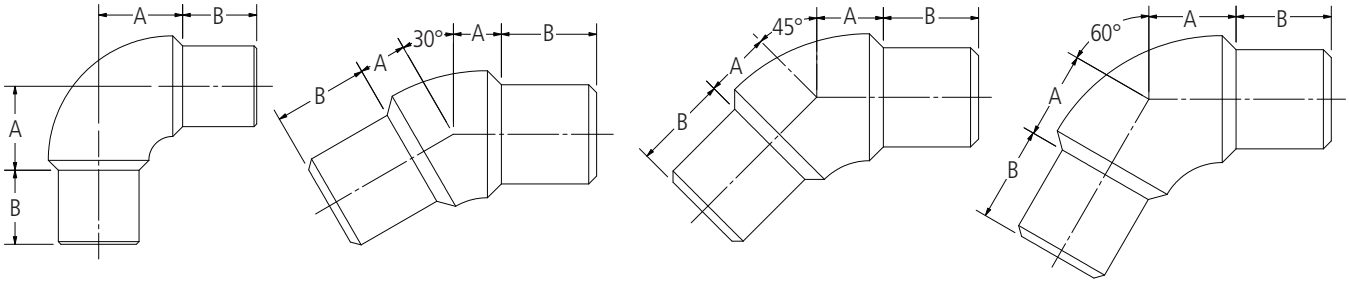

WEPI-AA WEPI-30-AA WEPI-45-AA WEPI-60-AA

Ordering Information

S.P.S.	CATALOG NO. SCHEDULE 40	ANGLE	DIMENSION IN INCHES A	DIMENSION IN INCHES B	E.H.P.S.	CATALOG NO. SCHEDULE 80	ANGLE	DIMENSION IN INCHES A	DIMENSION IN INCHES B
3/4	WEPI75-AA	90°	1.11	0.75	3/4	WEPI75E-AA	90°	1.00	0.75
3/4	WEPI75-30-AA	30°	0.38	0.75	—	—	—	—	—
3/4	WEPI75-45-AA	45°	0.52	0.75	3/4	WEPI75E-45-AA	45°	0.56	0.75
3/4	WEPI75-60-AA	60°	0.69	0.75	—	—	—	—	—
1	WEPI100-AA	90°	1.19	0.75	1	WEPI100E-AA	90°	1.23	0.75
1	WEPI100-30-AA	30°	0.44	0.75	1	WEPI100E-30-AA	30°	0.48	0.75
1	WEPI100-45-AA	45°	0.58	0.75	1	WEPI100E-45-AA	45°	0.63	0.75
1	WEPI100-60-AA	60°	0.75	0.75	1	WEPI100E-60-AA	60°	0.80	0.75
1 1/4	WEPI125-AA	90°	1.38	1.00	1 1/4	WEPI125E-AA	90°	1.42	1.00
1 1/4	WEPI125-30-AA	30°	0.50	1.00	1 1/4	WEPI125E-30-AA	30°	0.56	1.00
1 1/4	WEPI125-45-AA	45°	0.68	1.00	1 1/4	WEPI125E-45-AA	45°	0.73	1.00
1 1/4	WEPI125-60-AA	60°	0.87	1.00	1 1/4	WEPI125E-60-AA	60°	0.92	1.00
1 1/2	WEPI150-AA	90°	1.57	1.00	1 1/2	WEPI150E-AA	90°	1.63	1.00
1 1/2	WEPI150-30-AA	30°	0.56	1.00	1 1/2	WEPI150E-30-AA	30°	0.63	1.00
1 1/2	WEPI150-45-AA	45°	0.76	1.00	1 1/2	WEPI150E-45-AA	45°	0.83	1.00
1 1/2	WEPI150-60-AA	60°	0.99	1.00	1 1/2	WEPI150E-60-AA	60°	1.05	1.00

© 2011, AFL, all rights reserved. PP-3-00524, Revision 3, 9.5.18
Specifications are subject to change without notice.

DOSSERT®

TYPE WEPI-AA, WEPI-30-AA, WEPI-45-AA, WEPI-60-AA

Aluminum Welded Pipe Elbow

Ordering Information

S.P.S.	CATALOG NO.	ANGLE	DIMENSION IN INCHES		E.H.P.S.	CATALOG NO.	ANGLE	DIMENSION IN INCHES	
	SCHEDULE 40		A	B		SCHEDULE 80		A	B
2	WEPI200-AA	90°	1.92	1.75	2	WEPI200E-AA	90°	1.98	1.75
2	WEPI200-30-AA	30°	0.64	1.75	2	WEPI200E-30-AA	30°	0.70	1.75
2	WEPI200-45-AA	45°	0.89	1.75	2	WEPI200E-45-AA	45°	0.96	1.75
2	WEPI200-60-AA	60°	1.17	1.75	2	WEPI200E-60-AA	60°	1.24	1.75
2 1/2	WEPI250-AA	90°	2.51	1.75	2 1/2	WEPI250E-AA	90°	2.54	1.75
2 1/2	WEPI250-30-AA	30°	0.78	1.75	2 1/2	WEPI250E-30-AA	30°	0.84	1.75
2 1/2	WEPI250-45-AA	45°	1.08	1.75	2 1/2	WEPI250E-45-AA	45°	1.14	1.75
2 1/2	WEPI250-60-AA	60°	1.42	1.75	2 1/2	WEPI250E-60-AA	60°	1.46	1.75
3	WEPI300-AA	90°	2.52	1.75	3	WEPI300E-AA	90°	2.56	1.75
3	WEPI300-30-AA	30°	0.89	1.75	3	WEPI300E-30-AA	30°	0.96	1.75
3	WEPI300-45-AA	45°	1.23	1.75	3	WEPI300E-45-AA	45°	1.31	1.75
3	WEPI300-60-AA	60°	1.52	1.75	3	WEPI300E-60-AA	60°	1.56	1.75
3 1/2	WEPI350-AA	90°	2.87	1.75	3 1/2	WEPI350E-AA	90°	2.96	1.75
3 1/2	WEPI350-30-AA	30°	0.95	1.75	3 1/2	WEPI350E-30-AA	30°	1.04	1.75
3 1/2	WEPI350-45-AA	45°	1.33	1.75	3 1/2	WEPI350E-45-AA	45°	1.42	1.75
3 1/2	WEPI350-60-AA	60°	1.76	1.75	3 1/2	WEPI350E-60-AA	60°	1.85	1.75
4	WEPI400-AA	90°	3.02	2.06	4	WEPI400E-AA	90°	3.08	2.06
4	WEPI400-30-AA	30°	1.12	2.00	4	WEPI400E-30-AA	30°	1.23	2.00
4	WEPI400-45-AA	45°	1.60	2.00	4	WEPI400E-45-AA	45°	1.70	2.00
4	WEPI400-60-AA	60°	1.81	2.06	4	WEPI400E-60-AA	60°	1.87	2.06
5	WEPI500-AA	90°	3.82	2.44	5	WEPI500E-AA	90°	3.94	2.44
5	WEPI500-30-AA	30°	1.24	2.44	5	WEPI500E-30-AA	30°	1.35	2.44
5	WEPI500-45-AA	45°	1.75	2.44	5	WEPI500E-45-AA	45°	1.87	2.44
5	WEPI500-60-AA	60°	2.33	2.44	5	WEPI500E-60-AA	60°	2.45	2.44
6	WEPI600-AA	90°	4.31	2.75	6	WEPI600E-AA	90°	4.38	2.75
6	WEPI600-30-AA	30°	1.29	2.75	6	WEPI600E-30-AA	30°	1.36	2.75
6	WEPI600-45-AA	45°	1.89	2.75	6	WEPI600E-45-AA	45°	1.97	2.75
6	WEPI600-60-AA	60°	2.57	2.75	6	WEPI600E-60-AA	60°	2.64	2.75
8	WEPI800-AA	90°	5.64	1.00	—	—	—	—	—
8" O.D.	WEPI800R-AA	90°	5.50	2.00	—	—	—	—	—
8" O.D.	WEPI800R-30-AA	30°	1.88	2.00	—	—	—	—	—
8" O.D.	WEPI800R-60-AA	60°	3.38	2.00	—	—	—	—	—

© 2011, AFL, all rights reserved. PP-3-00524, Revision 3, 9.5.18
Specifications are subject to change without notice.

DOSSERT®

TYPE 35400, 35500

WeldElbows are designed to be corona free for 345 kV and 500 kV service. Elbow is designed to be welded on outside of pipe allowing use on both schedule 40 and schedule 80 pipe. Socket design allows for slight inaccuracies in field cut length of pipe.



35400

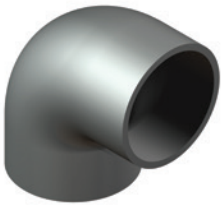

35500

Material

Aluminum Alloy

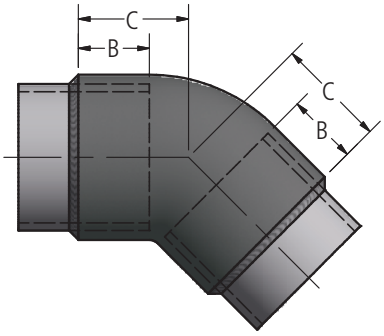

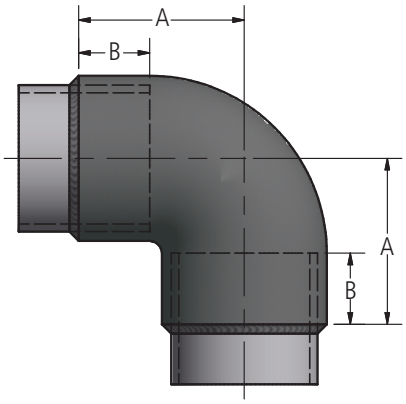

Ordering Information

CATALOG NUMBER		CONDUCTOR SIZE SPS/EPHS	DIMENSIONS IN INCHES			NOMINAL WEIGHT LBS	
45 DEG	90 DEG		A	B	C	45 DEG	90 DEG
35408EHV	35508EHV	3	4.16	1.75	2.75	1.8	2.4
35409EHV	35509EHV	3 1/2	4.72	2.00	3.12	2.6	3.6
35410EHV	35510EHV	4	5.28	2.25	3.50	3.6	4.8
35412EHV	35512EHV	5	6.44	2.75	4.28	5.8	7.8
35413EHV	35513EHV	6	7.59	3.25	5.05	9.4	12.8

© 2011, AFL, all rights reserved. PP-3-00194, Revision 0, 3.4.11
Specifications are subject to change without notice.

DOSSERT®
TYPE WGPHV-AA



Ground Jumper

Welded ground stud is designed to be corona free for 345 kV and 500 kV service. Design of ground studs is such that then can be welded to 3" through 6" SPS pipe size.

Material

Aluminum Alloy

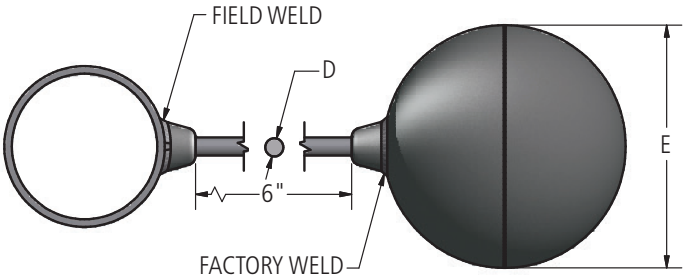

Ordering Information

CATALOG NUMBER	SPS / EHPS	DIMENSIONS IN INCHES	
		D	E
WGPHV250-AA	2 1/2	3/4	8
WGPHV300-AA	3	3/4	8
WGPHV300-12-AA	3	3/4	12
WGPHV350-AA	3.5	3/4	8
WGPHV400-AA	4	3/4	8
WGPHV400-10-AA	4	3/4	10
WGPHV400-12-R87-AA	4	7/8	12
WGPHV500-AA	5	3/4	10
WGPHV500-10-AA	5	3/4	12
WGPHV500-R81-AA	5	13/16	10
WGPHV600-AA	6	3/4	10
WGPHV600-12-AA	6	3/4	12
WGPHV600-R81-AA	6	13/16	10
WGPHV800-AA	8	3/4	13
WGPHV800R-AA	8 O.D.	3/4	13

© 2011, AFL, all rights reserved. PP-3-00526, Revision 0, 3.4.11
Specifications are subject to change without notice.

DOSSERT®
TYPE 34600-EHV



Bolted ground stud is designed to be corona free for 345 kV and 500 kV service as noted in table. Bolted design provides ease of removal for future expansion or relocation.

Material

Aluminum Alloy

Hardware

Yellow anodized aluminum bolts, nuts, and lockwashers.

Notes

- For Stainless Steel bolts, lockwashers and Everdur nuts, add "-SSHBN" to catalog number. EX: 34668EHV-SSHBN

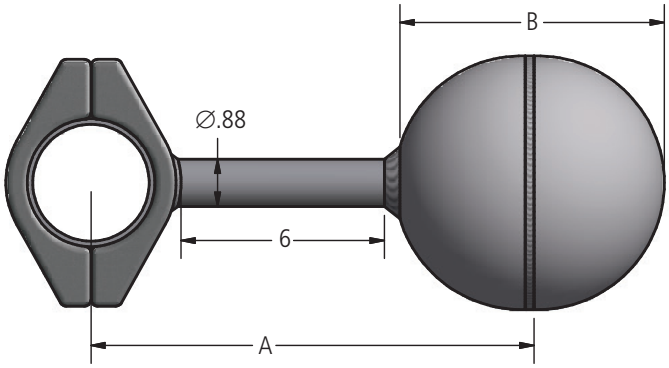

Ordering Information

CATALOG NUMBER	SPS / EHPS	DIMENSIONS IN INCHES		NOMINAL WEIGHT LBS
		A	B	
345 KV				
34668 EHV	3	16.31	7.06	5.2
34669 EHV	3 1/2	16.56	7.06	5.3
34670 EHV	4	16.81	7.06	5.5
34672 EHV	5	17.34	7.06	5.8
34673 EHV	6	17.87	7.06	6.4
500 KV				
34688 EHV	3	21.25	12	13.3
34689 EHV	3 1/2	21.50	12	13.4
34690 EHV	4	21.75	12	13.6
34692 EHV	5	22.28	12	13.9
34693 EHV	6	22.81	12	14.5

© 2011, AFL, all rights reserved. PP-3-00182, Revision 1, 9.20.18
Specifications are subject to change without notice.

DOSSERT®
TYPE 34650-EHV



Bolted conductor ground stud is designed to have better corona characteristics than the conductor on which it is installed. Designed for 500 kV service. Bolted design provides ease of removal for future expansion or relocation. Ground stud is ordered by specifying catalog number and conductor.

Material
Aluminum Alloy

Hardware
Yellow anodized aluminum bolts, nuts, and lockwashers.

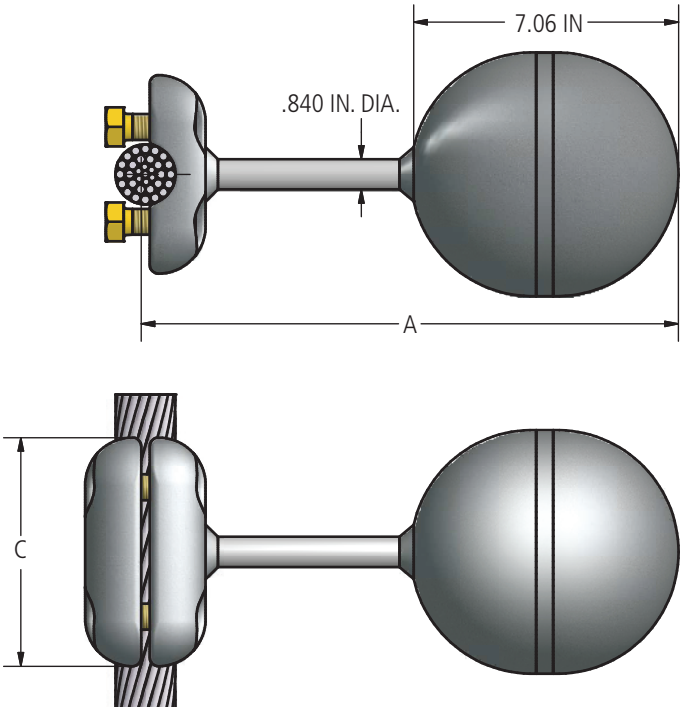

Ordering Information

CATALOG NUMBER	MAX CONDUCTOR DIAMETER	DIMENSIONS IN INCHES			NOMINAL WEIGHT LBS
		A	C	BOLT SIZE	
34653EHV	1.226	15.25	5.00	5/8	7.8
34654EHV	1.475	15.38	5.50	5/8	8.8
34655EHV	1.850	15.75	5.75	3/4	13.3

© 2011, AFL, all rights reserved. PP-3-00185, Revision 1, 10.31.11
Specifications are subject to change without notice.

DOSSERT®

TYPE 34620-EHV

Ground stud is designed to be corona free for 345 kV or 500 kV service, as noted in table, when pad covers are used to shield terminal hardware.



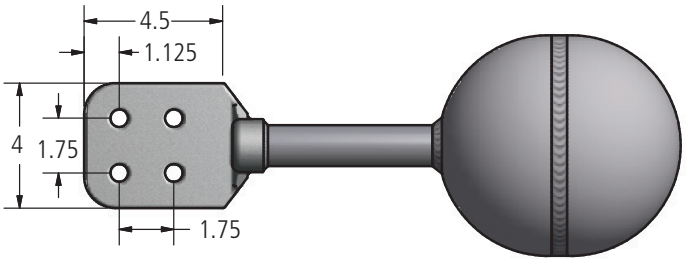

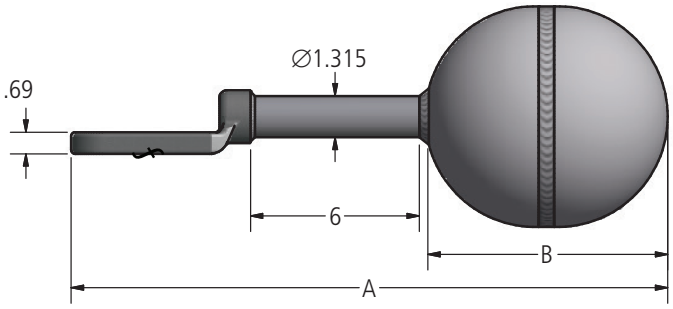

Ordering Information

CATALOG NUMBER	DIMENSIONS IN INCHES		VOLTAGE RATING	NOMINAL WEIGHT LBS
	A	B		
34620EHV	21.50	7.06	345 kV	4.7
34625EHV	26.19	12.00	500 kV	13.6

© 2011, AFL, all rights reserved. PP-3-00183, Revision 12, 12.4.13
Specifications are subject to change without notice.

DOSSERT®
TYPE 1800-REHV



Spacer is designed to be corona free for 500 kV service. Spacer is supplied with break-away head bolts to ensure correct installation.

Material
Aluminum Alloy

Hardware
Yellow anodized aluminum nuts, bolts and lockwashers.

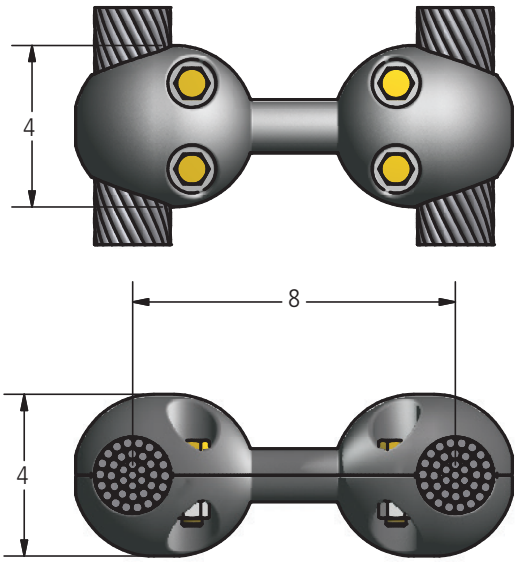

Ordering Information

CATALOG NUMBER	CABLE RANGE			NOMINAL WEIGHT LBS
	DIAMETER	AAC	ACSR	
1800.08REHV	1.438 - 1.518	1590	1431 (54/19) - 1590 (45/7)	3.4
1801.08REHV	1.519 - 1.599	1750	1590 (54/19)	3.4
1802.08REHV	1.600 - 1.680	2000	1780 (84/19)	3.0
1803.08REHV	1.681 - 1.762	2250	2034 (72/7) - 2156 (84/19)	3.0
1804.08REHV	1.763 - 1.843	2500	2312 (76/19)	3.0

© 2011, AFL, all rights reserved. PP-3-00164, Revision 1, 10.3.12
Specifications are subject to change without notice.

DOSSERT®
TYPE CAS-V-AA



Cable Spacer for Two Cables

Spacer is designed to be corona free for 500 kV service. Spacer is supplied with break-away head bolts to ensure correct installation.

Material

Aluminum Alloy

Hardware

Yellow anodized aluminum nuts, bolts, lockwashers, and rubber retainers.

Notes

- For Stainless Steel bolts, lockwashers and Everdur nuts, add "-SSHBN" to catalog number. EX: CAS300-6-V-AA-SSHBN.
- For Grade Five Galvanized Steel Hardware, add "-GS5" to catalog number. EX: CAD300-6-V-AA-GS5.
- 6"-8" Spacing uses a solid cast body instead of welded tube.

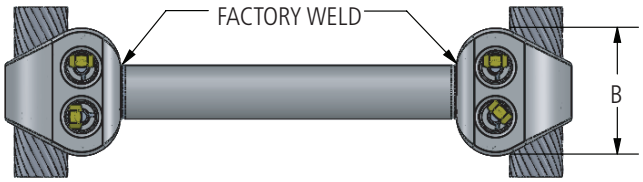

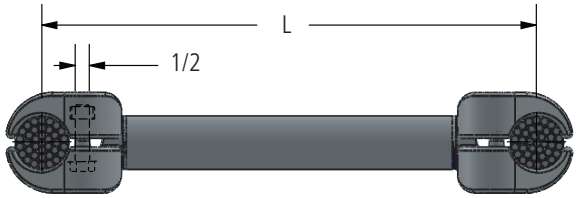

Ordering Information

CATALOG NUMBER	CABLE RANGE			DIMENSIONS IN INCHES		NO. OF BOLTS
	MIN	MAX	ACSR	B	L	
CAS79-6-V-AA	750 MCM	795 MCM	636 (18/1; 24/7; 26/7)	2	6	2
CAS79-6.5-V-AA	750 MCM	795 MCM	636 (18/1; 24/7; 26/7)	2	6 1/2	2
CAS79-7-V-AA	750 MCM	795 MCM	636 (18/1; 24/7; 26/7)	2	7	2
CAS79-8-V-AA	750 MCM	795 MCM	636 (18/1; 24/7; 26/7)	2	8	2
CAS79-12-V-AA	750 MCM	795 MCM	636 (18/1; 24/7; 26/7)	2	12	2
CAS79-18-V-AA	750 MCM	795 MCM	636 (18/1; 24/7; 26/7)	2	18	2
CAS95-6-V-AA	800 MCM	954 MCM	795 (45/7; 24/7; 26/7)	2	6	2
CAS95-6.5-V-AA	800 MCM	954 MCM	795 (45/7; 24/7; 26/7)	2	6 1/2	2
CAS95-7-V-AA	800 MCM	954 MCM	795 (45/7; 24/7; 26/7)	2	7	2
CAS95-7.5-V-AA	800 MCM	954 MCM	795 (45/7; 24/7; 26/7)	2	7.5	2
CAS95-8-V-AA	800 MCM	954 MCM	795 (45/7; 24/7; 26/7)	2	8	2
CAS95-10-V-AA	800 MCM	954 MCM	795 (45/7; 24/7; 26/7)	2	10	2
CAS95-11-V-AA	800 MCM	954 MCM	795 (45/7; 24/7; 26/7)	2	11	2
CAS95-12-V-AA	800 MCM	954 MCM	795 (45/7; 24/7; 26/7)	2	12	2
CAS95-18-V-AA	800 MCM	954 MCM	795 (45/7; 24/7; 26/7)	2	18	2
CAS103-6-V-AA	1000 MCM	1033.5 MCM	954 (45/7; 54/7)	2	6	2
CAS103-8-V-AA	1000 MCM	1033.5 MCM	954 (45/7; 54/7)	2	8	2

© 2011, AFL, all rights reserved. PP-3-00271, Revision 2, 2.8.18
Specifications are subject to change without notice.

DOSSERT®
TYPE CAS-V-AA
Cable Spacer for Two Cables

Ordering Information (cont.)

CATALOG NUMBER	CABLE RANGE			DIMENSIONS IN INCHES		NO. OF BOLTS
	MIN	MAX	ACSR	B	L	
CAS103-9-V-AA	1000 MCM	1033.5 MCM	954 (45/7; 54/7)	2	9	2
CAS103-10-V-AA	1000 MCM	1033.5 MCM	954 (45/7; 54/7)	2	10	2
CAS103-12-V-AA	1000 MCM	1033.5 MCM	954 (45/7; 54/7)	2	12	2
CAS103-18-V-AA	1000 MCM	1033.5 MCM	954 (45/7; 54/7)	2	18	2
CAS127-6-V-AA	1113 MCM	1272 MCM	1033 (54/7), 1113 (45/7; 54/19)	4 1/2	6	4
CAS127-6.5-V-AA	1113 MCM	1272 MCM	1033 (54/7), 1113 (45/7; 54/19)	4 1/2	6 1/2	4
CAS127-8-V-AA	1113 MCM	1272 MCM	1033 (54/7) 1113 (45/7; 54/19)	4 1/2	8	4
CAS127-12-V-AA	1113 MCM	1272 MCM	1033 (54/7), 1113 (45/7; 54/19)	4 1/2	12	4
CAS127-16-V-AA	1113 MCM	1272 MCM	1033 (54/7), 1113 (45/7; 54/19)	4 1/2	16	4
CAS127-18-V-AA	1113 MCM	1272 MCM	1033 (54/7), 1113 (45/7; 54/19)	4 1/2	18	4
CAS143-6-V-AA	1300 MCM	1431 MCM	1272 (45/7; 54/19)	4 1/2	6	4
CAS143-6.5-V-AA	1300 MCM	1431 MCM	1272 (45/7; 54/19)	4 1/2	6 1/2	4
CAS143-8-V-AA	1300 MCM	1431 MCM	1272 (45/7; 54/19)	4 1/2	8	4
CAS143-12-V-AA	1300 MCM	1431 MCM	1272 (45/7; 54/19)	4 1/2	12	4
CAS143-13-V-AA	1300 MCM	1431 MCM	1272 (45/7; 54/19)	4 1/2	13	4
CAS143-18-V-AA	1300 MCM	1431 MCM	1272 (45/7; 54/19)	4 1/2	18	4
CAS160-6.5-V-AA	1500 MCM	1600 MCM, 1272 Rope L.	1431 (45/7; 54/19)	4 1/2	6 1/2	4
CAS160-8-V-AA	1500 MCM	1600 MCM, 1272 Rope L.	1431 (45/7; 54/19)	4 1/2	8	4
CAS160-9-V-AA	1500 MCM	1600 MCM, 1272 Rope L.	1431 (45/7; 54/19)	4 1/2	9	4
CAS160-11-V-AA	1500 MCM	1600 MCM, 1272 Rope L.	1431 (45/7; 54/19)	4 1/2	11	4
CAS160-12-V-AA	1500 MCM	1600 MCM, 1272 Rope L.	1431 (45/7; 54/19)	4 1/2	12	4
CAS160-18-V-AA	1500 MCM	1600 MCM, 1272 Rope L.	1431 (45/7; 54/19)	4 1/2	18	4
CAS180-6-V-AA	1700 MCM	1800 MCM	1590 (45/7; 54/19)	4 1/2	6	4
CAS180-7-V-AA	1700 MCM	1800 MCM	1590 (45/7; 54/19)	4 1/2	7	4
CAS180-8-V-AA	1700 MCM	1800 MCM	1590 (45/7; 54/19)	4 1/2	8	4
CAS180-11-V-AA	1700 MCM	1800 MCM	1590 (45/7; 54/19)	4 1/2	11	4
CAS180-12-V-AA	1700 MCM	1800 MCM	1590 (45/7; 54/19)	4 1/2	12	4
CAS180-18-V-AA	1700 MCM	1800 MCM	1590 (45/7; 54/19)	4 1/2	18	4
CAS205-6-V-AA	2000 MCM	2049 ACAR	1780 (84/19) 2034.5 (72/7)	4 1/2	6	4
CAS205-8-V-AA	2000 MCM	2049 ACAR	1780 (84/19) 2034.5 (72/7)	4 1/2	8	4
CAS205-12-V-AA	2000 MCM	2049 ACAR	1780 (84/19) 2034.5 (72/7)	4 1/2	12	4
CAS205-13-V-AA	2000 MCM	2049 ACAR	1780 (84/19) 2034.5 (72/7)	4 1/2	13	4
CAS205-15-V-AA	2000 MCM	2049 ACAR	1780 (84/19) 2034.5 (72/7)	4 1/2	15	4
CAS205-18-V-AA	2000 MCM	2049 ACAR	1780 (84/19) 2034.5 (72/7)	4 1/2	18	4
CAS205-24-V-AA	2000 MCM	2049 ACAR	1780 (84/19) 2034.5 (72/7)	4 1/2	24	4
CAS205-42-V-AA	2000 MCM	2049 ACAR	1780 (84/19) 2034.5 (72/7)	4 1/2	42	4

© 2011, AFL, all rights reserved. PP-3-00271, Revision 2, 2.8.18
Specifications are subject to change without notice.

DOSSERT®
TYPE CAS-V-AA
Cable Spacer for Two Cables

Ordering Information (cont.)

CATALOG NUMBER	CABLE RANGE			DIMENSIONS IN INCHES		NO. OF BOLTS
	MIN	MAX	ACSR	B	L	
CAS205-43-V-AA	2000 MCM	2049 ACAR	1780 (84/19) 2034.5 (72/7)	4 1/2	43	4
CAS250-6.5-V-AA	2250 MCM	2500 MCM	2156 (84/19) 2300 (96/19)	4 1/2	6 1/2	4
CAS250-8-V-AA	2250 MCM	2500 MCM	2156 (84/19) 2300 (96/19)	4 1/2	8	4
CAS250-10-V-AA	2250 MCM	2500 MCM	2156 (84/19) 2300 (96/19)	4 1/2	10	4
CAS250-12-V-AA	2250 MCM	2500 MCM	2156 (84/19) 2300 (96/19)	4 1/2	12	4
CAS250-13-V-AA	2250 MCM	2500 MCM	2156 (84/19) 2300 (96/19)	4 1/2	13	4
CAS250-15.5-V-AA	2250 MCM	2500 MCM	2156 (84/19) 2300 (96/19)	4 1/2	15 1/2	4
CAS250-18-V-AA	2250 MCM	2500 MCM	2156 (84/19) 2300 (96/19)	4 1/2	18	4
CAS275-8-V-AA	—	2750 MCM	2515 (76/19)	4 1/2	8	4
CAS275-13-V-AA	—	2750 MCM	2515 (76/19)	4 1/2	13	4
CAS275-18-V-AA	—	2750 MCM	2515 (76/19)	4 1/2	18	4
CAS300-8-V-AA	2750 MCM	3000 MCM	—	4 1/2	8	4
CAS300-18-V-AA	2750 MCM	3000 MCM	—	4 1/2	18	4
CAS300-20-V-AA	2750 MCM	3000 MCM	—	4 1/2	20	4
CAS350-6-V-AA	3500 MCM	3500 MCM	—	5 1/2	6	4
CAS350-8-V-AA	3500 MCM	3500 MCM	—	5 1/2	8	4
CAS350-13-V-AA	3500 MCM	3500 MCM	—	5 1/2	13	4

© 2011, AFL, all rights reserved. PP-3-00271, Revision 2, 2.8.18
Specifications are subject to change without notice.

DOSSERT®

TYPE CAS-N-V-AA, CAS-N-90-V-AA

Cable Spacer for Two Cables with Four-Hole NEMA Tap

Spacer is designed to be corona free for 500 kV service. Spacer is supplied with break-away head bolts to ensure correct installation. Not for full load tap. For lightning arresters and other Metering taps.



CAS-N-V-AA



CAS-N-90-V-AA

Material

Aluminum Alloy

Hardware

Aluminum bolts, lockwashers and nuts

Notes

- For Stainless Steel bolts, lockwashers and nuts, add "-SSHBN" to catalog number. EX: CAS78-18-4N4-90-V-AA-SSHBN
- For a 90° terminal, add suffix "-90" to catalog number. EX: CAS79-18-4N4-90-V-AA

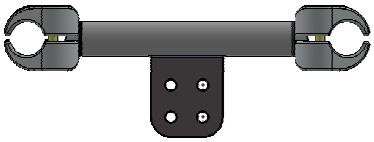

CAS-N-V-AA

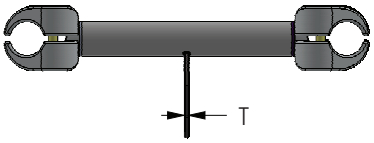

CAS-N-90-V-AA

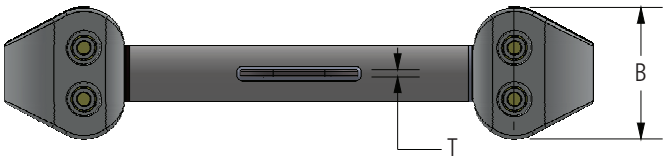

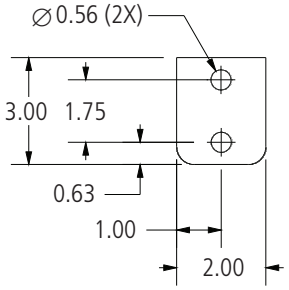

2N PAD

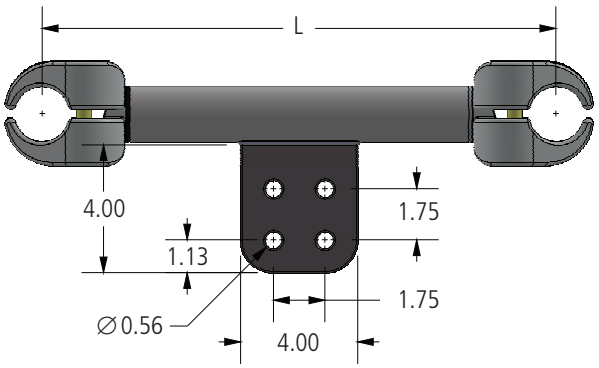

4N4 PAD

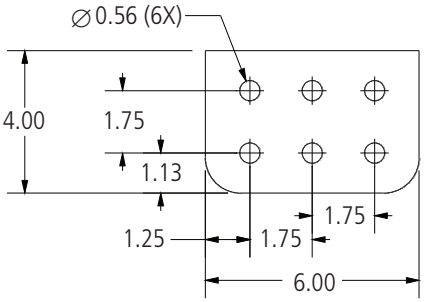

6N4 PAD

© 2011, AFL, all rights reserved. PP-3-00268, Revision 3, 1.29.19
Specifications are subject to change without notice.

DOSSERT®

TYPE CAS-N-V-AA, CAS-N-90-V-AA

Cable Spacer for Two Cables with Four-Hole NEMA Tap

Ordering Information

CATALOG NUMBER		CABLE RANGE		DIMENSIONS IN INCHES			NO. OF BOLTS
		AAC RANGE	ACSR	B	L	T	
CAS79-6-4N4-V-AA	CAS79-6-4N4-90-V-AA	750 MCM - 795 MCM	636 (18/1)(24/7)(26/7)	2.00	6.00	0.50	2
CAS79-8-4N4-V-AA	CAS79-8-4N4-90-V-AA	750 MCM - 795 MCM	636 (18/1)(24/7)(26/7)	2.00	8.00	0.50	2
CAS79-10-4N4-V-AA	CAS79-10-4N4-90-V-AA	750 MCM - 795 MCM	636 (18/1)(24/7)(26/7)	2.00	10.00	0.50	2
CAS79-12-4N4-V-AA	CAS79-12-4N4-90-V-AA	750 MCM - 795 MCM	636 (18/1)(24/7)(26/7)	2.00	12.00	0.50	2
CAS79-18-4N4-V-AA	CAS79-18-4N4-90-V-AA	750 MCM - 795 MCM	636 (18/1)(24/7)(26/7)	2.00	18.00	0.50	2
CAS95-6-4N4-V-AA	CAS95-6-4N4-V-AA	800 MCM - 954 MCM	795 (47/7)(24/7)(26/7)	2.00	6.00	0.50	2
CAS95-8-2N-V-AA	CAS95-8-2N-90-V-AA	800 MCM - 954 MCM	795 (47/7)(24/7)(26/7)	2.00	8.00	0.50	2
CAS95-8-4N4-V-AA	CAS95-8-4N4-90-V-AA	800 MCM - 954 MCM	795 (47/7)(24/7)(26/7)	2.00	8.00	0.50	2
CAS95-10-4N4-V-AA	CAS95-10-4N4-90-V-AA	800 MCM - 954 MCM	795 (47/7)(24/7)(26/7)	2.00	10.00	0.50	2
CAS95-12-4N4-V-AA	CAS95-12-4N4-90-V-AA	800 MCM - 954 MCM	795 (47/7)(24/7)(26/7)	2.00	12.00	0.50	2
CAS95-18-4N4-V-AA	CAS95-18-4N4-90-V-AA	800 MCM - 954 MCM	795 (47/7)(24/7)(26/7)	2.00	18.00	0.50	2
CAS103-6-4N4-V-AA	CAS103-6-4N4-90-V-AA	1000 MCM - 1033.5 MCM	954 (45/7)(54/7)	2.00	6.00	0.50	2
CAS103-8-4N4-V-AA	CAS103-8-4N4-90-V-AA	1000 MCM - 1033.5 MCM	954 (45/7)(54/7)	2.00	8.00	0.50	2
CAS103-10-4N4-V-AA	CAS103-10-4N4-V-AA	1000 MCM - 1033.5 MCM	954 (45/7)(54/7)	2.00	10.00	0.50	2
CAS103-12-4N4-V-AA	CAS103-12-4N4-90-V-AA	1000 MCM - 1033.5 MCM	954 (45/7)(54/7)	2.00	12.00	0.50	2
CAS103-18-4N4-V-AA	CAS103-18-4N4-90-V-AA	1000 MCM - 1033.5 MCM	954 (45/7)(54/7)	2.00	18.00	0.50	2
CAS127-6-4N4-V-AA	CAS127-6-4N4-90-V-AA	1113 MCM - 1272 MCM	1033 (54/7), 1113 (45/7) (54/19)	4.50	6.00	0.75	4
CAS127-8-4N4-V-AA	CAS127-8-4N4-90-V-AA	1113 MCM - 1272 MCM	1033 (54/7), 1113 (45/7) (54/19)	4.50	8.00	0.75	4
CAS127-10-4N4-V-AA	CAS127-10-4N4-90-V-AA	1113 MCM - 1272 MCM	1033 (54/7), 1113 (45/7) (54/19)	4.50	10.00	0.75	4
CAS127-12-4N4-V-AA	CAS127-12-4N4-90-V-AA	1113 MCM - 1272 MCM	1033 (54/7), 1113 (45/7) (54/19)	4.50	12.00	0.75	4
CAS127-18-4N4-V-AA	CAS127-18-4N4-90-V-AA	1113 MCM - 1272 MCM	1033 (54/7), 1113 (45/7) (54/19)	4.50	18.00	0.75	4
CAS140-8-4N4-V-AA	CAS140-8-4N4-90-V-AA	1300 MCM-1400 MCM	1272 (45/7)(54/19)	4.50	8.00	0.75	4
CAS140-18-4N4-V-AA	CAS140-18-4N4-90-V-AA	1300 MCM-1400 MCM	1272 (45/7)(54/19)	4.50	18.00	0.75	4
CAS143-6-4N4-V-AA	CAS143-6-4N4-90-V-AA	1300 MCM - 1431 MCM	1272 (45/7)(54/19)	4.50	6.00	0.63	4
CAS143-8-4N4-V-AA	CAS143-8-4N4-90-V-AA	1300 MCM - 1431 MCM	1272 (45/7)(54/19)	4.50	8.00	0.75	4
CAS143-10-4N4-V-AA	CAS143-10-4N4-90-V-AA	1300 MCM - 1431 MCM	1272 (45/7)(54/19)	4.50	10.00	0.75	4
CAS143-12-4N4-V-AA	CAS143-12-4N4-90-V-AA	1300 MCM - 1431 MCM	1272 (45/7)(54/19)	4.50	12.00	0.75	4
CAS143-18-4N4-V-AA	CAS143-18-4N4-90-V-AA	1300 MCM - 1431 MCM	1272 (45/7)(54/19)	4.50	18.00	0.75	4
CAS160-6-4N4-V-AA	CAS160-6-4N4-90-V-AA	1500 MCM - 1600 MCM	1431 (45/7)(54/19)	4.50	6.00	0.75	4
CAS160-6.5-4N4-V-AA	CAS160-6.5-4N4-90-V-AA	1500 MCM - 1600 MCM	1431 (45/7)(54/19)	4.50	6.50	0.75	4
CAS160-8-4N4-V-AA	CAS160-8-4N4-90-V-AA	1500 MCM - 1600 MCM	1431 (45/7)(54/19)	4.50	8.00	0.75	4
CAS160-10-4N4-V-AA	CAS160-10-4N4-90-V-AA	1500 MCM - 1600 MCM	1431 (45/7)(54/19)	4.50	10.00	0.75	4
CAS160-11-4N4-V-AA	CAS160-11-4N4-90-V-AA	1500 MCM - 1600 MCM	1431 (45/7)(54/19)	4.50	11.00	0.75	4

© 2011, AFL, all rights reserved. PP-3-00268, Revision 3, 1.29.19
Specifications are subject to change without notice.

DOSSERT®

TYPE CAS-N-V-AA, CAS-N-90-V-AA

Cable Spacer for Two Cables with Four-Hole NEMA Tap

Ordering Information

CATALOG NUMBER		CABLE RANGE		DIMENSIONS IN INCHES			NO. OF BOLTS
		AAC RANGE	ACSR	B	L	T	
CAS160-12-4N4-V-AA	CAS160-12-4N4-90-V-AA	1500 MCM - 1600 MCM	1431 (45/7)(54/19)	4.50	12.00	0.75	4
CAS160-18-4N4-V-AA	CAS160-18-4N4-90-V-AA	1500 MCM - 1600 MCM	1431 (45/7)(54/19)	4.50	18.00	0.75	4
CAS180-6-4N4-V-AA	CAS180-6-4N4-90-V-AA	1700 MCM - 1800 MCM	1590 (45/7)(54/19)	4.50	6.00	0.75	4
CAS180-8-4N4-V-AA	CAS180-8-4N4-90-V-AA	1700 MCM - 1800 MCM	1590 (45/7)(54/19)	4.50	8.00	0.75	4
CAS180-10-4N4-V-AA	CAS180-10-4N4-90-V-AA	1700 MCM - 1800 MCM	1590 (45/7)(54/19)	4.50	10.00	0.75	4
CAS180-12-4N4-V-AA	CAS180-12-4N4-90-V-AA	1700 MCM - 1800 MCM	1590 (45/7)(54/19)	4.50	12.00	0.75	4
CAS180-18-4N4-V-AA	CAS180-18-4N4-90-V-AA	1700 MCM - 1800 MCM	1590 (45/7)(54/19)	4.50	18.00	0.75	4
CAS200-8-4N4-V-AA	CAS200-8-4N4-90-V-AA	2000 MCM	1780(84/19)	4.50	8.00	0.75	4
CAS200-18-4N4-V-AA	CAS200-18-4N4-90-V-AA	2000 MCM	1780(84/19)	4.50	18.00	0.75	4
CAS205-6-4N4-V-AA	CAS205-6-4N4-90-V-AA	2000 MCM - 2049 MCM	1780 (84/19) 2034 (72/7)	4.50	6.00	0.75	4
CAS205-8-4N4-V-AA	CAS205-8-4N4-90-V-AA	2000 MCM - 2049 MCM	1780 (84/19) 2034 (72/7)	4.50	8.00	0.63	4
CAS205-10-4N4-V-AA	CAS205-10-4N4-90-V-AA	2000 MCM - 2049 MCM	1780 (84/19) 2034 (72/7)	4.50	10.00	0.75	4
CAS205-12-4N4-V-AA	CAS205-12-4N4-90-V-AA	2000 MCM - 2049 MCM	1780 (84/19) 2034 (72/7)	4.50	12.00	0.75	4
CAS205-13-4N4-V-AA	CAS205-13-4N4-90-V-AA	2000 MCM - 2049 MCM	1780 (84/19) 2034 (72/7)	4.50	13.00	0.75	4
CAS205-18-4N4-V-AA	CAS205-18-4N4-90-V-AA	2000 MCM - 2049 MCM	1780 (84/19) 2034 (72/7)	4.50	18.00	0.75	4
CAS250-6-4N4-V-AA	CAS250-6-4N4-90-V-AA	2250 MCM - 2500 MCM	2156 (84/19)	4.50	6.00	0.75	4
CAS250-8-4N4-V-AA	CAS250-8-4N4-90-V-AA	2250 MCM - 2500 MCM	2156 (84/19)	4.50	8.00	0.75	4
CAS250-10-4N4-V-AA	CAS250-10-4N4-90-V-AA	2250 MCM - 2500 MCM	2156 (84/19)	4.50	10.00	0.75	4
CAS250-12-4N4-V-AA	CAS250-12-4N4-90-V-AA	2250 MCM - 2500 MCM	2156 (84/19)	4.50	12.00	0.75	4
CAS250-18-4N4-V-AA	CAS250-18-4N4-90-V-AA	2250 MCM - 2500 MCM	2156 (84/19)	4.50	18.00	0.75	4
CAS250-18-4N41/2-V-AA	CAS250-18-4N4-90-V-AA	2250 MCM - 2500 MCM	2156 (84/19)	4.50	18.00	0.75	4
CAS275-6-4N4-V-AA	CAS275-6-4N4-90-V-AA	2650 MCM - 2750 MCM	2515 (76/19)	4.50	6.00	0.75	4
CAS275-8-4N4-V-AA	CAS275-8-4N4-90-V-AA	2650 MCM - 2750 MCM	2515 (76/19)	4.50	8.00	0.75	4
CAS275-10-4N4-V-AA	CAS275-10-4N4-90-V-AA	2650 MCM - 2750 MCM	2515 (76/19)	4.50	10.00	0.75	4
CAS275-12-4N4-V-AA	CAS275-12-4N4-90-V-AA	2650 MCM - 2750 MCM	2515 (76/19)	4.50	12.00	0.75	4
CAS275-12-4N71/4-V-AA	CAS275-12-4N7 1/4-90-V-AA	2650 MCM - 2750 MCM	2515 (76/19)	4.50	12.00	0.75	4
CAS275-18-4N4-V-AA	CAS275-18-4N4-90-V-AA	2650 MCM - 2750 MCM	2515 (76/19)	4.50	18.00	0.75	4
CAS350-6-4N4-V-AA	CAS350-6-4N4-90-V-AA	3500 MCM	—	5.48	6.00	0.75	4
CAS350-13-4N4-V-AA	CAS350-13-4N4-90-V-AA	3500 MCM	—	5.48	13.00	1.00	4
CAS350-13-6N4-V-AA	CAS350-13-6N4-90-V-AA	3500 MCM	—	5.48	13.00	1.00	4

© 2011, AFL, all rights reserved. PP-3-00268, Revision 3, 1.29.19
Specifications are subject to change without notice.

DOSSERT®
TYPE 38100-EHV

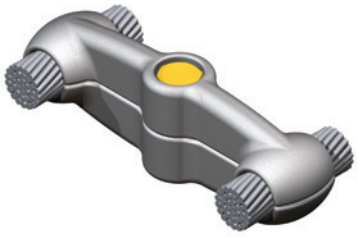

Spacer is designed to be corona free for 345 kV service. Single bolt spacer is supplied for 6.5" and 8" centerline spacing.

Material

Aluminum Alloy

Hardware

Yellow anodized aluminum bolts, nuts, and lockwashers.

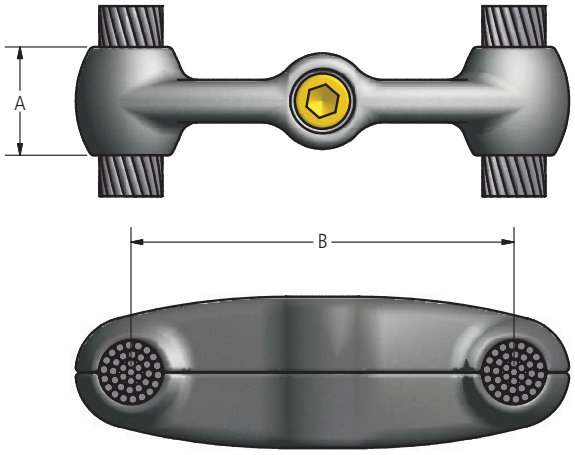

Ordering Information

CATALOG NUMBER	CABLE RANGE			DIMENSIONS IN INCHES		BOLT SIZE	NOMINAL WEIGHT LBS
	DIAMETER	AAC	ACSR	A	B		
38131EHV	.938 - 1.000	700 - 750	556.5(30/7) - 636(26/7)	1.66	6.50	5/8	1.7
38161EHV	.938 - 1.000	700 - 750	556.5(30/7) - 636(26/7)	1.66	8.00	5/8	2.7
38132EHV	1.001 - 1.062	795	636(30/19) - 795(36/1)	1.75	6.50	5/8	1.6
38162EHV	1.001 - 1.062	795	636(30/19) - 795(36/1)	1.75	8.00	5/8	1.9
38133EHV	1.063 - 1.125	900 - 954	795(45/7) - 795(24/7)	1.66	6.50	5/8	1.6
38163EHV	1.063 - 1.125	900 - 954	795(45/7) - 795(24/7)	1.66	8.00	5/8	1.9
38134EHV	1.126 - 1.187	1000 - 1033.5	795(30/19) - 954(45/7)	1.44	6.50	5/8	1.6
38164EHV	1.126 - 1.187	1000 - 1033.5	795(30/19) - 954(45/7)	1.44	8.00	5/8	1.6
38135EHV	1.188 - 1.250	1113	954(54/7) - 1033.5(54/7)	2.12	6.50	5/8	1.9
38165EHV	1.188 - 1.250	1113	954(54/7) - 1033.5(54/7)	2.12	8.00	5/8	2.0
38136EHV	1.251 - 1.312	1192.5 - 1272	1113(45/7) - 1192.5(45/7)	2.12	6.50	5/8	2.0
38166EHV	1.251 - 1.312	1192.5 - 1272	1113(45/7) - 1192.5(45/7)	2.12	8.00	5/8	1.9
38137EHV	1.313 - 1.375	1351.5 - 1351.5	1192.5(54/19) - 1272(45/7)	1.91	6.50	5/8	2.9
38167EHV	1.313 - 1.375	1351.5 - 1351.5	1192.5(54/19) - 1272(45/7)	1.91	8.00	5/8	2.0
38138EHV	1.376 - 1.437	1431 - 1510.5	1272(54/19) - 1431(45/7)	2.50	6.50	3/4	3.0
38168EHV	1.376 - 1.437	1431 - 1510.5	1272(54/19) - 1431(45/7)	2.50	8.00	3/4	3.0
38139EHV	1.438 - 1.500	1590	1431(54/19) - 1510.5(45/7)	2.50	6.50	3/4	3.4
38169EHV	1.438 - 1.500	1590	1431(54/19) - 1510.5(45/7)	2.50	8.00	3/4	3.6

© 2011, AFL, all rights reserved. PP-3-00197, Revision 1, 12.4.13
Specifications are subject to change without notice.

DOSSERT®
TYPE 38400-EHV, 38500-EHV

Spacers (Cable) Recommended for Voltages up to 500 kV

Bi-spacer is desigend to be corona free for 345 kV service for conductors through 1.5" diameter and 500 kV for larger diameter conductors. Tri-spacer is desgined to be corona free for 500 kV service. Bi-spacer is companion to 38200 series support. Tri-spacer is companion to 38300 series. Rigid spacers are not recommended for use on transmission lines.



38400-EHV



38500-EHV

Material

Aluminum Alloy

Hardware

Yellow anodized aluminum bolts, nuts, and lockwashers.

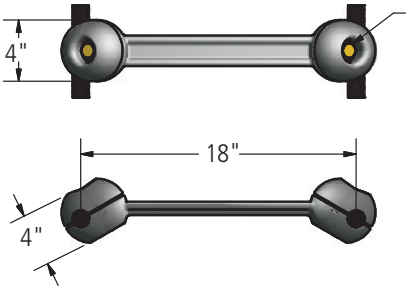

38400-EHV

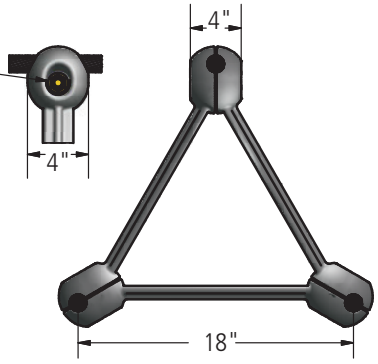

38500-EHV

Ordering Information

CATALOG NUMBER		CABLE RANGE			NOMINAL WEIGHT LBS	
BI-SPACER	TRI-SPACER	DIAMETER	AAC	ACSR	BI-SPACER	TRI-SPACER
38401EHV	38501EHV	1.001 - 1.062	795	636 (30/19) - 715 (26/7)	4.9	9.4
38402EHV	38502EHV	1.063 - 1.130	900 - 954	795 (45/7) - 795 (26/7)	5.1	10.0
38403EHV	38503EHV	1.131 - 1.196	1000 - 1033.5	900 (45/7) - 954 (54/7)	4.9	9.4
38404EHV	38504EHV	1.197 - 1.252	1113	1033 (45/7) - 1033 (54/7)	5.0	9.7
38405EHV	38505EHV	1.253 - 1.312	1192.5 - 1272	1113 (45/7) - 1192.5 (45/7)	5.0	9.7
38406EHV	38506EHV	1.313 - 1.375	1351.5	1192.5 (54/19) - 1272 (45/7)	5.0	9.7
38407EHV	38507EHV	1.376 - 1.437	1431 - 1510.5	1272 (54/19) - 1431 (45/7)	5.0	9.7
38408EHV	38508EHV	1.438 - 1.518	1590	1431 (54/19) - 1590 (45/7)	4.9	9.4
38409EHV	38509EHV	1.519 - 1.599	1750	1590 (54/19)	4.7	9.1
38410EHV	38510EHV	1.600 - 1.680	2000	1780 (84/19)	4.8	9.1
38411EHV	38511EHV	1.681 - 1.762	2250	2034 (72/7) - 2156 (84/19)	4.7	9.1
38412EHV	38512EHV	1.763 - 1.843	2500	2312 (76/19)	4.6	9.1

© 2011, AFL, all rights reserved. PP-3-00199, Revision 0, 3.7.11
Specifications are subject to change without notice.

DOSSERT®
TYPE 38300-EHV



Spacers (Cable) Recommended for Voltages up to 500 kV

Three-Conductor strain bus support is designed to be corona free for 500 kV service. Support is companion to 38500 series tri-spacer.

Material

Aluminum Alloy

Mounting Hardware

Yellow anodized aluminum bolts, nuts, and lockwashers.

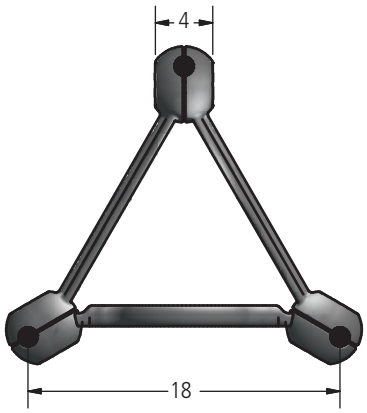

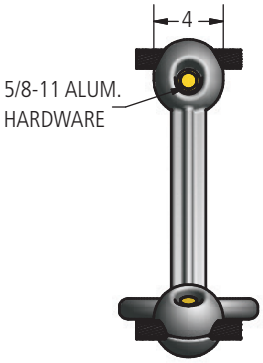



Ordering Information

CATALOG NUMBER		CABLE RANGE		
5" BOLT CIRCLE	7" BOLT CIRCLE	DIAMETER	AAC	ACSR
38301-5EHV	38301-7EHV	1.001 - 1.062	795	636 (30/19) - 715 (26/7)
38302-5EHV	38302-7EHV	1.063 - 1.130	900 - 954	795 (45/7) - 795 (26/7)
38303-5EHV	38303-7EHV	1.131 - 1.196	1000 - 1033.5	900 (45/7) - 954 (54/7)
38304-5EHV	38304-7EHV	1.197 - 1.252	1113	1033 (45/7) - 1033 (54/7)
38305-5EHV	38305-7EHV	1.253 - 1.312	1192.5 - 1272	1113 (45/7) - 1192.5 (45/7)
38306-5EHV	38306-7EHV	1.313 - 1.375	1351.5	1192.5 (54/19) - 1272 (45/7)
38307-5EHV	38307-7EHV	1.376 - 1.437	1431 - 1510.5	1272 (54/19) - 1431 (45/7)
38308-5EHV	38308-7EHV	1.438 - 1.518	1590	1431 (54/19) - 1590 (45/7)
38309-5EHV	38309-7EHV	1.519 - 1.599	1750	1590 (54/19)
38310-5EHV	38310-7EHV	1.600 - 1.680	2000	1780 (84/19)
38311-5EHV	38311-7EHV	1.681 - 1.762	2250	2034 (72/7) - 2156 (84/19)
38312-5EHV	38312-7EHV	1.763 - 1.843	2500	2312 (76/19)

© 2011, AFL, all rights reserved. PP-3-00198, Revision 0, 3.7.11
Specifications are subject to change without notice.

DOSSERT®

TYPE CSBE-V-AA, 4040-EHV, 6040-EHV

Designed to be corona free for 500 kV service.



CSBE-V-AA

Material

Aluminum Alloy

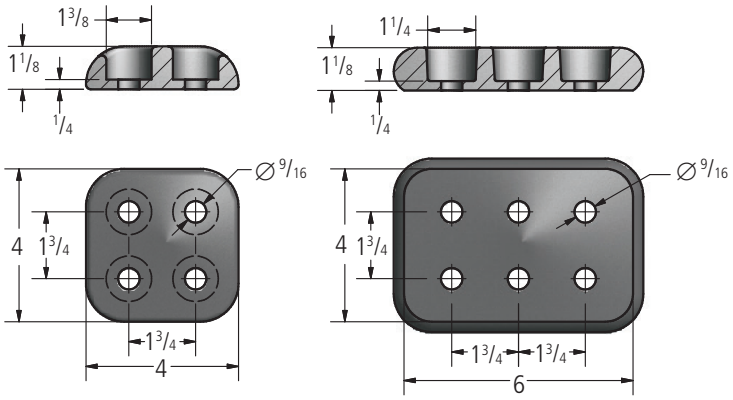

4040-EHV

6040-EHV

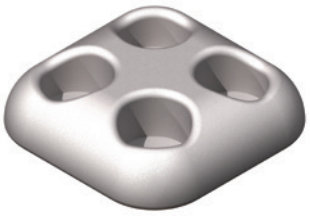

4040-EHV



6040-EHV

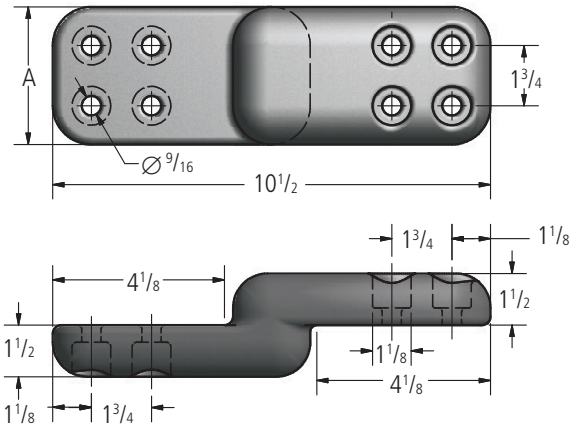

CSBE-4N4-V-AA

Ordering Information

CATALOG NUMBER	NUMBER OF HOLES	DIMENSIONS IN INCHES
		A
CSBE-4N4-V-AA	4	4
CSBE-6N4-V-AA	6	6
4040-EHV	4	-
6040-EHV	6	-

© 2011, AFL, all rights reserved. PP-3-00292, Revision 1, 12.4.13
Specifications are subject to change without notice.

DOSSERT®

TYPE PC-V-AA

Parallel Groove Clamp

Bolted parallel groove clamp is designed to have better corona characteristics than the conductors on which it is installed. Designed for 500 kV service.



Material

Aluminum Alloy

Hardware

Aluminum nuts, bolts and lockwashers.

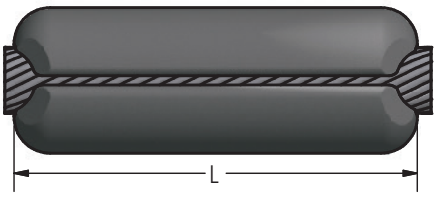

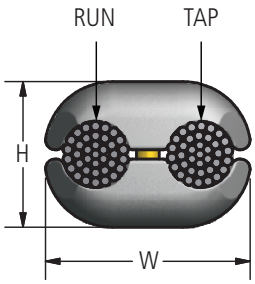

Ordering Information

CATALOG NUMBER	CONDUCTOR TYPE	CABLE RANGE RUN		CABLE RANGE TAP		DIMENSIONS IN INCHES			BOLT SIZE	NO. OF BOLTS
		MIN	MAX	MIN	MAX	L	H	W		
PC80-80-V-AA	AAC	795 MCM	800 MCM	795 MCM	800 MCM	7 1/4	3 1/4	3 3/4	1/2	3
	ACSR	715.5 (24/7)	795 (36/1)	715.5 (24/7)	795 (36/1)					
PC103-103-V-AA	AAC	900 MCM	1033.5 MCM	900 MCM	1033.5 MCM	7 1/4	3 1/4	4	1/2	3
	ACSR	795 (36,1)	954 (54,7)	795 (36,1)	954 (54,7)					
PC127-103-V-AA	AAC	1113 MCM	1113 MCM	1000 MCM	1033.5 MCM	7 1/4	3 1/4	4 1/4	1/2	3
	ACSR	1113 (54/19)	1113 (54/19)	954 (54,7)	954 (54,7)					
PC127-127-V-AA	AAC	1113 MCM	1272 MCM	1113 MCM	1272 MCM	7 1/4	3 1/4	4 3/8	1/2	3
	ACSR	1113 (45/7)	1113 (54/19)	1113 (45/7)	1113 (54/19)					
PC130-80-V-AA	AAC	1272 MCM	1351.5 MCM	795 MCM	800 MCM	7 1/4	3 1/4	4 1/8	1/2	3
PC130-130-V-AA	AAC	1272 MCM	1351.5 MCM	1272 MCM	1351.5 MCM	7 1/4	3 1/4	4 3/8	1/2	3
PC160-160-V-AA	AAC	1590 MCM	1600 MCM	1590 MCM	1600 MCM	8 3/4	3 1/2	4 3/4	5/8	3
	ACSR	1431 (54/19)	1510.5 (45/7)	1431 (54/19)	1510.5 (45/7)					
PC180-103-V-AA	AAC	1700 MCM	1800 MCM	900 MCM	1033.5 MCM	7 1/4	3 1/4	4 7/16	1/2	3
	ACSR	1590 (45/7)	1590 (54/19)	795 (36/1)	954 (54/7)					
PC180-127-V-AA	AAC	1700 MCM	1800 MCM	1113 MCM	1272 MCM	7 1/4	3 1/4	4 19/32	1/2	3
	ACSR	1590 (45/7)	1590 (54/19)	1113 (45/7)	1113 (54/19)					
PC205-65-V-AA	AAC	—	2000 MCM	600 MCM	650 MCM	7 1/4	3 3/8	4 3/8	1/2	3
	ACSR	1780 (84/19)	2034.5 (72/7)	477 (26/7)	556.5 (27/7)					
PC205-205-V-AA	AAC	—	2000 MCM	—	2000 MCM	8 3/4	3 1/2	5	5/8	3
	ACSR	1780 (84/19)	2034.5 (72/7)	1780 (84/19)	2034.5 (72/7)					
PC216A-216A-V-AA	AAC	2250 MCM	2500 MCM	2250 MCM	2500 MCM	11	4	5 1/2	5/8	4
	ACSR	2156 (84/19)	2167 (72/7)	2156 (84/19)	2167 (72/7)					

© 2011, AFL, all rights reserved. PP-3-00393, Revision 6, 3.24.2023
Specifications are subject to change without notice.

DOSSERT®

TYPE PC-V-AA

Parallel Groove Clamp

Ordering Information (cont.)

CATALOG NUMBER	CONDUCTOR TYPE	CABLE RANGE RUN		CABLE RANGE TAP		DIMENSIONS IN INCHES			BOLT SIZE	NO. OF BOLTS
		MIN	MAX	MIN	MAX	L	H	W		
PC275-275-V-AA	AAC	—	2750 MCM	—	2750 MCM	11	4 1/8	5 5/8	5/8	4
	ACSR	—	2515 (76/19)	—	2515 (76/19)					
PC350-80-V-AA	AAC	—	3500 MCM	795 MCM	800 MCM	7 1/4	3 13/16	4 11/16	5/8	3
	ACSR	—	—	715.5 (24/7)	795 (36/1)					
PC350-127-V-AA	AAC	—	3500 MCM	1113 MCM	1272 MCM	11	4 1/2	4 1/8	5/8	4
	ACSR	—	—	1113 (45/7)	1113 (54/19)					

© 2011, AFL, all rights reserved. PP-3-00393, Revision 6, 3.24.2023
Specifications are subject to change without notice.

DOSSERT®
TYPE 35600-EHV

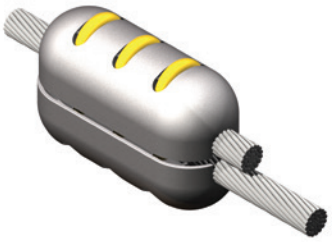

Parallel Groove Clamp

Bolted parallel groove clamp designed to have better corona characteristics than the conductors on which it is installed.

Material

Aluminum Alloy

Hardware

Yellow anodized aluminum nuts, U-bolts and lockwashers.

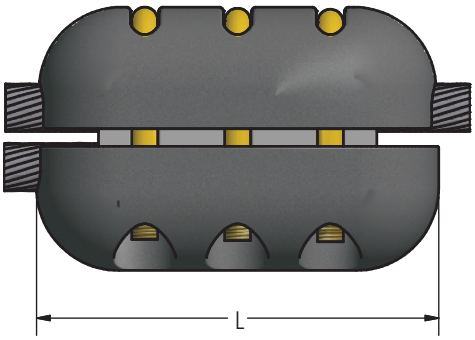

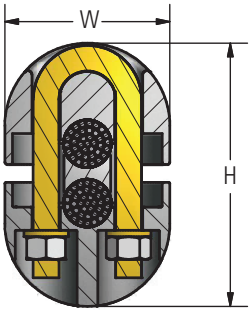

Ordering Information

CATALOG NUMBER	CONDUCTOR DIAMETER	DIMENSIONS IN INCHES			NO. OF BOLTS	NOMINAL WEIGHT LBS
		L	W	H		
35626 EHV	1.162	9.75	4.00	6.38	3	9.4
35627 EHV	1.569	11.75	5.00	6.94	3	14.5
35628 EHV	1.757	14.75	5.00	7.16	4	17.4

© 2011, AFL, all rights reserved. PP-3-00195, Revision 0, 3.4.11
Specifications are subject to change without notice.

DOSSERT®
TYPE SCB-F-V-AA



Stud Connector

The pad is finished on both sides. Can be furnished to accommodate stud diameters or threads per inch other than listed below. Designed for 500 kV service.

Material

Aluminum Alloy

Hardware

Yellow anodized aluminum nuts, bolts and lockwashers.

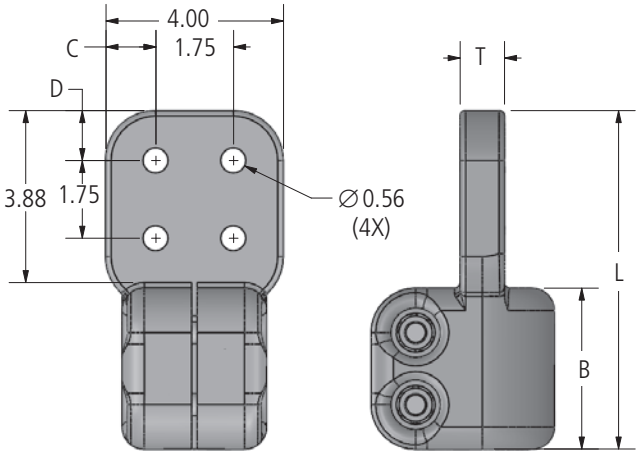

FIG. 1

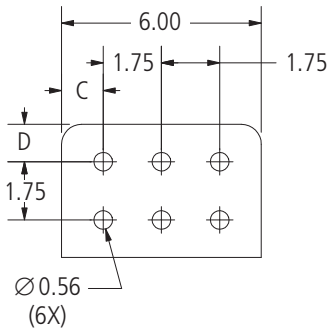

FIG. 2

Ordering Information

CATALOG NUMBER	FIG. NO.	STUD SIZE		DIMENSIONS IN INCHES					BOLT SIZE
		DIAMETER	THREADS PER INCH	B	C	D	L	T	
SCB112-1/2F-4N4-V-T12-AA	1	1.13	12	2.75	1.13	1.13	7.50	0.50	1/2
SCB175-1F-4N4-V-T12-AA	1	1.75	12	3.00	1.13	1.13	7.75	1.00	1/2
SCB150-3/4F-4N4-V-T12-AA	1	1.50	12	3.00	1.13	1.13	7.75	0.75	1/2
SCB200-3/4F-4N4-V-T12-AA	1	2.00	12	3.00	1.13	1.13	7.75	0.75	1/2
SCB197-3/4F-4N4-V-T0-AA	1	50 MM	0	3.00	1.13	1.13	7.75	0.75	1/2
SCB200-1F-4N4-V-T12-AA	1	2.00	12	3.00	1.13	1.13	7.75	1.00	1/2
SCB250-1F-6N4-V-T12-AA	2	2.50	12	3.25	1.25	1.13	7.94	1.00	1/2
SCB300-3/4F-4N4-V-T12-AA	1	3.00	12	3.88	1.13	1.13	8.13	0.75	1/2
SCB300-1F-4N4-V-T12-AA	1	3.00	12	3.25	1.13	1.13	8.13	1.00	1/2
SCB300-1F-6N4-V-T12-AA	2	3.00	12	3.25	1.25	1.13	8.13	1.00	1/2
SCB300-4.5B-1F-6N4-V-T12-AA	2	3.00	12	4.50	1.25	1.13	9.38	1.00	5/8
SCB315-1F-4N4-V-T0-AA	1	80 MM	0	3.50	1.13	1.13	8.13	1.00	1/2
SCB350-1.13F-4N4-V-T12-AA	1	3.50	12	3.50	1.13	1.13	8.38	1.13	5/8

© 2011, AFL, all rights reserved. PP-3-00449, Revision 3, 6.1.18
Specifications are subject to change without notice.

DOSSERT®

Type 2800-EHV, 5300-EHV

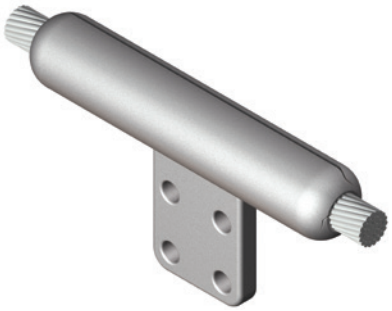

Substation tee connector is designed for limited space application as found in substations. Run length is shorter than conventional tee taps which saves space and allows faster installation. Tee tap is installed with standard AFL hex dies.

Material

Aluminum Alloy

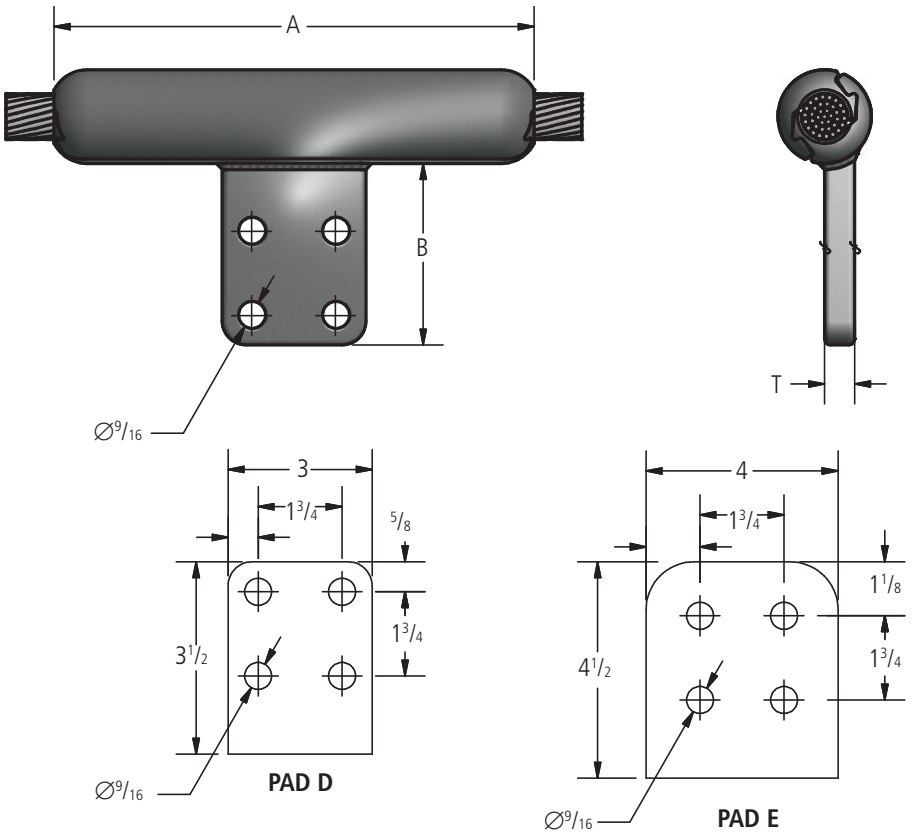

Ordering Information

CATALOG NUMBER	CONDUCTOR RANGE		DIE SIZE	ALTERNATE CATALOG NUMBER	ALTERNATE PAD SIZE	DIMENSIONS IN INCHES			NOMINAL WEIGHT
	DIAMETER	AAC				A	T	B	LBS
2830.1 EHV	1.021 - 1.196	795 - 1033.5 kcmil	30AH	2830.1E EHV	E	10.00	0.62	4.00	2.6
2834.1 EHV	1.140 - 1.319	1000 - 1300 kcmil	34AH	2834.1E EHV	E	11.50	0.62	4.00	3.4
2836.1 EHV	1.320 - 1.417	1351.5 - 1510.5 kcmil	36AH	2836.1E EHV	E	11.50	0.62	4.00	3.7
2838.1 EHV	1.412 - 1.500	1510.5 - 1590 kcmil	38AH	2838.1E EHV	E	12.00	0.62	4.00	4.3
2840.1 EHV	1.496 - 1.557	1750 kcmil	40AH	2840.1E EHV	E	12.50	0.62	4.00	4.8
2842.1 EHV	1.550 - 1.625	-	42AH	2842.1D EHV	D	14.00	0.75	4.50	6.4
2844.1 EHV	1.626 - 1.842	2250 - 2500 kcmil	44AH	2844.1D EHV	D	14.00	0.75	4.50	6.3
2848.1 EHV	1.843 - 1.996	2750 kcmil	48AH	2848.1D EHV	D	16.00	0.75	4.50	7.1

© 2011, AFL, all rights reserved. PP-3-00169, Revision 1, 12.4.13
Specifications are subject to change without notice.

DOSSERT®

Type 2900-EHV

Substation tee connector is designed for limited space application as found in substations. Designed for 500 kV service. Run and tap lengths are shorter than conventional tee connectors which saves space and minimizes birdcaging problems. Tee connector is installed with standard AFL hex dies.



Material

Aluminum Alloy

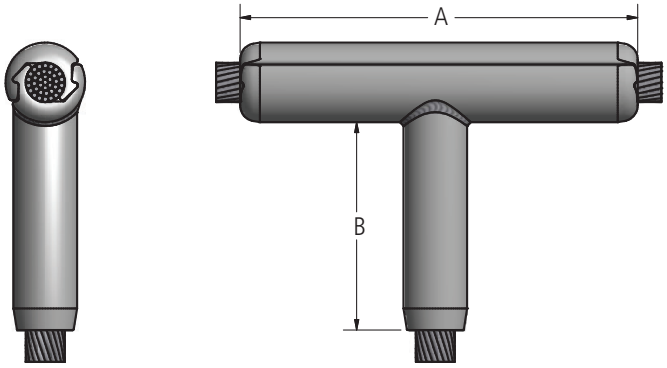

Ordering Information

CATALOG NUMBER	CONDUCTOR				DIMENSIONS IN INCHES		NOMINAL WEIGHT LBS	DIE SIZE
	RUN		TAP					
	DIAMETER	AAC RANGE	DIAMETER	AAC RANGE	A	B		
2930.1-30.1 EHV	1.021 - 1.196	795 - 1033.5	1.026 - 1.196	795 - 1033.5	10.00	5.67	2.9	30AH
2934.1-34.1 EHV	1.140 - 1.319	1000 - 1272	1.186 - 1.313	1113 - 1272	11.30	6.03	4.1	34AH
2936.1-36.1 EHV	1.340 - 1.417	1351.5 - 1510.5	1.314 - 1.399	1351.5 - 1431	11.50	6.29	4.6	36AH
2938.1-38.1 EHV	1.412 - 1.500	1510.5 - 1590	1.399 - 1.500	1510.5 - 1590	12.00	6.55	5.4	38AH
2940.1-40.1 EHV	1.496 - 1.557	1750.0	1.501 - 1.630	1750 - 2000	12.50	7.02	6.1	40AH
2942.1-42.1 EHV	1.550 - 1.625	-	1.630 - 1.681	2000	14.00	7.29	7.2	42AH
2944.1-44.1 EHV	1.626 - 1.717	2000 - 2250	1.630 - 1.681	2000	14.00	7.74	7.9	44AH
2944.2-44.2 EHV	1.718 - 1.842	2250 - 2500	1.669 - 1.823	2000 - 2500	15.00	7.74	8.1	44AH
2948.1-48.1 EHV	1.843 - 1.998	2750 - 3000	1.823 - 1.998	2500 - 3000	16.00	8.77	9.4	48AH

© 2011, AFL, all rights reserved. PP-3-00170, Revision 0, 3.10.11
Specifications are subject to change without notice.

DOSSERT®

TYPE 5400

Tee Connector—Closed Run Compression for Stranded AAC and ACSR Conductions

Designed for 500 kV service.



Material

Aluminum Alloy Lockwashers

Notes

Join the partial catalog numbers shown for the run and branch conductors.
EX: 5436.147-347.138

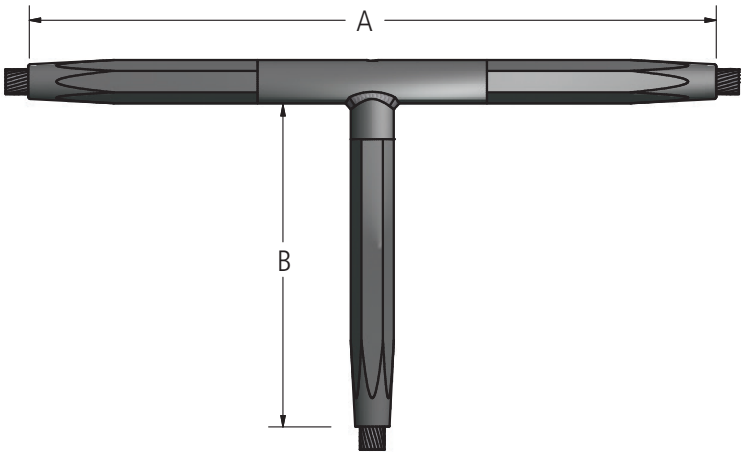

Ordering Information

RUN CONDUCTOR				
CATALOG NUMBER	CONDUCTOR RANGE		DIMENSIONS IN INCHES	DIE SIZE
	AAC	ACSR	A	
5430.109	795-800	715.5(24/7)-795(36/1)	19.12	30AH
5430.116	900	795(45/7)-795(26/7)	19.12	30AH
5430.122	954-1033.5	795(30/19)-954(36/1)	19.12	30AH
5430.125	—	954(54/7)-1033.5(36/1)	19.12	30AH
5434.128	1113	1033.5(45/7)-1033.5(54/7)	20.12	34AH
5434.138	1272	1113(54/19)-1192.5(45/7)	20.12	34AH
5436.144	1351.5-1431	1192.5(54/19)-1272(45/7)	21.00	36AH
5436.147	1500-1510.5	1272(54/19)-1351.5(45/7)	21.00	36AH
5438.156	1590	1431(54/19)-1510.5(45/7)	21.88	38AH
5440.162	1750	1510.5(54/19)-1590(54/19)	22.75	40AH
5442.178	2000	1780(84/19)-2034.5(72/7)	23.62	42AH
5444.184	2338 ACAR	2156(72/7)	26.75	44AH
5444.188	2500	2312(76/19)	26.75	44AH

BRANCH CONDUCTOR				
CATALOG NUMBER	CONDUCTOR RANGE		DIMENSIONS IN INCHES	DIE SIZE
	AAC	ACSR	B	
-30.109	795-800	715.5(24/7)-795(36/1)	9.44	30AH
-30.116	900	795(45/7)-795(26/7)	9.44	30AH
-30.122	954-1033.5	795(30/19)-954(36/1)	9.44	30AH
-30.125	—	954(54/7)-1033.5(36/1)	9.44	30AH
-34.128	1113	1033.5(45/7)-1033.5(54/7)	10.06	34AH
-34.138	1272	1113(54/19)-1192.5(45/7)	10.06	34AH
-36.144	1351.5-1431	1192.5(54/19)-1272(45/7)	10.62	36AH
-36.147	1500-1510.5	1272(54/19)-1351.5(45/7)	10.62	36AH
-38.156	1590	1431(54/19)-1510.5(45/7)	10.62	38AH
-40.162	1750	1510.5(54/19)-1590(54/19)	11.75	40AH
-42.178	2000	1780(84/19)-2034.5(72/7)	12.38	42AH
-44.184	2338 ACAR	2156(72/7)	12.00	44AH
-44.188	2500	2312(76/19)	12.00	44AH

© 2011, AFL, all rights reserved. PP-3-00204, Revision 1, 4.2.14
Specifications are subject to change without notice.

DOSSERT®

TYPE 5500

Tee Connector – Open Run – Compression for Stranded EC & ACSR Conductors



Designed for 500 kV service.

Material

Aluminum Alloy

To order combine Run conductor catalog number with Branch catalog number.

XXXX.X - XX.XXX

- XXXX.X: Run conductor catalog number
- XX.XXX: Branch conductor catalog number

Example: for 795(36/1) Run conductor to 795(26/7)
Branch conductor order 5530.3 -30.116

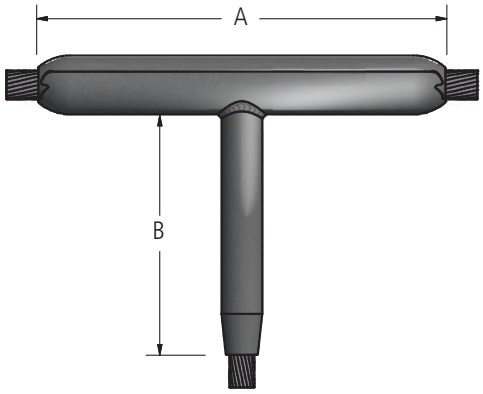

Ordering Information

RUN CONDUCTOR						
CATALOG NUMBER	CONDUCTOR RANGE			DIMENSIONS IN INCHES	NOMINAL WEIGHT	DIE SIZE
	DIAMETER	AAC	ACSR	A		
5530.3	1.021-1.196	795-1033.5	715.5(24/7)-1033.5(36/1)	19.12	3.3	30AH
5534.3	1.197-1.319	1113-1300	1033.5(54/7)-1192.5(45/7)	20.12	4.5	34AH
5536.3	1.320-1.417	1351.5-1510.5	1192.5(54/19)-1351.5(45/7)	21.00	5.0	36AH
5538.3	1.412-1.500	1500-1590	1351.5(54/9)-1510.5(45/7)	21.88	5.9	38AH
5540.3	1.496-1.557	1750	1510.5(54/19)-1590(54/19)	22.75	6.6	40AH
5542.3	1.550-1.625	-	1780(84/19)	23.62	7.7	42AH
5544.3	1.626-1.842	2000-2500	2034(72/7)2312(76/19)	26.75	6.8	44AH

© 2011, AFL, all rights reserved. PP-3-00205, Revision 0, 3.10.11
Specifications are subject to change without notice.

DOSSERT®

TYPE 5500

Tee Connector – Open Run – Compression for Stranded EC & ACSR Conductors

Ordering Information

BRANCH CONDUCTOR					
CATALOG NUMBER	CONDUCTOR RANGE		DIMENSIONS IN INCHES	NOMINAL WEIGHT	DIE SIZE
	AAC	ACSR	B		
-30.109	795-800	715.5(24/7)-795(36/1)	1.7	9.44	30AH
-30.116	900	795(45/7)-795(26/7)	1.7	9.44	30AH
-30.122	954-1033.5	795(30/19)-954(36/1)	1.7	9.44	30AH
-30.125	-	954(54/7)-1033.5(36/1)	1.7	10.06	30AH
-34.128	1113	1033.5(45/7)-1033.5(54/7)	2.2	10.06	34AH
-34.138	1272	1113(54/19)-1192.5(45/7)	2.2	10.06	34AH
-36.144	1351.5-1431	1192.5(54/19)-1272(45/7)	2.5	10.62	36AH
-36.147	1500-1510.5	1272(54/19)-1351.5(45/7)	2.5	10.62	36AH
-38.156	1590	1431(54/19)-1510.5(45/7)	3.0	11.19	38AH
-40.162	1750	1510.5(54/19)-1590(54/19)	3.4	11.75	40AH
-42.178	2000	1780(84/19)-2034.5(72/7)	3.9	12.38	42AH
-44.184	2338 ACAR	2156(72/7)	4.0	12.00	44AH
-44.188	2500	2312(76/19)	4.0	12.00	44AH

© 2011, AFL, all rights reserved. PP-3-00205, Revision 0, 3.10.11
Specifications are subject to change without notice.

DOSSERT®

TYPE 5000-EHV

Jumper Connector-Compression



The 5000 Series Jumper Connector is designed for AAC conductors. The jumper connector is fabricated from AFL seamless drawn aluminum. All jumper connectors are designed for limited tension use, maintaining a minimum of 40% of the ASTM rated strength of the conductor on which it is being used.

Material

Aluminum Alloy

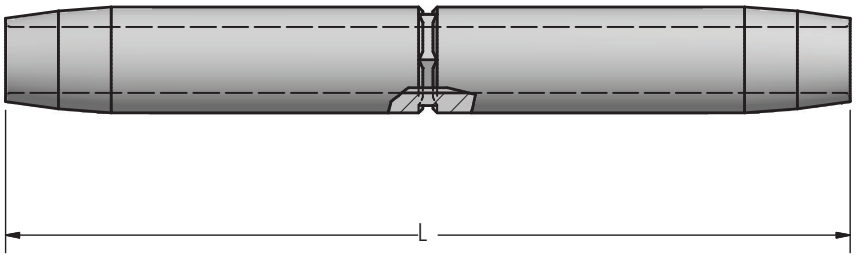

Ordering Information

CONDUCTOR SIZE			CATALOG NUMBER	DIE SIZE	NOMINAL WEIGHT	DIMENSION IN INCHES
KCM	STRAND					
	AL.	ST.			LBS	L
795.0	37 & 61	-	5030.109	30AH	2.1	13
795.0	26	7	5030.116	30AH	2.0	13
954.0	37 & 61	-	5030.122	30AH	1.8	13
954.0	45	7	5030.122	30AH	1.8	13
954.0	54	7	5030.125	30AH	1.8	13
1033.5	45	7	5034.128	34AH	2.8	14
1113.0	61	-	5034.128	34AH	2.8	14
1192.5	45	7	5034.138	34AH	2.5	14
1272.0	45	7	5036.144	36AH	3.2	15
1351.5	45	7	5036.147	36AH	3.1	15
1590.0	61 & 91	-	5038.156	38AH	3.8	16
1590.0	45	7	5040.162	40AH	4.5	17
1780.0	84	19	5042.178	42AH	4.6	17
2156.0	84	19	5044.184	44AH	5.1	17
2500.0	91	-	5044.188	44AH	5.0	17

© 2011, AFL, all rights reserved. PP-3-00202, Revision 0, 3.10.11
Specifications are subject to change without notice.

DOSSERT®

TYPE 2500-EHV

Substation Compression Dead Ends for Stranded EC and ACSR Conductors

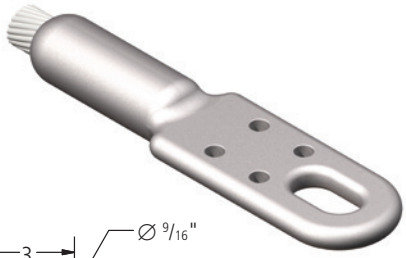

Substation dead end is designed for limited tension applications as found in substations. Designed for 500 kV service. Unique one piece design combines dead end barrel and terminal pad into single compact assembly. Dead end is installed with standard AFL hex dies. Terminal pad is standard NEMA pad size.

Material

Aluminum Alloy

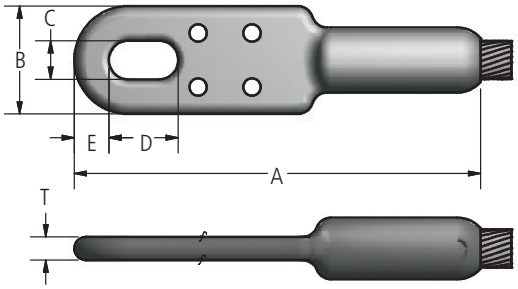

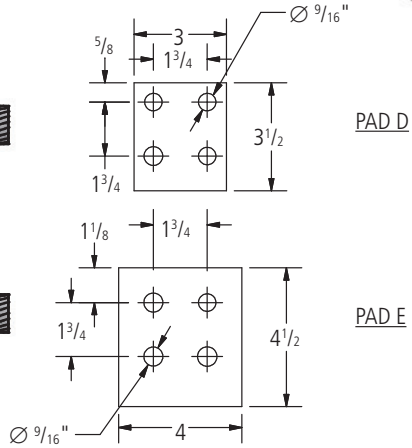

Ordering Information

CATALOG NUMBER	CONDUCTOR DIAMETER RANGE IN INCHES	AAC RANGE	ACSR RANGE	PAD SIZE	DIE SIZE	RATED STRENGTH	NOMINAL WEIGHT
						LBS	
2530.1-EHV	1.026 - 1.196	795 - 1033.5	715.5(24/7) - 954(54/7)	D	30 AH	6800	2.8
2534.1-EHV	1.186 - 1.313	1113-1272	1033.5(36/1)-1192.5(45/7)	D	34 AH	6800	3.3
2536.1-EHV	1.314 - 1.399	1300-1431	1192.5(54/19) - 1351.5(45/7)	D	36 AH	9000	3.8
2538.1-EHV	1.399 - 1.500	1351.5-1590	1351.5(45/7) - 1510.5(45/7)	D	38 AH	9000	3.7
2540.1-EHV	1.501 - 1.630	1750 - 2000	1510.5(54/19) - 1780(84/19)	D	40 AH	9000	4.3
2544.1-EHV	1.630 - 1.681	2000	2034(72/7)	E	44 AH	10000	6.9
2544.2-EHV	1.669 - 1.823	2250 - 2500	2034(72/7) - 2312(76/19)	E	44 AH	10000	6.7
2548.1-EHV	1.823 - 1.996	2500 - 2750	2515(76/19)	E	48 AH	10000	7.3
2548.2-EHV	1.996 - 2.158	3000-3500	-	E	48 AH	10000	6.9

CATALOG NUMBER	DIMENSION IN INCHES					
	A	B	C	D	E	T
2530.1-EHV	13.20	3.50	1.25	2.25	1.50	.75
2534.1-EHV	13.81	3.50	1.25	2.25	1.50	.75
2536.1-EHV	14.21	3.50	1.25	2.25	1.50	1.00
2538.1-EHV	14.53	3.50	1.25	2.25	1.50	1.00
2540.1-EHV	14.75	3.50	1.25	2.25	1.50	1.00
2544.1-EHV	17.45	4.12	1.35	2.50	1.63	1.13
2544.2-EHV	17.45	4.12	1.35	2.50	1.63	1.13
2548.1-EHV	17.68	4.12	1.35	2.50	1.63	1.13
2548.2-EHV	17.68	4.12	1.35	2.50	1.63	1.13

© 2011, AFL, all rights reserved. PP-3-00165, Revision 1, 9.12.14
Specifications are subject to change without notice.

DOSSERT®

Type 2700-EHV, 2600-EHV

Substation straight terminals are designed for limited space applications as found in substations. Terminals are shorter than conventional terminals which saves space and allows for faster installation. Terminals are installed with standard AFL hex dies. Terminals can be supplied pre-filled if required.



2600-EHV



2700-EHV

Material

Aluminum Alloy

Notes

- For Pre-filled Terminals, add "P" to catalog number. EX: 2734.1EHVP
- For Electro Tin Plate, add "-SN" to catalog number. EX: 2734.1EHV-SN
- Other pad sizes can be custom ordered.

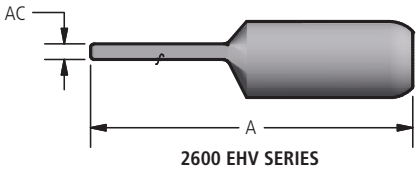

2600 EHV SERIES

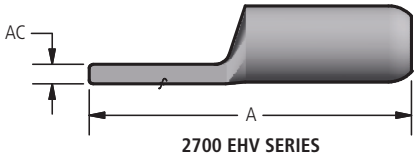

2700 EHV SERIES

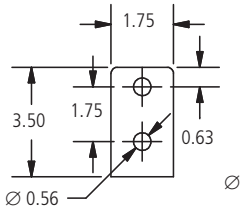

PAD B

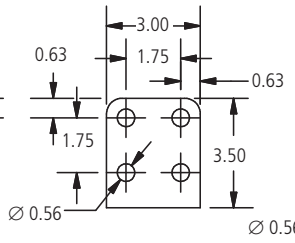

PAD D

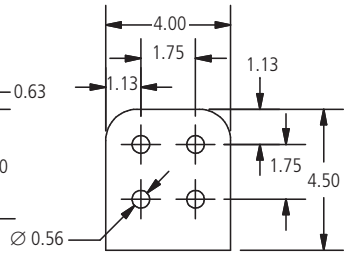

PAD E

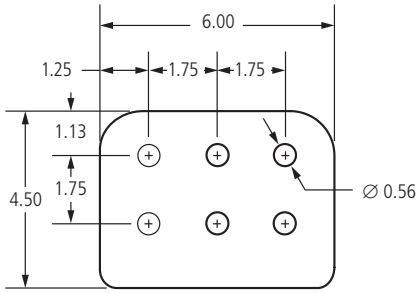

PAD G

Ordering Information

CATALOG NUMBER		CONDUCTOR RANGE			PAD SIZE	DIE SIZE	DIMENSIONS IN INCHES		NOMINAL WEIGHT LBS
OFFSET PAD	CENTER FORMED PAD	DIAMETER	AAC	ACSR			A	AC	
2730.1EHV	2630.1EHV	1.026 - 1.196	795 - 1033.5	715.5(24/7) - 954(54/7)	D	30AH	8.92	0.62	1.6
2734.1EHV	2634.1EHV	1.186 - 1.313	1113 - 1272	954(54/7) -1192.5(45/7)	D	34AH	9.28	0.62	1.9
2734.1EEHV	2634.1EEHV	1.186 - 1.313	1113 - 1272	954(54/7) -1192.5(45/7)	E	34AH	10.28	0.75	2.1
2736.1EHV	2636.1EHV	1.314 - 1.399	1300 - 1431	1192.5(54/19) - 1351.5(45/7)	D	36AH	9.54	0.62	2.1
2736.1EEHV	2636.1EEHV	1.314 - 1.399	1300 - 1431	1192.5(54/19) - 1351.5(45/7)	E	36AH	10.54	0.63	2.5
2738.1EHV	2638.1EHV	1.399 - 1.500	1500 - 1590	1351.5(54/19) - 1510.5(45/7)	D	38AH	9.69	0.62	2.3
2738.1GEHV	2638.1GEHV	1.399 - 1.500	1500 -1590	1351.5(54/19) - 1510.5(45/7)	G	38AH	10.38	0.63	3.1
2740.1EHV	2640.1EHV	1.501 - 1.630	1750 - 2000	1510.5(54/19) - 1780(84/19)	D	40AH	10.27	0.62	2.6
2744.1EHV	2644.1EHV	1.630 - 1.681	2000	2034(72/7)	E	44AH	11.61	0.75	4.0
2744.2EHV	2644.2EHV	1.669 - 1.823	2250 - 2500	2034(72/7) - 2312(76/19)	E	44AH	12.00	0.88	4.0
2748.1EHV	2648.1EHV	1.823 - 1.996	2500 - 2750	2515(76/19)	E	48AH	12.64	0.75	4.6
2748.2EHV	2648.2EHV	1.996 - 2.158	3000-3500	—	E	48AH	12.64	0.75	4.0

© 2011, AFL, all rights reserved. PP-3-00167, Revision 5, 8.14.19
Specifications are subject to change without notice.

DOSSERT®
Type 3400-EHV



Substation 90° terminals are designed for limited space applications as found in substations. Designed for 500 kV service. Terminals are shorter that conventional terminals which saves space and allows for faster installation. Terminals are installed with standard AFL hex dies. Terminals can be supplied pre filled if required.

Material

Aluminum Alloy

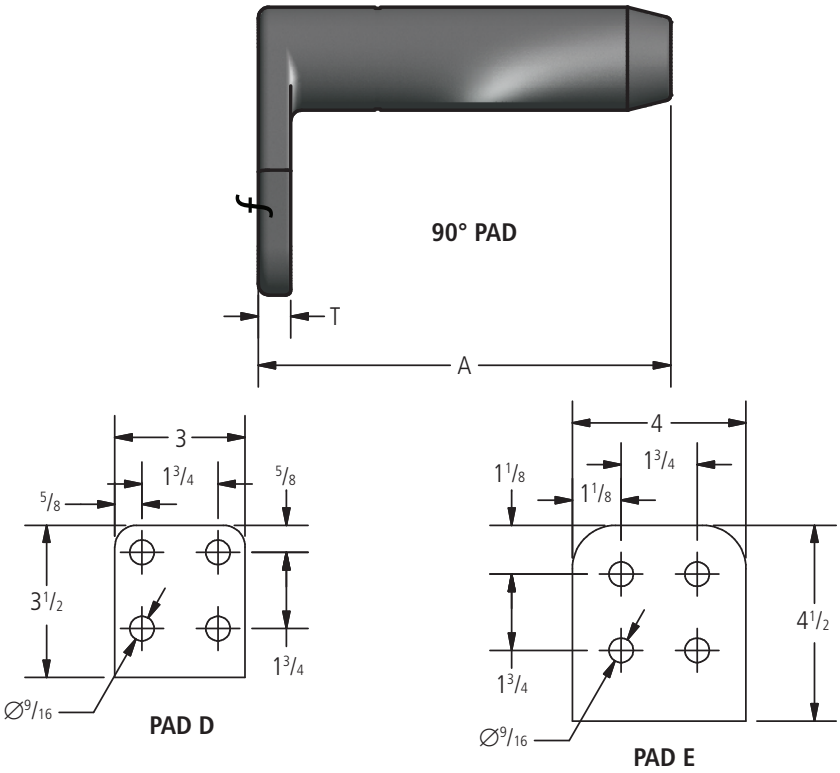

Ordering Information

CATALOG NUMBER	CONDUCTOR RANGE			PAD SIZE	DIE SIZE	DIMENSIONS IN INCHES		NOMINAL WEIGHT LBS
	DIAMETER	AAC	ACSR			A	T	
3430.1-EHV	1.026 - 1.196	795 - 900	715.5(26/7) - 954(54/7)	D	30AH	6.03	0.62	1.3
3434.1-EHV	1.186 - 1.313	954 - 1272	954(54/7) - 1192.5(45/7)	D	34AH	6.44	0.62	1.6
3436.1-EHV	1.314 - 1.399	1351 - 1431	1192.5(54/19) - 1351.5(45/7)	D	36AH	6.72	0.62	1.7
3438.1-EHV	1.399 - 1.500	1500 - 1590	1351.5(45/7) - 1510.5(45/7)	D	38AH	6.94	0.62	2.0
3440.1-EHV	1.501 - 1.630	1750 - 2000	1510.5(54/19) - 1780(84/19)	D	40AH	7.38	0.62	2.2
3444.1-EHV	1.630 - 1.681	2000	2034(72/7)	E	44AH	8.22	0.75	3.4
3444.2-EHV	1.669 - 1.823	2250 - 2500	2034(72/7) - 2312(76/19)	E	44AH	8.22	0.75	3.3
3448.1-EHV	1.823 - 1.996	2500 - 2750	2515(76/19)	E	48AH	9.22	0.75	4.5
3448.2-EHV	1.996 - 2.158	2500 - 2750	2515(76/19)	E	48AH	9.22	0.75	4.0

© 2011, AFL, all rights reserved. PP-3-00177, Revision 1, 9.12.14
Specifications are subject to change without notice.

DOSSERT®

TYPE S5600-EHV, S5100-EHV

Terminal Connectors

The S5600-EHV, S5100-EHV Series Terminal Connector is designed for ACSR and AAC conductors. Designed for 500 kV service. The terminal is fabricated from AFL seamless drawn aluminum.



S5600-EHV

Material

Aluminum Alloy

Notes

Other pad sizes can be custom ordered.

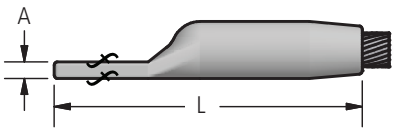

S5600-EHV

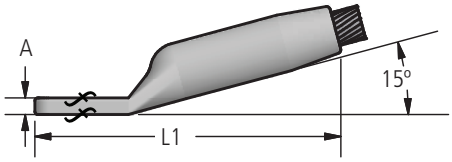

S5100-EHV



S5100-EHV

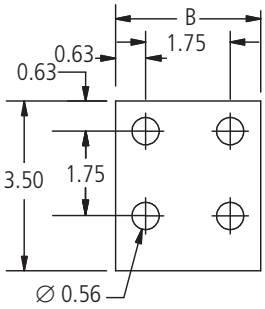

PAD D

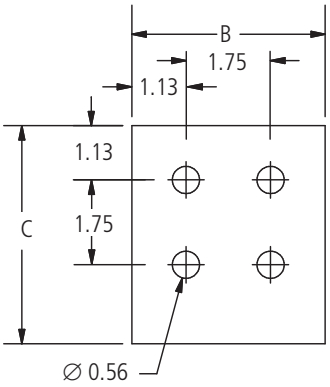

PAD E

Ordering Information

CATALOG NUMBER		CONDUCTOR					DIE SIZE ALUMINUM HEX DIE	DIMENSIONS IN INCHES					PAD SIZE
STRAIGHT	15 DEGREE	ACSR OR AAC	CODE WORD	SIZE KCMIL	STRANDING AL/ST	DIAMETER IN INCHES		A	B	C	L	L1	
S5624.938DEHV	S5124.938DEHV	ACSR	Flicker	477	24/7	0.846	24AH	0.50	3.00	—	9.25	10.25	D
		ACSR	Hawk	477	26/7	0.858							
		ACSR	Hen	477	30/7	0.883							
		ACSR	Osprey	556.5	18/1	0.879							
		AAC	Dahlia	556.5	19	0.856							
		AAC	Mistletoe	556.5	37	0.858							
		AAC	Meadowsweet	600	37	0.891							
S5630.109EHV	S5130.109EHV	ACSR	Stilt	715.5	24/7	1.036	30AH	0.50	3.00	—	9.67	11.27	D
		ACSR	Starling	715.5	26/7	1.051							
		ACSR	Coot	795	36/1	1.040							
		AAC	Arbutus	795	37	1.026							
		AAC	Lilac	795	61	1.028							
		AAC		800	37	1.031							
		AAC	Heliotrope	800	61	1.031							
S5630.116EHV	S5130.116EHV	ACSR	Redwing	715.5	30/19	1.081	30AH	0.50	3.00	—	12.50	11.27	D
		ACSR	Tern	795	45/7	1.063							
		ACSR	Condor	795	54/7	1.093							
		ACSR	Drake	795	26/7	1.108							
		ACSR	Cuckoo	795	24/7	1.092							
		AAC	Snapdragon	900	61	1.094							

© 2011, AFL, all rights reserved. PP-3-00436, Revision 8, 12.2.19
Specifications are subject to change without notice.

DOSSERT®

TYPE S5600-EHV, S5100-EHV (cont.)

Terminal Connectors

Ordering Information

CATALOG NUMBER		CONDUCTOR					DIE SIZE ALUMINUM HEX DIE	DIMENSIONS IN INCHES					PAD SIZE
STRAIGHT	15 DEGREE	ACSR OR AAC	CODE WORD	SIZE KCMIL	STRANDING AL/ST	DIAMETER IN INCHES		A	B	C	L	L1	
S5630.116EEHV	S5130.116EEHV	ACSR	Redwing	715.5	30/19	1.081	30AH	1.00	4.00	4.50	12.50	11.29	E
		ACSR	Tern	795	45/7	1.063							
		ACSR	Condor	795	54/7	1.093							
		ACSR	Drake	795	26/7	1.108							
		ACSR	Cuckoo	795	24/7	1.092							
		AAC	Snapdragon	900	61	1.094							
S5630.122EHV	S5130.122EHV	ACSR	Mallard	795	30/19	1.140	30AH	0.40	3.00	—	12.50	11.27	D
		ACSR	Ruddy	900	45/7	1.131							
		ACSR	Canary	900	54/7	1.162							
		ACSR	Catbird	954	36/1	1.140							
		ACSR	Rail	954	45/7	1.165							
		AAC	Magnolia	954	37	1.124							
		AAC	Goldenrod	954	61	1.126							
		AAC	Camellia	1000	61	1.152							
		AAC	Bluebell	1033.5	37	1.170							
		AAC	Larkspur	1033.5	61	1.172							
S5630.122EEHV	—	ACSR	Mallard	795	30/19	1.140	30AH	0.50	4.00	4.50	10.05	—	E
		ACSR	Ruddy	900	45/7	1.131							
		ACSR	Canary	900	54/7	1.162							
		ACSR	Catbird	954	36/1	1.140							
		ACSR	Rail	954	45/7	1.165							
		AAC	Magnolia	954	37	1.124							
		AAC	Goldenrod	954	61	1.126							
		AAC	Camellia	1000	61	1.152							
		AAC	Bluebell	1033.5	37	1.170							
		AAC	Larkspur	1033.5	61	1.172							
—	S5130.122EEHV	ACSR	Mallard	795	30/19	1.140	30AH	1.00	4.00	4.50	—	11.27	E
		ACSR	Ruddy	900	45/7	1.131							
		ACSR	Canary	900	54/7	1.162							
		ACSR	Catbird	954	36/1	1.140							
		ACSR	Rail	954	45/7	1.165							
		AAC	Magnolia	954	37	1.124							
		AAC	Goldenrod	954	61	1.126							
		AAC	Camellia	1000	61	1.152							
		AAC	Bluebell	1033.5	37	1.170							
		AAC	Larkspur	1033.5	61	1.172							
S5630.125EHV	S5130.125EHV	ACSR	Cardinal	954	54/7	1.196	30AH	0.40	3.00	—	12.50	11.27	D
		ACSR	Tanager	1033.5	36/1	1.186							
S5630.125EEHV	—	ACSR	Cardinal	954	54/7	1.196	30AH	0.50	4.00	4.00	10.03	—	E
		ACSR	Tanager	1033.5	36/1	1.186							
—	S5130.125EEHV	ACSR	Cardinal	954	54/7	1.196	30AH	1.00	4.00	4.50	—	11.25	E
		ACSR	Tanager	1033.5	36/1	1.186							
S5634.128EHV	S5134.128EHV	ACSR	Ortolan	1033.5	45/7	1.212	34AH	0.60	3.00	—	12.20	12.44	D
		AAC	Marigold	1113	61	1.216							
S5634.134EHV	S5134.134EHV	ACSR	Curlew	1033.5	54/7	1.244	34AH	0.60	3.00	—	12.20	12.44	D
		ACSR	Bluejay	1113	45/7	1.259							
		AAC	Hawthorn	1192.5	61	1.258							
		AAC	Narcissus	1272	61	1.300							
S5634.138EHV	S5134.138EHV	ACSR	Bunting	1192.5	45/7	1.302	34AH	0.60	3.00	—	12.20	12.44	D
		ACSR	Finch	1113	54/19	1.293							
S5636.144EHV	S5136.144EHV	ACSR	Bittern	1272	45/7	1.345	36AH	0.60	3.00	—	13.76	12.50	D
		ACSR	Grackle	1192.5	54/19	1.333							
		AAC	Columbine	1351	61	1.340							
		AAC	Carnation	1431	61	1.379							
S5636.144EEHV	S5136.144EEHV	ACSR	Bittern	1272	45/7	1.345	36AH	1.00	4.00	4.50	10.85	10.73	E
		ACSR	Grackle	1192.5	54/19	1.333							
		AAC	Columbine	1351	61	1.340							
		AAC	Carnation	1431	61	1.379							
S5636.147EHV	S5136.147EHV	ACSR	Pheasant	1272	54/19	1.382	36AH	0.60	3.00	—	13.76	12.50	D
		ACSR	Dipper	1351.5	45/7	1.386							
		ACSR		1500	91	1.412							
		AAC	Gladiolus	1510.5	61	1.187							

© 2011, AFL, all rights reserved. PP-3-00436, Revision 8, 12.2.19
Specifications are subject to change without notice.

DOSSERT®

TYPE S5600-EHV, S5100-EHV (cont.)

Terminal Connectors

Ordering Information

CATALOG NUMBER		CONDUCTOR					DIE SIZE ALUMINUM HEX DIE	DIMENSIONS IN INCHES					PAD SIZE
STRAIGHT	15 DEGREE	ACSR OR AAC	CODE WORD	SIZE KCMIL	STRANDING AL/ST	DIAMETER IN INCHES		A	B	C	L	L1	
S5638.150EHV	S5138.150EHV	ACSR	Martin	1351.5	54/19	1.424	38AH	0.80	3.00	—	13.94	13.69	D
		ACSR	Bobolink	1431	45/7	1.427							
S5638.150EEHV	S5138.150EEHV	ACSR	Martin	1351.5	54/19	1.424	38AH	1.00	4.00	4.50	11.44	13.69	E
		ACSR	Bobolink	1431	45/7	1.427							
S5638.156EHV	S5138.156EHV	ACSR	Plover	1431	54/19	1.465	38AH	0.70	3.00	—	13.69	13.69	D
		ACSR	Nuthatch	1510.5	45/7	1.466							
		AAC	Coreopis	1590	61	1.250							
		AAC	Dogwood	1590	91	1.454							
S5638.156EEHV	S5138.156EEHV	ACSR	Plover	1431	54/19	1.465	38AH	1.00	4.00	4.50	11.41	13.94	E
		ACSR	Nuthatch	1510.5	45/7	1.466							
		AAC	Coreopis	1590	61	1.250							
		AAC	Dogwood	1590	91	1.454							
S5640.162EHV	S5140.162EHV	ACSR	Parrot	1510.5	54/19	1.506	40AH	0.70	4.00	4.50	15.58	14.88	E
		ACSR	Lapwig	1590	45/7	1.504							
		ACSR	Falcon	1590	54/19	1.545							
		AAC	Jessamine	1750	61	1.525							
S5640.162EEHV	S5140.162EEHV	ACSR	Parrot	1510.5	54/19	1.506	40AH	1.00	4.00	4.50	11.83	11.92	E
		ACSR	Lapwig	1590	45/7	1.504							
		ACSR	Falcon	1590	54/19	1.545							
		AAC	Jessamine	1750	61	1.525							
S5642.178EHV	S5142.178EHV	ACSR	Chukar	1780	84/19	1.602	42AH	0.70	4.00	4.50	15.91	15.50	E
		ACSR		2034	72/7	1.681							
		AAC	Cowslip	2000	91	1.630							
S5644.181EHV	S5144.181EHV	ACSR	Kiwi	2167	72/7	1.737	44AH	0.70	4.00	4.50	17.84	16.00	E
		AAC	Sagebrush	2250	91	1.729							
		AAC		2300	61	1.750							
		AAC		2300	91	1.750							
S5644.184EHV	S5144.184EHV	ACSR	Bluebird	2156	84/19	1.762	44AH	0.70	4.00	4.50	17.84	16.00	E
S5644.188EHV	S5144.188EHV	ACSR	Thrasher	2312	76/19	1.802	44AH	0.70	4.00	4.50	17.84	16.00	E
		AAC	Lupine	2500	91	1.823							
S5648.197EHV	S5148.197EHV	ACSR	Joree	2515	76/19	1.880	48AH	0.80	4.00	4.50	17.84	17.06	E
		AAC	Bitterroot	2750	91	1.912							

© 2011, AFL, all rights reserved. PP-3-00436, Revision 8, 12.2.19
Specifications are subject to change without notice.

DOSSERT®

TYPE S5600-45EHV, S5800EHV

Terminal Connectors

The S5600-45EHV, S5800EHV Series Terminal Connector is designed for ACSR and AAC conductors. Designed for 500 kV service. The terminal is fabricated from AFL seamless drawn aluminum.



S5600-45EHV

Material

Aluminum Alloy

Notes

Other pad sizes can be custom ordered.

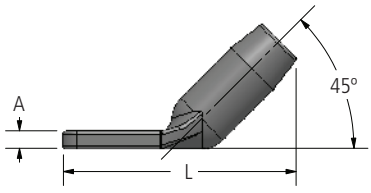

S5600-45EHV

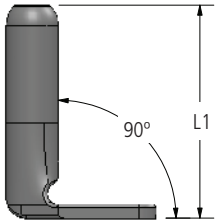

S5800EHV



S5800EHV

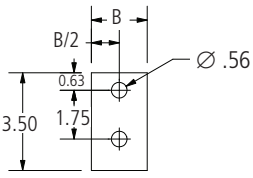

PAD B

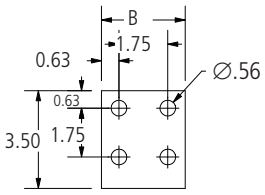

PAD D

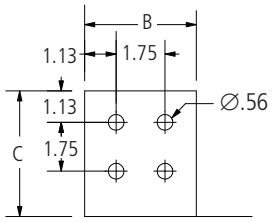

PAD E

Ordering Information

CATALOG NUMBER		CONDUCTOR					DIE SIZE ALUMINUM HEX DIE	DIMENSIONS IN INCHES					PAD SIZE
45 DEGREE	90 DEGREE	AAC OR ACSR	CODE WORD	SIZE KCMIL	STRANDING AL/ST	DIAMETER IN INCHES		A	B	C	L	L1	
S5673.391-45EHV	S5873.391EHV	AAC	Poppy	1/0	7	0.368	73AH	0.20	1.00	—	5.04	5.04	B
S5674.438-45EHV	S5874.438EHV	ACSR	Raven	1/0	6/1	0.398	74AH	0.30	1.00	—	5.28	5.28	B
		AAC	Aster	2/0	7	0.414							
S5674.484-45EHV	S5874.484EHV	ACSR	Quail	2/0	6/1	0.447	74AH	0.30	1.00	—	5.28	5.28	B
		ACSR	Phlox	3/0	7	0.464							
S5675.547-45EHV	S5875.547EHV	ACSR	Pigeon	3/0	6/1	0.502	75AH	0.50	1.00	—	5.71	5.71	B
		AAC	Oxlip	4/0	7	0.522							
S5675.609-45EHV	S5875.609EHV	ACSR	Penguin	4/0	6/1	0.563	75AH	0.50	1.00	—	5.71	5.71	B
		AAC	Valerian	250	19	0.575							
		AAC	Laurel	266.8	19	0.593							
S5676.656-45EHV	S5876.656EHV	ACSR	Waxwing	266.8	18/1	0.609	76AH	0.60	1.30	—	5.35	5.35	B
		AAC	Peony	300	19	0.629							

© 2011, AFL, all rights reserved. PP-3-00438, Revision 6, 12.2.19
Specifications are subject to change without notice.

DOSSERT®

TYPE S5600-45EHV, S5800EHV (cont.)

Terminal Connectors

Ordering Information (cont.)

CATALOG NUMBER		CONDUCTOR					DIE SIZE ALUMINUM HEX DIE	DIMENSIONS IN INCHES					PAD SIZE
45 DEGREE	90 DEGREE	AAC OR ACSR	CODE WORD	SIZE KCMIL	STRANDING AL/ST	DIAMETER IN INCHES		A	B	C	L	L1	
S5676.688-45EHV	S5876.688EHV	ACSR	Owl	266.8	6/7	0.633	76AH	0.60	1.30	—	5.35	5.35	B
		ACSR	Partridge	266.8	26/7	0.642							
		AAC	Tulip	336.4	19	0.666							
S5620.719-45EHV	S5820.719EHV	AAC	Daffodil	350	19	0.679	20AH	0.50	1.30	—	6.13	6.13	B
S5676.719-45EHV	S5876.719EHV	ACSR	Ostrich	300	26/7	0.680	76AH	0.50	1.30	—	5.35	5.35	B
		ACSR	Merlin	336.4	18/1	0.684							
S5676.750-45EHV	S5876.750EHV	AAC	Canna	397.5	19	0.724	76AH	0.50	1.30	—	5.35	5.35	B
S5620.781-45EHV	S5820.781EHV	ACSR	Linnet	336.4	26/7	0.720	20AH	0.50	1.30	—	6.13	6.13	B
		ACSR	Oriole	336.4	30/7	0.741							
		ACSR	Chickadee	397.5	18/1	0.743							
S5676.781-45EHV	S5876.781EHV	ACSR	Linnet	336.4	26/7	0.720	76AH	0.50	1.30	—	5.35	5.35	B
			Chickdee	397.5	18/7	0.743							
S5620.812-45EHV	S5820.812EHV	ACSR	Brant	397.5	24/7	0.772	20AH	0.50	1.30	—	6.13	6.16	B
		AAC	Goldentuft	450	19	0.770							
		AAC	Yarrow	450	37	0.772							
		AAC	Cosmos	477	19	0.793							
		AAC	Syringa	477	37	0.795							
S5620.844-45EHV	S5820.844EHV	ACSR	Ibis	397.5	26/7	0.783	20AH	0.50	1.30	—	6.13	6.13	B
		ACSR	Lark		30/7	0.806							
S5624.875-45EHV	S5824.875EHV	ACSR	Pelican	477	18/1	0.814	24AH	0.60	1.50	—	7.58	7.58	B
		AAC	Cosmos		19	0.793							
		AAC	Syringa		37	0.795							
		AAC	Zinnia	500	19	0.811							
		AAC	Hyacinth		37	0.813							
S5624.938-45EHV	S5824.938EHV	ACSR	Flicker	477	24/7	0.846	24AH	0.60	1.50	—	7.58	7.58	B
			Hawk		26/7	0.858							
			Hen		30/7	0.883							
			Osprey	556.5	18/1	0.879							
		AAC	Dahlia		19	0.856							
			Mistletoe		37	0.858							
			Meadow-sweet	600	37	0.891							
S5624.969-45EHV	S5824.969EHV	ACSR	Parakeet	556.5	24/7	0.914	24AH	0.60	1.50	—	7.58	7.58	B
			Dove		26/7	0.927							
		AAC	Orchid	636	37	0.918							
			Heuchera	650		0.928							

© 2011, AFL, all rights reserved. PP-3-00438, Revision 6, 12.2.19
Specifications are subject to change without notice.

DOSSERT®

TYPE S5600-45EHV, S5800EHV (cont.)

Terminal Connectors

Ordering Information (cont.)

CATALOG NUMBER		CONDUCTOR					DIE SIZE ALUMINUM HEX DIE	DIMENSIONS IN INCHES					PAD SIZE
45 DEGREE	90 DEGREE	AAC OR ACSR	CODE WORD	SIZE KCMIL	STRANDING AL/ST	DIAMETER IN INCHES		A	B	C	L	L1	
S5630.109-45EHV	S5830.109EHV	ACSR	Stilt	715.5	24/7	1.036	30AH	0.50	3.00	—	7.63	7.63	D
		ACSR	Starling	715.5	26/7	1.051							
		ACSR	Coot	795	36/1	1.040							
		AAC	Arbutus	795	37	1.026							
		AAC	Lilac	795	61	1.028							
		AAC	—	800	37	1.031							
		AAC	Heliotrope	800	61	1.031							
S5630.116-45EHV	S5830.116EHV	ACSR	Redwing	715.5	30/19	1.081	30AH	0.50	3.00	—	7.63	7.63	D
		ACSR	Tern	795	45/7	1.063							
		ACSR	Condor	795	54/7	1.093							
		ACSR	Drake	795	26/7	1.108							
		ACSR	Cuckoo	795	24/7	1.092							
		AAC	Snapdragon	900	61	1.094							
S5630.122-45EHV	S5830.122EHV	ACSR	Mallard	795	30/19	1.140	30AH	0.40	3.00	—	7.63	7.63	D
		ACSR	Ruddy	900	45/7	1.131							
		ACSR	Canary	900	54/7	1.162							
		ACSR	Catbird	954	36/1	1.140							
		ACSR	Rail	954	45/7	1.165							
		AAC	Magnolia	954	37	1.124							
		AAC	Goldenrod	954	61	1.126							
		AAC	Camellia	1000	61	1.152							
		AAC	Bluebell	1033.5	37	1.170							
		AAC	Larkspur	1033.5	61	1.172							
S5630.125-45EHV	S5830.125EHV	ACSR	Cardinal	954	54/7	1.196	30AH	0.40	3.00	—	7.63	7.63	D
		ACSR	Tanager	1033.5	36/1	1.186							
S5634.128-45EHV	S5834.128EHV	ACSR	Ortolan	1033.5	45/7	1.212	34AH	0.60	3.00	—	8.20	8.20	D
		AAC	Marigold	1113	61	1.216							
S5634.134-45EHV	S5834.134EHV	ACSR	Curlew	1033.5	54/7	1.244	34AH	0.60	3.00	—	8.20	8.20	D
		ACSR	Bluejay	1113	45/7	1.259							
		AAC	Hawthorn	1192.5	61	1.258							
		AAC	Narcissus	1272	61	1.300							
S5634.138-45EHV	S5834.1238EHV	ACSR	Bunting	1192.5	45/7	1.302	34AH	0.60	3.00	—	8.20	8.20	D
		ACSR	Finch	1113	54/19	1.293							

© 2011, AFL, all rights reserved. PP-3-00438, Revision 6, 12.2.19
Specifications are subject to change without notice.

DOSSERT®

TYPE S5600-45EHV, S5800EHV (cont.)

Terminal Connectors

Ordering Information (cont.)

CATALOG NUMBER		CONDUCTOR					DIE SIZE ALUMINUM HEX DIE	DIMENSIONS IN INCHES					PAD SIZE
45 DEGREE	90 DEGREE	AAC OR ACSR	CODE WORD	SIZE KCMIL	STRANDING AL/ST	DIAMETER IN INCHES		A	B	C	L	L1	
S5636.144-45EHV	S5836.144EHV	ACSR	Bittern	1272	45/7	1.345	36AH	0.60	3.00	—	8.23	8.23	D
		ACSR	Grackle	1192.5	54/19	1.333							
		AAC	Columbine	1351	61	1.340							
		AAC	Carnation	1431	61	1.379							
S5636.147-45EHV	S5836.147EHV	ACSR	Pheasant	1272	54/19	1.382	36AH	0.60	3.00	—	8.23	8.23	D
		ACSR	Dipper	1351.5	45/7	1.386							
		ACSR	—	1500	91	1.412							
		AAC	Gladiolus	1510.5	61	1.187							
S5638.150-45EHV	S5838.150EHV	ACSR	Martin	1351.5	54/19	1.424	38AH	0.80	3.00	—	8.85	8.85	D
		ACSR	Bobolink	1431	45/7	1.427							
S5638.156-45EHV	S5838.156EHV	ACSR	Plover	1431	54/19	1.465	38AH	0.70	3.00	—	8.85	8.85	D
		ACSR	Nuthatch	1510.5	45/7	1.466							
		AAC	Coreopsis	1590	61	1.250							
		AAC	Dogwood	1590	91	1.454							
S5638.156-45EEHV	—	ACSR	Plover	1431	54/19	1.465	38AH	1.00	4.00	4.50	7.31	7.31	E
		ACSR	Nuthatch	1510.5	45/7	1.466							
		AAC	Coreopsis	1590	61	1.250							
		AAC	Dogwood	1590	91	1.454							
—	S5838.156EEHV	ACSR	Plover	1431	54/19	1.465	38AH	0.50	4.00	4.00	7.31	7.31	E
		ACSR	Nuthatch	1510.5	45/7	1.466							
		AAC	Coreopsis	1590	61	1.250							
		AAC	Dogwood	1590	91	1.454							
S5640.162-45EHV	S5840.162EHV	ACSR	Parrot	1510.5	54/19	1.506	40AH	0.70	3.00	—	9.95	9.95	D
		ACSR	Lapwing	1590	45/7	1.504							
		ACSR	Falcon	1590	54/19	1.545							
		AAC	Jessamine	1750	61	1.525							
S5642.178-45EHV	S5842.178EHV	ACSR	Chukar	1780	84/19	1.602	42AH	0.70	4.00	4.50	10.28	10.28	E
		ACSR	—	2034	72/7	1.681							
		AAC	Cowslip	2000	91	1.630							
S5644.181-45EHV	S5844.181EHV	ACSR	Kiwi	2167	72/7	1.737	44AH	0.70	4.00	4.50	10.72	10.72	E
		AAC	Sagebrush	2250	91	1.729							
		AAC	—	2300	61	1.750							
		AAC	—	2300	91	1.750							

© 2011, AFL, all rights reserved. PP-3-00438, Revision 6, 12.2.19
Specifications are subject to change without notice.

DOSSERT®

TYPE S5600-45EHV, S5800EHV (cont.)

Terminal Connectors

Ordering Information (cont.)

CATALOG NUMBER		CONDUCTOR					DIE SIZE ALUMINUM HEX DIE	DIMENSIONS IN INCHES					PAD SIZE
45 DEGREE	90 DEGREE	AAC OR ACSR	CODE WORD	SIZE KCMIL	STRANDING AL/ST	DIAMETER IN INCHES		A	B	C	L	L1	
S5644.184-45EHV	S5844.184EHV	ACSR	Bluebird	2156	84/19	1.762	44AH	0.70	4.00	4.50	10.72	10.72	E
S5644.188-45EHV	S5844.188EHV	ACSR	Thrasher	2312	76/19	1.802	44AH	0.70	4.00	4.50	10.72	10.72	E
		AAC	Lupine	2500	91	1.823							
S5648.197-45EHV	S5848.197EHV	ACSR	Joree	2515	76/19	1.880	48AH	0.80	4.00	4.50	11.35	11.35	E
		AAC	Bitterroot	2750	91	1.912							

© 2011, AFL, all rights reserved. PP-3-00438, Revision 6, 12.2.19
Specifications are subject to change without notice.

DOSSERT®

TYPE DP2L-V-EC

Substation Compression Terminal

Use for cable to terminal application. Designed for 500 kV service.

Material

Aluminum Alloy



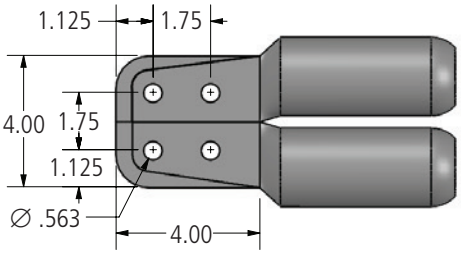

DP2L-4N4-V-EC SERIES

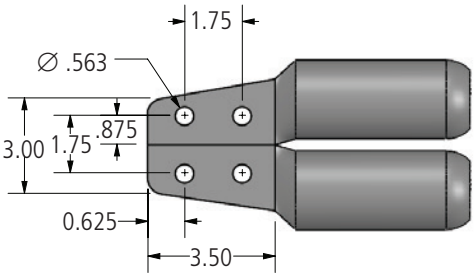

DP2L-4N-V-EC SERIES

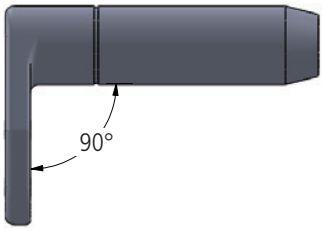

DP2LA-N-90-V-EC SERIES

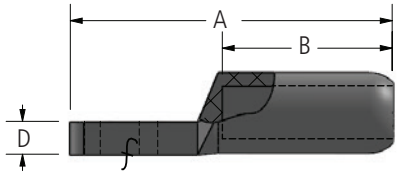

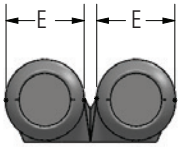

Ordering Information

CATALOG NUMBER	CONDUCTOR RANGE			DIMENSIONS IN INCHES				DIE SIZE
	IN	AAC	ACSR	A	B	D	E	
DP2L100-4N-V-EC	1.026 - 1.196	795 - 1033.5	715.5(24/7) - 954(54/7)	8.84	4.09	1.00	1.88	30AH
DP2L100-4N4-V-EC				9.46				
DP2L127-4N-V-EC	1.186 - 1.313	1113 - 1272	954(54/7) - 1192.5(45/7)	9.19	4.44	1.00	2.12	34AH
DP2L127-4N4-V-EC				9.82				
DP2L151-4N4-V-EC	1.314 - 1.399	1300 - 1431	1192.5(54/19) - 1351.5(45/7)	10.53	4.95	1.00	2.25	36AH
DP2LA151-4N4-90-V-EC				—	4.70			
DP2L160-4N-V-EC	1.399 - 1.500	1500 - 1590	1351.5(54/19) - 1510.5(45/7)	9.69	4.94	1.00	2.38	38AH
DP2L160-4N4-V-EC				10.32				
DP2L180-4N-V-EC	1.501 - 1.630	1750 - 2000	1510.5(54/19) - 1780(84/19)	10.14	—	1.00	2.50	40AH
DP2L180-4N4-V-EC				11.14				
DP2L250-4N4-V-EC	1.802 - 1.857	2500	2300(96/19) - 2312(76/19)	11.77	6.34	1.00	2.75	44AH
DP2LA250-4N4-90-V-EC				—				

© 2011, AFL, all rights reserved. PP-3-00312, Revision 7, 8.14.19
Specifications are subject to change without notice.

Table of Contents

765 kV

765 kV Table of Contents 605
Pictorial Index 607

Bus Supports
Type B6998 Series 609
Type B7107 Series 610
Type B7582-A Series 611
Type C7009 Series 612

Couplers
Type B7070 Series 613
Type WWC-AA, WWC-E-AA 614

Corona Bells
Type 34443, CXBV600 Series 615

Tee Connectors
Type BAC-EHV-AA 616
Type BCW-EHV-AA 617
Type B7568-A Series 618
Type B7071 Series 619
Type B7072 Series 620
Type B7095 Series 621
Type B7006 Series 622
Type B7875 Series 623
Type B7096-A Series 624
Type B7566, B7565 Series 625
Type B7876, B7882 Series 626
Type WT-EHV-AA 627
Type WRP2CA-20-EHV-AA, WRP2CA-45-EHV-AA 628

Terminal Connectors
Type WPC-4S4-AA-WH, WPCA-4S4-90-AA-WH 629
Type WPCA-20-AA-WH, WPCA-45-AA-WH, WPCA-75-AA-WH 630
Type WPCA-15L-AA-WH, WPCA-15R-AA-WH, WPCA-15L-20-AA-WH, WPCA-15R-20-AA-WH 631
Type B7094, B7567 Series 632
Type B7001 Series 633
Type WP2CA-45-EHV-AA 634
Type B7583-A Series 635
Type B7878-A Series 636

Ground Stud
Type 34640-EHV Series 637

Spacer Clamps
Type C6999-A, B7073 Series 638

Vibration Damper
Type 1705, B7384 Series 639

Stud Connector
Type B7004-A Series 640
Type B7074-A Series 641
Type B7108-A Series 642
Type B7879-A, B7880 Series 643

© 2011, AFL, all rights reserved. PP-3-00624, Revision 12, 11.19.2024
Specifications are subject to change without notice.

765 kV Aluminum Accessories

© 2011, AFL, all rights reserved. PP-3-00624, Revision 12, 11.19.2024
Specifications are subject to change without notice.

765 kV Aluminum Accessories

765 kV Bus Supports



B6998 SERIES

PG. 609

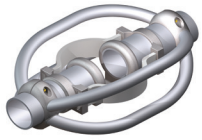

B7101 SERIES

PG. 610

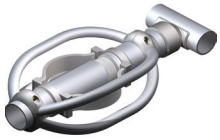

B7582 SERIES

PG. 611



C7009 SERIES

PG. 612

765 kV Couplers



B7070 SERIES

PG. 613



WWC-AA,
WWC-E-AA

PG. 614

765 kV Corona Bells



34433 SERIES

PG. 615



CXBV600 SERIES

PG. 615

765 kV Tee Connectors



BAC-EHV-AA

PG. 616



BCW-EHV-AA

PG. 617



B7568-A SERIES

PG. 618



B7071 SERIES

PG. 619



B7072 SERIES

PG. 620



B7095 SERIES

PG. 621



B7006 SERIES

PG. 622



B7875 SERIES

PG. 623

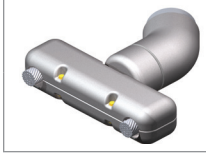

B7096-A SERIES

PG. 624



B7566 SERIES

PG. 625



B7565 SERIES

PG. 625



B7876 SERIES

PG. 626



B7882 SERIES

PG. 626

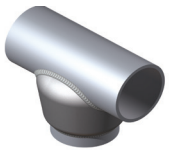

WT-EHV-AA

PG. 627

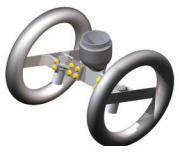

WRP2CA-20-EHV-AA

PG. 628



WRP2CA-45-EHV-AA

PG. 628

765 kV Terminal Connectors



WPC-4S4-AA-WH

PG. 629



WPCA-4S4-90-AA-WH

PG. 629

© 2011, AFL, all rights reserved. PP-3-00625, Revision 10, 11.19.2024
Specifications are subject to change without notice.

765 kV Aluminum Accessories

	WPCA-20-AA-WH
	PG. 630
	WPCA-45-AA-WH
	PG. 630
	WPCA-75-AA-WH
	PG. 631
	WPCA-15L-AA-WH
	PG. 631
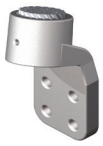	WPCA-15R-AA-WH
	PG. 631
	WPCA-15R-20-AA-WH
	PG. 631
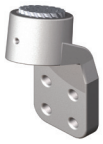	WPCA-15L-20-AA-WH
	PG. 631
	B7094 SERIES
	PG. 632
	B7567 SERIES
	PG. 632
	B7001 SERIES
	PG. 633

	WP2CA-45-EHV-AA
	PG. 634
	B7583-A SERIES
	PG. 635
	B7878-A SERIES
	PG. 636
765 kV Ground Jumpers	
	34640-EHV SERIES
	PG. 637
765 kV Spacer Clamps	
	B7073 SERIES
	PG. 638
	C6999-A SERIES
	PG. 638
765 kV Vibration Dampers	
	1705 SERIES
	PG. 639
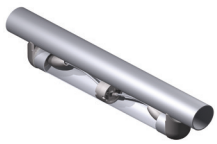	B7384 SERIES
	PG. 639

765 kV Stud Connectors	
	B7004-A SERIES
	PG. 640
	B7074-A SERIES
	PG. 641
	B7108-A SERIES
	PG. 642
	B7879-A SERIES
	PG. 643
	B7880 SERIES
	PG. 643

© 2011, AFL, all rights reserved. PP-3-00625, Revision 10, 11.19.2024
Specifications are subject to change without notice.

DOSSERT®
TYPE B6998 Series

Bolted Support, Slip or Fixed Fit
Recommended for Voltages Up to 765 kV



Support is designed to be corona free for 765 kV operation. Support can be supplied for fixed fit or slip fit applications. For slip fit applicaton, stainless steel chatter springs are supplied. Aluminum mounting hardware is supplied as standard; galvanized steel can be furnished on request.

Material

Aluminum Alloy

Hardware

Yellow anodized aluminum bolts, nuts, and lockwashers. Galvanized steel mounting hardware included.

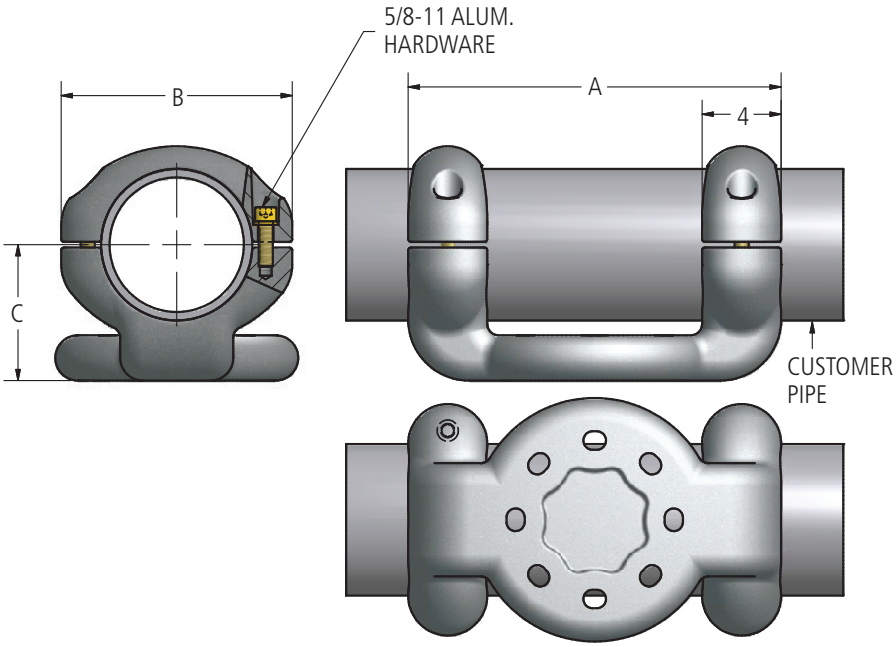

Ordering Information

CATALOG NUMBERS	CONDUCTOR SIZE TUBULAR BUS SPS & EHPS	SLIP OR FIXED	BOLT CIRCLE	DIMENSIONS IN INCHES			NOMINAL WEIGHT LBS
				A	B	C	
B6998-A	6"	Fixed	7"	16.28	10.55	5.50	27.0
B6998-B	6"	Slip	7"	16.28	10.55	5.50	27.6
B6998-C	5"	Fixed	7"	16.50	9.62	5.00	25.0
B6998-D	5"	Slip	7"	16.50	9.62	5.00	25.6
B6998-E	8" O.D.	Fixed	7"	16.50	12.06	5.75	30.0
B6998-F	8" O.D.	Slip	7"	16.50	12.06	5.75	30.6
B6998-G	6"	Fixed	5"	14.50	10.55	5.50	26.5
B6998-H	6"	Slip	5"	14.50	10.55	5.50	27.7
B6998-K	6"	Fixed	3"	12.25	10.55	5.50	24.3

© 2011, AFL, all rights reserved. PP-3-00218, Revision 0, 3.11.11
Specifications are subject to change without notice.

DOSSERT®

TYPE B7107 Series

Welded Support, Expansion Type
Recommended for Voltages Up to 765 kV

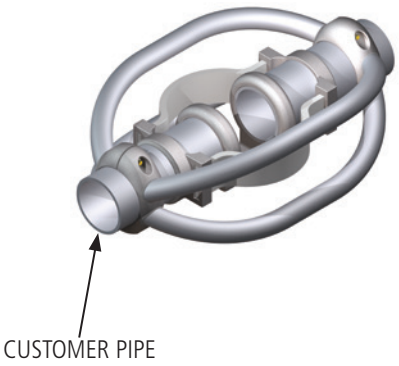

Expansion support is designed to be corona free for 765 KV operation. Expansion support is designed for maximum bus run of 150 feet (46 m) operating between a minimun temperature of -20°F (-28.9°C) and a maximum temperature of 200°F (93.3°C). Assembly consists of support, expansion straps, corona rings and hardware. Stainless steel chatter springs are supplied with corona ring and support assembly. Aluminum mounting hardware is supplied as standard, galvanized steel can be furnished on request. Weldment end plugs can be furnished if required.

Material

Aluminum Alloy

Hardware

Yellow anodized aluminum bolts, nuts, and lockwashers. Galvanized steel mounting hardware included.

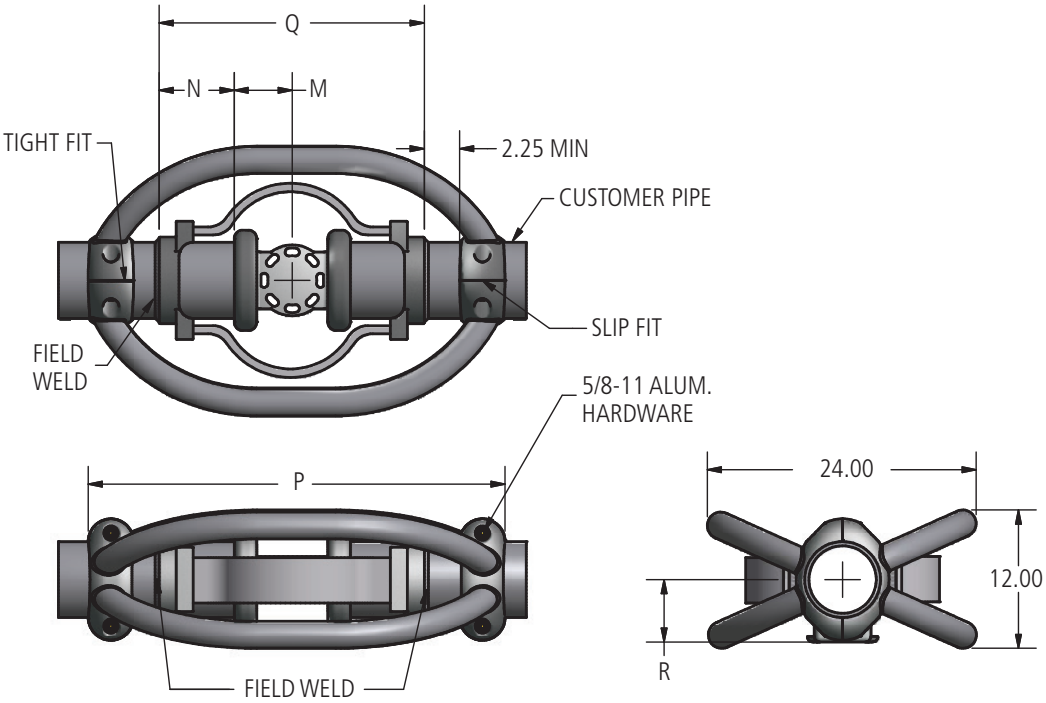

Ordering Information

CATALOG NUMBERS	CONDUCTOR SIZE TUBULAR BUS SPS & EHPS	BOLT CIRCLE	DIMENSIONS IN INCHES					NOMINAL WEIGHT LBS
			M	N	P	Q	R	
B7107-A	6"	7"	5.25	4.81	36.75	23.38	5.50	66.6
B7107-B	6"	5"	4.12	5.94	36.75	23.38	5.50	64.3
B7107-C	5"	7"	6.38	4.00	37.34	20.75	5.00	45.4

© 2011, AFL, all rights reserved. PP-3-00219, Revision 1, 9.4.18
Specifications are subject to change without notice.

DOSSERT®

TYPE B7582-A Series

Tee Connector, Bolted, Welded Expansion Type
Recommended for Voltages Up to 765 kV

Expansion tee is designed to be corona free for 765 KV operation. Expansion tee is designed for maximum bus run of 150 feet (46M) operating between a minimum temperature of -20°F (-28.9°C) and maximum temperature of 200°F (93.3°C). Assembly consists of weld tee, guide insert, expansion straps, corona rings and hardware. Stainless steel chatter springs are supplied with corona ring assembly.

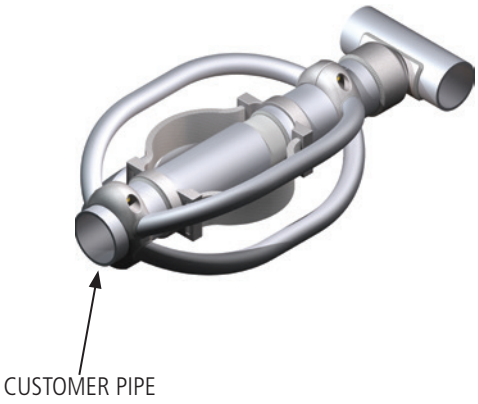

Material

Aluminum Alloy

Hardware

Yellow anodized aluminum bolts, nuts, washers, lockwashers.

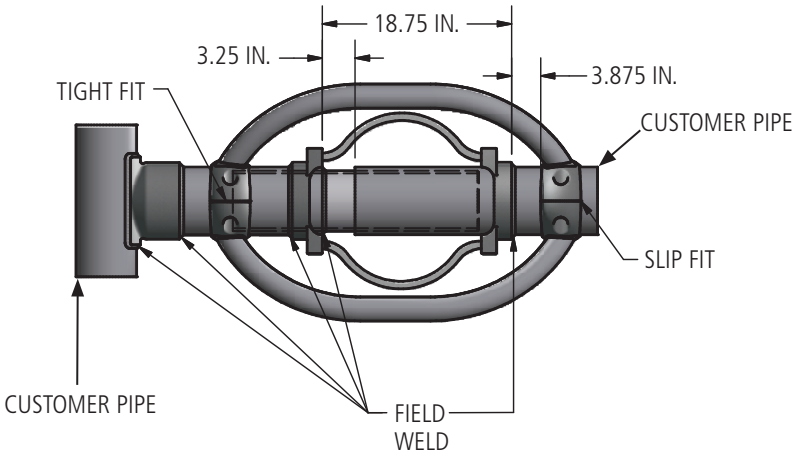

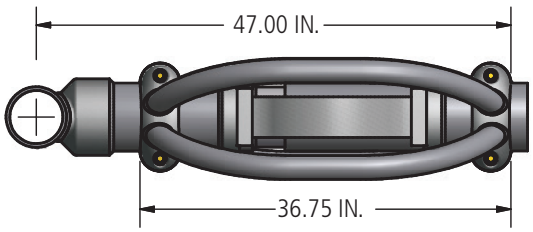

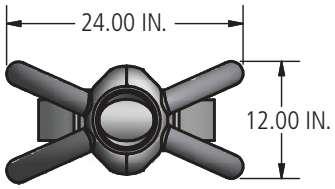

Ordering Information

CATALOG NUMBERS	CONDUCTOR SIZE TUBULAR BUS		NOMINAL WEIGHT LBS
	RUN	TAP	
B7582-A	5"	6"	74.9
	6"	6"	74.9

© 2011, AFL, all rights reserved. PP-3-00232, Revision 0, 3.14.11
Specifications are subject to change without notice.

DOSSERT®

TYPE C7009 Series



Bi-Spacer Support for Strained Conductor
Recommended for Voltages Up to 765 kV

Support is designed to be corona free for 765 KV operation. Aluminum insulator mounting hardware is supplied as standard; galvanized steel hardware can be furnished on request.

Material

Aluminum Alloy

Hardware

Yellow anodized aluminum bolts, nuts, and lockwashers. Galvanized steel mounting hardware included.

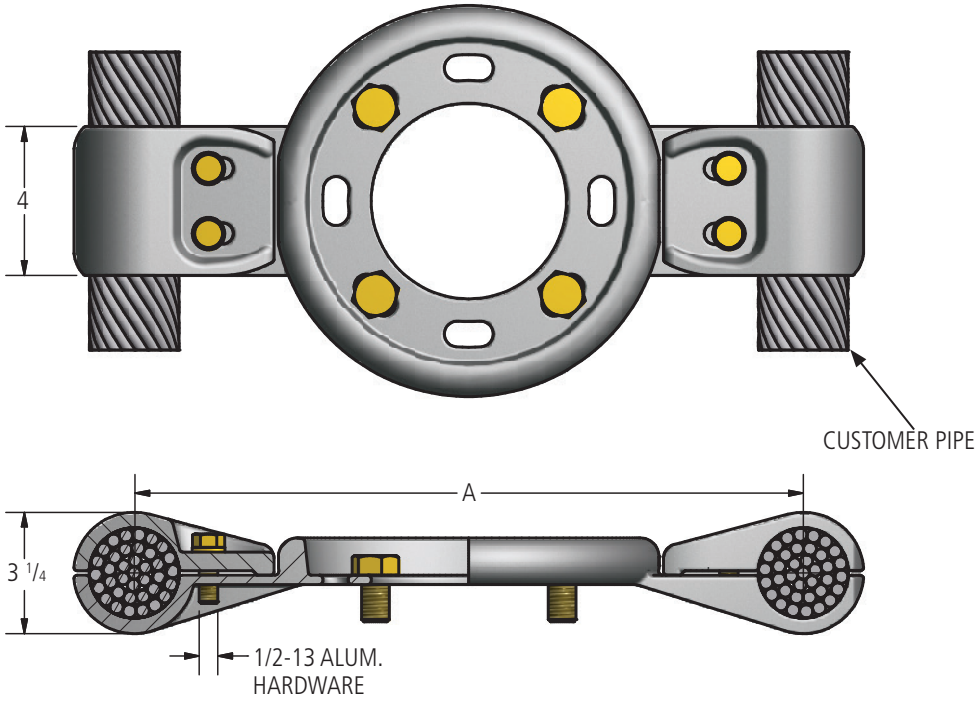

Ordering Information

CATALOG NUMBERS	DIMENSIONS IN INCHES			NOMINAL WEIGHT LBS
	CONDUCTOR SIZE O.D.	BOLT CIRCLE	A	
C7009-A	2.4	7"	18.00	11.4
C7009-B	2.311	7"	17.75	11.4
C7009-C	2.4	5"	18.00	11.4

© 2011, AFL, all rights reserved. PP-3-00266, Revision 0, 3.14.11
Specifications are subject to change without notice.

DOSSERT®

TYPE B7070 Series

Coupler, Bolted, For Tubular Bus Conductor
Recommended for Voltages Up to 765 kV

Bolted coupler is designed to be corona free for 765kV operation. Bolt heads are captive for one wrench installation. Contact surfaces are protected with oxide inhibitor.



Material

Aluminum Alloy

Hardware

Yellow anodized aluminum bolts, nuts, washers, and lockwashers.

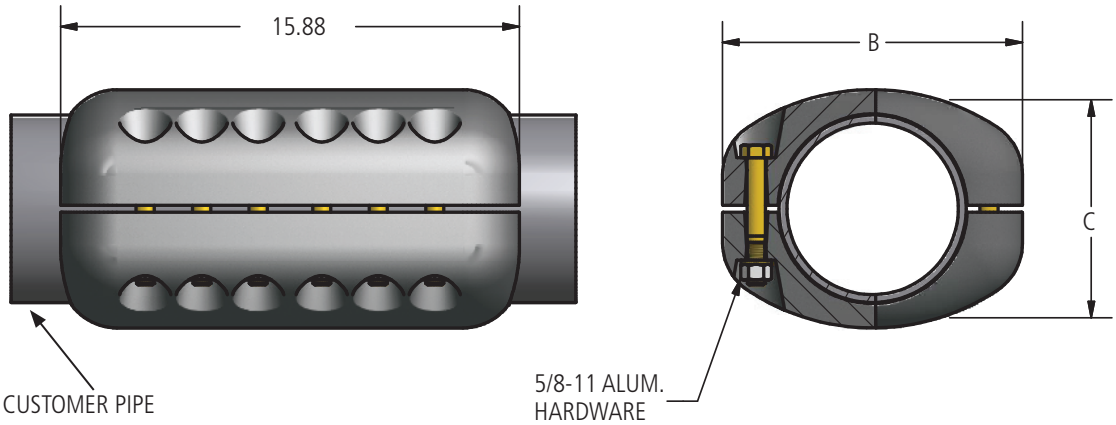

Ordering Information

CATALOG NUMBERS	CONDUCTOR SIZE TUBULAR BUS SPS & EHPS	DIMENSIONS IN INCHES		NOMINAL WEIGHT LBS
		B	C	
B7070-A	6	10.38	8.08	40.6
B7070-B	5	9.56	7.06	36.8

© 2011, AFL, all rights reserved. PP-3-00222, Revision 0, 3.14.11
Specifications are subject to change without notice.

DOSSERT®

TYPE WWC-AA, WWC-E-AA



Aluminum Welded Coupler Rated for 765 kV

Coupler is designed to make connections with high mechanical strength and high electrical conductivity.

Material

Aluminum tubing

Hardware

Aluminum cotter pin

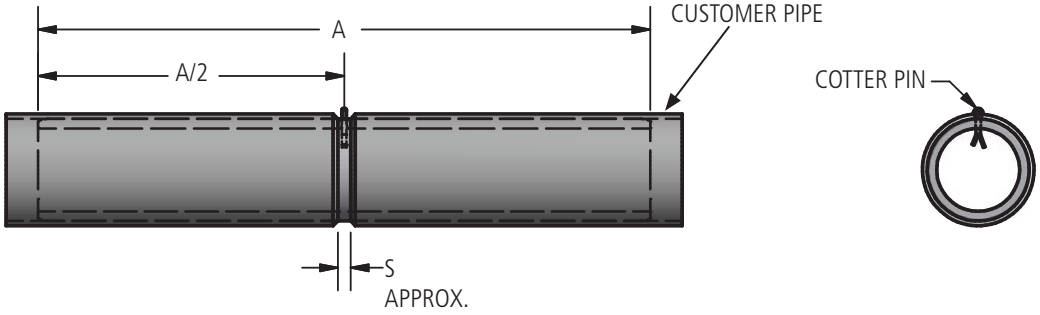

Ordering Information

CATALOG NUMBER		SPS / EPHS	DIMENSIONS (INCHES)	
SCHEDULE 40	SCHEDULE 80		A	S
WWC600-AA	WWC600E-AA	6	24	5/8

© 2011, AFL, all rights reserved. PP-3-00880, Revision 0, 4.21.2021
Specifications are subject to change without notice.

DOSSERT®

TYPE 34433, CXBV600 Series

End Plug For Round Tubular Bus
Recommended for Voltages Up to 765 kV

Corona bell is designed to be corona free for 765 kV service.



34433-EHV

Material

Aluminum Alloy

Hardware

Stainless steel socket set screws (for Bolted style only)

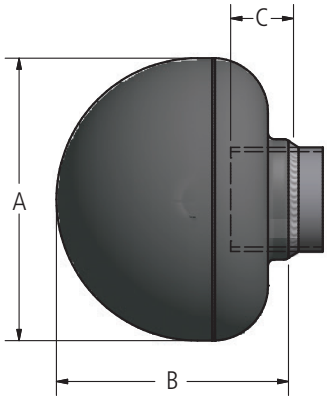

WELDED 34433 EHV

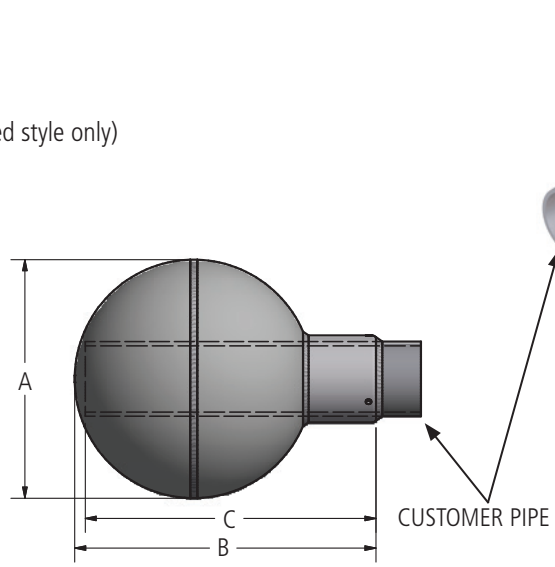

BOLTED CXBV600-21-EHV-AA



CXBV600-21-EHV-AA

Ordering Information

CATALOG NUMBERS	CONDUCTOR SIZE TUBULAR BUS SPS & EHPS	DIMENSIONS IN INCHES			NOMINAL WEIGHT LBS
		A	B	C	
34433EHV	6	17.00	13.25	3.88	18.8
CXBV600-21-EHV-AA	6	21.00	22.12	20.90	30.7

© 2011, AFL, all rights reserved. PP-3-00181, Revision 1, 12.16.13
Specifications are subject to change without notice.

DOSSERT®
TYPE BAC-EHV-AA



Recommended for Voltages Up to 765 kV

Bolted tee connector is designed to be corona free for 765 kV operation.

Material

Aluminum Alloy

Hardware

Yellow anodized aluminum bolts, nuts, and lockwashers.

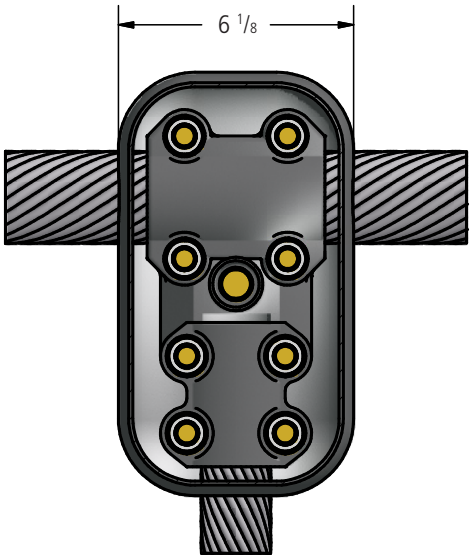

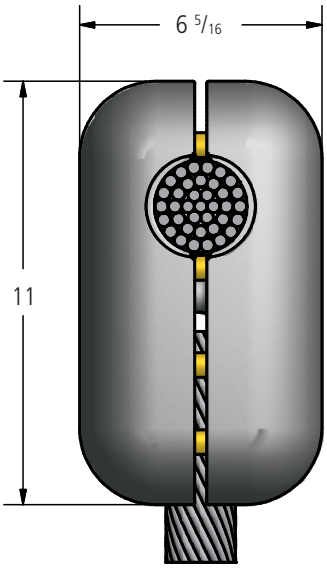

Ordering Information

CATALOG NUMBER	CABLE SIZE	
	RUN	TAP
BAC240R-135A-EHV-AA	2.40 DIA. ALUM.	1351, 5 (45/7) ACSR.
BAC240R-240R-EHV-AA	2.40 DIA. ALUM.	2.40 DIA. ALUM.
BAC240R-250-EHV-AA	2.4 DIA. ALUM.	2500 MCM AL 2156 ACSR
BAC250-250-EHV-AA	2500 MCM AL. 2156 ACSR	2500 MCM AL 2156 ACSR

© 2011, AFL, all rights reserved. PP-3-00238, Revision 0, 3.14.11
Specifications are subject to change without notice.

DOSSERT®
TYPE BCW-EHV-AA



Tee Connector

Bolted tee connector is designed to be corona free for 765 kV operation.

Material

Aluminum alloy

Hardware

Yellow anodized aluminum bolts, nuts, and lockwashers.

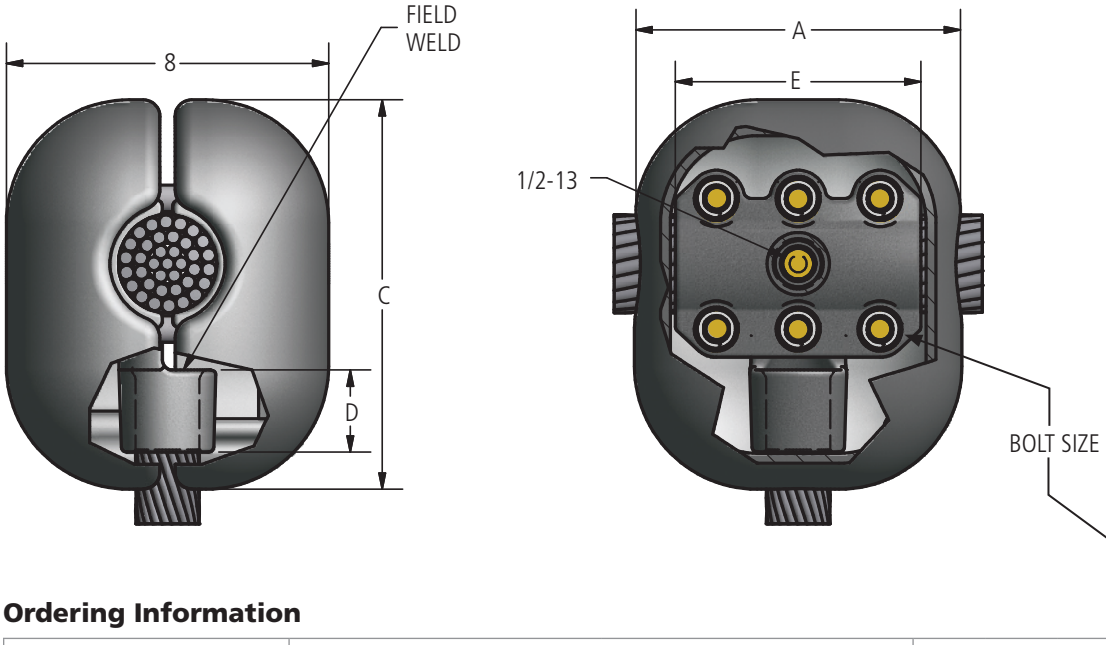

Ordering Information

CATALOG NUMBER	CABLE SIZE		DIMENSIONS IN INCHES				BOLT SIZE
	RUN	TAP	A	C	D	E	
BCW95A-240R-EHV-AA	715.5(26/7) - 954(54/7) MCM	2.4 OD	8	9 1/8	2 3/4	5 1/2	1/2
BCW135A-240R-EHV-AA	1192.5(54/19) - 1351.5(45/7) MCM	2.4 OD	8	9 1/2	2 3/4	5 1/2	1/2
BCW240R-95A-EHV-AA	2.4 OD	715.5(26/7) - 954(54/7) MCM	8	9 1/2	1 3/4	6	5/8
BCW240R-135A-EHV-AA	2.4 OD	1192.5(54/19) - 1351.5(45/7) MCM	8	9 1/2	2	6	5/8
BCW240R-240R-EHV-AA	2.4 OD	2.4 OD	12	10	2 3/4	10	5/8

© 2011, AFL, all rights reserved. PP-3-00246, Revision 0, 3.14.11
Specifications are subject to change without notice.

DOSSERT®

TYPE B7568-A Series

Tee Connector, Bolted, For Tubular Bus Conductor
Recommended for Voltages up to 765 kV

Bolted tee connector is designed to be corona free for 765 kV operation. Bolt heads are captive for one wrench installation. Contact surfaces are protected with oxide inhibitor.

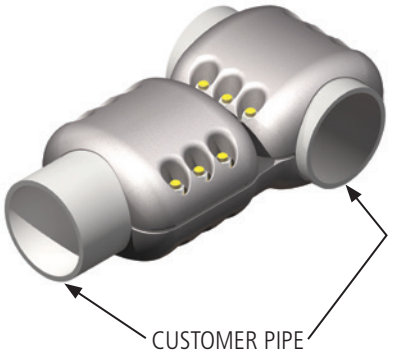

Material

Aluminum Alloy

Hardware

Yellow anodized aluminum bolts, nuts, washers, lockwashers.

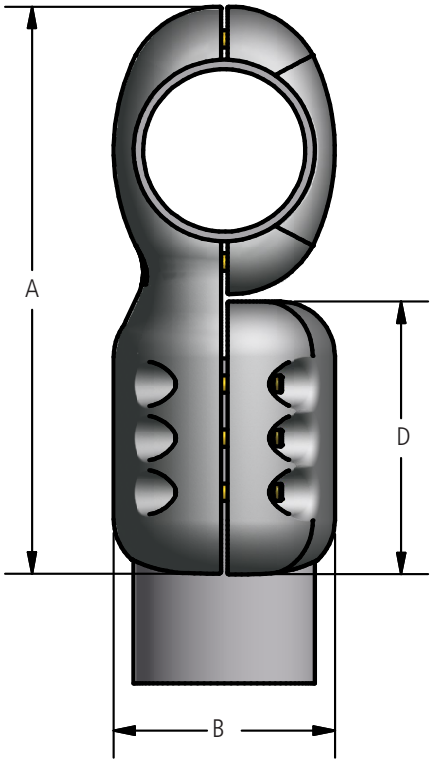

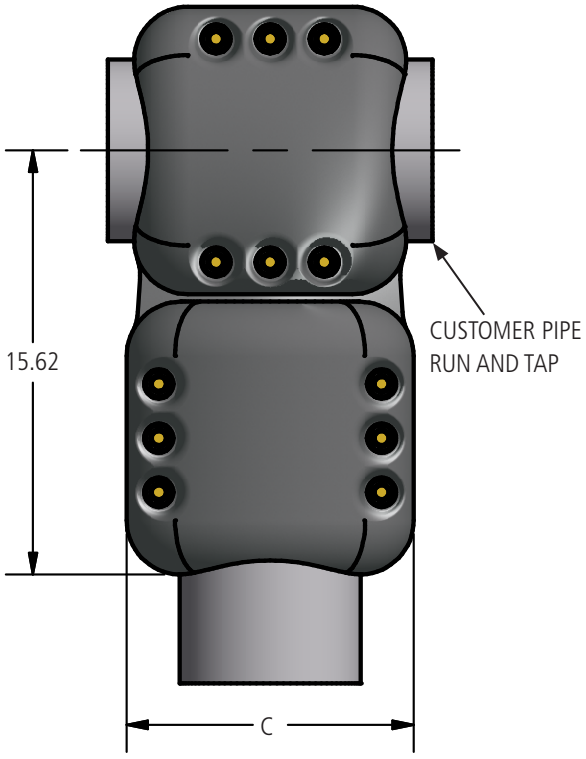

Ordering Information

CATALOG NUMBER	CONDUCTOR SIZE TUBULAR BUS SPS & EHPS		DIMENSIONS IN INCHES				NOMINAL WEIGHT LBS
	RUN	TAP	A	B	C	D	
B7568-A	6"	6"	20.95	8.18	10.66	10.07	44.0

© 2011, AFL, all rights reserved. PP-3-00231, Revision 0, 3.14.11
Specifications are subject to change without notice.

DOSSERT®

TYPE B7071 Series

Welded Tee Adapter, NPS to Two Conductors
Recommended for Voltages up to 765 kV



Bolted adapter is designed to be corona free for 765 KV operation. Assembly consists of bolted end connector, two terminals, corona shields and hardware. Bolt heads are captive for one wrench installation.

Material

Aluminum Alloy

Hardware

Yellow anodized aluminum bolts, nuts, washers, lock washers

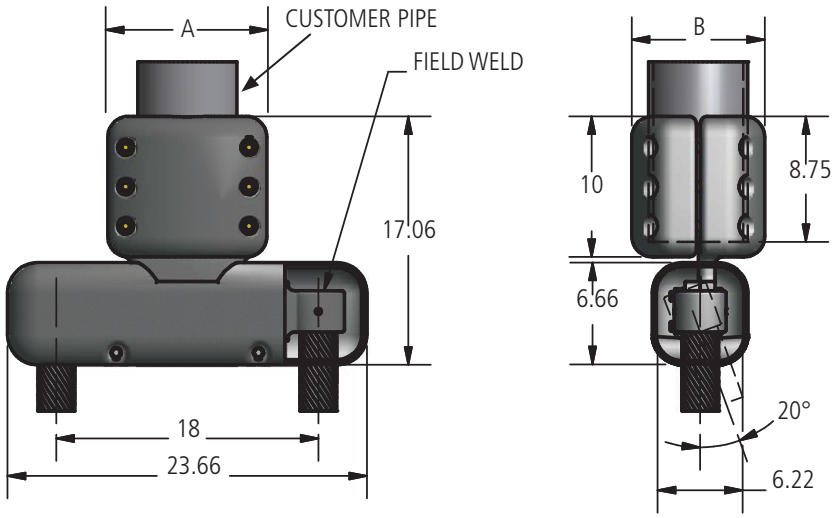

Ordering Information

CATALOG NUMBER	CONDUCTOR SIZE TUBULAR BUS		TERMINAL ANGLE	DIMENSIONS IN INCHES		NOMINAL WEIGHT LBS
	SPS	STRAIN BUS		A	B	
B7071-A	6"	2.4	STR.	10.62	8.12	51.1
B7071-B	6"	2.4	20°	10.62	8.12	50.9
B7071-C	5"	2.4	STR.	9.56	7.06	49.4
B7071-D	5"	2.4	20°	9.56	7.06	49.2

© 2011, AFL, all rights reserved. PP-3-00223, Revision 0, 3.14.11
Specifications are subject to change without notice.

DOSSERT®

TYPE B7072 Series

Welded Tee Adapter, NPS to Two Conductors
Recommended for Voltages up to 765 kV

Bolted adapter is designed to be corona free for 765 KV operation. Assembly consists of bolted end connector, two terminals, corona shields and hardware. Bolt heads are captive for one wrench installation.

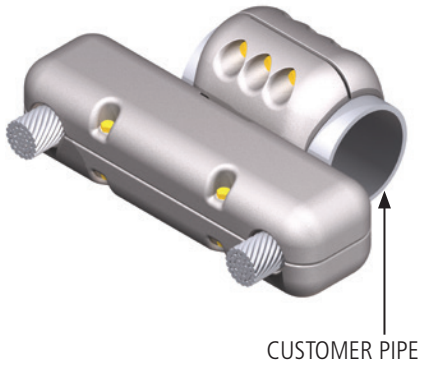

Material

Aluminum Alloy

Hardware

Yellow anodized aluminum bolts, nuts, washers, lockwashers.

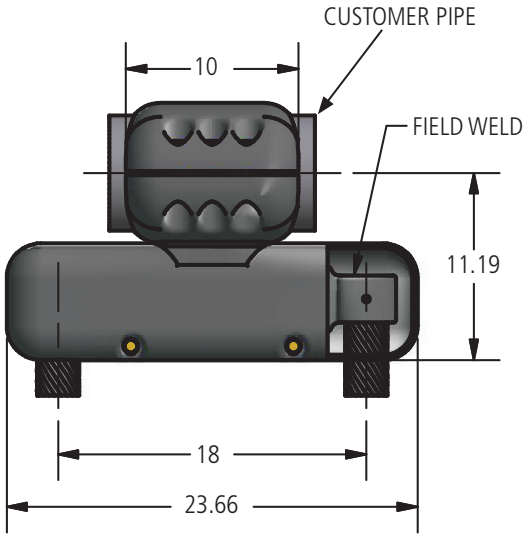

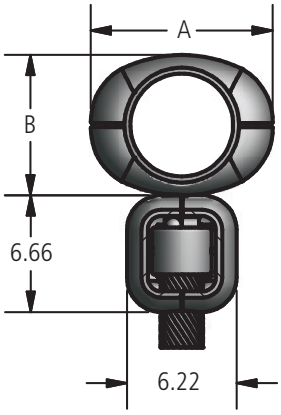

Ordering Information

CATALOG NUMBER	CONDUCTOR SIZE TUBULAR BUS		DIMENSIONS IN INCHES		NOMINAL WEIGHT LBS
	SPS & EHPS	STRAIN BUS	A	B	
B7072-A	6"	2.4	10.66	8.12	47.1
B7072-B	5"	2.4	9.50	7.06	44.4

© 2011, AFL, all rights reserved. PP-3-00224, Revision 0, 3.14.11
Specifications are subject to change without notice.

DOSSERT®

TYPE B7095 Series

Tee Adapter – 45°, Bolted, NPS to Two Conductor Bundle
Recommended for Voltages up to 765 kV

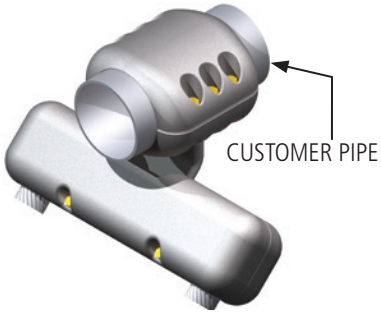

Bolted 45° tee adapter is designed to be corona free for 765 kV operation. Assembly consists of bolted 45° tee connector, two terminals, corona shields and hardware. Bolt heads are captive for one wrench installation. Contact surfaces are protected with oxide inhibitor.

Material

Aluminum Alloy

Hardware

Yellow anodized aluminum bolts, nuts, washers, lockwashers.

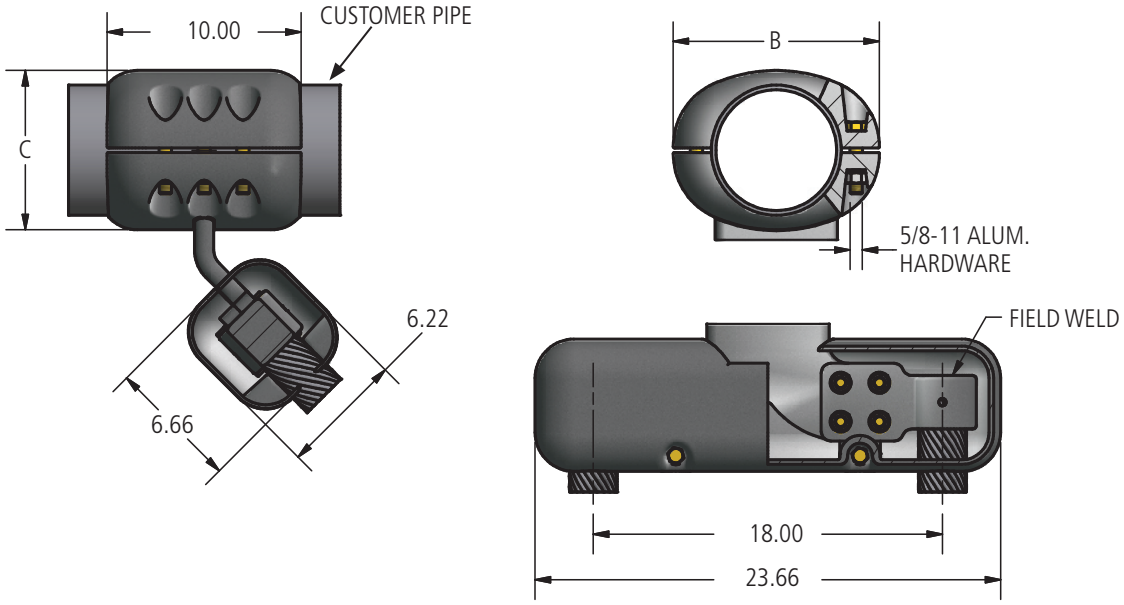

Ordering Information

CATALOG NUMBER	CONDUCTOR SIZE		DIMENSIONS IN INCHES		NOMINAL WEIGHT LBS
	TUBULAR BUS SPS & EHPS	STRAIN BUS	B	C	
B7095-A	6"	2.4	10.66	8.12	46.8
B7095-B	5"	2.4	9.50	7.06	44.1

© 2011, AFL, all rights reserved. PP-3-00226, Revision 0, 3.14.11
Specifications are subject to change without notice.

DOSSERT®

TYPE B7006 Series

Tee Adapter, Welded, NPS to Conductor Bundle
Recommended for Voltages up to 765 kV

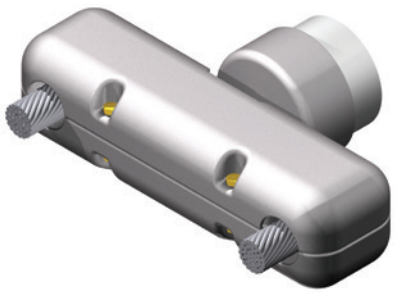

Welded end adapter is designed to be corona free for 765 kV operation. Assembly consists of welded end connector, two or three terminals, corona shields and hardware.

Material

Aluminum Alloy

Hardware

Yellow anodized aluminum bolts, nuts, washers, lockwashers.

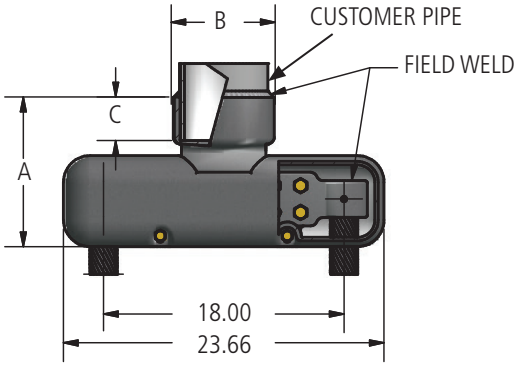

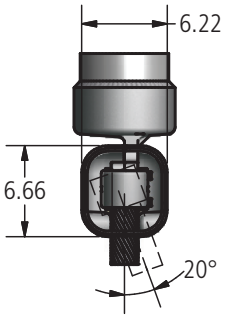

Ordering Information

CATALOG NUMBER	CONDUCTOR SIZE			TERMINAL ANGLE	DIMENSIONS IN INCHES			NOMINAL WEIGHT LBS
	TUBULAR BUS SPS & EHPS	STRAIN			A	B	C	
		MIN	MAX					
B7006-A	6	2.4		STR.	11.19	7.56	3.25	32.8
B7006-B	6	2.4		20°	11.19	7.56	3.25	32.6
B7006-C	5	2.4		STR.	10.69	6.38	2.75	30.6
B7006-D	5	2.4		20	10.69	6.38	2.75	30.4
B7006-E	6	1.361	1.423	STR.	11.19	7.56	3.25	32.8
B7006-F	6	1.361	1.423	20°	11.19	7.56	3.25	32.6

© 2011, AFL, all rights reserved. PP-3-00221, Revision 0, 3.14.11
Specifications are subject to change without notice.

DOSSERT®

TYPE B7875 Series

Tee Adapter, Welded, NPS to Conductor Bundle
Recommended for Voltages up to 765 kV

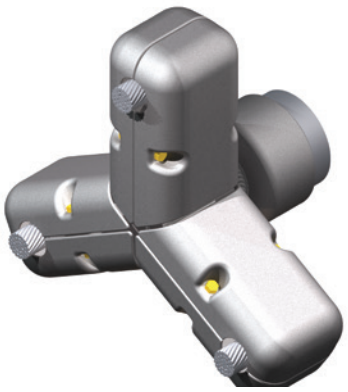

Welded end adapter is designed to be corona free for 765 kV operation. Assembly consists of welded end connector, two or three terminals, corona shields and hardware.

Material

Aluminum Alloy

Hardware

Yellow anodized aluminum bolts, nuts, washers, lockwashers.

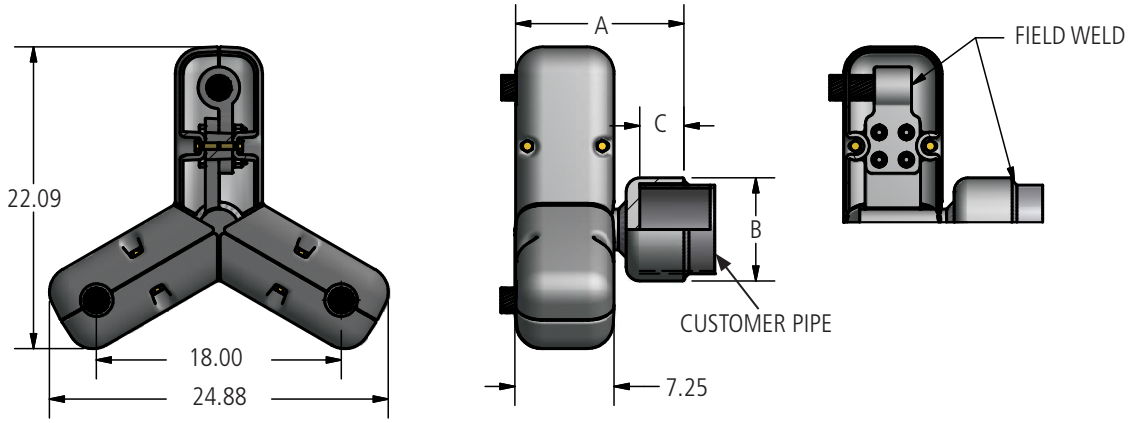

Ordering Information

CATALOG NUMBER	CONDUCTOR SIZE		DIMENSIONS IN INCHES			NOMINAL WEIGHT LBS
	TUBULAR BUS SPS & EHPS	STRAIN BUS DIAMETER	A	B	C	
B7875-A	6"	1.981 - 2.042	12.38	7.56	3.25	52.5

© 2011, AFL, all rights reserved. PP-3-00234, Revision 0, 3.14.11
Specifications are subject to change without notice.

DOSSERT®

TYPE B7096-A Series

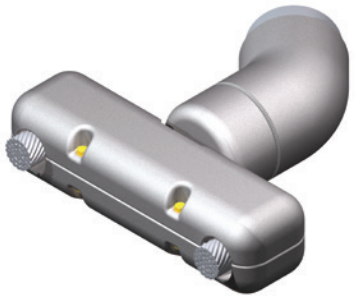

Adapter, Welded, NPS to Three Conductor Bundle
Recommended for Voltages up to 765 kV

Welded 45° end adapter is designed to be corona free for 765 kV operation. Assembly consists of 45° elbow, end connector, two terminals, corona shields and hardware. Connector angle may be rotated to permit 45° take-off for horizontal or vertical planes.

Material

Aluminum Alloy

Hardware

Yellow anodized aluminum bolts, nuts, washers, lockwashers.

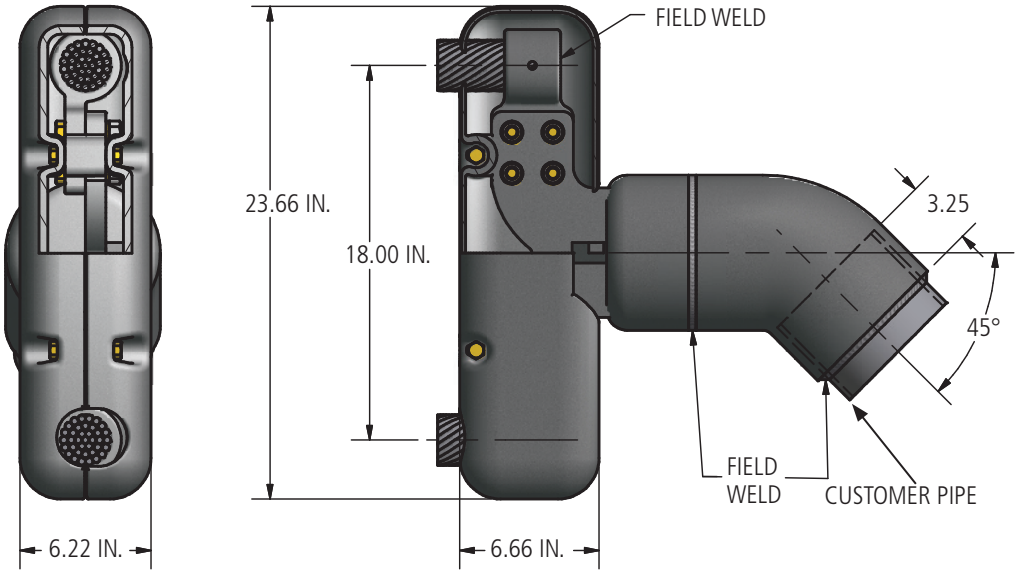

Ordering Information

CATALOG NUMBER	CONDUCTOR SIZE		NOMINAL WEIGHT LBS
	TUBULAR BUS SPS & EHPS	STRAIN BUS	
B7096-A	6"	2.4	46.2

© 2011, AFL, all rights reserved. PP-3-00227, Revision 0, 3.14.11
Specifications are subject to change without notice.

DOSSERT®

TYPE B7566, B7565 Series

Tee Adapter, Welded, NPS to Two Conductors
Recommended for Voltages up to 765 kV

Welded tee adapter is desgined to be corona free for 765 kV operation. Assembly consists of welded tee connector, two terminals and corona shield.

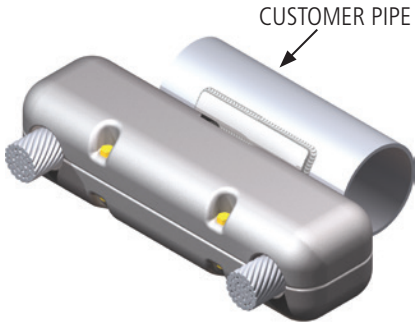

B7566-A

Material

Aluminum Alloy

Yellow anodized aluminum bolts, nuts, washers, lockwashers.

Hardware

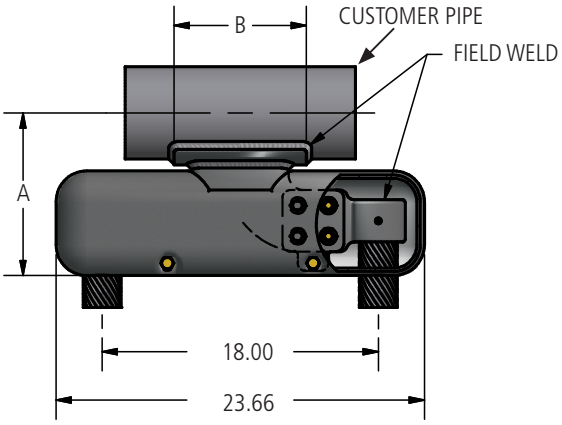

B7566-A

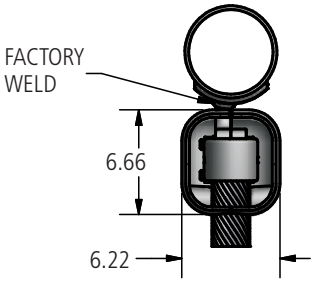

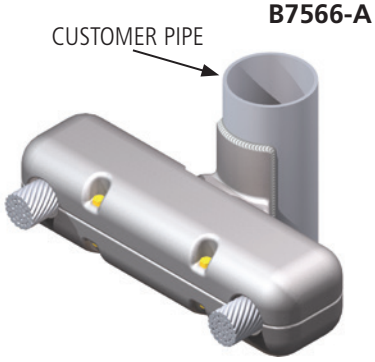

B7565-A

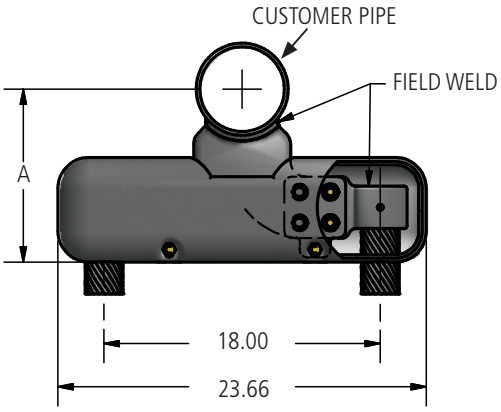

B7565-A

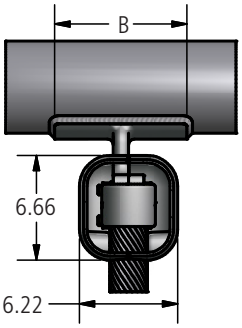

Ordering Information

CATALOG NUMBER	CONDUCTOR SIZE		DIMENSIONS IN INCHES		NOMINAL WEIGHT LBS
	TUBULAR BUS SPS & EHPS	STRAIN BUS	A	B	
B7566-A	5"	2.4	11.31	8.62	27.0
	6"				
B7565-A	5"		11.97		27.8
	6"				

© 2011, AFL, all rights reserved. PP-3-00230, Revision 0, 3.14.11
Specifications are subject to change without notice.

DOSSERT®

TYPE B7876, B7882 Series

Tee Adapter, Welded, NPS to Three or Four Conductor Bundle
Recommended for Voltages up to 765 kV

Welded tee adapter is designed to be corona free for 765 kV operation. Assembly consists of welded tee connector, three or four terminals and corona shields.

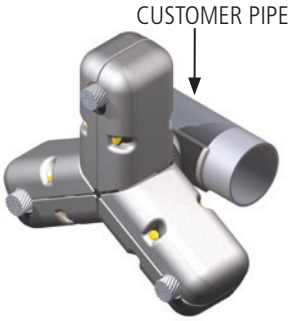

B7876-A

Material

Aluminum Alloy

Hardware

Yellow anodized aluminum bolts, nuts, washers, lockwashers.

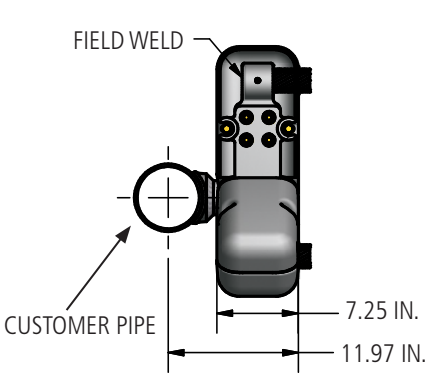

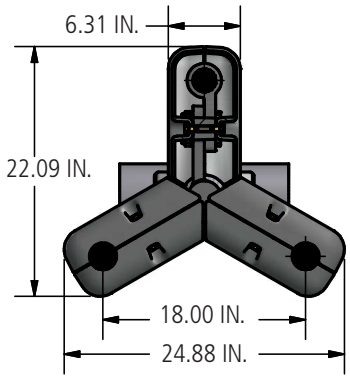

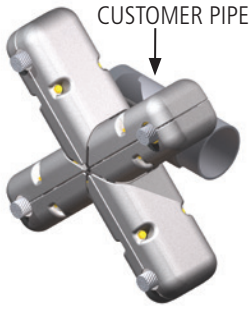

B7882-A

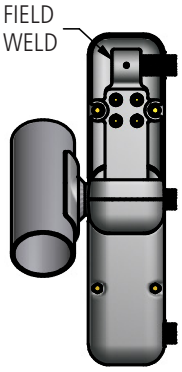

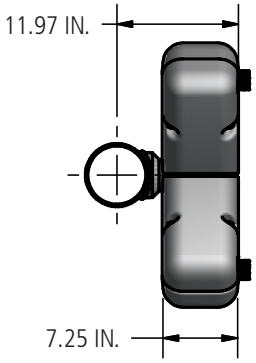

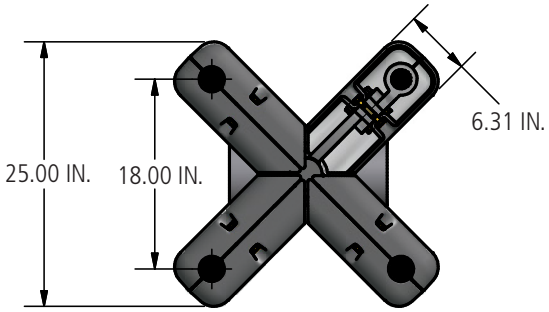

Ordering Information

CATALOG NUMBER	CONDUCTOR SIZE		NOMINAL WEIGHT LBS	NUMBER OF STRAIN BUS
	TUBULAR BUS SPS & EHPS	STRAIN BUS		
B7876-A	5" 6"	1.981 - 2.042	47.9	3
B7882-A	5" 6"	1.737 - 1.792	68.3	4
B7882-B	5" 6"	1.361 - 1.423	68.3	4
B7882-C	5" 6"	1.258 - 1.340	68.3	4

© 2011, AFL, all rights reserved. PP-3-00235, Revision 1, 3.21.17
Specifications are subject to change without notice.

DOSSERT®

TYPE WT-EHV-AA

Tee Connector
Recommended for Voltages up to 765 kV



Welded tee connector is designed to be corona free for 765 kV service.

Material

Aluminum Alloy

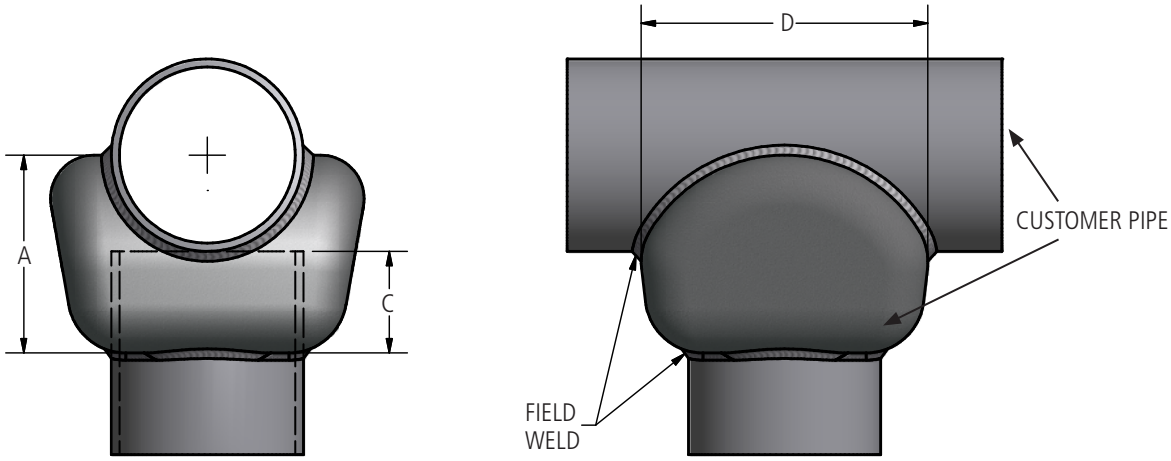

Ordering Information

CATALOG NUMBER	SPS	DIMENSIONS IN INCHES		
		A	C	D
WT600-600-EHV-AA	6	6 13/16	3 1/2	9 7/8

© 2011, AFL, all rights reserved. PP-3-00552, Revision 1, 11.8.2022
Specifications are subject to change without notice.

DOSSERT®

TYPE WRP2CA-20-EHV-AA, WRP2CA-45-EHV-AA

Recommended for Voltages up to 765 kV

Tee connector is designed to be corona free for 765 kV service.

Material

Aluminum Alloy

Hardware

Yellow anodized aluminum bolts, nuts, washers, lockwashers.

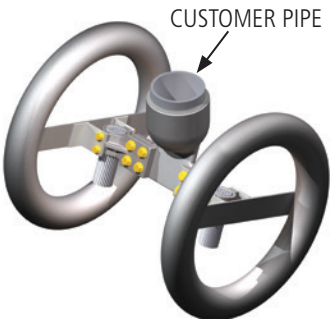

WRP2CA-20-EHV-AA

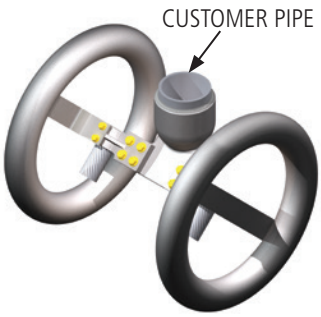

WRP2CA-45-EHV-AA

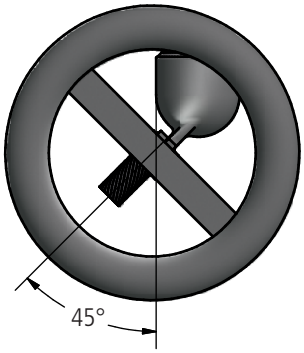

WRP2CA-45-EHV-AA

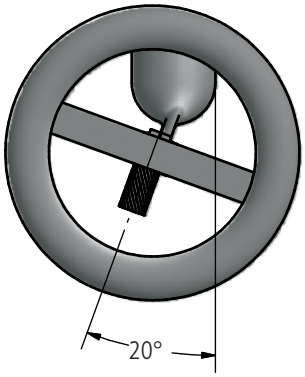

WRP2CA-20-EHV-AA

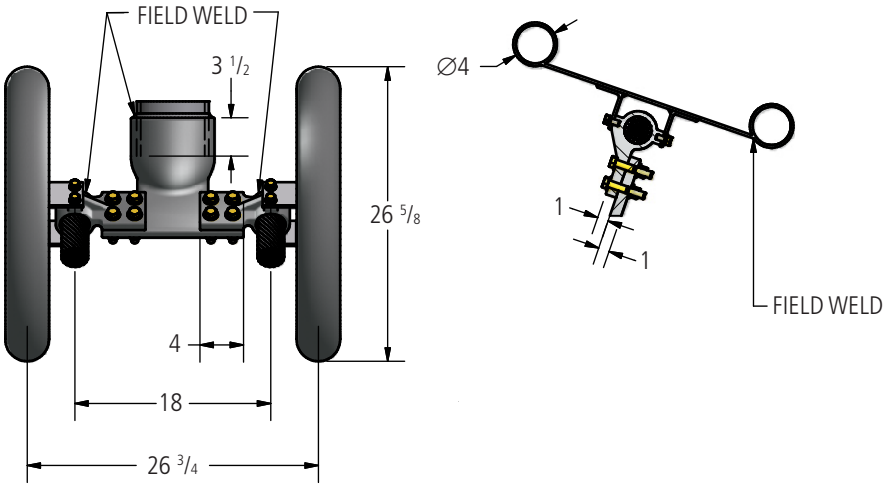

Ordering Information

CATALOG NUMBER	SPS	CONDUCTOR DIAMETER
WRP2CA-600-240R-18-45-EHV-AA	6	2.4
WRP2CA-600-240R-18-20-EHV-AA	6	

© 2011, AFL, all rights reserved. PP-3-00543, Revision 0, 3.14.11
Specifications are subject to change without notice.

DOSSERT®

TYPE WPC-4S4-AA-WH, WPCA-4S4-90-AA-WH

Welded Terminal
Recommended for Voltages up to 765 kV

Terminal pad is designed to be corona free for 765 kV operation.

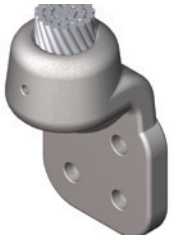

WPC-4S4-AA-WH



WPCA-4S4-90-AA-WH

Material

Aluminum Alloy

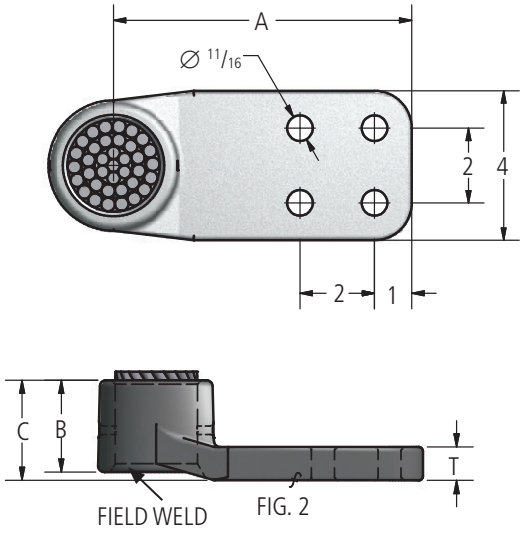

WPCA-4S4-90-AA-WH

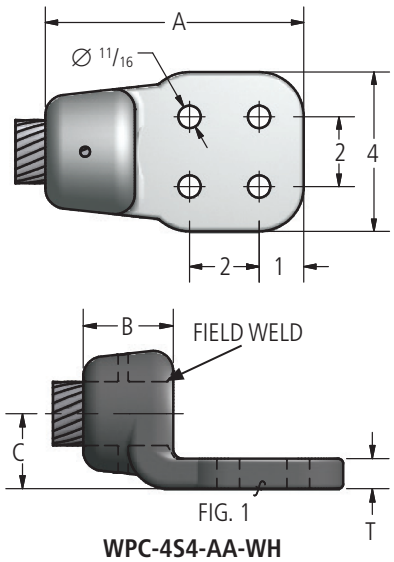

WPC-4S4-AA-WH

Ordering Information

CATALOG NUMBER	ACSR RANGE	FIGURE NUMBER	DIMENSIONS IN INCHES			
			A	B	C	T
WPC95A-4S4-AA-WH	715.5(26/7) - 954(45/7) MCM	1	6 1/4	1 3/4	1 1/2	1
WPCA95A-4S4-90-AA-WH	715.5(26/7) - 954(45/7) MCM	2	6	1 3/4	2	5/8
WPC135A-4S4-AA-WH	1192.5(54/19) - 1351.5(45/7) MCM	1	6 1/2	2	1 5/8	5/8
WPCA135A-4S4-90-AA-WH	1192.5(54/19) - 1351.5(45/7) MCM	2	5 5/8	2	2 1/4	5/8
WPC240R-4S4-AA-WH	2515(76/19) MCM	1	7 1/4	2 3/4	2 1/2	1
WPCA240R-4S4-90-AA-WH	2515(76/19) MCM	2	8	2 3/4	3	1

© 2011, AFL, all rights reserved. PP-3-00530, Revision 0, 3.14.11
Specifications are subject to change without notice.

DOSSERT®

TYPE WPCA-20-AA-WH, WPCA-45-AA-WH, WPCA-75-AA-WH

Terminal pad is designed to be corona free for 765 kV operation.

Material

Aluminum Alloy

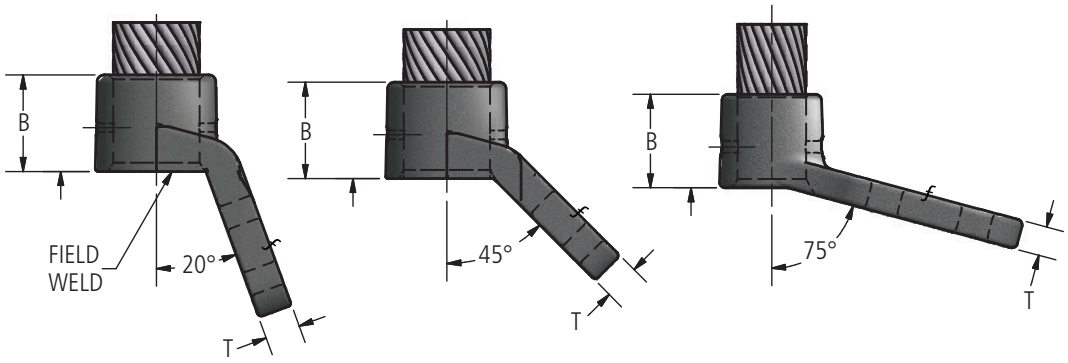

WPCA-20-AA-WH WPCA-45-AA-WH WPCA-75-AA-WH

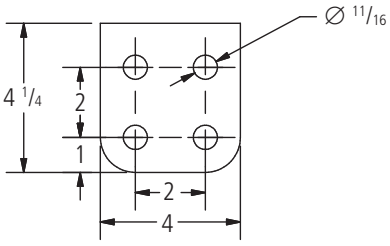



WPCA-20-AA-WH



WPCA-45-AA-WH



WPCA-75-AA-WH

Ordering Information

CATALOG NUMBER	ACSR RANGE	DIMENSIONS IN INCHES	
		B	T
WPCA95A-4S4-75-AA-WH	715.5(26/7) - 954(45/7) MCM	1 3/4	5/8
WPCA135A-4S4-75-AA-WH	1192.5(54/19) - 1351.5(45/7) MCM	2	5/8
WPCA240R-4S4-20-AA-WH	2034(72/7) - 2312(76/19) MCM	2 3/4	1
WPCA240R-4S4-45-AA-WH	2034(72/7) - 2312(76/19) MCM	2 3/4	1

© 2011, AFL, all rights reserved. PP-3-00533, Revision 1, 12.16.13
Specifications are subject to change without notice.

DOSSERT®

TYPE WPCA-15L-AA-WH, WPCA-15R-AA-WH, WPCA-15L-20-AA-WH, WPCA-15R-20-AA-WH

Welded Terminal

Angled welded terminal is designed for 2.4 diameter Aluminum conductor.

Material

Aluminum Alloy



WPCA-15L-AA-WH



WPCA240-4S4-15L-AA-WH



WPCA240R-4S4-15R-AA-WH

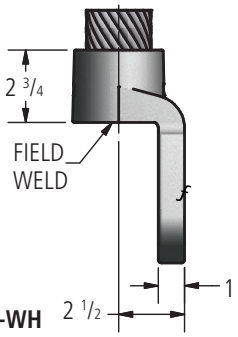



WPCA-15R-AA-WH



WPCA240-4S4-15L-AA-WH



WPCA240R-4S4-15R-AA-WH

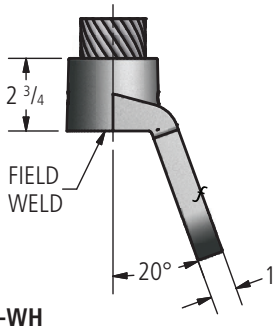



WPCA-15L-20-AA-WH

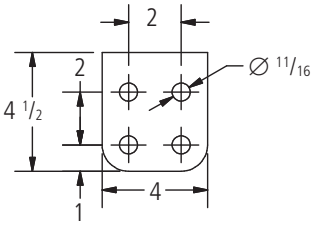

PAD DIMENSIONS



WPCA-15R-20-AA-WH

Ordering Information

CATALOG NUMBER	REFERENCE DRAWINGS
WPCA-15L-AA-WH	D-4475
WPCA-15R-AA-WH	D-4476
WPCA-15L-S1-AA-WH	D-4491
WPCA-15R-S1-AA-WH	D-4492

© 2011, AFL, all rights reserved. PP-3-00531, Revision 1, 12.16.13
Specifications are subject to change without notice.

DOSSERT®

TYPE B7094, B7567 Series

End Terminal, Welded, NPS to Flat Pad
Recommended for Voltages up to 765 kV

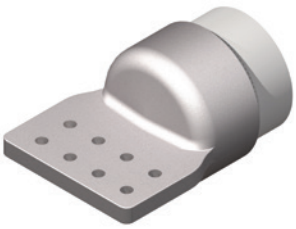

B7094-A

Terminal is designed to be corona free for 765 kV operation when bolted to B7001 terminal connectors. Assembly consists of terminal and aluminum terminal hardware.

Material

Aluminum Alloy

Hardware

Yellow anodized aluminum bolts, nuts, washers, lockwashers.



B7567-A

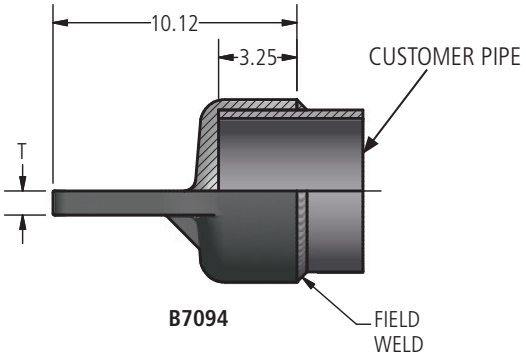

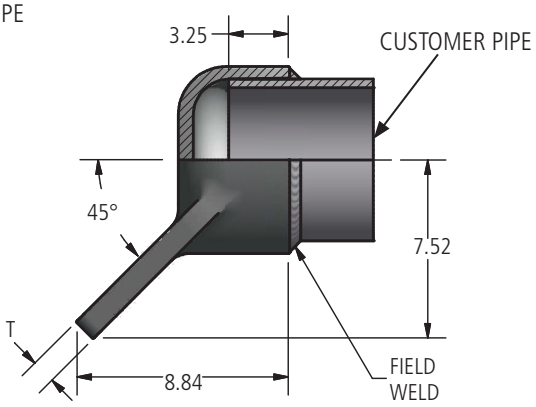

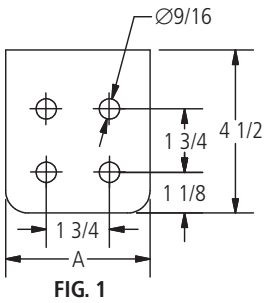

FIG. 1

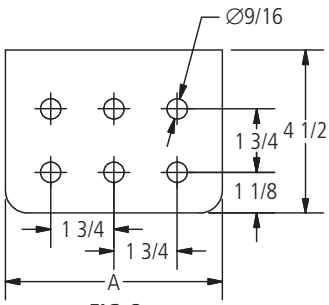

FIG. 2

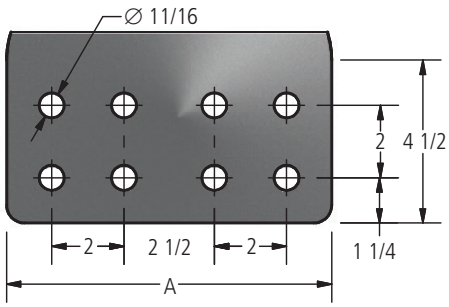

FIG. 3

Ordering Information

CATALOG NUMBER	FIG. NO.	SPS / EHPS	DIMENSIONS IN INCHES	
			A	T
B7094-A	3	6	9	1
B7094-B	3	6	9	1 1/4
B7094-C	2	6	5	1
B7094-D	1	6	4	1
B7094-E	2	6	6	1 1/4
B7567-A	3	6	9	1

© 2011, AFL, all rights reserved. PP-3-00217, Revision 1, 12.16.13
Specifications are subject to change without notice.

DOSSERT®

TYPE B7001 Series



Recommended for Voltages up to 765 kV

Terminal connector is designed to be corona free for 765 kV operation when bolted to equipment terminal. Assembly consists of connector, two terminals, corona shield and hardware.

Material

Aluminum Alloy

Hardware

Yellow anodized aluminum bolts, nuts, washers, lockwashers.

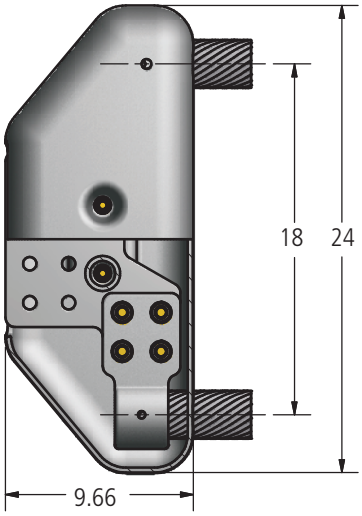

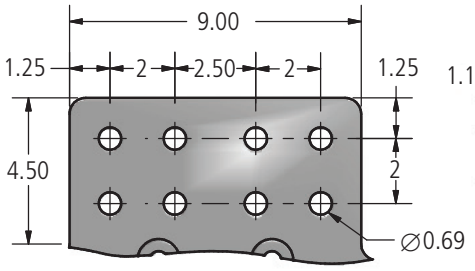

FIG. 1

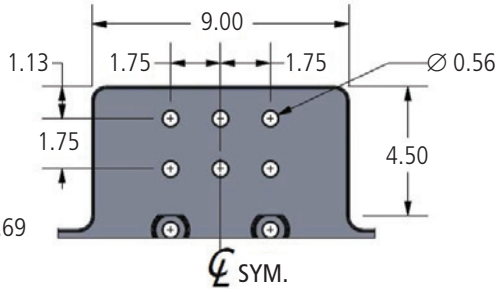

FIG. 2

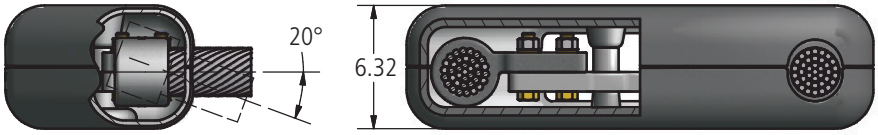

Ordering Information

CATALOG NUMBER	CONDUCTOR SIZE STRAIN BUS DIAMETER IN INCHES	TERMINAL ANGLE	NOMINAL WEIGHT LBS	FIG. NO.
B7001-A	2.4	STR.	28.0	1
B7001-B	2.4	20°	28.0	1
B7001-6N4-A	2.4	STR.	28.0	2

© 2011, AFL, all rights reserved. PP-3-00228, Revision 2, 9.25.18
Specifications are subject to change without notice.

DOSSERT®

TYPE WP2CA-45-EHV-AA Series



Corona Free Terminal Connector
Recommended for Voltages up to 765 kV

Terminal connector is designed to be corona free for 765 kV operation when bolted to equipment terminal. Assembly consists of connector, two terminals, corona shield and hardware.

Material

Aluminum Alloy

Hardware

Yellow anodized aluminum bolts, nuts, washers, lockwashers.

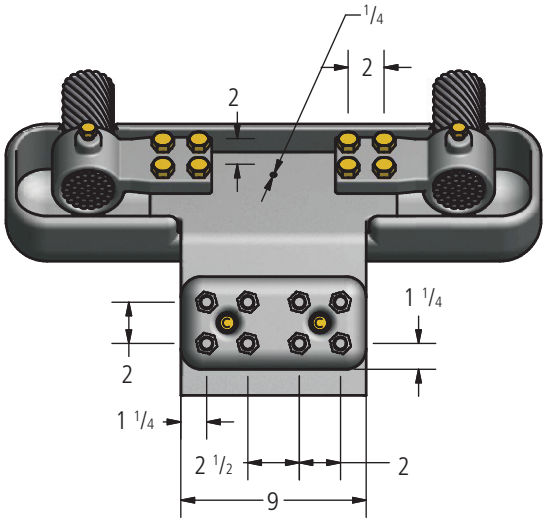

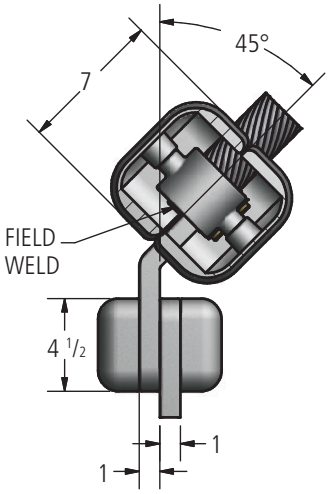

Ordering Information

CATALOG NUMBER	CABLE SIZE
WP2CA240R-9-41/2-15-45-EHV-AA	2.40 DIA

© 2011, AFL, all rights reserved. PP-3-00527, Revision 0, 3.15.11
Specifications are subject to change without notice.

DOSSERT®

TYPE B7583-A Series

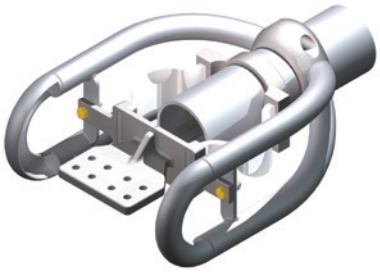

Welded Expansion Terminal
Recommended for Voltages up to 765 kV

Expansion terminal is designed to be corona free for 765 kV operation. Expansion terminal is designed for a maximum bus run of 100 feet (30.5m) operationg between a minimum temperature of -20°F (-28°C) and a maximum temperature of 200°F (93.3°C). Assembly consists of expansion terminal, corona rings and hardware. Stainless steel chatter springs are supplied with corona ring assembly.

Material

Aluminum Alloy

Hardware

Yellow anodized aluminum bolts, nuts, washers, lockwashers.

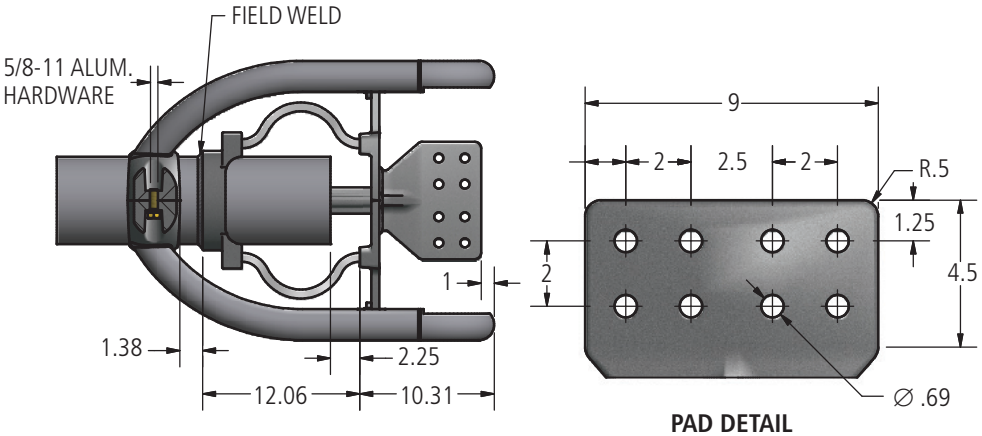

PAD DETAIL

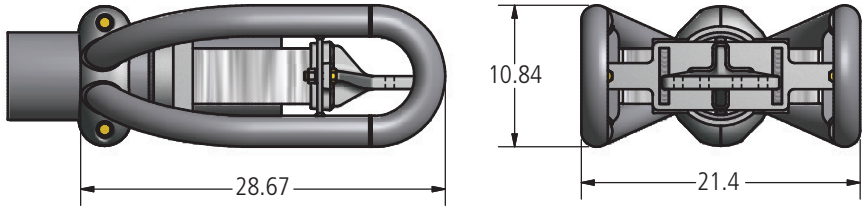

Ordering Information

CATALOG NUMBER	CONDUCTOR SIZE STRAIN BUS DIAMETER IN INCHES	NOMINAL WEIGHT LBS
B7583-A	6"	49.0

© 2011, AFL, all rights reserved. PP-3-00233, Revision 0, 3.15.11
Specifications are subject to change without notice.

DOSSERT®

TYPE B7878-A Series



Terminal Connector - Three Bundle
Recommended for Voltages up to 765 kV

Terminal connector is designed to be corona free for 765 kV operation when bolted to equipment terminal. Assembly consists of connector, three terminals, corona shield and hardware.

Material

Aluminum Alloy

Hardware

Yellow anodized aluminum bolts, nuts, washers, lockwashers.

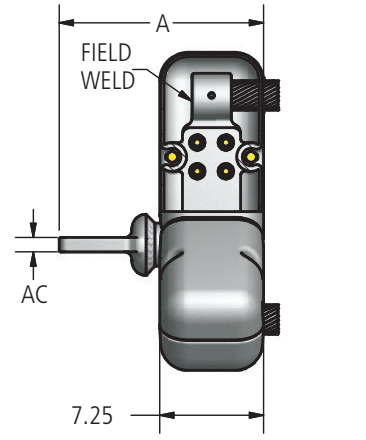

FIG. 1

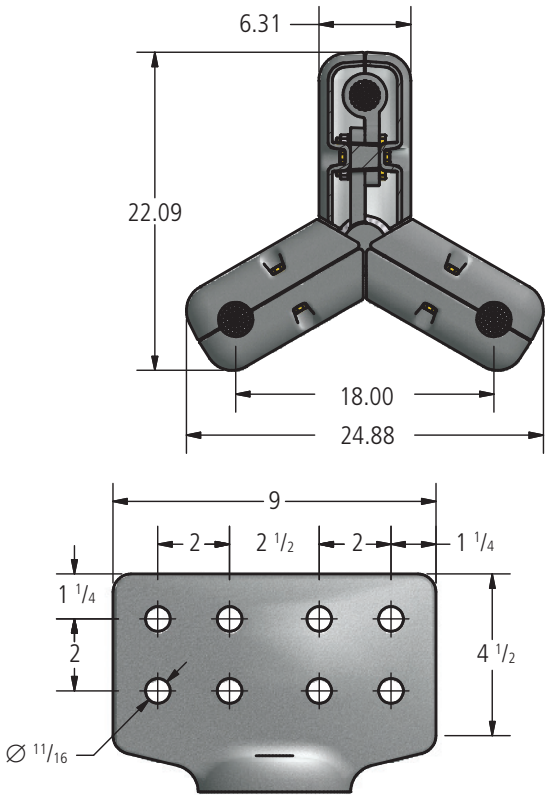

FIG. 2

Ordering Information

CATALOG NUMBER	FIGURE NO.	CONDUCTOR SIZE	DIMENSIONS IN INCHES		NOMINAL WEIGHT LBS
		STRAIN BUS DIAMETER IN INCHES	A	AC	
B7878-A	2	1.981 - 2.042	14.19	1.00	51.9
B7878-B	1	1.981 - 2.042	14.19	1.00	49.6

© 2011, AFL, all rights reserved. PP-3-00236, Revision 0, 3.15.11
Specifications are subject to change without notice.

DOSSERT®

TYPE 34640-EHV Series

Ground Stud, Welded

Ground stud is designed to be corona free for 765 kV operation.



34640-EHV

Material

Aluminum Alloy

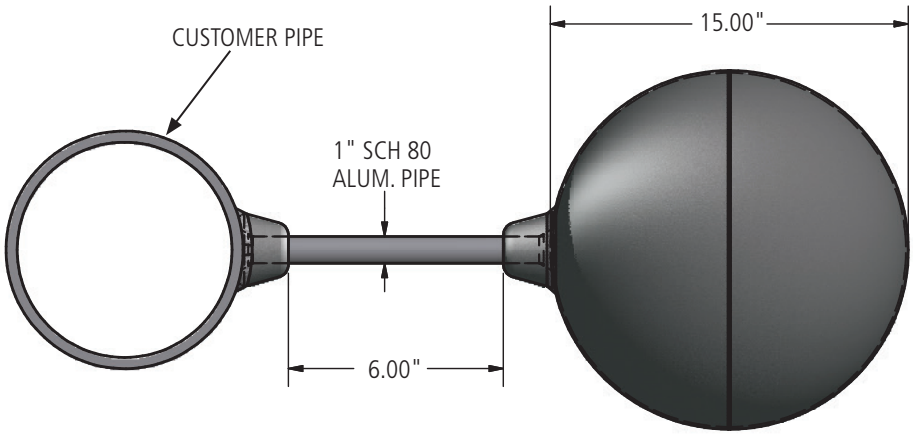

Ordering Information

CATALOG NUMBER	CONDUCTOR SIZE TUBULAR SIZE SPS & EHPS	NOMINAL WEIGHT LBS
34640EHV	4" to 6"	16.0

© 2011, AFL, all rights reserved. PP-3-00184, Revision 0, 3.15.11
Specifications are subject to change without notice.

DOSSERT®

TYPE C6999-A, B7073 Series

Spacer Clamps

Recommended for Voltages up to 765 kV

Two- and four-conductor spacers are designed to be corona free for 765 KV operation. Spacers are not recommended for use on transmission lines.



C6999-A

Material

Aluminum Alloy

Hardware

Yellow anodized aluminum bolts, nuts, washers, lockwashers.

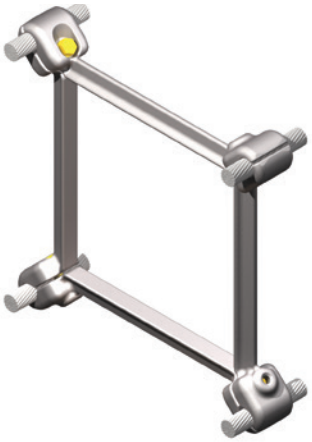

B7073

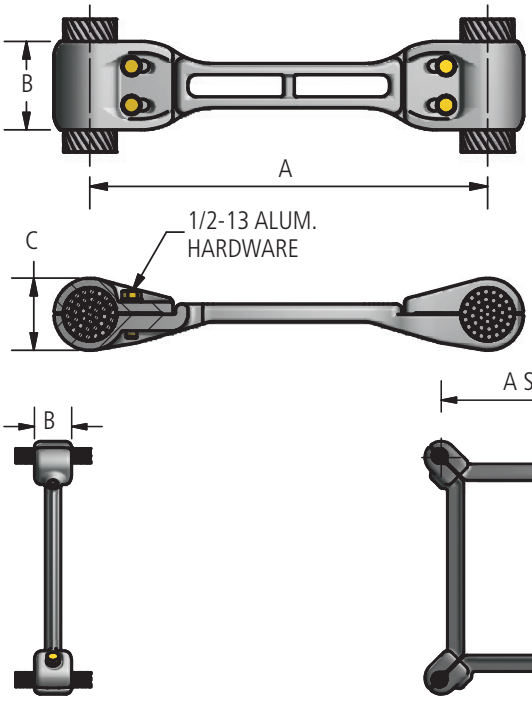

Ordering Information

CATALOG NUMBER	STRAIN BUS	DIMENSIONS IN INCHES			NOMINAL WEIGHT LBS
		A	B	C	
C6999-A	2.4	18.00	4.00	3.25	6.4
C6999-B	2.311	17.72	4.00	3.25	6.4

CATALOG NUMBER	CONDUCTOR SIZE			DIMENSIONS IN INCHES		NOMINAL WEIGHT LBS
	KCMIL	STRAND		A	B	
		AL.	ST.			
B7073-A	954.0	45	7	18.00	1.165	13.2
B7073-B	1351.5	45	7	18.00	1.385	12.4
B7073-C	795 MCM	36	6	18.00	1.026	13.2
B7073-D	556.5 MCM	26	7	18.00	0.927	13.6
B7073-E	1300 MCM	45	7	17.72	1.312	12.8
B7073-F	795 MCM	30	19	18.00	1.140	12.8
B7073-G	1431 MCM	45	7	10.00	1.379	9.6
B7073-H	1450 MCM	45	7	18.00	1.526	9.4

© 2011, AFL, all rights reserved. Revision 0, 3.15.11
Specifications are subject to change without notice.

DOSSERT®

TYPE 1705, B7384 Series

Internal and External Bus Damper for Tubular Bus
Recommended for Voltages up to 765 kV

Internal bus damper is designed to be corona free for 765 kV operation. Damper is designed to be installed inside bus to be corona free and to present a "clean" appearance to the substation.



1705

Material

Aluminum Alloy and Galvanized Steel Damper Weights

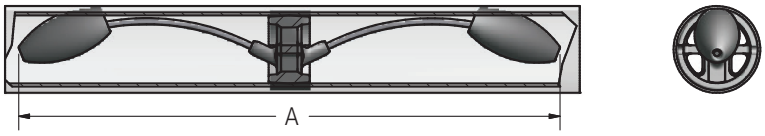

1705-XXX

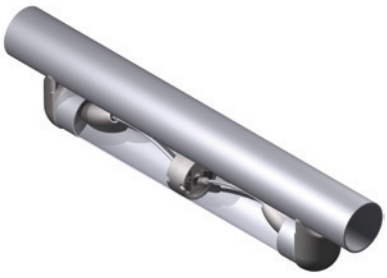

B7384-A

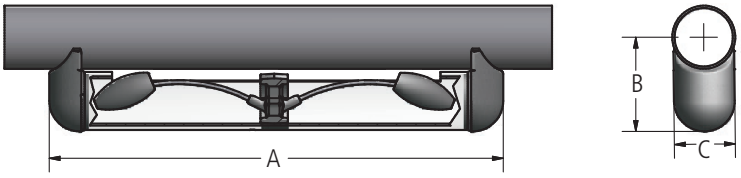

B7384

Ordering Information

INTERNAL DAMPER				
CATALOG NUMBER	CONDUCTOR SIZE TUBULAR BUS SPS & EHPS	DIMENSIONS IN INCHES	NOMINAL WEIGHT LBS	
		A	ALUM	TOTAL
1705-504	5 SPS	36.88	2.7	13.3
1705-576	6 EHPS	35.25	3.3	14.0
1705-607	6 SPS	35.25	4.0	14.7
1705-700	8" O.D. (1/2" Wall)	36.88	3.2	13.8
1705-725	8" O.D. (3/8" Wall)	36.88	3.2	13.8
1705-762	8 EHPS	36.88	3.3	13.9
1705-798	8 SPS	36.88	3.4	14.0

EXTERNAL DAMPER						
CATALOG NUMBER	CONDUCTOR SIZE TUBULAR BUS SPS & EHPS	DIMENSIONS IN INCHES			NOMINAL WEIGHT LBS	
		A	B	C	ALUM	TOTAL
B7384-A	5"	40.00	8.50	5.56	23.9	34.5
B7384-B	6"	40.00	10.12	6.62	28.9	39.5
B7384-C	8"	40.00	12.19	8.00	37.4	37.4

© 2011, AFL, all rights reserved. PP-3-00160, Revision 0, 3.15.11
Specifications are subject to change without notice.

765 kV
Stud Connector

DOSSERT®

TYPE B7004-A Series



Stud Connector, Straight, Stud to Two Conductor Bundle
Recommended for Voltages up to 765 kV

Stud connectors are designed to be corona free for 765 kV operation. Assembly consists of stud connector, two terminals, corona shields and hardware. Stud sizes other than those shown can be supplied if required.

Material

Aluminum Alloy

Hardware

Yellow anodized aluminum bolts, nuts, washers, lockwashers.

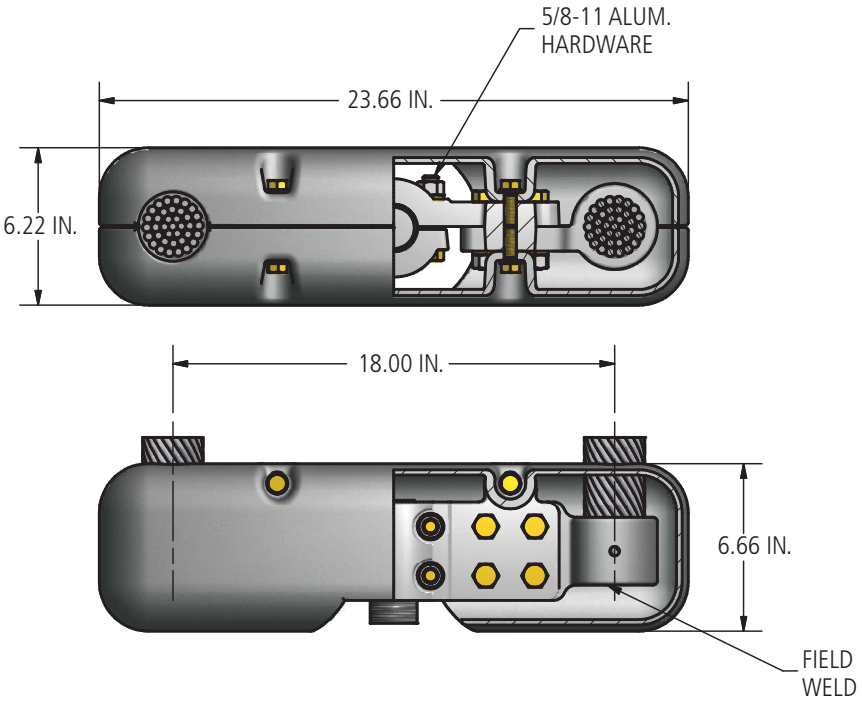

Ordering Information

CATALOG NUMBER	STUD SIZE		CONDUCTOR SIZE	NOMINAL WEIGHT LBS
	DIAMETER	THREADS PER INCH	STRAIN BUS DIAMETER	
B7004-A	2	12	2.4	28.4
B7004-B	3	12	1.423	28.4
B7004-C	3	12	2.4	27.9
B7004-D	3.15	0	1.855	27.6

© 2011, AFL, all rights reserved. PP-3-00220, Revision 0, 3.15.11
Specifications are subject to change without notice.

DOSSERT®

TYPE B7074-A Series

Stud Connector – 45°, 90°, Stud to Two Conductors
Recommended for Voltages up to 765 kV



Angle stud connectors are designed to be corona free for 765 kV operation. Assembly consists of stud connector, two terminals, corona shields and hardware. Stud sizes other than those shown can be supplied if required.

Material

Aluminum Alloy

Hardware

Yellow anodized aluminum bolts, nuts, washers, lockwashers.

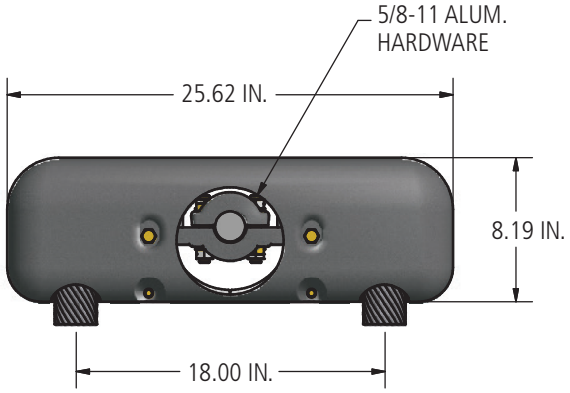

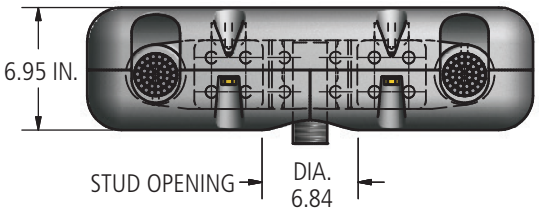

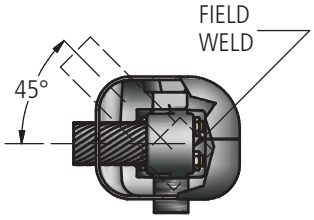

Ordering Information

CATALOG NUMBER	STUD SIZE		CONDUCTOR SIZE		TERMINAL ANGLE	NOMINAL WEIGHT LBS
	DIAMETER	THREADS PER INCH	STRAIN BUS DIAMETER IN INCHES			
			MIN	MAX		
B7074-A	2	12	2.4		90°	33.0
B7074-B	2	12	2.4		45°	33.0
B7074-C	3	12	1.361	1.423	90°	33.4

© 2011, AFL, all rights reserved. PP-3-00225, Revision 0, 3.15.11
Specifications are subject to change without notice.

765 kV
Stud Connector

DOSSERT®
TYPE B7108 Series



Stud Connector – 90°, Stud to Two Conductors
Recommended for Voltages up to 765 kV

Thru stud connectors are designed to be corona free for 765 kV operation. Assembly consists of a stud connector, four terminals, corona shields and hardware. Stud sizes other than those shown can be supplied if required.

Material

Aluminum Alloy

Hardware

Yellow anodized aluminum bolts, nuts, washers, lockwashers.

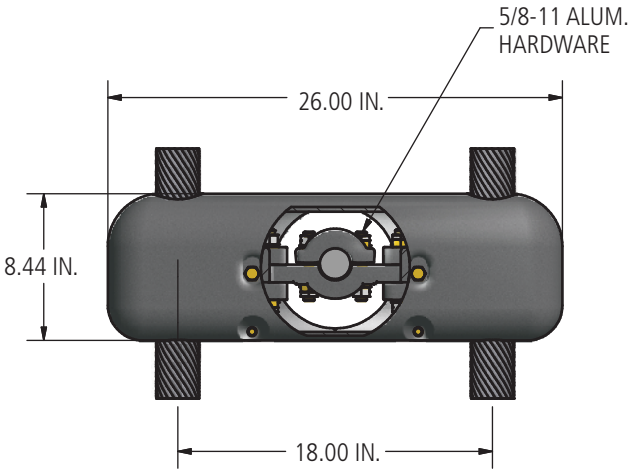

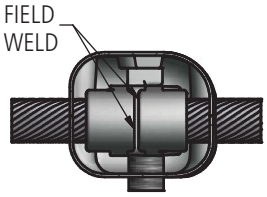

Ordering Information

CATALOG NUMBER	STUD SIZE		CONDUCTOR SIZE STRAIN BUS DIAMETER IN INCHES	NOMINAL WEIGHT LBS
	DIAMETER	THREADS PER INCH		
B7108-A	2	12	2.4	40.2
B7108-C	2	12	2.344	37.28

© 2011, AFL, all rights reserved. PP-3-00229, Revision 1, 9.4.18
Specifications are subject to change without notice.

DOSSERT®

TYPE B7879-A, B7880 Series

Stud Connector, Straight, Stud to Three Conductor Bundle
Recommended for Voltages up to 765 kV

Stud connectors are designed to be corona free for 765 kV operation. Assembly consists of stud connector, three terminals, corona shields and hardware. Stud sizes other than those shown can be supplied if required.

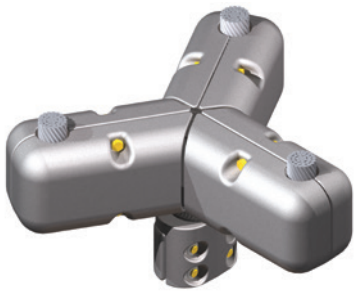

B7879-A

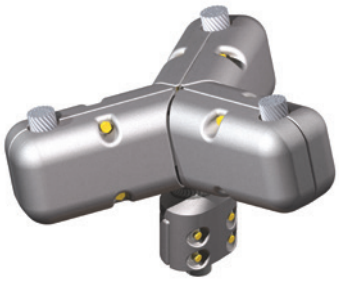

B7880-A

Material

Aluminum Alloy

Hardware

Yellow anodized aluminum bolts, nuts, washers, lockwashers.

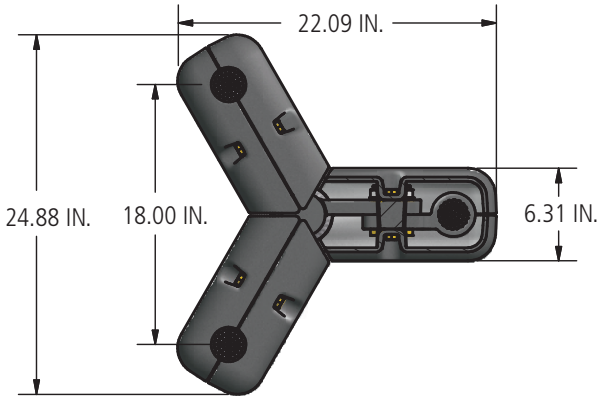

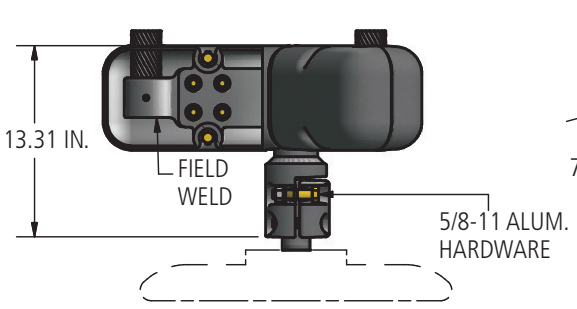

STRAIGHT CONNECTOR
B7879

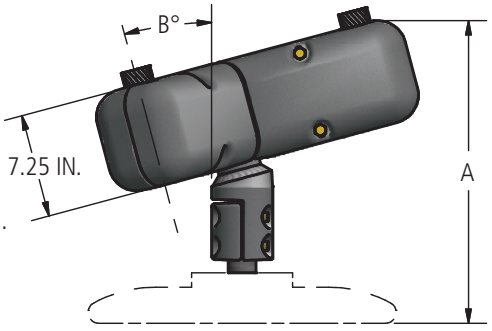

ANGLED CONNECTOR
B7880

Ordering Information

CATALOG NUMBER	STUD SIZE		CONDUCTOR SIZE	DIMENSIONS IN INCHES (FOR ANGLED STUD CONNECTOR ONLY)		NOMINAL WEIGHT LBS
	DIAMETER	THREADS PER INCH	STRAIN BUS DIAMETER IN INCHES	A	B	
B7879-A	2	12	1.981 - 2.042	-	-	55.4
B7880-A	2	12	1.981 - 2.042	15.43	15°	56.2
B7880-B	2	12	1.981 - 2.042	17.8	45°	57.7

© 2011, AFL, all rights reserved. PP-3-00237, Revision 0, 3.15.11
Specifications are subject to change without notice.

765 kV
Stud Connector

© 2011, AFL, all rights reserved. PP-3-00237, Revision 0, 3.15.11
Specifications are subject to change without notice.

Table of Contents

Bus Conductors

Bus Conductors Table of Contents 645
Benefits of Aluminum Bus Conductors 647
Alloys and Tempers 647
Special Finishes and Packaging 647
Factors to Consider When Selecting a Bus Conductor 647
Frequently Asked Questions 648
Bus Packaging Options 649
Seamless Bus Pipe 650
Seamless Bus Tube 652
Rectangular Bar—Sharp Corners 654
Rectangular Bar—Rounded Corners 655
Integral Web Bus Conductor (IWBC) 658
Universal Angle Bus Conductor (UABC) 660
Mechanical Properties of Aluminum Bus Conductors 662
Bending and Forming 663
Deflection Values – Schedule 40 Aluminum Pipe 664
Deflection Values – Schedule 80 Aluminum Pipe 665
Welding Aluminum Bus to Aluminum Connectors 666
General Welding Specifications—Tubular Aluminum Bus Conductor 667

© 2011, AFL, all rights reserved. PP-3-00213, Revision 4, 3.30.2023
Specifications are subject to change without notice.

© 2011, AFL, all rights reserved. PP-3-00213, Revision 4, 3.30.2023
Specifications are subject to change without notice.

Benefits of Aluminum Bus Conductor

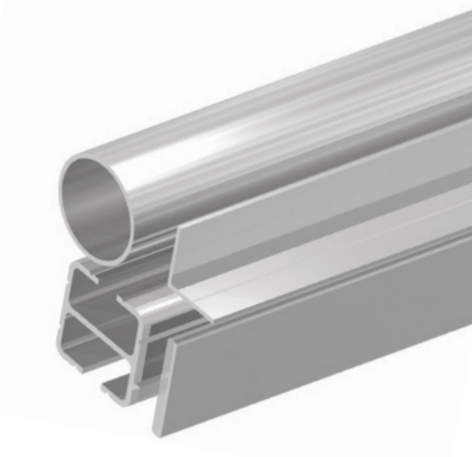

- Only 1/3 the weight of copper
- Highly corrosion resistant
- Dissipates heat rapidly and evenly
- Very strong yet lightweight
- Easy to fabricate
- Conducts equivalent loads of electric power with one half as much material weight as copper

Today, aluminum is one of the most widely specified conductive materials used in the manufacture and construction of electrical power distribution components and equipment.

Typical applications presently using aluminum conductors include bus duct, bus bar, panel boards, switchgear, isolated phase bus and a host of other similarly purposed products installed virtually everywhere – from electric utility switchyards to substations construction all over the world.

Alloys and Tempers

The most commonly used alloys are 6063, 6061, and 6101. Alloy 6063 has been widely used for outdoor high voltage substation bus because of its excellent mechanical and electrical properties. Where high strength and lower conductivity is called for, alloy 6061 bus is used. Where high conductivity is required, with a minimum sacrifice in mechanical properties, alloy 6101 is used. AFL aluminum bus conductors are manufactured to meet appropriate ASTM specifications. These include B-241-00 - Aluminum Alloy Seamless Pipe and Tube for Alloys 6063 and 6061; and B-317-00 - Aluminum Alloy Extruded Bar, Rod, Pipe and Structural Shapes for Electrical Purposes for Alloy 6101.

The tempering process is an application that hardens or strengthens the metal by applying heat and/or cooling the metal. The basic temper consists of a letter followed by one or more numbers. The most common tempers are T6, T61, and T63. T6 is solution heat treated, and artifically aged to maximum mechanical property levels. T61 is an overaged temper with higher conductivity, but lower mechanical properties than T6. T63 is an "in-between" temper with higher conductivity than T6, but less than T61.

The most common alloy and temper combinations are 6063-T6, 6061-T6, 6101-T6, 6101-T61, and 6101-T63. For other alloys or tempers, please contact your AFL Sales Representative.

Special Finishes and Packaging

AFL aluminum bus conductor is manufactured with an EHV (Extra-High Voltage) finish and EHV packaged. EHV packaging consists of inter-leafed paper and cardboard boxed.

Factors to Consider When Selecting a Bus Conductor

A variety of factors must be considered in bus design. In all applications, considerations include DC or AC current, ampacity required, frequency, operating voltage, allowable voltage drop, maximum possible short circuit currents, available space, and the taps and connections required. If large currents are involved, factors affecting the economic current density must also be tabulated. And for outdoor substations, weather conditions such as possible maximum icing conditions, wind speeds and similar situations are important. Factors that may affect the design of industrial bus include ampacity for allowable temperature rise, voltage drop and power loss economics.

Conductivity

Pure aluminum has an electrical conductivity of 65 percent of the International Annealed Copper Standard. This is decreased a certain amount for any aluminum alloy, depending on the alloy's composition and temper. Internal heating of the conductor causes a loss of physical strength, which limits the conductor's current carrying capacity. Therefore, not only the temperature at which the alloy begins to anneal, but the time it takes to reach that temperature, must be taken into consideration.

Ampacity

For a given value of continuously flowing current, the temperature of a bus rises until the heat coming from the electrical losses in the bus is equal to the heat given off by radiation and convection.

Bus conductor ampacities are usually based on a continuous operating temperature of 30°C above an ambient temperature of 40°C.

Lengths

Bus Conductor is sold in various lengths ranging from 10 feet to 40 feet. Longer lengths are available in various sizes. Contact your AFL Sales Representative for more information.

© 2011, AFL, all rights reserved. PP-3-00213, Revision 4, 3.30.2023
Specifications are subject to change without notice.

Frequently Asked Questions

Do I use seamless pipe or structural pipe for substation construction?
For substation construction, seamless pipe should be used. Extruded structural pipe is produced with a bridge-type die. In the bridge die method of extrusion, the solid ingot is broken up and then rejoined in the weld chamber of the die. Thus, the pipe contains two or more "die welds" along its length. This pipe is intended for use in structural applications such as highway and bridge rails, chain link fence posts, sign structures, lighting brackets, etc. Structural pipe is not intended for applications involving fluid pressure or repeated flexure as there is a possibility of splitting along the die welds. Tubular bus in substations is frequently subjected to aeolian vibration which produces repeated flexure. Seamless pipe is extruded from hollow extrusion ingot by the die and mandrel method. The cross section is continuous; there are no die welds to separate under repeated flexure. For more information about structural pipe look at ASTM standard B-249-00 and for seamless pipe look at ASTM standard B-241-00.

What is the difference between bus pipe and bus tube?
Bus Pipe is manufactured to a "nominal" (not actual) diameter. The wall thickness is described by a "schedule." i.e. 4" Sch40. Bus Tube is a round hollow material manufactured to a specific outside diameter (O.D.) and wall thickness. It is produced to meet the end users requirements.

Does alloy and temper matter?
Yes, the alloy and temper specify the conductivity and mechanical properties.

What is the maximum length of bus conductor I can buy?
Most bus conductor is sold in lengths of 10 to 40 feet. Longer lengths are available in various sizes. Contact the AFL Commercial Team for any lengths over 40 feet.

Can I order custom sizes or custom extrusions?
Yes, contact the AFL Commercial Team for custom sizes of bus conductor and custom extrusions.

© 2011, AFL, all rights reserved. PP-3-00213, Revision 4, 3.30.2023
Specifications are subject to change without notice.

Bus Packaging Options

Bare - Batten - Bundled (BBB)





EHV Pack - Note interweave paper to protect



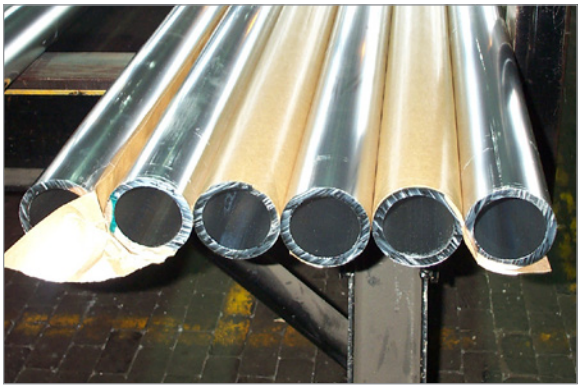

© 2011, AFL, all rights reserved. PP-3-00213, Revision 4, 3.30.2023
Specifications are subject to change without notice.

Seamless Bus Pipe

Seamless bus pipe is an extruded tubular product used to convey electricity. It is manufactured to a "nominal," not actual, inside diameter. The wall thickness is described by a "schedule." The schedules are determined by the American Standards Association.

Seamless bus pipe is generally made of 6063-T6 alloy in ANSI Schedule 40 pipe because of its excellent mechanical and electrical properties. 6061-T6 alloy tubular bus is used where high strength and lower conductivity are required.

Specification: B-241 (Seamless Pipe)

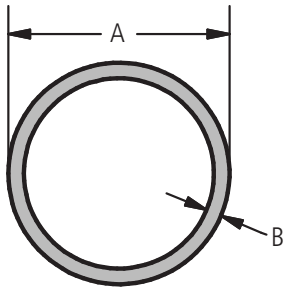

Note: For seamless bus tubing over 6 inches, see page 618.

Schedule 40

Nominal Size	Outside Diameter of Tube	Wall Thickness	Area	Weight
in.	in.	in.	sq. in.	lb/ft
SCH 40	A	B		
1	1.315	0.133	0.4939	0.581
1 1/4	1.660	0.140	0.6685	0.786
1 1/2	1.900	0.145	0.7995	0.940
2	2.375	0.154	1.0750	1.264
2 1/2	2.875	0.203	1.7040	2.004
3	3.500	0.216	2.2280	2.621
3 1/2	4.000	0.226	2.6800	3.151
4	4.500	0.237	3.1740	3.733
5	5.563	0.258	4.3000	5.057
6	6.625	0.280	5.5810	6.564
8	8.625	0.322	8.3990	9.879

Schedule 80

Nominal Size	Outside Diameter of Tube	Wall Thickness	Area	Weight
in.	in.	in.	sq. in.	lb/ft
SCH 80	A	B		
1	1.315	0.179	0.6388	0.751
1 1/4	1.660	0.191	0.8815	1.037
1 1/2	1.900	0.200	1.0680	1.256
2	2.375	0.218	1.4770	1.737
2 1/2	2.875	0.276	2.2540	2.650
3	3.500	0.300	3.0160	3.547
3 1/2	4.000	0.318	3.6780	4.326
4	4.500	0.337	4.4070	5.183
5	5.563	0.375	6.1120	7.188
6	6.625	0.432	8.4050	9.884
8	8.625	0.500	12.763	15.009

Ordering Instructions:

Step 1: Choose Nominal Size

Nominal Size	Size Code
1	100
1 1/4	125
1 1/2	150
2	200
2 1/2	250
3	300
3 1/2	350
4	400
5	500
6	600
8	800

Step 2: Choose Schedule

Schedule Number	Schedule Code
SCH 40	S40
SCH 80	S80

Step 3: Choose Alloy

Alloy Number	Alloy Code
6061	X
6063	Y
6101	Z

Step 4: Choose Temper

Temper	Temper Code
T6	T6
T61	T61
T63	T63

Step 5: Choose Packaging

Package Type	Package Code
Bare - Bat - Bundle (BBB)	B
EHV	E

See pictures on page 3

Step 6: Build Catalog Number

Size Code	+	Schedule Code	+	Alloy Code	+	Temper	+	Package Code

Example: To order 2 1/2 inch Schedule 40 6101 T-61 Alloy Bus Pipe with BBB packaging

250	+	S40	+	Z	+	T61	+	B

Completed Catalog Number is 250S40ZT61B.

© 2011, AFL, all rights reserved. PP-3-00213, Revision 4, 3.30.2023
Specifications are subject to change without notice.

Physical & Electrical Properties of Aluminum

Standard Pipe-Size Conductors at Typical Conductivities

Nominal Size in	A	B	Area sq in	Weight lbs/ft	Inductive reactance 1 ft spacing 60 Hz microhm/ ft	6063-T6				6061-T6			
	Outside Diameter of Tube in	Wall Thickness in				DC Resistance at 20°C microhms/ ft	60 Hz Rac/RDC at 70°C	AC Resistance at 70°C 60 Hz microhms/ft	Current Ratings Amp at 60 Hz (1) (2) (3) (4) Outdoor	DC Resistance at 20°C microhms/ft	60 Hz Rac/RDC at 70°C	AC Resistance at 70°C 60 Hz microhms/ft	Current Ratings Amp at 60 Hz (1) (2) (3) (4) Outdoor
Schedule 40 Pipe													
1	1.315	0.133	0.494	0.581	68.24	31.120	1.00039	36.580	681	38.360	1.00032	43.820	622
1 1/4	1.660	0.140	0.669	0.786	62.68	22.990	1.00050	27.030	859	28.340	1.00039	32.370	705
1 1/2	1.900	0.145	0.800	0.940	59.45	19.220	1.00064	22.600	984	23.690	1.00046	27.070	900
2	2.375	0.154	1.075	1.264	54.15	14.300	1.00082	16.820	1234	17.630	1.00055	20.140	1128
2 1/2	2.875	0.203	1.704	2.004	49.85	9.019	1.00220	10.620	1663	11.170	1.00150	12.710	1520
3	3.500	0.216	2.228	2.621	45.19	6.897	1.00300	8.126	2040	8.500	1.00180	9.725	1865
3 1/2	4.000	0.226	2.680	3.151	42.05	5.736	1.00380	6.761	2347	7.070	1.00220	8.091	2145
4	4.500	0.237	3.174	3.733	39.28	4.842	1.00470	5.712	2664	5.968	1.00270	6.834	2436
5	5.563	0.258	4.300	5.057	34.31	3.574	1.00680	4.224	3348	4.406	1.00400	5.051	3063
6	6.625	0.280	5.581	6.564	30.23	2.754	1.00950	3.263	4064	3.394	1.00540	3.897	3719
8	8.625	0.322	8.399	9.879	24.39	1.830	1.0162	2.167	5434	2.257	1.0086	2.590	5047
Schedule 80 Pipe													
1	1.315	0.179	0.639	0.751	68.81	24.060	1.00100	28.300	774	29.650	1.00075	33.840	707
1 1/4	1.660	0.191	0.882	1.037	63.14	17.440	1.00140	20.520	985	21.490	1.00105	24.570	901
1 1/2	1.900	0.200	1.068	1.256	59.89	14.390	1.00200	16.940	1137	17.730	1.00150	20.280	1039
2	2.375	0.218	1.477	1.737	54.56	10.400	1.00280	12.260	1446	12.820	1.00210	14.670	1322
2 1/2	2.875	0.276	2.254	2.650	50.23	6.820	1.00720	8.071	1907	8.406	1.00390	9.647	1746
3	3.500	0.300	3.016	3.547	45.55	5.096	1.01030	6.050	2363	6.281	1.00490	7.225	2199
3 1/2	4.000	0.318	3.678	4.326	42.39	4.178	1.01380	4.972	2735	5.150	1.00750	5.935	2507
4	4.500	0.337	4.407	5.183	39.61	3.487	1.01710	4.168	3118	4.298	1.00950	4.965	2862
5	5.563	0.375	6.112	7.188	34.63	2.515	1.02600	3.032	3949	3.099	1.01650	3.604	3631
6	6.625	0.432	8.405	9.884	30.58	1.829	1.04570	2.247	4891	2.254	1.02120	2.656	4532
8	8.625	0.500	12.763	15.009	24.12	1.204	1.095	1.467	6651	1.484	1.0388	1.739	6152

Notes:

1. Current ratings listed in the Tables are based on 30°C temperature rise over 40°C ambient horizontally mounted conductors, with spacing sufficient to eliminate proximity effects, generally assumed not to be significant if spacing is 18 in. or over. Conduction of heat by supporting structures and taps can appreciably affect the ratings.
2. Conductors with a 2ft/sec crosswind. Nominal oxidized surface (e=0.50)
3. Current Ratings for direct current are close to those of alternating current for all except the larger sizes; and for them, the increase for dc bus is about 1.5 percent.
4. NEMA Standard SG1-3.02 (7/13/60) lists current rating for tubes of 57%-61% IACS conductivity, but without stated emissivity factors. However, even after adjustment for the 53% IACS conductivity of 6063-T6 alloy (and 43% for 6061-T6 alloy), the ratings differ somewhat from those of this table.

© 2011, AFL, all rights reserved. PP-3-00213, Revision 4, 3.30.2023
Specifications are subject to change without notice.

Seamless Bus Tube

Seamless bus tube is a round, hollow material manufactured to a specific outside diameter (O.D.) and wall thickness. It is produced to meet specific end user requirements. Tubing is described by the actual outside diameter and wall thickness, i.e. 8" O.D. x 0.500" Wall aluminum tubing.

Outdoor tubular bus is generally made of 6063-T6 alloy because of its excellent mechanical and electrical properties and is readily available. 6061-T6 tubular conductor is used where very high strength and lower conductivity is required.

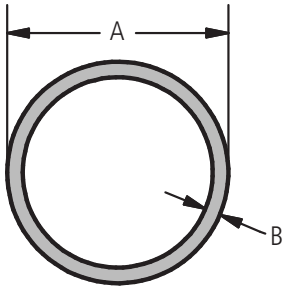

Note: For seamless bus tube sizes not listed, contact the AFL Commercial Team.

Outside Diameter of Tube	Wall Thickness	Area	Weight
in	in	sq in	lb/ft
A	B		
8	0.250	6.09	7.16
8	0.375	8.98	10.56
8	0.500	11.78	13.85
8	0.625	14.48	17.03
9	0.250	6.87	8.08
9	0.375	10.16	11.95
9	0.500	13.35	15.70
9	0.625	16.44	19.34

Outside Diameter of Tube	Wall Thickness	Area	Weight
in	in	sq in	lb/ft
A	B		
10	0.312	9.50	11.17
10	0.375	11.34	13.33
10	0.500	14.92	17.55
10	0.625	18.41	21.65
12	0.312	11.46	13.47
12	0.375	13.70	16.11
12	0.500	18.06	21.24
12	0.625	22.33	26.27

Ordering Instructions:

Step 1: Choose Outside Diameter

Outside Diameter	Diameter Code
8	8OD
9	9OD
10	10OD
12	12OD

Step 2: Choose Wall Thickness

Wall Thickness	Thickness Code
1/4"	250W
5/16"	312W
3/8"	375W
1/2"	500W
5/8"	625W

Step 3: Choose Alloy

Alloy Number	Alloy Code
6061	X
6063	Y
6101	Z

Step 4: Choose Temper

Temper	Temper Code
T6	T6
T61	T61
T63	T63

Step 5: Choose Packaging

Package Type	Package Code
Bare - Bat - Bundle (BBB)	B
EHV	E

See pictures on page 3

Step 6: Build Catalog Number

Outside Diameter	+	Wall Thickness	+	Alloy Code	+	Temper	+	Package Code

Example: To order 8 inch OD 1/2" wall 6101-T61 Alloy Bus Pipe with BBB packaging

8OD	+	500W	+	Z	+	T61	+	B

Completed Catalog Number is 8OD500WZT61B.

© 2011, AFL, all rights reserved. PP-3-00213, Revision 4, 3.30.2023
Specifications are subject to change without notice.

Physical & Electrical Properties of Large Diameter Round Tube

Amperes for 6101-T61 Alloy 57% IACS Conductivity

A	B	Area Sq In	Weight lb/ft	Moment of Inertia 1 in^4	Inductive Reactance 1 ft spacing 60 Hz-Xa microhms/ft	DC Resistance at 20°C microhms/ft	Rac/Rda at 70°C	AC Resistance at 70°C 60 Hz microhms/ft	Current Rating 60 Hz Amp	
Outside diameter in	Wall thickness in								Indoor	Outdoor
8	0.250	6.09	7.16	45.70	25.80	2.348	1.006	2.8070	3805	4720
8	0.375	8.98	10.56	65.44	26.00	1.591	1.030	1.9470	4555	5645
8	0.500	11.78	13.85	83.20	26.20	1.213	1.091	1.5730	5045	6250
8	0.625	14.48	17.03	99.20	26.50	0.987	1.206	1.4140	5190	6435
9	0.250	6.87	8.08	65.80	23.20	2.079	1.006	2.4860	4255	5245
9	0.375	10.16	11.95	94.70	23.30	1.406	1.030	1.7220	5100	6285
9	0.500	13.35	15.70	121.00	23.40	1.070	1.092	1.3890	5650	6965
9	0.625	16.44	19.34	145.00	23.60	0.869	1.308	1.2480	5980	7370
10	0.312	9.50	11.17	111.50	20.60	1.505	1.015	1.8140	5185	6355
10	0.375	11.34	13.33	131.50	20.70	1.260	1.031	1.5430	5635	6910
10	0.500	14.92	17.55	168.80	20.90	0.958	1.092	1.2430	6255	7670
10	0.625	18.41	21.65	203.10	21.00	0.776	1.210	1.1160	6640	8140
12	0.312	11.46	13.47	195.80	16.30	1.247	1.015	1.5040	6155	7480
12	0.375	13.70	16.11	231.60	16.40	1.043	1.031	1.2780	6685	8125
12	0.500	18.06	21.24	299.20	16.60	0.791	1.093	1.0280	7415	9015
12	0.625	22.33	26.27	362.30	16.70	0.640	1.213	0.9219	7850	9545

Notes:

1. Current ratings listed in the Tables are based on 30°C temperature rise over 40°C ambient horizontally mounted conductors, with spacing sufficient to eliminate proximity effects, generally assumed not to be significant if spacing is 18 in. or over. Conduction of heat by supporting structures and taps can appreciably affect the ratings.
2. Conductors with a 2ft/sec crosswind. Nominal oxidized surface (e=0.50)
3. Current Ratings for direct current are close to those of alternating current for all except the larger sizes; and for them, the increase for dc bus is about 1.5 percent.

© 2011, AFL, all rights reserved. PP-3-00213, Revision 4, 3.30.2023
Specifications are subject to change without notice.

Rectangular Bar - Sharp Corners (Standard)

Rectangular shapes are the all-purpose rigid conductor for switchgear, control apparatus and busways. The use of multiple bar bus can provide a large surface area for heat dissipation. Joints and taps are easily made by bolting or welding; it is also easy to make off-sets and 90-degree bends.

For direct current, the capacity of a rectangular bar bus conductor can be controlled by varying the size or number of bars in parallel. The same is true of alternating current up to certain limits. Special arrangements of laminations are used for high-amperage alternating current.



Thickness A	Width B	Estimated Weight per lb/ft
in	in	
1/8 0.125	0.375	0.055
1/8 0.125	0.500	0.074
1/8 0.125	0.500	0.074
1/8 0.125	0.625	0.090
1/8 0.125	0.750	0.110
1/8 0.125	0.875	0.127
1/8 0.125	1.000	0.149
1/8 0.125	1.000	0.145
1/8 0.125	1.250	0.184
1/8 0.125	2.000	0.299
1/8 0.125	2.500	0.371
1/8 0.125	4.000	0.599
3/16 0.188	0.375	0.084
3/16 0.188	0.500	0.112
3/16 0.188	0.625	0.140
3/16 0.188	0.750	0.169
3/16 0.188	0.750	0.168
3/16 0.188	0.875	0.187
3/16 0.188	1.000	0.222
3/16 0.188	2.000	0.442
1/4 0.250	0.500	0.149
1/4 0.250	0.750	0.209
1/4 0.250	1.000	0.284
1/4 0.250	1.250	0.359
1/4 0.250	1.500	0.434
1/4 0.250	2.000	0.584
1/4 0.250	2.500	0.734
1/4 0.250	3.000	0.884
1/4 0.250	3.250	0.959
1/4 0.250	4.000	1.184

Thickness A	Width B	Estimated Weight per lb/ft
in	in	
1/4 0.250	4.500	1.334
1/4 0.250	5.000	1.484
1/4 0.250	6.000	1.784
1/4 0.250	7.000	2.084
1/4 0.250	8.000	2.384
3/8 0.375	0.625	0.277
3/8 0.375	1.25	0.527
3/8 0.375	2	0.895
3/8 0.375	2	0.864
3/8 0.375	2.5	1.120
3/8 0.375	3	1.314
3/8 0.375	4	1.764
3/8 0.375	5	2.214
3/8 0.375	6	2.664
3/8 0.375	8	3.596
1/2 0.5	0.75	0.385
1/2 0.5	1.5	0.896
1/2 0.5	2	1.196
1/2 0.5	3	1.796
1/2 0.5	4	2.396
1/2 0.5	5	2.996
1/2 0.5	6	3.596
1/2 0.5	8	4.796
1/2 0.5	10	5.996
3/4 0.75	1	0.884
3/4 0.75	4	3.455
3/4 0.75	5	4.495
1	1.25	1.498
1	8	9.535
1	10	11.996
1	12	14.364

© 2011, AFL, all rights reserved. PP-3-00213, Revision 4, 3.30.2023
Specifications are subject to change without notice.

Rectangular Bar - Rounded Corners (Special Order)

Rectangular shapes are the all-purpose rigid conductor for switchgear, control apparatus and busways. The use of multiple bar bus can provide a large surface area for heat dissipation. Joints and taps are easily made by bolting or welding; it is also easy to make off-sets and 90-degree bends.

For direct current, the capacity of a rectangular bar bus conductor can be controlled by varying the size or number of bars in parallel. The same is true of alternating current up to certain limits. Special arrangements of laminations are used for high-amperage alternating current.

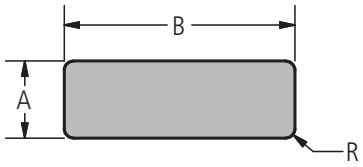

Thickness A	Width B	Radius R	Estimated Weight per lb/ft
in	in	in	
1/8 0.125	0.375	0.031	0.055
1/8 0.125	0.500	0.016	0.074
1/8 0.125	0.500	0.031	0.074
1/8 0.125	0.625	0.062	0.090
1/8 0.125	0.750	0.031	0.110
1/8 0.125	0.875	0.062	0.127
1/8 0.125	1.000	0.031	0.149
1/8 0.125	1.000	0.062	0.145
1/8 0.125	1.250	0.062	0.184
1/8 0.125	2.000	0.031	0.299
1/8 0.125	2.500	0.031	0.371
1/8 0.125	4.000	0.031	0.599
3/16 0.188	0.375	0.031	0.084
3/16 0.188	0.500	0.031	0.112
3/16 0.188	0.625	0.031	0.140
3/16 0.188	0.750	0.016	0.169
3/16 0.188	0.750	0.031	0.168
3/16 0.188	0.875	0.094	0.187
3/16 0.188	1.000	0.062	0.222
3/16 0.188	2.000	0.094	0.442
1/4 0.250	0.500	0.031	0.149
1/4 0.250	0.750	0.125	0.209
1/4 0.250	1.000	0.125	0.284
1/4 0.250	1.250	0.125	0.359
1/4 0.250	1.500	0.125	0.434
1/4 0.250	2.000	0.125	0.584
1/4 0.250	2.500	0.125	0.734
1/4 0.250	3.000	0.125	0.884
1/4 0.250	3.250	0.125	0.959
1/4 0.250	4.000	0.125	1.184

Thickness A	Width B	Radius R	Estimated Weight per lb/ft
in	in	in	
1/4 0.250	4.500	0.125	1.334
1/4 0.250	5.000	0.125	1.484
1/4 0.250	6.000	0.125	1.784
1/4 0.250	7.000	0.125	2.084
1/4 0.250	8.000	0.125	2.384
3/8 0.375	0.625	0.062	0.277
3/8 0.375	1.25	0.188	0.527
3/8 0.375	2	0.062	0.895
3/8 0.375	2	0.187	0.864
3/8 0.375	2.5	0.062	1.120
3/8 0.375	3	0.187	1.314
3/8 0.375	4	0.187	1.764
3/8 0.375	5	0.187	2.214
3/8 0.375	6	0.187	2.664
3/8 0.375	8	0.062	3.596
1/2 0.5	0.75	0.250	0.385
1/2 0.5	1.5	0.062	0.896
1/2 0.5	2	0.062	1.196
1/2 0.5	3	0.062	1.796
1/2 0.5	4	0.062	2.396
1/2 0.5	5	0.062	2.996
1/2 0.5	6	0.062	3.596
1/2 0.5	8	0.062	4.796
1/2 0.5	10	0.062	5.996
3/4 0.75	1	0.125	0.884
3/4 0.75	4	0.375	3.455
3/4 0.75	5	0.062	4.495
1	1.25	0.031	1.498
1	8	0.250	9.535
1	10	0.062	11.996
1	12	0.188	14.364

© 2011, AFL, all rights reserved. PP-3-00213, Revision 4, 3.30.2023
Specifications are subject to change without notice.

Ordering Instructions

Step 1: Width of Bar

Width of Bar	Width Code
3/8	R375
1/2	R500
5/8	R625
3/4	R750
7/8	R875
1	R1i
1 1/4	R125i
1 1/2	R15i
2	R2i
2 1/2	R25i
3	R3i
3 1/4	R325i
4	R4i
4 1/2	R45i
5	R5i
6	R6i
7	R7i
8	R8i
10	R10i
12	R12i

Step 2: Thickness of Bar

Thickness of Bar	Thickness Code
1/8	125W
3/16	188W
1/4	250W
3/8	375W
1/2	500W
3/4	750W
1	100W

Step 3: Standard Alloy

Alloy Number	Alloy Code
6101	Z

Step 4: Choose Temper

Temper	Temper Code
T6	T6
T61	T61
T63	T63

Step 5: Choose Edge Finish

Type	Radius
Square	(blank)
Rounded	R

See pictures on page 3

Step 6: Build Catalog Number

Width Code	+	Thickness Code	+	Alloy Code	+	Temper	+	Radius

Example: To order 1 1/4"wide x 1/8" wall thickness 6101-T6 Bus Bar

R125i	+	125W	+	Z	+	T6	+	R

Completed Catalog Number is R125i125WZT6R.



© 2011, AFL, all rights reserved. PP-3-00213, Revision 4, 3.30.2023
Specifications are subject to change without notice.

Current Rating of Rectangular Aluminum Bus Bar Arrangements

Amperes for 6101-T61 Alloy 57% IACS Conductivity

Sizes (Inches)	1 BAR		2 BARS		3 BARS		4 BARS	
	DC	60 HZ AC	DC	60 HZ AC	DC	60 HZ AC	DC	60 HZ AC
1/4 x 1	308	308	607	601	605	887	1203	1168
1 1/2	430	429	833	817	1235	1194	1637	1561
2	549	545	1051	1021	1552	1480	2053	1915
3	780	768	1472	1410	2162	2000	2851	2530
4	1005	980	1878	1760	2749	2462	3619	3081
5	1225	1184	2275	2092	3321	2905	4365	3625
6	1443	1381	2665	2413	3881	3338	5095	4146
7	1870	1760	3427	3034	4974	4183	6517	5152
3/8 x 2	691	678	1340	1278	1989	1831	2638	2332
3	974	941	1857	1709	2739	2384	3620	2946
4	1249	1191	2356	2099	3460	2893	4563	3574
5	1519	1429	2842	2483	4162	3387	5479	4178
6	1785	1657	3320	2847	4848	3857	6375	4765
8	2308	2098	4253	3569	6188	4774	8119	5875
10	2822	2534	5165	4289	7493	5632	9817	6941
1/2 x 3	1145	1074	2205	1991	3265	2742	4324	3297
4	1462	1369	2782	2416	4100	3264	5417	3940
5	1774	1634	3345	2828	4912	3778	6477	4580
6	2081	1892	3897	3230	5706	4284	7514	5210
8	2685	2393	4975	4014	7255	5276	9531	6246
10	3278	2880	6209	4779	8763	6256	1149	7579

Sizes (Inches)	1 BAR		2 BARS		3 BARS		4 BARS	
	DC	60 HZ AC	DC	60 HZ AC	DC	60 HZ AC	DC	60 HZ AC
1/4 x 1	300	300	585	580	775	765	905	880
1 1/2	420	415	800	785	1060	1020	1240	1180
2	535	530	1010	980	1340	1280	1560	1460
3	750	735	1380	1310	1850	1700	2180	1940
4	955	930	1720	1600	2300	2050	2740	2330
5	1160	1120	2000	1830	2670	2330	3160	2610
6	1320	1270	2220	2010	2970	2540	3440	2800
8	1620	1520	2640	2320	3410	2840	3900	3080
3/8 x 2	670	660	1230	1170	1620	1490	1920	1700
3	935	905	1680	1550	2250	1960	2730	2220
4	1190	1130	2080	1860	2800	2340	3360	2630
5	1420	1340	2420	2110	3250	2650	3850	2940
6	1630	1520	2710	2330	3680	2940	4280	3200
8	2000	1820	3240	2700	4210	3270	4820	3490
1/2 x 3	1100	1050	1870	1650	2560	2080	3070	2340
4	1390	1300	2290	1960	3150	2470	3800	2750
5	1650	1520	2680	2240	3630	2780	4370	3090
6	1890	1710	3050	2490	4060	3050	4800	3330
8	2310	2050	3640	2900	4790	3490	5510	3720

Notes:

1. Ratings based on 30°C rise over 40°C ambient in still but confined air (e=0.35), corresponding to usual indoor temperature. Vertical bar ampacity based on work by House and Tuttle. Horizontal bar ampacity from industry sources.
2. Space between bars is assumed equal bar thickness.
3. For ac phase spacings less than 18 inches an allowance for proximity effect must be made.
4. Ratings are based on horizontal mounting, in air with no attachments. For dc ratings of other alloys, multiply by: For 6101-T61, 0.982; 6101-T63, 0.992; 6101-T64, 1.02; 6101-T65, 0.996. For 60Hz, the use of these multipliers is conservative.

© 2011, AFL, all rights reserved. PP-3-00213, Revision 4, 3.30.2023
Specifications are subject to change without notice.

Integral Web (IWBC)

Bus Conductor

This shape is used for station bus, open or enclosed and for the high-current bus of outdoor substations for distribution voltages, as well as for 600-volt bus for industrial plants. AFL offers the integral web bus conductor in both ventilated and non-ventilated conditions. The use of this shape makes it unnecessary to use the spacer clamps or welded tie-bars normally needed across the channels between insulator supports. Although convection airflow is less than that of a face-to-face channel arrangement, transverse strength is greater. The shallow grooves extruded on the surface facilitate location of the centers of drilled or punched holes for attaching base plates and taps.

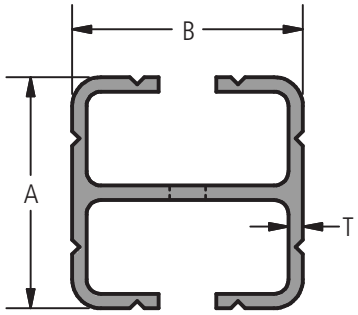

Size		Wall Thickness	Area	Weight
Height A	Width B	T	sq. in.	lb/ft
in.	in.	in.		
4	4	0.156	2.439	2.87
4	4	0.250	3.781	4.45
4	4	0.312	4.460	5.25
6	4	0.250	4.780	5.62
6	4	0.375	6.020	7.10
6	4	0.375	6.950	8.17
6	5	0.375	7.600	8.94
6	6	0.375	8.600	10.15
6	6	0.550	11.220	13.19
7	7	0.500	12.840	15.10
8	5	0.375	9.080	10.68
8	5	0.500	11.750	13.82
8	8	0.500	16.120	18.96
9	9	0.625	20.040	23.57
10	10	0.625	23.500	27.64

© 2011, AFL, all rights reserved. PP-3-00213, Revision 4, 3.30.2023
Specifications are subject to change without notice.

Physical & Electrical Properties of Integral-Web Channel Bus Conductors – 6101-T6 Alloy 55.0% IACS Conductivity (minimum)

Size		Wall Thickness	Area sq. in.	Weight lb/ft	Moment of Inertia, in.[4]		DC Resistance Rdc-20°C microhms per ft	Current Rating DC 70°C e=0.35 Indoors	Inductive Reactance Xa-60Hz 1 ft spacing microhms per ft	Rac/ RDC70°C 60HZ	AC 60 Hz Resistance Rac-70°C microhms per ft	Current Rating AC-60Hz	
A in.	B in.	T in.			I_{x-x}	I_{y-y}						Indoor e=0.35	Outdoor e= 0.50
4	4	0.156	2.439	2.87	3.876	6.213	6.88	2260	39.02	1.020	7.017	2240	2520
4	4	0.250	3.781	4.45	5.788	9.213	4.42	2810	39.76	1.035	4.579	2276	3115
4	4	0.312	4.460	5.25	6.892	10.94	3.75	3050	40.80	1.050	3.940	2980	3360
6	4	0.250	4.780	5.62	16.35	12.74	3.50	3480	34.80	1.050	3.670	3400	3780
6	4	0.375	6.020	7.10	14.50	14.00	2.78	3900	36.60	1.080	3.000	3760	4180
6	4	0.375	6.950	8.17	22.91	17.45	2.41	4200	----	1.090	2.630	4020	4470
6	5	0.375	7.600	8.94	25.19	29.78	2.20	4500	32.50	1.110	2.440	4320	4800
6	6	0.375	8.600	10.15	29.73	45.98	1.95	5020	27.60	1.110	2.160	4760	5270
6	6	0.550	11.22	13.19	40.05	60.86	1.49	5730	31.40	1.220	1.820	5190	5740
7	7	0.500	12.84	15.10	64.83	95.67	1.30	6530	27.60	1.210	1.570	5940	6540
8	5	0.375	9.080	10.68	52.88	37.59	1.84	5350	29.10	1.120	2.064	5060	5560
8	5	0.500	11.75	13.82	66.84	46.67	1.42	6090	30.00	1.280	1.820	5380	5910
8	8	0.500	16.12	18.96	103.5	152.3	1.04	7740	24.70	1.260	1.310	6890	7550
9	9	0.625	20.04	23.57	162.3	240.1	0.83	9060	21.60	1.370	1.140	7740	8450
10	10	0.625	23.50	27.64	255.6	362.4	0.71	10260	19.10	1.420	1.010	8610	9350

Notes:

1. Current ratings are based on 6101-T61 alloy with standard vent-holes in web. For 6101-T6 reduce the rating by 2 percent. Indoor ratings are based on 30°C rise over 40°C ambient in still but unconfined air, normally oxidized surface (e=0.35) and similarly for outdoor ratings, except 2 ft/sec cross wind (e=0.50). Horizontal mounting is assumed with spacing sufficient to eliminate proximity effects, generally assumed to be 18-in. or over. For temperature rise of 50°C above 40°C ambient, the indoor ratings for 30°C may be increased about 30 percent. Indoor ratings (D-C and A-C) calculated by computer and verified by test rounded. Outdoor ratings are calculations only.
2. For vent and notch arrangements, consult your AFL Sales Representative. The interior perimeter varies according to the washer diameters that are to be accommodated, and as to their location per NEMA spacing. The 12 in. x 12 in. size is a opposite of two symmetric extrusions bolted together.

Ordering Instructions:

Step 1: Choose Size of IWBC

Size of IWBC	Size Code
4" x 4"	I44
6" x 4"	I64
6" x 5"	I65
6" x 6"	I66
7" x 7"	I77
8" x 5"	I85
8" x 8"	I88
9" x 9"	I99
10" x 10"	I101

Step 2: Choose Wall Thickness

Wall Thickness	Thickness Code
5/32	156W
1/4	250W
5/16	312W
3/8	375W
0.550	550W
1/2	500W

Step 3: Standard Alloy

Alloy Number	Alloy Code
6101	Z

Step 4: Choose Temper

Temper	Temper Code
T6	T6
T61	T61
T63	T63

Step 5: Choose Piece Length
Piece Length is a whole number between 10 feet and 40 feet.

Step 6: Build Catalog Number

Size Code	+	Thickness Code	+	Alloy Code	+	Temper	+	Vented

Example: To order 8" x 8" IWBC with 1/2" wall thickness 6101 T-6 Alloy

I88	+	500W	+	Z	+	T6	+	V

Completed Catalog Number is I88500WZT6V.

Example: To order 4" x 4" IWBC with 1/4" wall thickness 6063 T-6 Alloy Non-vented

I44	+	250W	+	Y	+	T6	+	

Completed Catalog Number is I44250WYT6

© 2011, AFL, all rights reserved. PP-3-00213, Revision 4, 3.30.2023
Specifications are subject to change without notice.

Universal Angle Bus Conductor (UABC)

The universal angle bus conductor is used for moderate-size outdoor substations at distribution voltages. Centerline grooves make it easy to locate bolt holes. The bus can be mounted directly on insulator caps, since both legs are of uniform thickness. In contrast to the large number of fittings sometimes required for bus installation, angle can be easily installed using bolts. Terminal connectors are used to make taps or flexible connections. Angle shapes are usually made of 6101-T6 alloy.

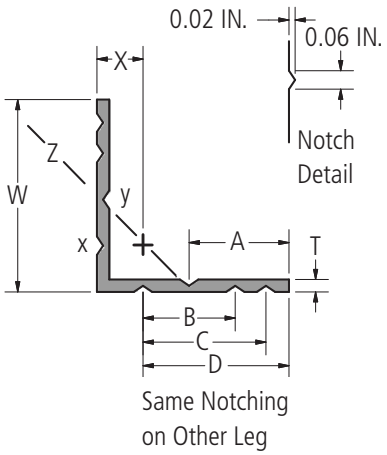

Standard - Non-Vented

Size W	Size T	Notching Dimensions				Area sq. in.	Weight lb/ft
in.	in.	A	B	C	D		lb/ft
3 1/4	1/4	1.500	1.750	---	2.375	1.57	1.83
4	1/4	1.875	1.750	2.00	2.813	1.93	2.27
4	3/8	1.875	1.750	2.00	2.813	2.85	3.36
4 1/2	3/8	2.187	1.750	2.00	3.006	3.23	3.80
5	3/8	2.313	1.750	2.00	3.256	3.60	4.24

Ordering Instructions:

Step 1: Choose Size

Size of UABC	Size Code
3 1/4"	A325
4"	A400
4 1/2"	A450
5"	A500

Step 2: Choose Wall Thickness

Wall Thickness	Thickness Code
1/4	250W
3/8	375W

Step 3: Standard Alloy

Alloy Number	Alloy Code
6101	Z

Step 4: Choose Temper

Temper	Temper Code
T6	T6
T61	T61
T63	T63

Step 5: Build Catalog Number

Size Code	+	Thickness Code	+	Alloy Code	+	Temper

Example: To order 5" 3/8" Wall Thickness 6106-T6 Alloy UABC

A500	+	375W	+	Z	+	T6

Completed Catalog Number is A500375WZT6.

© 2011, AFL, all rights reserved. PP-3-00213, Revision 4, 3.30.2023
Specifications are subject to change without notice.

Physical & Electrical Properties of Uniform-Thickness Angle Bus Conductors – 6101-T6 alloy 55.0% IACS Conductivity (minimum) (4)

Size (3)		Area sq. in.	Weight lb/ft	Moment of Inertia in.^{4}		Minimum Distance to Neutral Axis		Xa - 60 Hz Inductive Reactance 1-ft Spacing microhms/ft	DC Resistance at 20°C microhms/ft	Rac/Rdc at 70°C 60 Hz	AC Resistance at 70°C 60Hz microhms/ft	AC Current Rating 60 Hz Amp (1)	
W in.	T in.			Ix or y	Iz	x or y	z					Indoor e=0.35	Outdoor e=0.50
3 1/4	1/4	1.57	1.83	1.60	0.65	0.91	1.30	51.41	11.20	1.024	11.49	1300	1902
4	1/4	1.93	2.27	3.02	1.18	1.09	1.51	46.60	9.07	1.045	9.46	1550	2236
4	3/8	2.85	3.36	4.35	1.75	1.14	1.60	46.62	6.14	1.115	6.85	1850	2654
4 1/2	3/8	3.23	3.80	6.31	2.61	1.26	1.77	43.93	5.42	1.145	6.20	2050	2885
5	3/8	3.60	4.24	8.75	3.50	1.39	1.96	41.52	4.86	1.175	5.71	2250	3130

Notes:

1. Indoor current ratings are based on 30°C rise over 40°C ambient in still but unconfined air, normally oxidized surface (e=0.35). Outdoor ratings are based similarly, but with 2 ft/sec crosswind (e=0.50). Horizontal mounting is assumed with spacing sufficient to eliminate proximity effects, generally assumed to be 18-in. or over. Indoor ratings based on work by House and Tuttle. Outdoor ratings from IEEE paper by Prager, Pemberton, Craig and Bleshman.
2. Back-to-back angles are to be considered as separate members; not as a composite.
3. Alignment grooves are extruded to facilitate centering of holes according to NEMA standard spacings.
4. A modification of this design has a lug at top that does not interfere with bolting, yet it strengthens the shape against tendency to roll-over to the z-z axis in long spans subjected to large lateral short circuit forces. For equal weight of shape, the z-z radius of gyration is increased by 20 percent. The stress that causes roll-over is thereby increased about 40 percent.

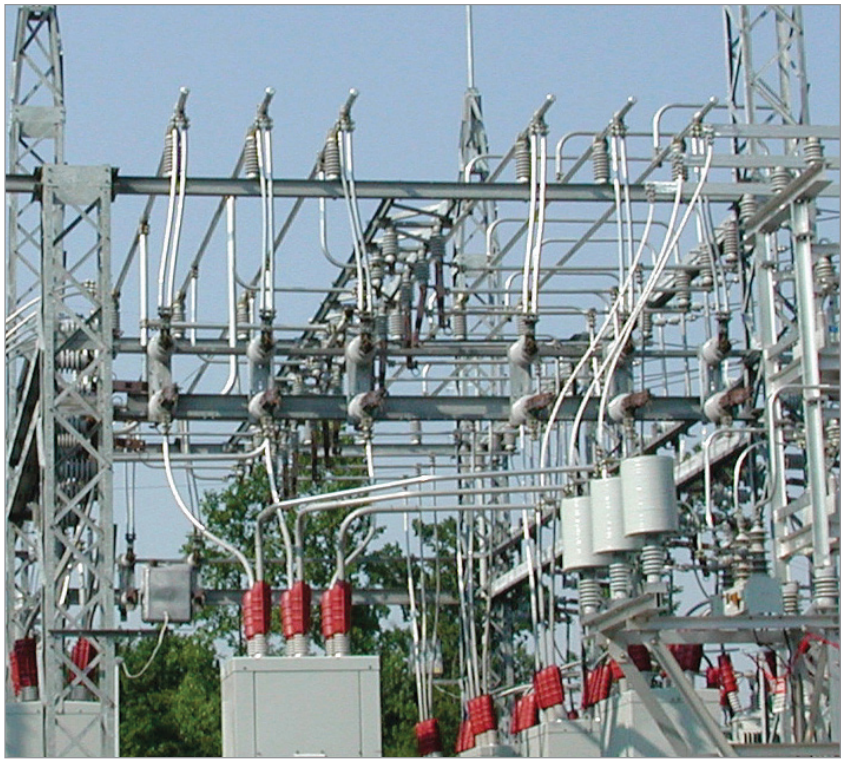

© 2011, AFL, all rights reserved. PP-3-00213, Revision 4, 3.30.2023
Specifications are subject to change without notice.

Mechanical Properties of Aluminum Bus Conductors

The Table below shows the mechanical properties of the aluminum alloys and tempers generally used for bus conductor. From this information, the best combination of properties can be selected for a particular application. For example, where the cost of power is important, high electrical conductivity is a key factor. In outdoor applications, mechanical properties are a prime consideration. Other factors, such as yield strength and tensile strength may are taken into consideration.

Mechanical Properties of Aluminum Bus Conductor & Related Alloys

Product	Alloy and Temper	Thickness in.	Tensile Strength (ksi) at 20°C (68oF)		Typical Ultimate (b)	Typical Yield (b)	Typical (a) Elongation (Percent - in 2 in. or 4 Dia.)
			Minimum Ultimate (b)	Minimum Yield (b)			
Extruded rod, bar tube, pipe	6101-T6	0.125-0.500	29.0	25.0	32.0	28.0	15.0
	6101-T61	0.125-0.749	20.0	15.0			
		0.750-1.499	18.0	11.0			
		1.500-2.000	15.0	8.0			
	6101-T63	0.125-0.500	27.0	22.0			
	6101-T64	0.125-1.000	15.0	8.0			
	6101-T65	0.125-0.749	25.0	20.0			
Extruded Pipe (c)	6061-T6	Pipe size 1.0 and over	38.0	35.0	45.0	40.0	10.0 min
	6063-T6	Pipe size, all	30.0	25.0	35.0	31.0	8.0 min

(a) Elongation values apply to specimens of sizes related to product uses.
(b) Values apply to ANSI net stress area of regular or semi-finished bolts.
(c) Values apply to ASTM B241 seamless pipe.

© 2011, AFL, all rights reserved. PP-3-00213, Revision 4, 3.30.2023
Specifications are subject to change without notice.

Bending and Forming Bus Conductor

Aluminum bus conductors can be formed by the same procedures and practices that are used for other metals. The most important factors governing to consider when bending bus conductor are:

1. The ductility of the conductor
2. The size and shape of the conductor
3. The method of bending
4. The bending equipment used

A metal must be ductile enough to allow stretching and compression to take place. Elongation alone is not a complete criterion for ductility. The ration of yield strength to tensile strength must also be taken into account. A combination of a high elongation value and a low ratio of yield strength to tensile strength provides the most satisfactory ductility.

The size and the shape of the bus conductor is another factor that must be taken into consideration. For example, in case of a tube, the sharpness of a bend depends not only on the diameter of the tube, but also on the ratio of wall thickness to the diameter. When making edgewise bends of rectangular bar, tests have shown that the radius (in terms of width of the bar) around which a bar can be bent satisfactorily depends not only on the ductility of the car but also on its ratio of width to thickness.

Extruded, rolled, and sawed-plated bus bars can be bent flatwise at room temperature through an angle of 90 degrees to minimum inside radii.

Tubular conductors made alloys 6063-T6 and 6061-T6 are often bent to form turns and offsets In these cases, specifications should require seamless pipe made by holow ingot process (ASTM B241). Ideally, the ratio of tensile yield to tensile ultimate should not exceed 0.85. It is vital to specify that severe forming will be encountered and optimum heat treatments are required.

For substations, inside radii of five to seven times the nominal pipe size for ASA schedules 40 and 80 pipe of 6063-T6 and 6061-T6 alloys should produce satisfactory results with conventional bending tools.

Flatwise Bends for Rectangular Bus

Type of Bar	Alloy and Temper	Thickness in.	Radius min.[1]
Extruded	6101-T6	0.125-0.375	2 x thickness
Extruded	6101-T6	0.376-0.500	2 1/2 x thickness
Extruded	6101-T61	0.125-0.500	1 x thickness
Extruded	6101-T61	0.501-0.749	2 x thickness
Extruded	6101-T61	0.750-1.000	3 x thickness
Extruded	6101-T61	1.001-1.625	4 x thickness
Extruded	6101-T63	0.125-0.375	1 x thickness
Extruded	6101-T63	0.376-0.500	1 1/2 x thickness
Extruded	6101-T63	0.501-1.000	2 1/2 x thickness
Extruded	6101-T64	0.125-0.750	1 x thickness
Extruded	6101-T64	0.751-1.00	2 1/2 x thickness
Extruded	6101-T65	0.125-0.500	1 x thickness
Extruded	6101-T65	0.501-0.749	2 x thickness

1. Applicable to widths up through 6 inches in the T6, T61, T63 and T65 tempers and to widths up through 12 inches for all other listed tempers. Blend radii for greater widths are subject to inquiry.



© 2011, AFL, all rights reserved. PP-3-00213, Revision 4, 3.30.2023
Specifications are subject to change without notice.

Deflection Values of Schedule 40 Aluminum Pipe

Conditions	Nominal Pipe Size - in.	10	15	20	25	30	35	40	45	50
Bare	1	0.15	0.76	2.39						
	1 1/4	0.09	0.46	1.45	3.55					
	1 1/2	0.07	0.35	1.09	2.67					
	2	0.04	0.21	0.68	1.65	3.46				
	2 1/2	0.03	0.15	0.47	1.15	2.38	4.22			
	3	0.02	0.10	0.31	0.76	1.58	2.93	5.00		
	3 1/2	0.02	0.08	0.24	0.58	1.20	2.21	3.78	6.07	
	4	0.01	0.06	0.19	0.45	0.94	1.74	2.96	4.76	7.26
	5	0.01	0.04	0.12	0.29	0.61	1.12	1.91	3.08	4.69
	6	0.01	0.03	0.08	0.20	0.42	0.79	1.34	2.15	3.28
1/2 in. ice	1	0.43	2.20	6.96						
	1 1/4	0.24	1.23	3.89	9.62					
	1 1/2	0.17	0.88	2.80	6.83					
	2	0.10	0.52	1.63	4.00	8.36				
	2 1/2	0.06	0.30	0.96	2.30	4.89	9.05			
	3	0.04	0.19	0.60	1.47	3.06	5.72	9.75		
	3 1/2	0.03	0.14	0.44	1.08	2.24	4.16	7.16	11.46	
	4	0.02	0.11	0.34	0.83	1.71	3.17	5.42	8.73	13.31
	5	0.01	0.07	0.21	0.51	1.05	1.95	3.34	5.37	8.19
	6	0.01	0.04	0.14	0.34	0.71	1.32	2.25	3.60	5.49
1/2 in. ice 4 lb Wind Plus Constant	1	0.56	2.85	9.02						
	1 1/4	0.30	1.53	4.84	11.81					
	1 1/2	0.21	1.08	3.40	8.30					
	2	0.12	0.61	1.93	4.70	9.75				
	2 1/2	0.07	0.34	1.09	2.65	5.49	10.17			
	3	0.04	0.21	0.67	1.64	3.40	6.30	10.76		
	3 1/2	0.03	0.15	0.49	1.19	2.47	4.58	7.81	12.51	
	4	0.02	0.12	0.37	0.90	1.86	3.45	5.89	9.43	14.38
	5	0.01	0.07	0.22	0.55	1.13	2.10	3.57	5.72	8.72
	6	0.01	0.05	0.15	0.36	0.75	1.39	2.37	3.80	5.79
1 in. ice	1	0.88	4.44	14.03						
	1 1/4	0.47	2.37	7.47	18.49					
	1 1/2	0.34	1.69	5.35	13.07					
	2	0.18	0.92	2.91	7.09	14.95				
	2 1/2	0.10	0.50	1.59	3.87	8.03	15.06			
	3	0.06	0.31	0.97	2.37	4.91	9.20	15.69		
	3 1/2	0.04	0.22	0.70	1.70	3.53	6.53	11.14	18.06	
	4	0.03	0.16	0.52	1.27	2.63	4.88	8.32	13.49	20.56
	5	0.02	0.10	0.31	0.76	1.57	2.91	4.97	8.05	11.74
	6	0.01	0.06	0.21	0.50	1.04	1.92	3.28	5.26	8.02

Notes:

1. These are maximum deflection values in inches for a simple beam with uniformly distributed load. For beams fixed at both ends, the deflection will be one-fifth of the values given.
2. Deflection d1 for any other span L1 may be obtained from the relation: $d1 = d\ L1^4/L^4$

© 2011, AFL, all rights reserved. PP-3-00213, Revision 4, 3.30.2023
Specifications are subject to change without notice.

Deflection Values of Schedule 80 Aluminum Pipe

Conditions	Nominal Pipe Size - In.	10	15	20	25	30	35	40	45	50
Bare	1	0.16	0.81	2.56						
	1 1/4	0.10	0.49	1.54	3.77					
	1 1/2	0.07	0.36	1.15	2.82					
	2	0.04	0.23	0.72	1.76	3.65	6.76			
	2 1/2	0.03	0.16	0.49	1.21	2.50	4.64	7.92		
	3	0.02	0.10	0.33	0.80	1.66	3.08	5.25	8.40	
	3 1/2	0.01	0.08	0.25	0.60	1.25	2.32	3.97	6.36	9.69
	4	0.01	0.06	0.19	0.47	0.98	1.82	3.11	4.98	7.58
	5	0.01	0.04	0.12	0.31	0.63	1.17	2.01	3.21	4.89
	6	0.01	0.03	0.09	0.21	0.44	0.82	1.40	2.25	3.43
1/2 in. ice	1	0.40	2.01	6.34						
	1 1/4	0.22	1.11	3.51	8.65					
	1 1/2	0.16	0.79	2.51	6.12					
	2	0.09	0.46	1.45	3.54	7.40	13.72			
	2 1/2	0.05	0.28	0.88	2.15	4.46	8.33	14.20		
	3	0.03	0.17	0.55	1.35	2.80	5.23	8.93	14.30	
	3 1/2	0.02	0.13	0.40	0.99	2.05	3.80	6.50	10.47	15.96
	4	0.02	0.10	0.31	0.75	1.56	2.89	4.95	7.96	12.14
	5	0.01	0.06	0.20	0.49	1.01	1.88	3.20	5.13	7.81
	6	0.01	0.04	0.13	0.32	0.67	1.24	2.11	3.38	5.15
1/2 in. ice 4 lb Wind Plus Constant	1	0.50	2.53	7.99						
	1 1/4	0.27	1.34	4.24	10.36					
	1 1/2	0.94	2.97	7.24						
	2	0.10	0.53	1.66	4.06	8.42	15.60			
	2 1/2	0.06	0.31	0.98	2.39	4.95	9.17	15.65		
	3	0.04	0.19	0.60	1.47	3.06	5.66			
	3 1/2	0.03	0.14	0.44	1.07	2.21	4.10	7.00	11.21	17.08
	4	0.02	0.10	0.33	0.81	1.67	3.09	5.28	8.45	12.88
	5	0.01	0.06	0.20	0.49	1.01	1.88	3.20	5.13	7.81
	6	0.01	0.04	0.13	0.32	0.67	1.24	2.11	3.38	5.15
1 in. ice	1	0.76	3.86	12.21						
	1 1/4	0.40	2.02	6.39	15.80					
	1 1/2	0.28	1.40	4.42	10.79					
	2	0.15	0.77	2.43	5.94	12.46	23.09			
	2 1/2	0.09	0.44	1.38	3.37	6.99	13.10	22.34		
	3	0.05	0.26	0.84	2.04	4.24	7.93	13.53	21.67	
	3 1/2	0.04	0.19	0.60	1.46	3.03	5.61	9.60	15.52	23.65
	4	0.03	0.14	0.45	1.09	2.26	4.19	7.16	11.54	17.59
	5	0.02	0.08	0.26	0.65	1.34	2.48	4.25	6.85	10.44
	6	0.01	0.05	0.17	0.42	0.87	1.61	2.75	4.41	6.72

Notes:

1. These are maximum deflection values in inches for a simple beam with uniformly distributed load. For beams fixed at both ends, the deflection will be one-fifth of the values given.
2. Deflection d1 for any other span L1 may be obtained from the relation: $d1=d\ L1^4/L^4$

© 2011, AFL, all rights reserved. PP-3-00213, Revision 4, 3.30.2023
Specifications are subject to change without notice.

Welding Aluminum Bus to Aluminum Connectors



Welding of aluminum in electrical construction offers a superior and economical means of joining conductors. Electric arc welding using an inert gas shield produces mechanically and electrically sound joints requiring no flux or special surface preparation other than the cleaning of the surface to be welded.

A welded connection that is mechanically satisfactory is also electrically satisfactory. With welded connections, there is an essentially homogeneous union that gives a permanent stable connection. It is not necessary to try to produce a connection with the same resistance as bus itself in order to have a stable permanent joint.

There are bus connectors where it is important to insure a resistance ratio of unity with the conductor itself. Small differences in resistance can affect the current distribution in some bus systems. Some bus systems require equalization bars. Welded connections are an ideal solution to both problems. Such connections can be made by following procedures outlined in The American Welding Society Handbook "Welding Aluminum."

© 2011, AFL, all rights reserved. PP-3-00213, Revision 4, 3.30.2023
Specifications are subject to change without notice.

General Welding Specifications for Tubular Aluminum Bus Conductor

The following items cover key points that should be included in specifications for welding aluminum bus conductors. It is recommended that the references be reviewed in the preparation of proprietary welding specifications.

1. The welding process and all welding operators should be qualified in accordance with the Aluminum Association, "Aluminum Construction Manual" Section 7.2.4 "Qualification of Welding Procedure and Welding."
2. All Joints to be welded should be free of moisture and hydrocarbon. Moisture can be removed thermally, but the temperature applied should not exceed 250°F (121°C). Degreasing should be done with a non-toxic solvent so as to leave a minimum of residual on the parts. Sufficient time must be allowed for evaporation of the solvent prior to welding. Wire brushing with a stainless steel wire brush should be employed after solvent cleaning to remove thick heat-treat oxide films, water stains, etc., to permit optimum fusion and soundness of the weld.
3. All welds should be made by the gas metal-arc (MIG) or the gas tungsten-arc (TIG) welding process. Reversed polarity direct current should be used for MIG welding, whereas alternating current should be used for TIG welding. The shielding gas should be welding grade Argon, Helium, or a mixture of the two. Filler alloy 4043 should be used.
4. The working area should be substantially draft free and should be protected from atmospheric contamination.
5. All connections should be checked before, during and after the weld is made. Before the weld is begun, visually inspect the connection to determine proper edge preparation and alignment. During the weld, maintain a smooth and continuous flow of metal into the joint and maintain a constant current setting on the welding station. When several passes are to be made, check the previous pass before laying down the next one to enable detection of poor fusion or cracks. Defective areas should be removed with a dry chisel prior to application of subsequent weld passes. After the weld has been complete, it should be visually inspected again for quality and to insure the weld bead is of the correct size. The cross sectional area of the weld should not be less than that of the smallest member being joined.
6. Members being joined should be tack welded in place to prevent misalignment during the welding process.

© 2011, AFL, all rights reserved. PP-3-00213, Revision 4, 3.30.2023
Specifications are subject to change without notice.

© 2011, AFL, all rights reserved. PP-3-00213, Revision 4, 3.30.2023
Specifications are subject to change without notice.

Table of Contents

Bus Dampers

Bus Dampers Table of Contents 669
Bus Vibration. 671
Universal Angle Bus Conductor (UABC) 672
Integral Web Bus Conductor (IWBC). 672
Damper Spacing—Rigid Bus 673
Recommended Sizes of ACSR to be Inserted in Tubular Bus
to Prevent Vibration 674
Type 1706 Series Bus Vibration Dampers 675
Bus Vibration Dampers—Tube. 677
External Bus Vibration Damper for Tubular Bus. 678
Bus Vibration Test Data 679

© 2011, AFL, all rights reserved. PP-3-00259, Revision 6, 3.29.2023
Specifications are subject to change without notice.

© 2011, AFL, all rights reserved. PP-3-00259, Revision 6, 3.29.2023
Specifications are subject to change without notice.

Bus Vibration

Bus vibration is caused by a low steady wind blowing across the bus at approximately right angles to the span. Under certain low velocity wind conditions, eddies will break off alternately from the top and bottom surfaces causing the bus to vibrate in a vertical plane. The bus will vibrate at its natural frequency provided that this frequency is within the range that can be excited by the wind. All shapes of bus will vibrate provided the following conditions are present: 1) suitable winds are present, 2) span lengths are long enough to vibrate and 3) support losses are less than input by wind.

Winds causing vibration are low steady winds under 15 mph; winds over 15 mph are generally too gusty to induce vibration. A span that is "sheltered" from the wind not be as prone to vibrate as an exposed span. This shelter can be caused by trees around the station, equipment in the station or by the location of the station such as being in a valley.

Long spans are more prone to vibrate than short spans. In fact, a long span can have one, two or three (in the case of extremely long spans). A loop of vibration is the portion of a vibrating body between two node points. The "node" being the point of a vibrating body that is free of vibration (a support would be a node point). Size of the bus tube increases span length that will be free of vibration, however, whether a bus tube is Schedule 40 or Schedule 80 has relatively little effect with respect to determining if a span will vibrate or not. See tables "Maximum Vibration-Free Span Lengths" for maximum bus length that will require no vibration protection.

The support losses are an indeterminable factor which depends on support type, insulator type, structure flexibility and other related factors. In some substations the losses are high enough to provide adequate damping but in other stations the support losses are less and the bus vibrates.

In general, we can only say that a span greater than some minimum length can vibrate, not that it will vibrate (see table "Maximum Vibration-Free Span Lengths"). There are too many variables involved to definitely state that a given span will vibrate. However, due to the fact of its length it has the potential to vibrate.

Bus vibration protection in the past has been by the method of inserting "scrap" conductor in the bus but in recent years the use of bus dampers has found increasing use of vibration protection. When the specific size of conductor is not used by a utility and has to be ordered, it is no longer "scrap" and becomes costly, particularly in the short lengths required for damping purposes. When the cost of installation is added to the purchase cost, the total cost of inserted cable becomes expensive. For this reason, the use of dampers is increasing. Dampers also have the advantage of being able to be installed in an existing station where vibration problems have occurred.

The following tables are supplied for bus vibration references:

1. Maximum vibration - free span length – Tubular Bus
2. Maximum vibration - free span length – UABC
3. Maximum vibration – free span length – IWCB
4. Damper spacing – Rigid Bus
5. Recommended sizes of ACSR to be inserted in Tubular Bus to prevent vibration

© 2011, AFL, all rights reserved. PP-3-00259, Revision 6, 3.29.2023
Specifications are subject to change without notice.

Nominal Pipe Size	Maximum Safe Span Length
1	5′ - 0″
1-1/4	6′ - 3″
1-1/2	7′ - 0″
2	9′- 0″
2-1/2	10′- 9″
3	13′ -3″
3-1/2	15′- 3″
4	17′-0″
4-1/2	19′-0″
5	21′-3″
6	25′-3″

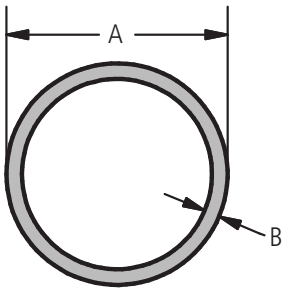

Notes:
1. Lengths based on loop of vibration
2. Lengths apply to both Schedule 40 and Schedule 80 tubular bus.
3. Lengths can be increased approximately 20% with reasonable certainty that there will be no vibration.

Universal Angle Bus Conductor (UABC)

UABC Size	Maximum Safe Span Length
3 -14 x 3 -1/4 x 1/4	12′- 0″
4 x 4 x 1/4	15′- 0″
4 x 4 x 3/8	14′- 9″
4 - ½ x 4 - 1/2 x 3/8	16′ - 9″
5 x 5 x 3/8	18′ - 6″

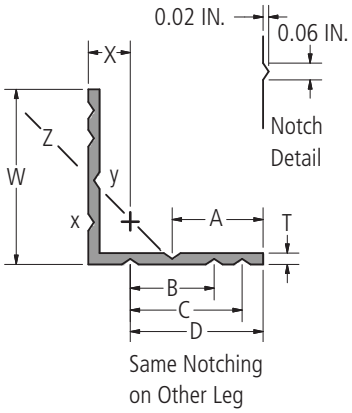

Notes:
1. Lengths based on one loop of vibration
2. Lengths can be increased approximately 20% with reasonable certainty that will be no vibration.
3. Does not apply for double angles in back-to-back configurations

Integral Web Bus Conductor (IWBC)

UABC Size	Maximum Safe Span Length
3 -14 x 3 -1/4 x 1/4	12′- 0″
4 x 4 x 1/4	15′- 0″
4 x 4 x 3/8	14′- 9″
4 - ½ x 4 - 1/2 x 3/8	16′ - 9″
5 x 5 x 3/8	18′ - 6″

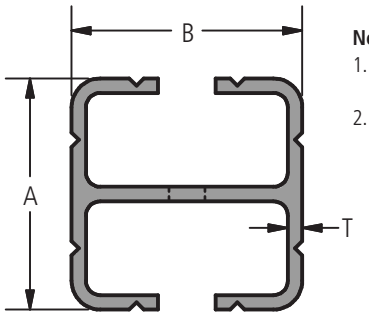

Notes:
1. Lengths based on one loop of vibration
2. Lengths can be increased approximately 20% with reasonable certainty that will be no vibration.

© 2011, AFL, all rights reserved. PP-3-00259, Revision 6, 3.29.2023
Specifications are subject to change without notice.

Damper Spacing—Rigid Bus

SPAN	SPACING	SPAN	SPACING	SPAN	SPACING	SPAN	SPACING
15′ - 0	7′ - 0	26′ - 6	10′ - 10	38′ - 0	14′ - 8	49′ - 6	18′ - 6
15′ - 6	7′ - 2	27′ - 0	11′ - 0	38′ - 6	14′ - 10	50′ - 0	18′ - 8
16′ - 0	7′ - 4	27′ - 6	11′ - 2	39′ - 0	15′ - 0	50′ - 6	18′ - 10
16′ - 6	7′ - 6	28′ - 0	11′ - 4	39′ - 6	15′ - 2	51′ - 0	19′ - 0
17′ - 0	7′ - 8	28′ - 6	11′ - 6	40′ - 0	15′ - 4	51′ - 6	19′ - 2
17′ - 6	7′ - 10	29′ - 0	11′ - 8	40′ - 6	15′ - 6	52′ - 0	19′ - 4
18′ - 0	8′ - 0	29′ - 6	11′ - 10	41′ - 0	15′ - 8	52′ - 6	19′ - 6
18′ - 6	8′ - 2	30′ - 0	12′ - 0	41′ - 6	15′ - 10	53′ - 0	19′ - 8
19′ - 0	8′ - 4	30′ - 6	12′ - 2	42′ - 0	16′ - 0	53′ - 6	19′ - 10
19′ - 6	8 ′ - 6	31′ - 0	12′ - 4	42′ - 6	16′ - 2	54′ - 0	20′ - 0
20′ - 0	8′ - 8	31′ - 6	12′ - 6	43′ - 0	16′ - 4	54′ - 6	20′ - 2
20′ - 6	8′ -10	32′ - 0	12′ - 8	43′ - 6	16′ - 6	55′ - 0	20′ - 4
21′ - 0	9′ - 0	32′ - 6	12′ - 10	44′ - 0	16′ - 8	55′ - 6	20′ - 6
21′ - 6	9′ - 2	33′ - 0	13′ - 0	44′ - 6	16′ - 10	56′ - 0	20′ - 8
22′ - 0	9′ - 4	33′ - 6	13′ - 2	45′ - 0	17′ - 0	56′ - 6	20′ - 10
22′ - 6	9′ - 6	34′ - 0	13′ - 4	45′ - 6	17′ - 2	57′ - 0	21′ - 0
23′ - 0	9′ - 8	34′ - 6	13′ - 6	46′ - 0	17′ - 4	57′ - 6	21′ - 2
23′ - 6	9′ - 10	35′ - 0	13′ - 8	46′ - 6	17′ - 6	58′ - 0	21′ - 4
24′ - 0	10′ - 0	35′ - 6	13′ - 10	47′ - 0	17′ - 8	58′ - 6	21′ - 6
24′ - 6	10′ -2	36′ - 0	14′ - 0	47′ - 6	17′ - 10	59′ - 0	21′ - 8
25′ - 0	10′ - 4	36′ - 6	14′ - 2	48′ - 0	18′ - 0	59′ - 6	21′ - 10
25′ - 6	10′ - 6	37′ - 0	14′ - 4	48′ - 6	18′ - 2	60′ - 0	22′ - 0
26′ - 0	10′ - 8	37′ - 6	14′ - 6	49′ - 0	18′ - 4	–	–

Notes:
1. Spacing based on 1/3 span length plus two feet
2. Damper may be located at either end of the span

© 2011, AFL, all rights reserved. PP-3-00259, Revision 6, 3.29.2023
Specifications are subject to change without notice.

Recommended Sizes of ACSR to be Inserted in Tubular Bus to Prevent Vibration

Nominal Bus Size in	Recommended Min. Size of ACSR cm
2	266,800
2 - 1/2	266,800
3	266,800
3 - 1/2	397,500
4	795,000
5	1,431,000
6	1,590,000

Notes:
1. ACSR should have a multi-strand core
2. Based on no energy absorption by supports

© 2011, AFL, all rights reserved. PP-3-00259, Revision 6, 3.29.2023
Specifications are subject to change without notice.

DOSSERT®

TYPE 1706 SERIES

Bus Vibration Dampers



Tubular bus dampers are designed to control Aeolian or wind-induced vibration in long bus spans; the dampers have been proven both in the laboratory and in field service to be the most effective method of controlling tubular bus vibration. The dampers are faster and easier to install than the old method of inserting "scrap" cable into the tubular bus runs. Also, the dampers find applications for correcting a vibration problems in existing substations.

Determine catalog number based on the bus conductor size being used. To order a bus vibration damper for 2 1/2" bus conductor, the complete catalog number is 1706-288.

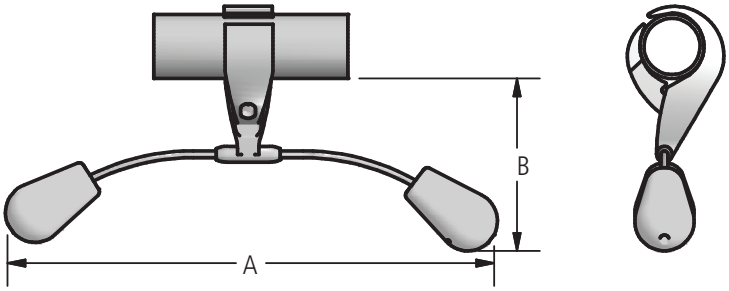

FIG. 1

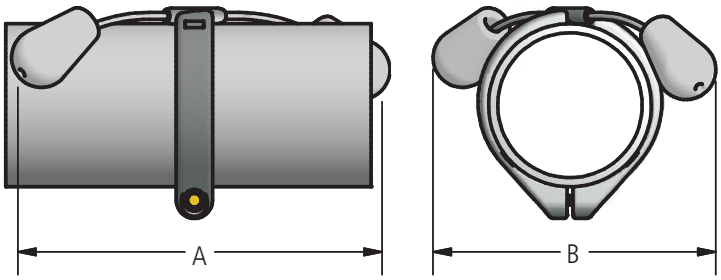

FIG. 2

Ordering Information

CATALOG NUMBER	SPS	FIG. NO.	DIMENSIONS IN INCHES		
			A	B	BOLT SIZE
1706-190	1-1/2	1	29.5	9.9	5/8-11
1706-238	2	1	29.5	9.9	5/8-11
1706-288	2-1/2	1	29.6	10.2	5/8-11
1706-350	3	1	29.6	10.3	3/4-10
1706-008	3	2	28.0	12.6	1/2-13
1706-009	3-1/2	2	27.8	13.2	1/2-13
1706-010	4	2	27.6	13.6	1/2-13
1706-012	5	2	26.8	15.4	1/2-13
1706-013	6	2	26.2	17.8	1/2-13
1706-014	8 O.D.	2	24.8	18.6	1/2-13

© 2011, AFL, all rights reserved. PP-3-00259, Revision 6, 3.29.2023
Specifications are subject to change without notice.

DOSSERT®

TYPE 1706

Bus Vibration Dampers

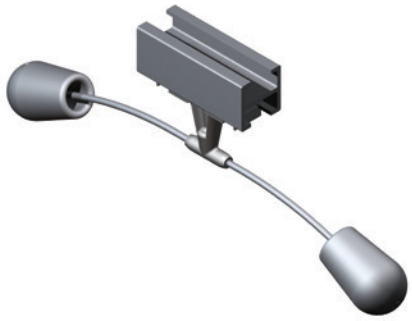

Vibration dampers for universal angle bus conductor (UABC) and integral web channel bus conductor (IWCB) are specifically designed to control Aeolian or wind-induced vibration in long bus spans. The dampers provide a fast, economical method of damping vibration. Installation is easy; the IWCB damper clamps to the bus by means of a bolt and clamp nut while the UABC damper bolts directly to the bus.

Determine catalog number based on the bus conductor size being used. Ex: A bus vibration damper for 4"x4" IWCB, the complete catalog number is: 1706-129.

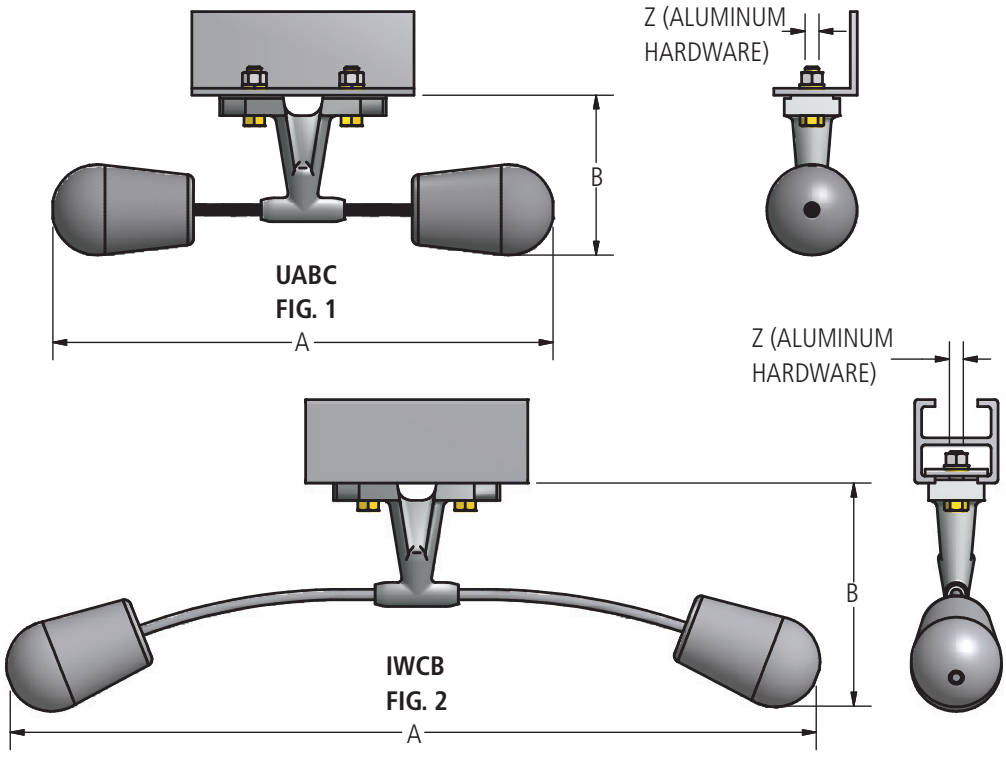

Ordering Information

CONDUCTOR SIZE IN	FIG. NO.	CATALOG NUMBER	DIMENSIONS IN INCHES		
			A	B	BOLT SIZE
3-1/4 x 3-1/4 Thru 5 x 5 UABC	1	1706-123	15.5	5.7	1/2-13
4 x 4 Thru 9 x 9 IWCB	2	1706-129	29	10.1	1/2-13

© 2011, AFL, all rights reserved. PP-3-00259, Revision 6, 3.29.2023
Specifications are subject to change without notice.

Bus Vibration Dampers—Tube
Internal, Welded 345 kV, 500 kV and 765 kV

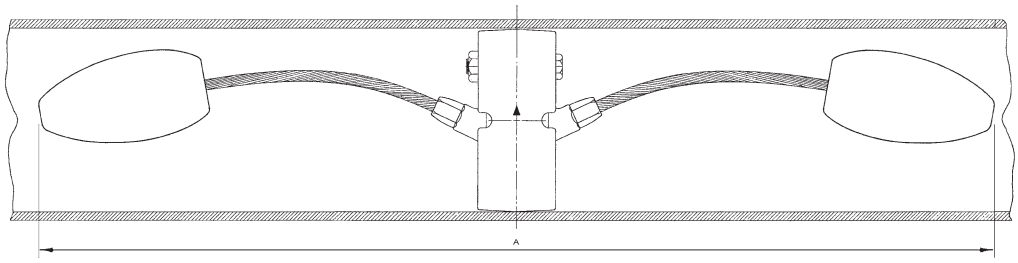

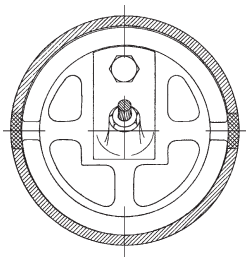

Internal damper is designed to be corona-free up to 765 kV service. Damper is designed to be welded inside bus, to be corona-free, and to present a "clean" appearance to the substation.

Conductor Size	Catalog Number	Dimensions A		Nominal Weight Aluminum		Nominal Weight Total	
		in	mm	lb	kg	lb	kg
5" SPS	1705-504	36.88	937	2.7	1.22	13.3	6.03
6" EHPS	1705-576	35.25	895	3.3	1.50	14.0	6.35
6" SPS	1705-607	35.25	895	4.0	1.81	14.7	6.67
8" EHPS	1705-762	36.88	937	3.3	1.50	13.9	6.30
8" SPS	1705-798	36.88	937	3.4	1.54	14.0	6.35
8" O.D. x 1/2 wall	1705-700	36.88	937	3.2	1.45	13.8	6.26
8" O.D. x 3/8 wall	1705-725	36.88	937	3.2	1.45	13.8	6.26

External, Bolted 345 kV or 500 kV

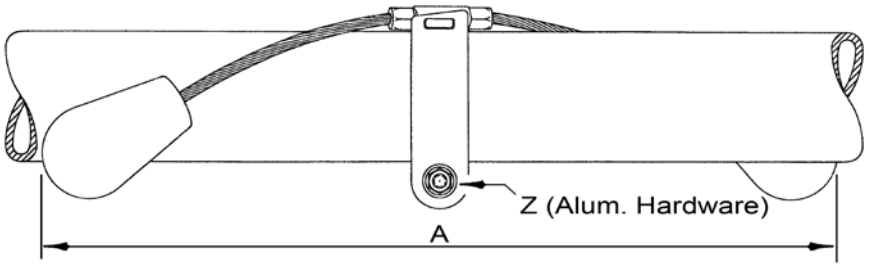

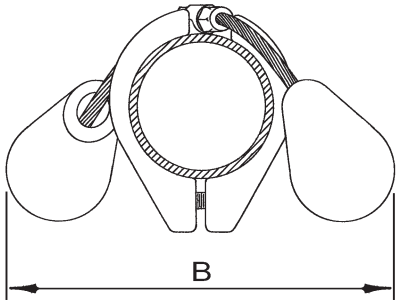

External damper is designed to be corona-free for 345 kV or 500 kV service as noted in table. Damper is designed to be bolted to outside of tube. Damper can be installed during construction or at a later time to correct vibration problems not originally anticipated.

CONDUCTOR SIZE SPS & EHPS	CATALOG NUMBER	DIMENSIONS A		DIMENSIONS B		DIMENSIONS Z	VOLTAGE RATING	NOMINAL WEIGHT ALUMINUM		NOMINAL WEIGHT TOTAL	
		IN	MM	IN	MM			LB	KG	LB	KG
3"	1706-008 EHV	28.0	711	12.6	320	1/2 - 13	345 kV	1.9	0.86	15.6	7.08
3-1/2"	1706-009 EHV	27.8	706	13.2	335	1/2 - 13	345 kV	2.0	0.91	15.7	7.12
4"	1706-010 EHV	27.6	701	13.6	345	1/2 - 13	345 kV	2.1	0.95	15.8	7.17
5"	1706-012 EHV	26.8	681	15.4	391	1/2 - 13	345 kV	2.5	1.13	16.2	7.35
6"	1706-013 EHV	26.2	665	17.8	452	1/2 - 13	345 kV	2.7	1.22	16.4	7.44
8" O.D.	1706-014 EHV	24.8	630	18.6	472	1/2 - 13	500 kV	3.9	1.77	17.6	7.98

© 2011, AFL, all rights reserved. PP-3-00259, Revision 6, 3.29.2023
Specifications are subject to change without notice.

External Bus Vibration Damper for Tubular Bus
Recommended for Voltages up to 756 kV

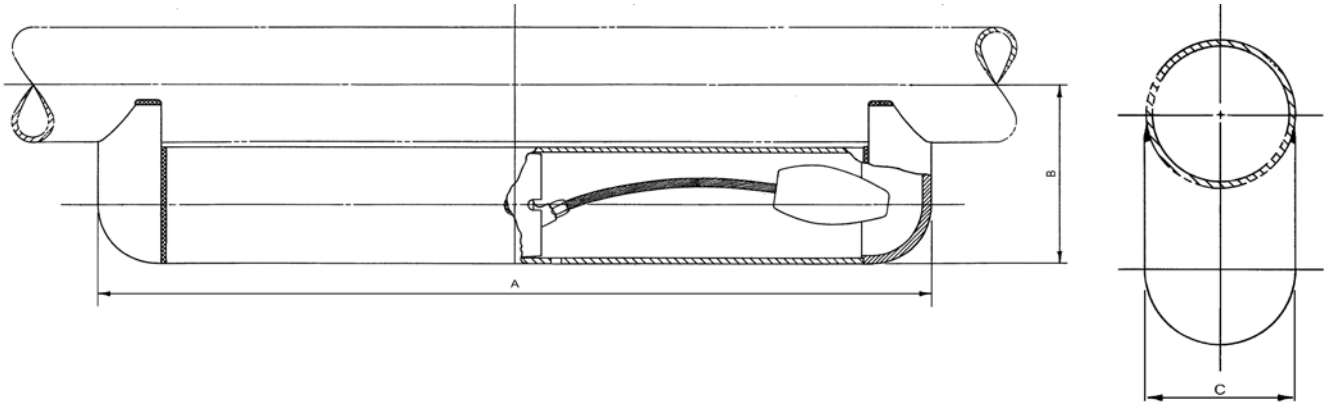

External damper is designed to be corona-free for 765 kV operation. Damper is designed to be welded to outside of bus in order to correct vibration problems not originally anticipated.

Ordering Information: Contact AFL Technical Support for appropriate part number for this application.

Assembly Dwg. & Letter	Conductor Size		Dimension						Nominal Weight			
	Tubular Bus		A		B		C		Aluminum		Total	
	SPS & EHPS or O.D.	mm (O.D. Ref.)	in	mm	in	mm	in	mm	lb	kg	lb	kg
B7384-A	5″	141.3	40.0	1016	8.50	216	5.56	141	23.9	10.84	34.5	15.65
B7384-B	6″	168.3	40.0	1016	10.12	257	6.62	168	28.9	13.11	39.5	17.92
B7384-C	8″ O.D.	203.2	40.0	1016	12.19	310	8.00	203	37.4	16.96	48.0	21.77

© 2011, AFL, all rights reserved. PP-3-00259, Revision 6, 3.29.2023
Specifications are subject to change without notice.

Bus Vibration Test Data

Table 1 and Figures 1 thru 3 provide information on test conducted on an outdoor test span on 4,5 and 6 inch NPS.

Figure 1 illustrates the effect of conventional support vs. wire supports on the vibration amplitude of 4 inch tubular bus in a 50 foot span. The supporting arrangement does have some effect on the vibration amplitudes.

The test conducted on the 4 and 5 inch schedule 40 aluminum bus (ref. figures 2 and 3) were conducted on the spans supported by steel wires to eliminate the support "variable" and to provide the severest condition for the bus damper tests. These tests indicate that one Cat. 1706 external bus dampers reduced the vibration amplitude to a level considered safe for the bus.

Tests were conducted at the outdoor vibration lab at Massena and represent values which eliminate such variations such as bus support type, insulator type and structure type. The spans are supported by wire loops at each end and therefore the test conducted on the dampers are extremely severe in relationship to that which would actually be encountered by any substation where there would be structural damping through the insulator supports, etc.

Table 1

NPS Size	Span Length (feet)	Frequency in Cycles Per Second	Amplitude (inches)	
			Undamped	Damped
One Loop				
4" Sched 80	46	1.5	4.1	0.660
6" Sched 40	68	1.1	6.5	2.100
Two Loop				
4" Sched 80	46	6.1	2.0	0.045
6" Sched 40	68	4.0	2.2	0.050
Three Loop				
4" Sched 80	46	—	—	—
6" Sched 40	68	10.0	0.25	0.020

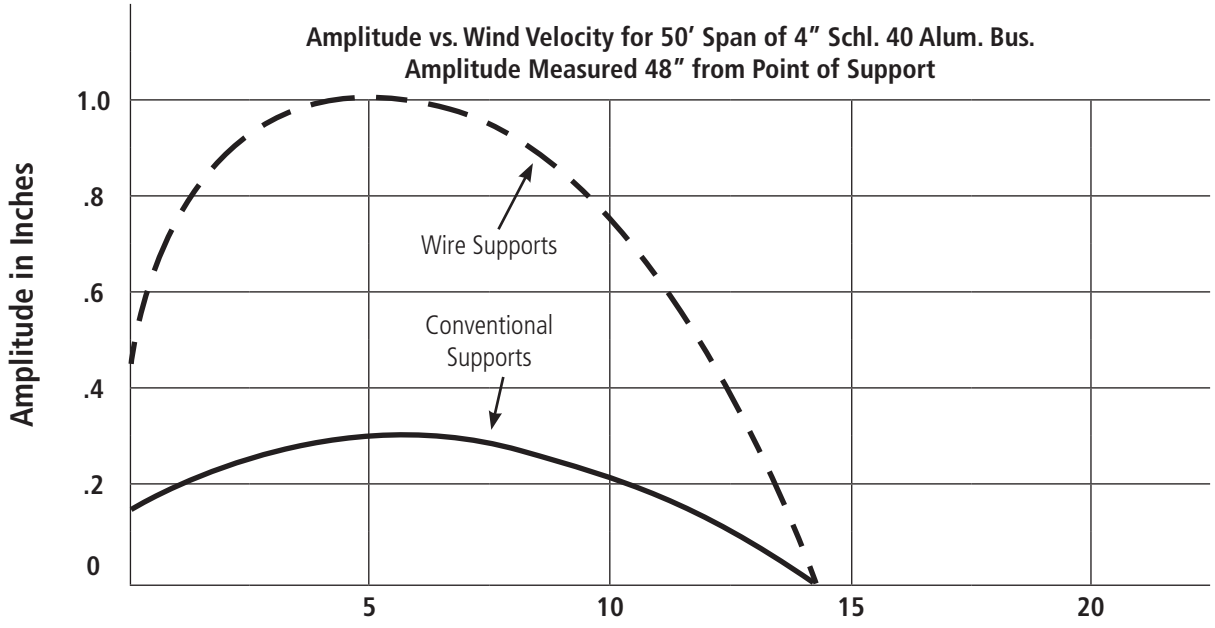

Figure 1 — Effective Wind Velocity - MPH

© 2011, AFL, all rights reserved. PP-3-00259, Revision 6, 3.29.2023
Specifications are subject to change without notice.

Bus Vibration Test Data (cont.)

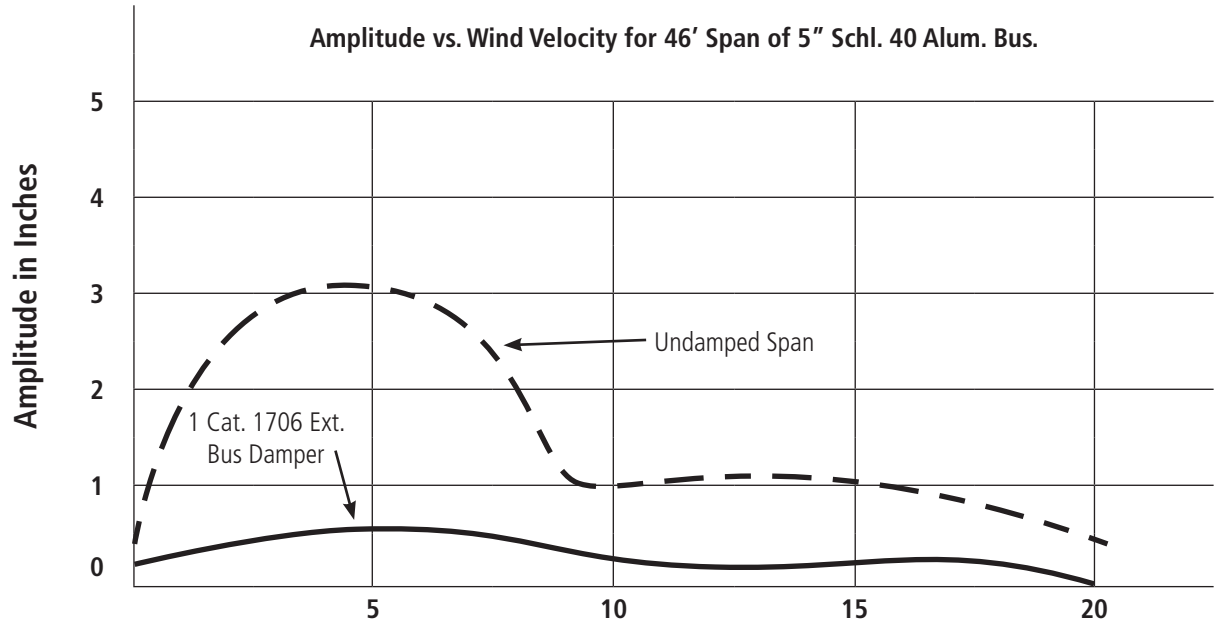

Figure 2 — Effective Wind Velocity - MPH

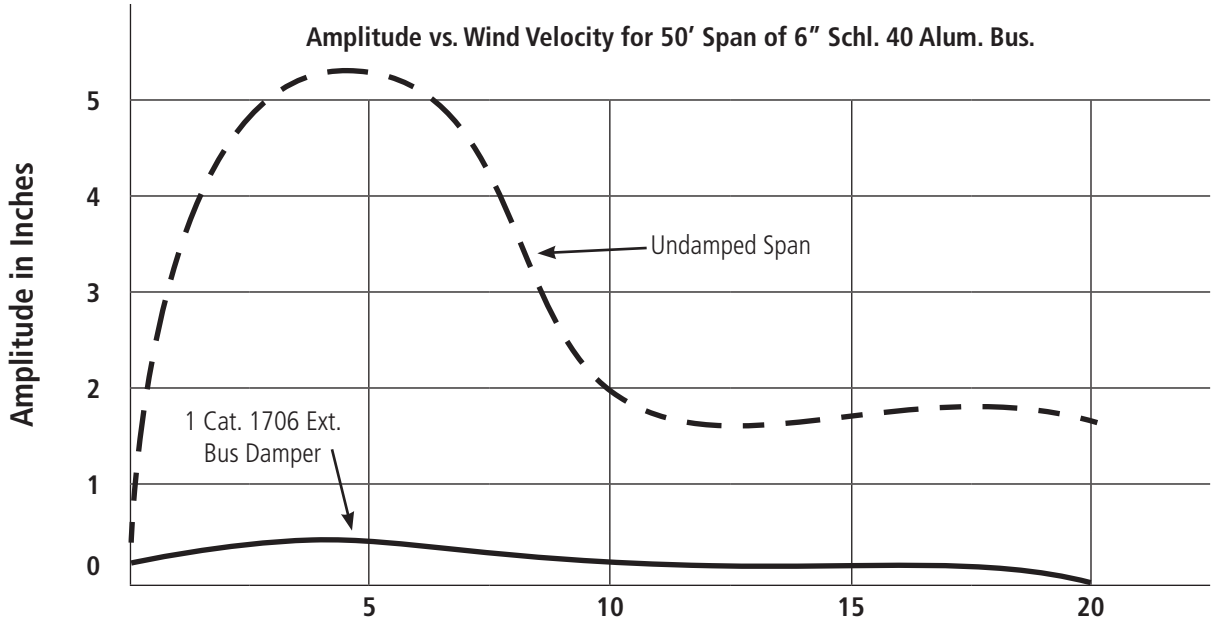

Figure 3 — Effective Wind Velocity - MPH

© 2011, AFL, all rights reserved. PP-3-00259, Revision 6, 3.29.2023
Specifications are subject to change without notice.

Table of Contents

Compounds

Compounds Table of Contents 681
Compounds Photo Index 682
AFL No. 2 Electrical Joint Compound (No. 2 EJC) 683
Alnox® Electrical Joint Compound 684
AFL Filler Compound 685
HiTemp® Universal Compound (HiTUC) 686

© 2011, AFL, all rights reserved. PP-3-00247, Revision 8, 3.30.2023
Specifications are subject to change without notice.

Photo Index

Compounds	
	AFL No. 2 Electrical Joint Compound (No. 2 EJC)
	PG. 683
	Alnox® Electrical Joint Compound
	PG. 684
	AFL Filler Compound
	PG. 685
	HiTemp® Universal Compound (HiTUC)
	PG. 686

© 2011, AFL, all rights reserved. PP-3-00247, Revision 8, 3.30.2023
Specifications are subject to change without notice.



AFL No. 2 Electrical Joint Compound

(No. 2 EJC)

AFL No. 2 Electrical Joint Compound (EJC) is the recommended compound providing efficient and trouble free service on aluminum to aluminum and aluminum to copper connections. If No. 2 EJC is kept in a dry place, it has an infinite shelf life.

Application

Terminal to dead end connections for applications under 93° C (200° F). Flat to flat surfaces such as bus to bus, aluminum to aluminum and aluminum to copper.

Features

Lowest Electrical Resistance on Flat Surfaces

No. 2 EJC has the lowest electrical reistance on flat surfaces because it is a grease type medium that dissolves the oxide on connectors. The nature of the oxide removal is not harmful. Unlike other compounds of its kind, No. 2 EJC creates a light surface etch with no deep, localized attack. It only attacks the oxide.

Weather Resistant

No. 2 EJC adheres to pad surfaces, protecting the connection against the harmful effects of the environment.

Proven Performance

Years of service and laboratory testing have proven that AFL No. 2 EJC provides efficient and trouble free service.

Ordering Information

CATALOG NUMBER	PACKAGING
EJC10T	Carton of 10 - 7.94 oz (225 g) tubes
EJC12CAN	Carton of 12 - 1 lb. (0.45 kg) cans
EJC1GAL	1 Gallon Pail, 10 lbs. (4.5 kg)
EJC5GAL	5 Gallon Pail, 50 lbs. (22.7 kg)

For more information, contact the AFL Technical Support Team at 1.800.866.7385.

© 2011, AFL, all rights reserved. PP-3-00210, Revision 1, 5.2.14
Specifications are subject to change without notice.

Alnox® Electrical Joint Compound



Application

Pad to pad connections where the operating temperatures are at or below 250 ºC (482 ºF).
Used for aluminum on aluminum, copper on aluminum, and copper on copper.
Ex: Dead ends to terminals, terminals to tee taps

Features

Lowest Electrical Resistance

Alnox® contains extremely hard metalic particles with sharp and irregular shapes of carefully controlled grain size. This forms many metal to metal contact points for low resistance connections. If Alnox is kept in a dry place, it has an infinite shelf life.

Weather Resistant

Alnox® adheres to pad surfaces, protecting the connection against the harmful effects of the environment.

Wide Temperature Tolerance

Alnox® has a wide temperature tolerance. It is workable at low temperatures, -18 ºC (0 ºF), and does not drip at high temperatures. It has a melting point above 288 ºC (550 ºF).

Ordering Information

CATALOG NUMBER	PACKAGING
ALNOX10T	Carton of 10 - 8.82 oz (250 g) tubes
ALNOX12CAN	Carton of 12 - 1 lb. (0.45 kg) cans
ALNOX1GAL	1 Gallon Pail, 10 lbs. (4.5 kg)
ALNOX5GAL	5 Gallon Pail, 50 lbs. (22.7 kg)

For more information, contact the AFL Technical Support Team at 1.800.866.7385.

© 2011, AFL, all rights reserved. PP-3-00214, Revision 0, 3.22.11
Specifications are subject to change without notice.



AFL Filler Compound

AFL Filler Compound (AFC) improves the mechanical holding strength and conductivity of compression fittings. Stored in a dry environment, AFC has an infinite shelf life.

Application

Filler compound for compression accessories operating at temperatures up to 180ºC (355ºF). Example: dead ends, compression joints, terminals and jumper connectors.

Features

Wide Temperature Tolerance

AFC is stiff but workable at low temperatures. To improve the workability, AFC can be diluted with 5% kerosene (by weight).

Improves Holding Strength and Conductivity

AFC contains hard, metallic particles (grit). During compression, the grit is embedded between the conductor and the accessory, creating an irregular surface which provides two benefits: (1) increases the holding strength when tension is applied and (2) improves conductivity by breaking the oxide layer on bare metal to metal connections.

Weather Resistant

AFC is forced between the conductor strands during compression, filling voids and sealing out the harmful effects of air and moisture

Fits Standard Caulking Gun

For easy filling of compression accessories, AFC is available in a tube that fits a standard caulking gun.

Visible Fill Line

AFL is the only supplier that features a visible fill line along the length of the cartridge which allows the user to visually check the fullness of the tube.

Ordering Information

AFL NO.	PACKAGING
AFC10T	Carton of 10, 1 lb. (451 g) Tubes - Fits Standard Caulking Gun
AFC1GAL	1 Gallon Pail, 11 lbs. (5 kg)
AFC5GAL	5 Gallon Pail, 55 lbs. (25 kg)

For more information, contact the AFL Technical Support Team at 1.800.866.7385.

© 2003, AFL, all rights reserved. PP-3-00209, Revision 3, 7.18.12
Specifications are subject to change without notice.





HiTemp® Universal Compound (HiTUC) for Filler and Pad-to-Pad Connections

AFL's HiTemp Universal Compound (HiTUC) is the recommended inhibitor as a filler for compression fittings, as well as a joint compound for pad-to-pad connections for the increased temperature requirements in today's Utility market.

It has been designed to withstand the increased operating temperatures of high temperature/low sag conductors (ACSS, ACCR, etc.). If kept in a dry place, HiTUC has a three-year shelf life.

Features

Low Electrical Resistance

HiTUC contains extremely hard metallic particles with sharp and irregular shapes of carefully controlled grain size. This forms many metal to metal contact points for low contact resistance.

Wide Temperature Tolerance

HiTUC has a wide temperature range. It is workable at low temperatures -40°C (-40°F) and does not drip at high temperatures. It has a melting point above 250ºC (482ºF).

Improves Current Flow

During compression, the metallic particles (grit) contained in HiTUC are embedded between the conductor and the inside wall of the accessory, creating an irregular surface. This irregular surface improves conductivity by forming more metal to metal connections. The grit also acts as a wire brush on the aluminum oxide that has formed on the inside of the tubular accessory. This same grit creates a low resistance connection in bolted pads of dead ends, terminals and tee taps.

Moisture Resistant

As the accessory is compressed, HiTUC is forced between the conductor strands, sealing out the harmful effects of harmful contaminates, water and salt.

Fits Standard Caulking Gun

AFL is the only supplier that features a sight gauge along the length of the tube that allows the user to check the remaining amount. For easy filling of compression accessories, HiTUC fits a standard caulking gun.

Application

- Filler compound and pad-to-pad connections for compression accessories installed on conductors operating at temperatures up to 250ºC (482ºF)
- Dead ends, joints, terminals, tee taps and jumper connectors

Ordering Information

CATALOG NUMBER	PACKAGING
HITUC10T	Carton of 10 Tubes, 1 lb. (451 g)—Fits Standard Caulking Gun
HITUC1GAL	1 Gallon Pail, 11 lbs. (5 kg)
HITUC5GAL	5 Gallon Pail, 55 lbs. (25 kg)
HITUC12B	12 bottles per pack, 8 oz each, 6 lbs. (2721.6 g)

© 2013, AFL, all rights reserved. PP-3-00248, Revision 4, 9.22.2022
Specifications are subject to change without notice.



AFL

www.AFLglobal.com

11.21.2024