TYPE WXBC-AA, WXBC-E-AA

Expansion Support is designed to compensate for expansion and contraction in long bus runs.

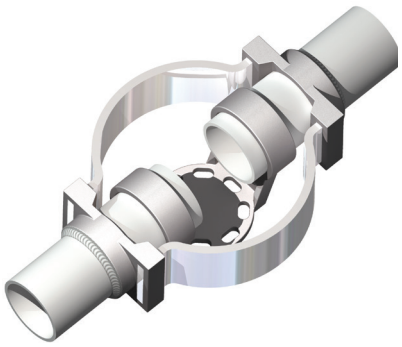

WXBC-AA

Material

Aluminum Alloy

Hardware

Galvanized steel bolts and lockwashers

Notes

- For Welded End Plug, add "-WP" to the catalog number. EX: WXBC400-5-AA-WP
- For Chatter Spring, add "-CH" to the catalog number. EX: WXBC400-5-CH-AA

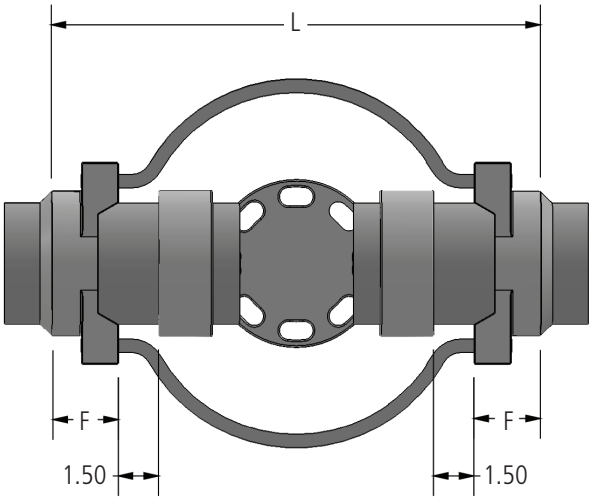

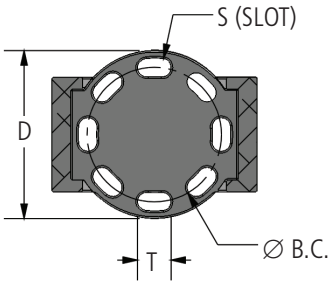

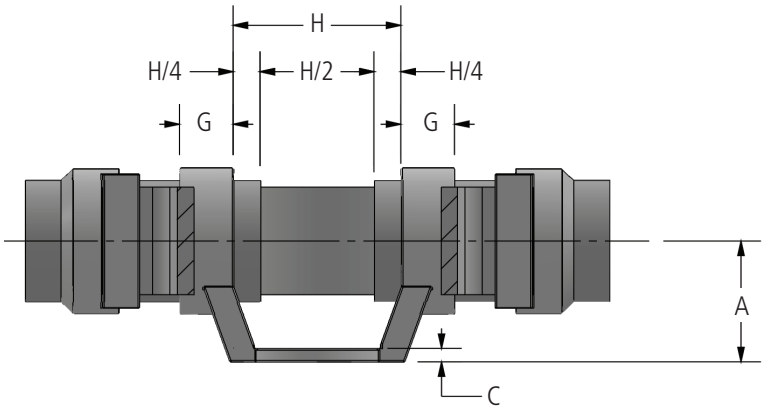

AFL's Dossert® product line offers a wide range of substation accessories in low voltage up to 765 kV applications in bronze or aluminum materials.

continued

© 2010, AFL, all rights reserved. PP-3-00590, Revision 2, 6.23.2026
Specifications are subject to change without notice.

TYPE WXBC-AA, WXBC-E-AA

Ordering Information

Catalog Number		SPS	Dimensions in Inches									
Schedule 40	Schedule 80		A	B.C.	C	D	F	G	H	L	S	T
WXBC100-3-AA	WXBC100E-3-AA	1	2.00	3.00	0.38	4.25	1.50	1.25	4.50	13.00	0.56	0.81
WXBC125-3-AA	WXBC125E-3-AA	1 1/4	2.25	3.00	0.38	4.25	1.50	1.25	4.50	13.00	0.56	0.81
WXBC125-5-AA	WXBC125E-5-AA	1 1/4	2.38	5.00	0.38	6.25	1.50	1.25	6.25	14.75	0.69	1.06
WXBC150-3-AA	WXBC150E-3-AA	1 1/2	2.50	3.00	0.38	4.25	1.75	1.25	4.50	13.50	0.56	0.81
WXBC150-5-AA	WXBC150E-5-AA	1 1/2	2.50	5.00	0.38	6.25	1.75	1.25	6.25	15.25	0.69	1.06
WXBC200-3-AA	WXBC200E-3-AA	2	2.75	3.00	0.38	4.25	2.19	1.25	4.50	14.38	0.56	0.81
WXBC200-5-AA	WXBC200E-5-AA	2	2.75	5.00	0.38	6.25	2.19	1.25	6.25	16.13	0.69	1.06
WXBC200-7-AA	WXBC200E-7-AA	2	2.75	7.00	0.38	8.50	2.19	1.25	8.75	18.75	0.81	1.63
WXBC250-3-AA	WXBC250E-3-AA	2 1/2	3.13	3.00	0.38	4.25	2.19	1.25	4.50	14.38	0.56	0.81
WXBC250-5-AA	WXBC250E-5-AA	2 1/2	3.13	5.00	0.38	6.25	2.19	1.25	6.25	16.13	0.69	1.06
WXBC250-7-AA	WXBC250E-7-AA	2 1/2	3.13	7.00	0.38	8.50	2.19	1.25	8.75	18.75	0.81	1.63
WXBC300-3-AA	WXBC300E-3-AA	3	3.63	3.00	0.44	4.25	2.31	1.63	4.50	14.63	0.56	0.81
WXBC300-5-AA	WXBC300E-5-AA	3	3.63	5.00	0.50	6.25	2.31	1.63	6.50	16.38	0.69	1.06
WXBC300-7-AA	WXBC300E-7-AA	3	3.63	7.00	0.44	8.50	2.31	1.63	8.75	19.75	0.81	1.63
WXBC350-3-AA	WXBC350E-3-AA	3 1/2	4.00	3.00	0.50	4.25	2.31	1.25	4.50	14.63	0.56	0.81
WXBC350-5-AA	WXBC350E-5-AA	3 1/2	4.00	5.00	0.50	6.25	2.25	1.25	7.13	17.13	0.69	1.06
WXBC350-7-AA	WXBC350E-7-AA	3 1/2	4.00	7.00	0.50	6.25	2.25	1.25	8.75	19.75	0.81	1.63
WXBC350-5-S-AA	WXBC350E-5-S-AA	3 1/2	5.00	5.00	0.50	6.25	2.25	1.25	7.13	17.13	0.69	1.06
WXBC400-3-AA	WXBC400E-3-AA	4	4.50	3.00	0.50	4.25	2.50	2.00	4.50	15.50	0.56	0.81
WXBC400-5-AA	WXBC400E-5-AA	4	4.50	5.00	0.50	6.25	2.50	2.00	6.25	17.25	0.69	1.06
WXBC400-7-AA	WXBC400E-7-AA	4	4.50	7.00	0.50	8.50	2.50	2.00	8.75	20.50	0.81	1.63
WXBC500-3-AA	WXBC500E-3-AA	5	5.00	3.00	0.50	4.25	2.50	2.00	4.50	15.50	0.56	0.81
WXBC500-5-AA	WXBC500E-5-AA	5	5.00	5.00	0.50	6.25	2.50	2.00	6.25	18.25	0.69	1.06
WXBC500-7-AA	WXBC500E-7-AA	5	5.00	7.00	0.63	8.50	2.50	2.00	8.75	19.75	0.81	1.63
WXBC500-5-S-AA	WXBC500E-5-S-AA	5	4.88	5.00	0.50	6.25	2.50	2.00	6.25	17.25	0.69	1.06
WXBC600-3-AA	WXBC600E-3-AA	6	5.50	3.00	0.50	4.25	2.50	2.00	4.50	15.50	0.56	0.81
WXBC600-5-AA	WXBC600E-5-AA	6	5.50	5.00	0.50	6.25	2.50	2.00	6.25	19.75	0.69	1.06
WXBC600-7-AA	WXBC600E-7-AA	6	5.50	7.00	0.63	8.50	25.50	2.00	8.75	22.75	0.81	1.63
WXBC800R-5-AA	—	8 OD	6.38	5.00	0.50	6.25	2.50	2.00	6.38	18.38	0.69	1.25
WXBC800R-7-AA	—	8 OD	6.38	7.00	0.63	8.50	3.00	2.00	8.50	21.50	0.81	1.63
WXBC800-5-AA	WXBC800E-5-AA	8	6.89	5.00	0.50	6.25	2.50	2.00	6.25	18.25	0.69	1.25

© 2010, AFL, all rights reserved. PP-3-00590, Revision 2, 6.23.2026
Specifications are subject to change without notice.

AFL
AFLglobal.com/contact
Sales & Support