TYPE PSC-AA

Pipe Bus Support Coupler



A bus support coupler for joining and supporting two tubular buses on a post type insulator. Designed for a high resistance to impact or sustained cantilever and torsional stresses. Nuts and bolts are furnished for base mounting.

Material

Aluminum Alloy

Hardware

Yellow anodized aluminum bolts, nuts, and lockwashers.

Note

For base mounting dimensions and hardware see page 3 in the general catalog index.

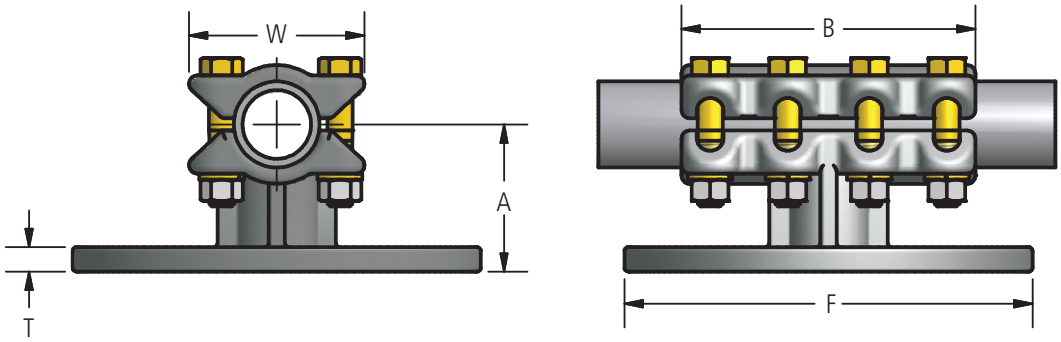

Ordering Information

CATALOG NUMBER	SPS	BOLT CIRCLE	DIMENSIONS IN INCHES					
			A	B	F	T	W	BOLT SIZE
PSC50-3-AA	1/2	3	1 3/4	5 1/4	4 1/4	3/8	2 3/4	1/2
PSC50-5-AA	1/2	5	2 1/8	5 1/4	6 1/4	3/8	2 3/4	1/2
PSC75-3-AA	3/4	3	2	5 3/4	4 1/4	3/8	2 13/16	1/2
PSC75-5-AA	3/4	5	2 1/4	5 3/4	6 1/4	3/8	2 13/16	1/2
PSC100-3-AA	1	3	2	5 3/4	4 1/4	3/8	3 1/16	1/2
PSC100-5-AA	1	5	2 1/4	5 3/4	6 1/4	3/8	3 1/16	1/2
PSC125-3-AA	1 1/4	3	2 1/4	6 1/4	4 1/4	3/8	3 13/32	1/2
PSC125-5-AA	1 1/4	5	2 3/8	6 1/4	6 1/4	3/8	3 13/32	1/2
PSC150-3-AA	1 1/2	3	2 1/2	6 1/4	4 1/4	3/8	4 5/16	1/2
PSC150-5-AA	1 1/2	5	2 1/2	6 1/4	6 1/4	3/8	4 5/16	1/2
PSC200-3-AA	2	3	2 3/4	6 3/4	4 1/4	3/8	4 1/4	1/2
PSC200-5-AA	2	5	2 3/4	6 3/4	6 1/4	3/8	4 1/4	1/2
PSC250-3-AA	2 1/2	3	3 1/8	6 3/4	4 1/4	3/8	4 5/8	1/2
PSC250-5-AA	2 1/2	5	3 1/8	6 3/4	6 1/4	3/8	4 5/8	1/2
PSC300-3-AA	3	3	3 5/8	7 1/4	4 1/4	3/8	5 1/2	5/8
PSC300-5-AA	3	5	3 5/8	7 1/4	6 1/4	3/8	5 1/2	5/8
PSC350-3-AA	3 1/2	3	4	7 1/4	4 1/4	7/16	6	5/8
PSC350-5-AA	3 1/2	5	4	7 1/4	6 1/4	7/16	6	5/8
PSC400-3-AA	4	3	4 1/2	7 1/4	4 1/4	7/16	6 1/2	5/8
PSC400-5-AA	4	5	4 1/2	7 1/4	6 1/4	7/16	6 1/2	5/8

AFL's Dossert® product line offers a wide range of substation accessories in low voltage up to 765 kV applications in bronze or aluminum materials.

© 2011, AFL, all rights reserved. PP-3-00403, Rev 1, 9.26.2025
Specifications are subject to change without notice.