TYPE PSDCS-AA



Bus Support, Pipe, Slide or Tight Fit

The bus support is supplied with chatter springs to reduce chatter. The support can be used as a sliding support or fixed support.

Material

Aluminum Alloy

Hardware

Yellow anodized aluminum nuts, bolts and lockwashers. Galvanized steel mounting hardware included.

Note

For base mounting dimensions and hardware see page 3 in the general catalog index.

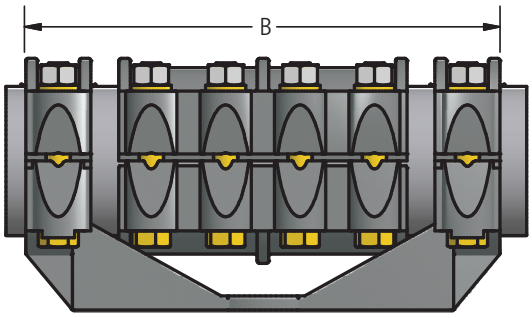

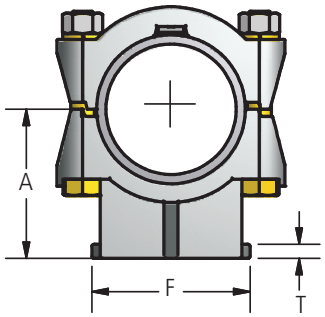

AFL's Dossert® product line offers a wide range of substation accessories in low voltage up to 765 kV applications in bronze or aluminum materials.

Ordering Information

CATALOG NUMBER	SPS	BOLT CIRCLE	DIMENSIONS IN INCHES				
			A	B	F	T	BOLT SIZE
PSDCS75-3-AA	3/4	3	2	6 3/4	4 1/4	3/8	1/2
PSDCS75-5-AA	3/4	5	2 1/4	9	6 1/4	3/8	1/2
PSDCS100-3-AA	1	3	2	7	4 1/4	3/8	1/2
PSDCS100-5-AA	1	5	2 1/4	7 1/4	6 1/4	3/8	1/2
PSDCS125-3-AA	1 1/4	3	2 1/4	7 1/4	4 1/4	3/8	1/2
PSDCS125-5-AA	1 1/4	5	2 3/8	9 1/2	6 1/4	3/8	1/2
PSDCS150-3-AA	1 1/2	3	2 1/2	7 1/4	4 1/4	3/8	1/2
PSDCS150-5-AA	1 1/2	5	2 1/2	9 1/2	6 1/4	3/8	1/2
PSDCS200-3-AA	2	3	2 3/4	7 1/4	4 1/4	3/8	1/2
PSDCS200-5-AA	2	5	2 3/4	9 1/2	6 1/4	3/8	1/2
PSDCS250-3-AA	2 1/2	3	3 1/8	7 3/4	4 1/4	3/8	1/2
PSDCS250-5-AA	2 1/2	5	3 1/8	10	6 1/4	3/8	1/2
PSDCS300-3-AA	3	3	3 5/8	7 3/4	4 1/4	3/8	5/8
PSDCS300-5-AA	3	5	3 5/8	10	6 1/4	3/8	5/8
PSDCS300-7-AA	3	7	3 5/8	12 1/4	8 1/2	1/2	5/8
PSDCS350-3-AA	3 1/2	3	4	7 3/4	4 1/4	3/8	5/8
PSDCS350-5-AA	3 1/2	5	4	10	6 1/4	3/8	5/8
PSDCS350-7-AA	3 1/2	7	4	12 1/4	8 1/2	1/2	5/8
PSDCS400-3-AA	4	3	4 1/2	7 3/4	4 1/4	1/2	5/8
PSDCS400-5-AA	4	5	4 1/2	10	6 1/4	1/2	5/8
PSDCS400-7-AA	4	7	4 1/2	12 1/4	8 1/2	1/2	5/8
PSDCS500-3-AA	5	3	5	8 1/4	4 1/4	1/2	5/8
PSDCS500-5-AA	5	5	5	10 1/2	6 1/4	1/2	5/8
PSDCS500-7-AA	5	7	5	12 3/4	8 1/2	5/8	5/8
PSDCS600-3-AA	6	3	5 1/2	7 3/4	4 1/4	1/2	5/8
PSDCS600-5-AA	6	5	5 1/2	10	6 1/4	1/2	5/8
PSDCS600-7-AA	6	7	5 1/2	12 1/4	8 1/2	1/2	5/8

© 2011, AFL, all rights reserved. PP-3-00407, Rev 1, 9.26.2025
Specifications are subject to change without notice.