THIS DRAWING AND ALL INFORMATION ON IT IS THE PROPERTY OF AFL. IT IS CONFIDENTIAL AND IT IS GIVEN TO YOU FOR A LIMITED PURPOSE AND MUST BE RETURNED UPON REQUEST. NEITHER THIS DRAWING OR ANY PART OF IT NOR ANY INFORMATION CONCERNING IT MAY BE COPIED, EXHIBITED, OR FURNISHED TO OTHERS NOR PHOTOGRAPHS TAKEN OF ANY ARTICLE FABRICATED OR ASSEMBLED FROM THE DRAWING WITHOUT THE CONSENT OF AFL.

ITEM NO:

DWG. NO:

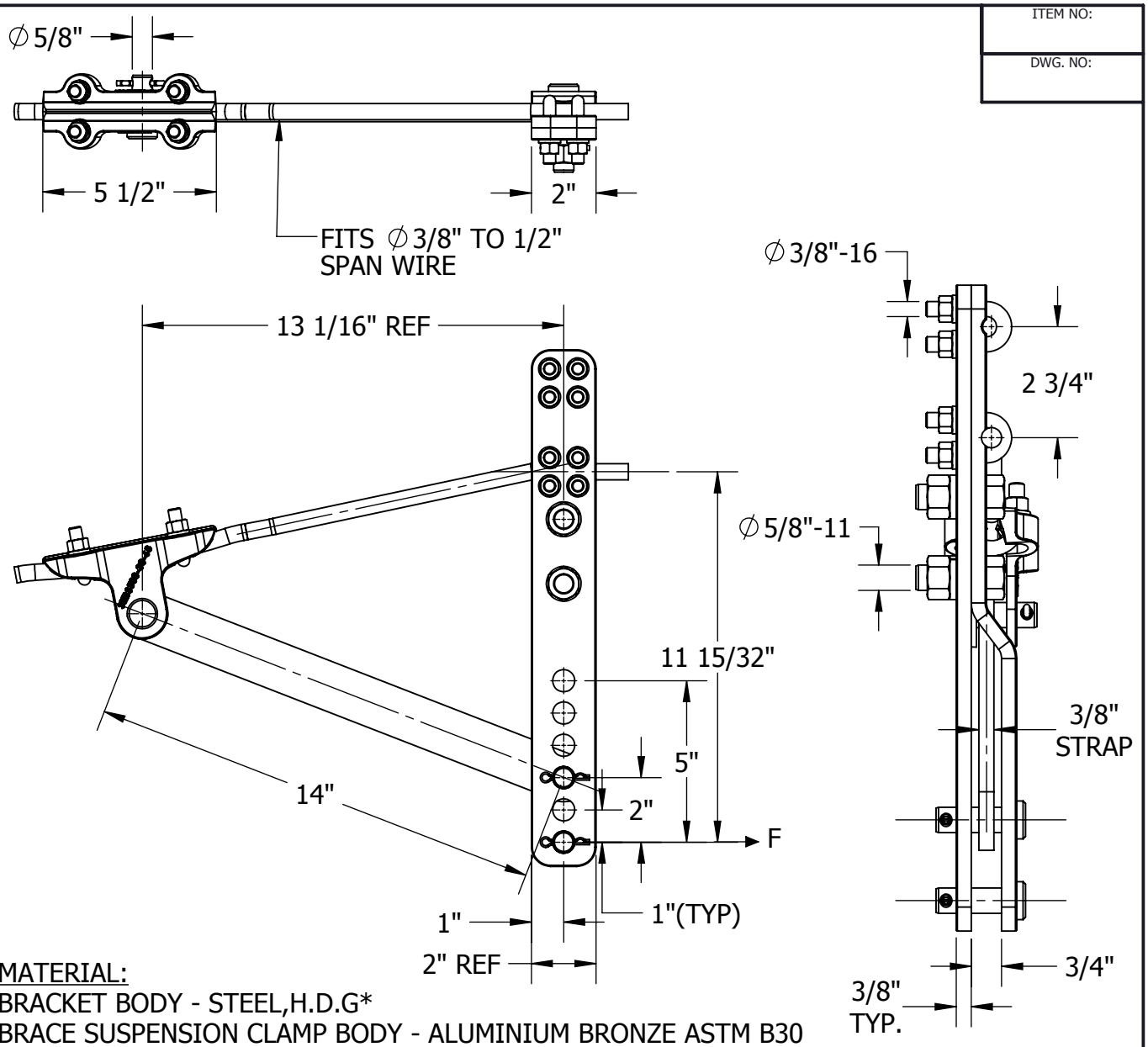

MATERIAL:

BRACKET BODY - STEEL,H.D.G*
BRACE SUSPENSION CLAMP BODY - ALUMINIUM BRONZE ASTM B30
U-BOLTS,NUTS & LOCKWASHERS - SILICON BRONZE
STRAP - ALUMINIUM ALLOY ASTM B221
CLEVIS PIN- STEEL, H.D.G*
BOLTS, U-BOLTS, LOCKWASHERS & COTTER PINS - STAINLESS STEEL

MECHANICAL RATINGS:

MIN.ULTIMATE STRENGTH: 3750LBS
WORKING LOAD WITH BACKSTAY (F): 1500LBS

BOLT SIZES	WRENCH/ SOCKET SIZES	TORQUE VALUES (FT-LBS)
3/8-16	9/16 HEX	23
1/2-13	3/4 HEX	55

WT: 11.03 LB

* = HOT DIP GALVANIZED

LOCATION	CONTRACT NO	CUST / CONTR

REVISIONS

REV	DESCRIPTION	DATE	BY	APR

DRN BY: HV
DRN DATE: 5.28.14
CHK BY: JL
CHK DATE: 5.28.14
PA 2017.270.0

AFL DOSSERT®

CLAMP, SPAN WIRE 7/16", DROP OF 11-15/32", HDG

REV 0 | PART NO: DWAS44GS-63-A01 | 1 OF 1